AUTHENTICATED
U.S. GOVERNMENT
INFORMATION
GPO

Section 1.6038A–3 also issued under 26 U.S.C. 6038A and 7701(l).
Section 1.6038A–4 also issued under 26 U.S.C. 6038A.
Section 1.6038A–5 also issued under 26 U.S.C. 6038A.
Section 1.6038A–6 also issued under 26 U.S.C. 6038A.
Section 1.6038A–7 also issued under 26 U.S.C. 6038A.
Section 1.6038B–1 also issued under 26 U.S.C. 6038B.
Section 1.6038B–1T also issued under 26 U.S.C 6038B.
Section 1.6038B–2 also issued under 26 U.S.C. 6038B.
Section 1.6041–2T also issued under 26 U.S.C. 6041(d).
Section 1.6041–3 also issued under 26 U.S.C. 62 and 6041(a).
Section 1.6042–3 also issued under 26 U.S.C. 6045.
Section 1.6045–1 also issued under 26 U.S.C. 6045.
Section 1.6045–2 also issued under 26 U.S.C. 6045.
Section 1.6045–4 also issued under 26 U.S.C. 6045.
Section 1.6049–4 also issued under 26 U.S.C. 6049 (a), (b), and (d).
Section 1.6049–5 also issued under 26 U.S.C. 6049 (a), (b), and (d).
Section 1.6049–5T also issued under 26 U.S.C. 6049.
Section 1.6049–6 also issued under 6049(a), (b), and (d).
Section 1.6049–7 also issued under 26 U.S.C. 860G(e), 1275(c) and 26 U.S.C. 6049(d)(7)(D).
Section 1.6046A–1 also issued under 26 U.S.C. 6046A.
Section 1.6050E–1 also issued under 26 U.S.C. 6050E.
Section 1.6050H–1 also issued under 26 U.S.C. 6050H.
Section 1.6050H–1T also issued under 26 U.S.C. 6050H.
Section 1.6050H–2 also issued under 26 U.S.C. 6050H.
Section 1.6050I–1 also issued under 26 U.S.C. 6050I.
Section 1.6050I–2 also issued under 26 U.S.C. 6050I.
Section 1.6050K–1 also issued under 26 U.S.C. 6050K.
Section 1.6050M–1 also issued under 26 U.S.C. 6050M.
Section 1.6050P–1 also issued under 26 U.S.C. 6050P.
Section 1.6050S–1T also issued under 26 U.S.C. 6050S(g).
Section 1.6050S–2T also issued under 26 U.S.C. 6050S(g).
Section 1.6061–2T also issued under 26 U.S.C. 6061.
Section 1.6065–2T also issued under 26 U.S.C. 6065.
Section 1.6081–2 also issued under 26 U.S.C. 6081(a).
Section 1.6081–4 also issued under 26 U.S.C. 6081(a).
Section 1.6081–6 also issued under 26 U.S.C. 6081(a).
Section 1.6081–7 also issued under 26 U.S.C. 6081(a).
Section 1.6302–1 also issued under 26 U.S.C. 6302(c) and (h).
Section 1.6302–2 also issued under 26 U.S.C. 6302(h).
Section 1.6302–3 also issued under 26 U.S.C. 6302(h).
Section 1.6302–4 also issued under 26 U.S.C. 6302(a), (c), and (h).
Section 1.6411–4 also issued under 26 U.S.C. 6402(i) and 6411(c).
Section 1.6662–6 also issued under 26 U.S.C. 6662.
Section 1.6695–1 also issued under 26 U.S.C. 6060(b) and 6695(b).
Section 1.6695–2 also issued under 26 U.S.C. 6695(g).
Section 1.6851–2 also issued under 26 U.S.C 6851(d).
Section 1.7520–1 also issued under 26 U.S.C. 7520(c)(2).
Section 1.7520–2 also issued under 26 U.S.C. 7520(c)(2).
Section 1.7520–3 also issued under 26 U.S.C. 7520(c)(2).
Section 1.7520–4 also issued under 26 U.S.C. 7520(c)(2).
Section 1.7701(l)–1 also issued under 26 U.S.C. 7701(l).
Section 1.7701(l)–3 also issued under 26 U.S.C. 7701(l).
Section 1.7872–5T also issued under 26 U.S.C. 7872.

TAX ON SELF-EMPLOYMENT INCOME

SOURCE: Sections 1.1401–1 to 1.1403–1 contained in T.D. 6691, 28 FR 12796, Dec. 3, 1963, unless otherwise noted.

§ 1.1401–1 Tax on self-employment income.

(a) There is imposed, in addition to other taxes, a tax upon the self-employment income of every individual at the rates prescribed in section 1401(a) (old-age, survivors, and disability insurance) and (b) (hospital insurance). (See subparagraphs (1) and (2) of paragraph (b) of this section.) This tax shall be levied, assessed, and collected as part of the income tax imposed by subtitle A of the Code and, except as otherwise expressly provided, will be included with the tax imposed by section

1 or 3 in computing any deficiency or overpayment and in computing the interest and additions to any deficiency, overpayment, or tax. Since the tax on self-employment income is part of the income tax, it is subject to the jurisdiction of the Tax Court of the United States to the same extent and in the same manner as the other taxes under subtitle A of the Code. Furthermore, with respect to taxable years beginning after December 31, 1966, this tax must be taken into account in computing any estimate of the taxes required to be declared under section 6015.

(b) The rates of tax on self-employment income are as follows:

(1) For old-age, survivors, and disability insurance:

Taxable year	*Percent*
Beginning before January 1, 1957	3
Beginning after December 31, 1956 and before January 1, 1959	3.375
Beginning after December 31, 1958 and before January 1, 1960	3.75
Beginning after December 31, 1959 and before January 1, 1962	4.5
Beginning after December 31, 1961 and before January 1, 1963	4.7
Beginning after December 31, 1962 and before January 1, 1966	5.4
Beginning after December 31, 1965 and before January 1, 1967	5.8
Beginning after December 31, 1966 and before January 1, 1968	5.9
Beginning after December 31, 1967 and before January 1, 1969	5.8
Beginning after December 31, 1968 and before January 1, 1971	6.3
Beginning after December 31, 1970 and before January 1, 1973	6.9
Beginning after December 31, 1972	7.0

(2) For hospital insurance:

Taxable year	*Percent*
Beginning after December 31, 1965 and before January 1, 1967	0.35
Beginning after December 31, 1966 and before January 1, 1968	.50
Beginning after December 31, 1967 and before January 1, 1973	.60
Beginning after December 31, 1972 and before January 1, 1974	1.0
Beginning after December 31, 1973 and before January 1, 1978	.90
Beginning after December 31, 1977 and before January 1, 1981	1.10
Beginning after December 31, 1980 and before January 1, 1986	1.35
Beginning after December 31, 1985	1.50

(c) In general, self-employment income consists of the net earnings derived by an individual (other than a nonresident alien) from a trade or business carried on by him as sole proprietor or by a partnership of which he is a member, including the net earnings of certain employees as set forth in § 1.1402(c)–3, and of crew leaders, as defined in section 3121(o) (see such section and the regulations thereunder in part 31 of this chapter (Employment Tax Regulations)). See, however, the exclusions, exceptions, and limitations set forth in §§ 1.1402(a)–1 through 1.1402(h)–1.

[T.D. 6993, 34 FR 828, Jan. 18, 1969, as amended by T.D. 7333, 39 FR 44445, Dec. 24, 1974]

§ 1.1402(a)–1 Definition of net earnings from self-employment.

(a) Subject to the special rules set forth in §§ 1.1402(a)–3 to 1.1402(a)–17, inclusive, and to the exclusions set forth in §§ 1.1402(c)–2 to 1.1402(c)–7, inclusive, the term ''net earnings from self-employment'' means:

(1) The gross income derived by an individual from any trade or business carried on by such individual, less the deductions allowed by chapter 1 of the Code which are attributable to such trade or business, plus

(2) His distributive share (whether or not distributed), as determined under section 704, of the income (or minus the loss), described in section 702(a)(9) and as computed under section 703, from any trade or business carried on by any partnership of which he is a member.

(b) Gross income derived by an individual from a trade or business includes payments received by him from a partnership of which he is a member for services rendered to the partnership or for the use of capital by the partnership, to the extent the payments are determined without regard to the income of the partnership. However, such payments received from a partnership not engaged in a trade or business within the meaning of section 1402(c) and § 1.1402(c)–1 do not constitute gross income derived by an individual from a trade or business. See section 707(c) and the regulations thereunder, relating to guaranteed payments to a member of a partnership for services or the use of capital. See also section 706(a) and the regulations thereunder, relating to the taxable year of the partner in which such guaranteed payments are to be included in computing taxable income.

(c) Gross income derived by an individual from a trade or business includes gross income received (in the case of an individual reporting income on the cash receipts and disbursements method) or accrued (in the case of an individual reporting income on the accrual method) in the taxable year from a trade or business even though such income may be attributable in whole or in part to services rendered or other acts performed in a prior taxable year as to which the individual was not subject to the tax on self-employment income.

[T.D. 6691, 28 FR 12796, Dec. 3, 1963, as amended by T.D. 7333, 39 FR 44445, Dec. 24, 1974]

§ 1.1402(a)–2 Computation of net earnings from self-employment.

(a) *General rule.* In general, the gross income and deductions of an individual attributable to a trade or business (including a trade or business conducted by an employee referred to in paragraphs (b), (c), (d), or (e) of § 1.1402(c)–3), for the purpose of ascertaining his net earnings from self-employment, are to be determined by reference to the provisions of law and regulations applicable with respect to the taxes imposed by sections 1 and 3. Thus, if an individual uses the accrual method of accounting in computing taxable income from a trade or business for the purpose of the tax imposed by section 1 or 3, he must use the same method in determining net earnings from self-employment. Likewise, if a taxpayer engaged in a trade or business of selling property on the installment plan elects, under the provisions of section 453, to use the installment method in computing income for purposes of the tax under section 1 or 3, he must use the same method in determining net earnings from self-employment. Income which is excludable from gross income under any provision of subtitle A of the Internal Revenue Code is not taken into account in determining net earnings from self-employment except as otherwise provided in § 1.1402(a)–9, relating to certain residents of Puerto Rico, in § 1.1402(a)–11, relating to ministers or members of religious orders, and in § 1.1402(a)–12, relating to the term ''possession of the United States'' as used for purposes of the tax on self-employment income. Thus, in the case of a citizen of the United States conducting, in a foreign country, a trade or business in which both personal services and capital are material income-producing factors, any part of the income therefrom which is excluded from gross income as earned income under the provisions of section 911 and the regulations thereunder is not taken into account in determining net earnings from self-employment.

(b) *Trade or business carried on.* The trade or business must be carried on by the individual, either personally or through agents or employees. Accordingly, income derived from a trade or business carried on by an estate or trust is not included in determining the net earnings from self-employment of the individual beneficiaries of such estate or trust.

(c) *Aggregate net earnings.* Where an individual is engaged in more than one trade or business within the meaning of section 1402(c) and § 1.1402(c)–1, his net earnings from self-employment consist of the aggregate of the net income and losses (computed subject to the special rules provided in §§ 1.1402(a)–1 to 1.1402(a)–17 inclusive) of all such trades or businesses carried on by him. Thus, a loss sustained in one trade or business carried on by an individual will operate to offset the income derived by him from another trade or business.

(d) *Partnerships.* The net earnings from self-employment of an individual include, in addition to the earnings from a trade or business carried on by him, his distributive share of the income or loss, described in section 702(a)(9), from any trade or business carried on by each partnership of which he is a member. An individual's distributive share of such income or loss of a partnership shall be determined as provided in section 704, subject to the special rules set forth in section 1402(a) and in §§ 1.1402(a)–1 to 1.1402(a)–17, inclusive, and to the exclusions provided in section 1402(c) and §§ 1.1402(c)–2 to 1.1402(c)–7, inclusive. For provisions relating to the computation of the taxable income of a partnership, see section 703.

(e) *Different taxable years.* If the taxable year of a partner differs from that

of the partnership, the partner shall include, in computing net earnings from self-employment, his distributive share of the income or loss, described in section 702(a)(9), of the partnership for its taxable year ending with or within the taxable year of the partner. For the special rule in case of the termination of a partner's taxable year as result of death, see §§ 1.1402(f) and 1.1402(f)–1.

(f) *Meaning of partnerships.* For the purpose of determining net earnings from self-employment, a partnership is one which is recognized as such for income tax purposes. For income tax purposes, the term ''partnership'' includes not only a partnership as known at common law, but, also a syndicate, group, pool, joint venture, or other unincorporated organization which carries on any trade or business, financial operation, or venture, and which is not, within the meaning of the Code, a trust, estate, or a corporation. An organization described in the preceding sentence shall be treated as a partnership for purposes of the tax on self-employment income even though such organization has elected, pursuant to section 1361 and the regulations thereunder, to be taxed as a domestic corporation.

(g) *Nature of partnership interest.* The net earnings from self-employment of a partner include his distributive share of the income or loss, described in section 702(a)(9), of the partnership of which he is a member, irrespective of the nature of his membership. Thus, in determining his net earnings from self-employment, a limited or inactive partner includes his distributive share of such partnership income or loss. In the case of a partner who is a member of a partnership with respect to which an election has been made pursuant to section 1361 and the regulations thereunder to be taxed as a domestic corporation, net earnings from self-employment include his distributive share of the income or loss, described in section 702(a)(9), from the trade or business carried on by the partnership computed without regard to the fact that the partnership has elected to be taxed as a domestic corporation.

(h) *Proprietorship taxed as domestic corporation.* A proprietor of an unincorporated business enterprise with respect to which an election has been made pursuant to section 1361 and the regulations thereunder to be taxed as a domestic corporation shall compute his net earnings from self-employment without regard to the fact that such election has been made.

[T.D. 6691, 28 FR 12796, Dec. 3, 1963, as amended by T.D. 7333, 39 FR 44445, Dec. 24, 1974]

§ 1.1402(a)–3 Special rules for computing net earnings from self-employment.

For the purpose of computing net earnings from self-employment, the gross income derived by an individual from a trade or business carried on by him, the allowable deductions attributable to such trade or business, and the individual's distributive share of the income or loss, described in section 702(a)(9), from any trade or business carrier on by a partnership of which he is a member shall be computed in accordance with the special rules set forth in §§ 1.1402(a)–4 to 1.1402(a)–17, inclusive.

[T.D. 7333, 39 FR 44445, Dec. 24, 1974]

§ 1.1402(a)–4 Rentals from real estate.

(a) *In general.* Rentals from real estate and from personal property leased with the real estate (including such rentals paid in crop shares) and the deductions attributable thereto, unless such rentals are received by an individual in the course of a trade or business as a real-estate dealer, are excluded. Whether or not an individual is engaged in the trade or business of a real-estate dealer is determined by the application of the principles followed in respect of the taxes imposed by sections 1 and 3. In general, an individual who is engaged in the business of selling real estate to customers with a view to the gains and profits that may be derived from such sales is a real-estate dealer. On the other hand, an individual who merely holds real estate for investment or speculation and receives rentals therefrom is not considered a real-estate dealer. Where a real-estate dealer holds real estate for investment or speculation in addition to real estate held for sale to customers in the ordinary course of his trade or business as a real-estate dealer, only the rentals

from the real estate held for sale to customers in the ordinary course of his trade or business as a real-estate dealer, and the deductions attributable thereto, are included in determining net earnings from self-employment; the rentals from the real estate held for investment or speculation, and the deductions attributable thereto, are excluded. Rentals paid in crop shares include income derived by an owner or lessee of land under an agreement entered into with another person pursuant to which such other person undertakes to produce a crop or livestock on such land and pursuant to which (1) the crop or livestock, or the proceeds thereof, are to be divided between such owner or lessee and such other person, and (2) the share of the owner or lessee depends on the amount of the crop or livestock produced. See, however, paragraph (b) of this section.

(b) *Special rule for ''includible farm rental income''*—(1) *In general.* Notwithstanding the rules set forth in paragraph (a) of this section, there shall be included in determining net earnings from self-employment for taxable years ending after 1955 any income derived by an owner or tenant of land, if the following requirements are met with respect to such income:

(i) The income is derived under an arrangement between the owner or tenant of land and another person which provides that such other person shall produce agricultural or horticultural commodities on such land, and that there shall be material participation by the owner or tenant in the production or the management of the production of such agricultural or horticultural commodities; and

(ii) There is material participation by the owner or tenant with respect to any such agricultural or horticultural commodity.

Income so derived shall be referred to in this section as ''includible farm rental income''.

(2) *Requirement that income be derived under an arrangement.* In order for rental income received by an owner or tenant of land to be treated as includible farm rental income, such income must be derived pursuant to a share-farming or other rental arrangement which contemplates material participation by the owner or tenant in the production or management of production of agricultural or horticultural commodities.

(3) *Nature of arrangement.* (i) The arrangement between the owner or tenant and the person referred to in subparagraph (1) of this paragraph may be either oral or written. The arrangement must impose upon such other person the obligation to produce one or more agricultural or horticultural commodities (including livestock, bees, poultry, and fur-bearing animals and wildlife) on the land of the owner or tenant. In addition, it must be within the contemplation of the parties that the owner or tenant will participate in the production or the management of the production of the agricultural or horticultural commodities required to be produced by the other person under such arrangement to an extent which is material with respect either to the production or to the management of production of such commodities or is material with respect to the production and management of production when the total required participation in connection with both is considered.

(ii) The term ''production'', wherever used in this paragraph, refers to the physical work performed and the expenses incurred in producing a commodity. It includes such activities as the actual work of planting, cultivating, and harvesting crops, and the furnishing of machinery, implements, seed, and livestock. An arrangement will be treated as contemplating that the owner or tenant will materially participate in the ''production'' of the commodities required to be produced by the other person under the arrangement if under the arrangement it is understood that the owner or tenant is to engage to a material degree in the physical work related to the production of such commodities. The mere undertaking to furnish machinery, implements, and livestock and to incur expenses is not, in and of itself, sufficient. Such factors may be significant, however, in cases where the degree of physical work intended of the owner or tenant is not material. For example, if under the arrangement it is understood that the owner or tenant is to engage periodically in physical work to a degree which is not material in and of

itself and, in addition, to furnish a substantial portion of the machinery, implements, and livestock to be used in the production of the commodities or to furnish or advance funds or assume financial responsibility for a substantial part of the expense involved in the production of the commodities, the arrangement will be treated as contemplating material participation of the owner or tenant in the production of such commodities.

(iii) The term ''management of the production'', wherever used in this paragraph, refers to services performed in making managerial decisions relating to the production, such as when to plant, cultivate, dust, spray, or harvest the crop, and includes advising and consulting, making inspections, and making decisions as to matters such as rotation of crops, the type of crops to be grown, the type of livestock to be raised, and the type of machinery and implements to be furnished. An arrangement will be treated as contemplating that the owner or tenant is to participate materially in the ''management of the production'' of the commodities required to be produced by the other person under the arrangement if the owner or tenant is to engage to a material degree in the management decisions related to the production of such commodities. The services which are considered of particular importance in making such management decisions are those services performed in making inspections of the production activities and in advising and consulting with such person as to the production of the commodities. Thus, if under the arrangement it is understood that the owner or tenant is to advise or consult periodically with the other person as to the production of the commodities required to be produced by such person under the arrangement and to inspect periodically the production activities on the land, a strong inference will be drawn that the arrangement contemplates participation by the owner or tenant in the management of the production of such commodities. The mere undertaking to select the crops or livestock to be produced or the type of machinery and implements to be furnished or to make decisions as to the rotation of crops generally is not, in and of itself, sufficient. Such factors may be significant, however, in making the overall determination of whether the arrangement contemplates that the owner or tenant is to participate materially in the management of the production of the commodities. Thus, if in addition to the understanding that the owner or tenant is to advise or consult periodically with the other person as to the production of the commodities and to inspect periodically the production activities on the land, it is also understood that the owner is to select the type of crops and livestock to be produced and the type of machinery and implements to be furnished and to make decisions as to the rotation of crops, the arrangement will be treated as contemplating material participation of the owner or tenant in the management of production of such commodities.

(4) *Actual participation.* In order for the rental income received by the owner or tenant of land to be treated as includible farm rental income, not only must it be derived pursuant to the arrangement described in subparagraph (1) of this paragraph, but also the owner or tenant must actually participate to a material degree in the production or in the management of the production of any of the commodities required to be produced under the arrangement, or he must actually participate in both the production and the management of the production to an extent that his participation in the one when combined with his participation in the other will be considered participation to a material degree. If the owner or tenant shows that he periodically advises or consults with the other person, who under the arrangement produces the agricultural or horticultural commodities, as to the production of any of these commodities and also shows that he periodically inspects the production activities on the land, he will have presented strong evidence of the existence of the degree of participation contemplated by section 1402(a)(1). If, in addition to the foregoing, the owner or tenant shows that he furnishes a substantial portion of the machinery, implements, and livestock used in the production of the

commodities or that he furnishes or advances funds, or assumes financial responsibility, for a substantial part of the expense involved in the production of the commodities, he will have established the existence of the degree of participation contemplated by section 1402(a)(1) and this paragraph.

(5) *Employees or agents.* An agreement entered into by an employee or agent of an owner or tenant and another person is considered to be an arrangement entered into by the owner or tenant for purposes of satisfying the requirement set forth in paragraph (b)(2) that the income must be derived under an arrangement between the owner or tenant and another person. For purposes of determining whether the arrangement satisfies the requirement set forth in paragraph (b)(3) that the parties contemplate that the owner or tenant will materially participate in the production or management of production of a commodity, services which will be performed by an employee or agent of the owner or tenant are not considered to be services which the arrangement contemplates will be performed by the owner or tenant. Services actually performed by such employee or agent are not considered services performed by the owner or tenant in determining the extent to which the owner or tenant has participated in the production or management of production of a commodity. For taxable years beginning before January 1, 1974, contemplated or actual services of an agent or an employee of the owner or tenant are deemed to be contemplated or actual services of the owner or tenant under paragraphs (b)(3) and (b)(4) of this section.

(6) *Examples.* Application of the rules prescribed in this paragraph may be illustrated by the following examples:

Example (1). After the death of her husband, Mrs. A rents her farm, together with its machinery and equipment, to B for one-half of the proceeds from the commodities produced on such farm by B. It is agreed that B will live in the tenant house on the farm and be responsible for the over-all operation of the farm, such as planting, cultivating, and harvesting the field crops, caring for the orchard and harvesting the fruit and caring for the livestock and poultry. It also is agreed that Mrs. A will continue to live in the farm residence and help B operate the farm. Under the agreement it is contemplated that Mrs. A will regularly operate and clean the cream separator and feed the poultry flock and collect the eggs. When possible she will assist B in such work as spraying the fruit trees, penning livestock, culling the poultry, and controlling weeds. She will also assist in preparing the meals when B engages seasonal workers. The agreement between Mrs. A and B clearly provides that she will materially participate in the over-all production operations to be conducted on her farm by B. In actual practice, Mrs. A performs such regular and intermittent services. The regularly performed services are material to the production of an agricultural commodity, and the intermittent services performed are material to the production operations to which they relate. The furnishing of a substantial portion of the farm machinery and equipment also adds support to a conclusion that Mrs. A has materially participated. Accordingly, the rental income Mrs. A receives from her farm should be included in net earnings from self-employment.

Example (2). D agrees to produce a crop on C's cotton farm under an arrangement providing that C and D will each receive one-half of the proceeds from such production. C agrees to furnish all the necessary equipment, and it is understood that he is to advise D when to plant the cotton and when it needs to be chopped, plowed, sprayed, and picked. It is also understood that during the growing season C is to inspect the crop every few days to determine whether D is properly taking care of the crop. Under the arrangement, D is required to furnish all labor needed to grow and harvest the crop. C, in fact, renders such advice, makes such inspections, and furnishes such equipment. C's contemplated participation in management decisions is considered material with respect to the management of the cotton production operation. C's actual participation pursuant to the arrangement is also considered to be material with respect to the management of the production of cotton. Accordingly, the income C receives from his cotton farm is to be included in computing his net earnings from self-employment.

Example (3). E owns a grain farm and turns its operation over to his son, F. By the oral rental arrangement between E and F, the latter agrees to produce crops of grain on the farm, and E agrees that he will be available for consultation and advice and will inspect and help to harvest the crops. E furnishes most of the equipment, including a tractor, a combine, plows, wagons, drills, and harrows; he continues to live on the farm and does some of the work such as repairing barns and farm machinery, going to town for supplies, cutting weeds, etc.; he regularly inspects the crops during the growing season; and he helps F to harvest the crops. Although the

final decisions are made by F, he frequently consults with his father regarding the production of the crops. An evaluation of all of E's actual activities indicates that they are sufficiently substantial and regular to support a conclusion that he is materially participating in the crop production operations and the management thereof. If it can be shown that the degree of E's actual participation was contemplated by the arrangement, E's income from the grain farm will be included in computing net earnings from self-employment.

Example (4). G owns a fully-equipped farm which he rents to H under an arrangement which contemplates that G shall materially participate in the management of the production of crops raised on the farm pursuant to the arrangement. G lives in town about 5 miles from the farm. About twice a month he visits the farm and looks over the buildings and equipment. G may occasionally, in an emergency, discuss with H some phase of a crop production activity. In effect, H has complete charge of the management of farming operations regardless of the understanding between him and G. Although G pays one-half of the cost of the seed and fertilizer and is charged for the cost of materials purchased by H to make all necessary repairs, G's activities do not constitute material participation in the crop production activities. Accordingly, G's income from the crops is not included in computing net earnings from self-employment.

Example (5). I owned a farm several miles from the town in which he lived. He rented the farm to J under an arrangement which contemplated I's material participation in the management of production of wheat. I furnished one-half of the seed and fertilizer and all the farm equipment and livestock. He employed K to perform all the services in advising, consulting, and inspecting contemplated by the arrangement. I is not materially participating in the management of production of wheat by J. The work done by I's employee, K, is not attributable to I in determining the extent of I's participation. I's rental income from the arrangement is, therefore, not to be included in computing his net earnings from self-employment. For taxable years beginning before January 1, 1974, however, I's rental income would be includible in those earnings.

Example (6). L, a calendar-year taxpayer, appointed M as his agent to rent his fully equipped farm for 1974. M entered into a rental arrangement with N under which M was to direct the planting of crops, inspect them weekly during the growing season, and consult with N on any problems that might arise in connection with irrigation, etc., while N furnished all the labor needed to grow and harvest the crops. M did in fact fulfill its responsibilities under the arrangement. Although the arrangement entered into by M and N is considered to have been made by L, M's services are not attributable to L, and L's furnishing of a fully equipped farm is insufficient by itself to constitute material participation in the production of the crops. Accordingly, L's rental income from the arrangement is not included in his net earnings from self-employment for that year. For taxable years beginning before January 1, 1974, however, L's rental income would be includible in those earnings.

(c) *Rentals from living quarters*—(1) *No services rendered for occupants.* Payments for the use or occupancy of entire private residences or living quarters in duplex or multiple-housing units are generally rentals from real estate. Except in the case of real-estate dealers, such payments are excluded in determining net earnings from self-employment even though such payments are in part attributable to personal property furnished under the lease.

(2) *Services rendered for occupants.* Payments for the use or occupancy of rooms or other space where services are also rendered to the occupant, such as for the use or occupancy of rooms or other quarters in hotels, boarding houses, or apartment houses furnishing hotel services, or in tourist camps or tourist homes, or payments for the use or occupancy of space in parking lots, warehouses, or storage garages, do not constitute rentals from real estate; consequently, such payments are included in determining net earnings from self-employment. Generally, services are considered rendered to the occupant if they are primarily for his convenience and are other than those usually or customarily rendered in connection with the rental of rooms or other space for occupancy only. The supplying of maid service, for example, constitutes such service; whereas the furnishing of heat and light, the cleaning of public entrances, exits, stairways and lobbies, the collection of trash, and so forth, are not considered as services rendered to the occupant.

(3) *Example.* The application of this paragraph may be illustrated by the following example:

Example. A, an individual, owns a building containing four apartments. During the taxable year, he receives $1,400 from apartments numbered 1 and 2, which are rented without services rendered to the occupants, and $3,600 from apartments numbered 3 and 4, which

are rented with services rendered to the occupants. His fixed expenses for the four apartments aggregate $1,200 during the taxable year. In addition, he has $500 of expenses attributable to the services rendered to the occupants of apartments 3 and 4. In determining his net earnings from self-employment, A includes the $3,600 received from apartments 3 and 4, and the expenses of $1,100 ($500 plus one-half of $1,200) attributable thereto. The rentals and expenses attributable to apartments 1 and 2 are excluded. Therefore, A has $2,500 of net earnings from self-employment for the taxable year from the building.

(d) *Treatment of business income which includes rentals from real estate.* Except in the case of a real-estate dealer, where an individual or a partnership is engaged in a trade or business the income of which is classifiable in part as rentals from real estate, only that portion of such income which is not classifiable as rentals from real estate, and the expenses attributable to such portion, are included in determining net earnings from self-employment.

[T.D. 6691, 28 FR 12796, Dec. 3, 1963, as amended by T.D. 7710, 45 FR 50739, July 31, 1980]

§ 1.1402(a)–5 Dividends and interest.

(a) All dividends on shares of stock are excluded unless they are received by an individual in the course of his trade or business as a dealer in stocks or securities.

(b) Interest on any bond, debenture, note, or certificate, or other evidence of indebtedness, issued with interest coupons or in registered form by any corporation (including one issued by a government or political subdivision thereof) is excluded unless such interest is received in the course of a trade or business as a dealer in stocks or securities. However, interest with respect to which a credit against tax is allowable as provided in section 35, that is, interest on certain obligations of the United States and its instrumentalities, is not included in net earnings from self-employment even though received in the course of a trade or business as a dealer in stocks or securities. Only interest on bonds, debentures, notes, or certificates, or other evidence of indebtedness, issued with interest coupons or in registered form by a corporation, is excluded in the case of all persons other than dealers in stocks or securities; other interest received in the course of any trade or business (such as interest received by a pawnbroker on his loans or interest received by a merchant on his accounts or notes receivable) is not excluded.

(c) Dividends and interest of the character excludable under paragraphs (a) and (b) of this section received by an individual on stocks or securities held for speculation or investment are excluded whether or not the individual is a dealer in stocks or securities.

(d) A dealer in stocks or securities is a merchant of stocks or securities with an established place of business, regularly engaged in the business of purchasing stocks or securities and reselling them to customers; that is, he is one who as a merchant buys stocks or securities and sells them to customers with a view to the gains and profits that may be derived therefrom. Persons who buy and sell or hold stocks or securities for investment or speculation, irrespective of whether such buying or selling constitutes the carrying on of a trade or business, are not dealers in stocks or securities.

§ 1.1402(a)–6 Gain or loss from disposition of property.

(a) There is excluded any gain or loss: (1) Which is considered as gain or loss from the sale or exchange of a capital asset; (2) from the cutting of timber or the disposal of timber, coal, or iron ore, even though held primarily for sale to customers, if section 631 is applicable to such gain or loss; and (3) from the sale, exchange, involuntary conversion, or other disposition of property if such property is neither (i) stock in trade or other property of a kind which would properly be includible in inventory if on hand at the close of the taxable year, nor (ii) property held primarily for sale to customers in the ordinary course of a trade or business. For the purpose of the special rule in subparagraph (3) of this paragraph, it is immaterial whether a gain or loss is treated as a capital gain or loss or as an ordinary gain or loss for purposes other than determining net earnings from self-employment. For instance, where the character of a loss is governed by the provisions of section

1231, such loss is excluded in determining net earnings from self-employment even though such loss is treated under section 1231 as an ordinary loss. For the purposes of this special rule, the term ''involuntary conversion'' means a compulsory or involuntary conversion of property into other property or money as a result of its destruction in whole or in part, theft or seizure, or an exercise of the power of requisition or condemnation or the threat or imminence thereof; and the term ''other dispostion'' includes the destruction or loss, in whole or in part, of property by fire, storm, shipwreck, or other casualty, or by theft, even though there is no conversion of such property into other property or money.

(b) The application of this section may be illustrated by the following example:

Example. During the taxable year 1954, A, who owns a grocery store, realized a net profit of $1,500 from the sale of groceries and a gain of $350 from the sale of a refrigerator case. During the same year, he sustained a loss of $2,000 as a result of damage by fire to the store building. In computing taxable income, all of these items are taken into account. In determining net earnings from self-employment, however, only the $1,500 of profit derived from the sale of groceries is included. The $350 gain and the $2,000 loss are excluded.

[T.D. 6691, 28 FR 12796, Dec. 3, 1963, as amended by T.D. 6841, 30 FR 9309, July 27, 1965]

§ 1.1402(a)–7 Net operating loss deduction.

The deduction provided by section 172, relating to net operating losses sustained in years other than the taxable year, is excluded.

§ 1.1402(a)–8 Community income.

(a) *In case of an individual.* If any of the income derived by an individual from a trade or business (other than a trade or business carried on by a partnership) is community income under community property laws applicable to such income, all of the gross income, and the deductions attributable to such income, shall be treated as the gross income and deductions of the husband unless the wife exercises substantially all of the management and control of such trade or business, in which case all of such gross income and deductions shall be treated as the gross income and deductions of the wife. For the purpose of this special rule, the term ''management and control'' means management and control in fact, not the management and control imputed to the husband under the community property laws. For example, a wife who operates a beauty parlor without any appreciable collaboration on the part of her husband will be considered as having substantially all of the management and control of such business despite the provision of any community property law vesting in the husband the right of management and control of community property; and the income and deductions attributable to the operation of such beauty parlor will be considered the income and deductions of the wife.

(b) *In case of a partnership.* Even though a portion of a partner's distributive share of the income or loss, described in section 702(a)(9), from a trade or business carried on by a partnership is community income or loss under the community property laws applicable to such share, all of such distributive share shall be included in computing the net earnings from self-employment of such partner; no part of such share shall be taken into account in computing the net earnings from self-employment of the spouse of such partner. In any case in which both spouses are members of the same partnership, the distributive share of the income or loss of each spouse is included in computing the net earnings from self-employment of that spouse.

§ 1.1402(a)–9 Puerto Rico.

(a) *Residents.* A resident of Puerto Rico, whether or not a bona fide resident thereof during the entire taxable year, and whether or not an alien, a citizen of the United States, or a citizen of Puerto Rico, shall compute his net earnings from self-employment in the same manner as would a citizen of the United States residing in the United States. See paragraph (d) of § 1.1402(b)–1 for regulations relating to nonresident aliens. For the purpose of the tax on self-employment income, the gross income of such a resident of Puerto Rico also includes income from Puerto Rican sources. Thus, under this

special rule, income from Puerto Rican sources will be included in determining net earnings from self-employment of a resident of Puerto Rico engaged in the active conduct of a trade or business in Puerto Rico despite the fact that, under section 933, such income may not be taken into account for purposes of the tax under section 1 or 3.

(b) *Nonresidents.* A citizen of Puerto Rico who is also a citizen of the United States and who is not a resident of Puerto Rico will compute his net earnings from self-employment in the same manner and subject to the same provisions of law and regulations as other citizens of the United States.

§ 1.1402(a)–10 Personal exemption deduction.

The deduction provided by section 151, relating to personal exemptions, is excluded.

§ 1.1402(a)–11 Ministers and members of religious orders.

(a) *In general.* For each taxable year ending after 1954 in which a minister or member of a religious order is engaged in a trade or business, within the meaning of section 1402(c) and § 1.1402(c)–5, with respect to service performed in the exercise of his ministry or in the exercise of duties required by such order, net earnings from self-employment from such trade or business include the gross income derived during the taxable year from any such service, less the deductions attributable to such gross income. For each taxable year ending on or after December 31, 1957, such minister or member of a religious order shall compute his net earnings from self-employment derived from the performance of such service without regard to the exclusions from gross income provided by section 107 (relating to rental value of parsonages) and section 119 (relating to meals and lodging furnished for the convenience of the employer). Thus, a minister who is subject to self-employment tax with respect to his services as a minister will include in the computation of his net earnings from self-employment for a taxable year ending on or after December 31, 1957, the rental value of a home furnished to him as remuneration for services performed in the exercise of his ministry or the rental allowance paid to him as remuneration for such services irrespective of whether such rental value or rental allowance is excluded from gross income by section 107. Similarly, the value of any meals or lodging furnished to a minister or to a member of a religious order in connection with service performed in the exercise of his ministry or as a member of such order will be included in the computation of his net earnings from self-employment for a taxable year ending on or after December 31, 1957, notwithstanding the exclusion of such value from gross income by section 119.

(b) *In employ of American employer.* If a minister or member of a religious order engaged in a trade or business described in section 1402(c) and § 1.1402(c)–5 is a citizen of the United States and performs service, in his capacity as a minister or member of a religious order, as an employee of an American employer, as defined in section 3121(h) and the regulations thereunder in Part 31 of this chapter (Employment Tax Regulations), his net earnings from self-employment derived from such service shall be computed as provided in paragraph (a) of this section but without regard to the exclusions from gross income provided in section 911, relating to earned income from sources without the United States, and section 931, relating to income from sources within possessions of the United States. Thus, even though all the income of the minister or member for service of the character to which this paragraph is applicable was derived from sources without the United States, or from sources within possessions of the United States, and therefore may be excluded from gross income, such income is included in computing net earnings from self-employment.

(c) *Minister in a foreign country whose congregation is composed predominantly of citizens of the United States*—(1) *Taxable years ending after 1956.* For any taxable year ending after 1956, a minister of a church, who is engaged in a trade or business within the meaning of section 1402(c) and § 1.1402(c)–5, is a citizen of the United States, is performing service in the exercise of his ministry

in a foreign country, and has a congregation composed predominantly of United States citizens, shall compute his net earnings from self-employment derived from his services as a minister for such taxable year without regard to the exclusion from gross income provided in section 911, relating to earned income from sources without the United States. For taxable years ending on or after December 31, 1957, such minister shall also disregard sections 107 and 119 in the computation of his net earnings from self-employment. (See paragraph (a) of this section.) For purposes of section 1402(a)(8) and this paragraph a ''congregation composed predominantly of citizens of the United States'' means a congregation the majority of which throughout the greater portion of its minister's taxable year were United States citizens.

(2) *Election for taxable years ending after 1954 and before 1957.* (i) A minister described in subparagraph (1) of this paragraph who, for a taxable year ending after 1954 and before 1957, had income from service described in such subparagraph which would have been included in computing net earnings from self-employment if such income had been derived in a taxable year ending after 1956 by an individual who had filed a waiver certificate under section 1402(e), may elect to have section 1402(a)(8) and subparagraph (1) of this paragraph apply to his income from such service for his taxable years ending after 1954 and before 1957. If such minister filed a waiver certificate prior to August 1, 1956, in accordance with § 1.1402(e)(1)–1, or he files such a waiver certificate on or before the due date of his return (including any extensions thereof) for his last taxable year ending before 1957, he must make such election on or before the due date of his return (including any extensions thereof) for such taxable year or before April 16, 1957, whichever is the later. If the waiver certificate is not so filed, the minister must make his election on or before the due date of the return (including any extensions thereof) for his first taxable year ending after 1956. Notwithstanding the expiration of the period prescribed by section 1402(e)(2) for filing such waiver, the minister may file a waiver certificate at the time he makes the election. In no event shall an election be valid unless the minister files prior to or at the time of the election a waiver certificate in accordance with § 1.1402(e)(1)–1.

(ii) The election shall be made by filing with the district director of internal revenue with whom the waiver certificate, Form 2031, is filed a written statement indicating that, by reason of the Social Security Amendments of 1956, the minister desires to have the Federal old-age, survivors, and disability insurance system established by title II of the Social Security Act extended to his services performed in a foreign country as a minister of a congregation composed predominantly of United States citizens beginning with the first taxable year ending after 1954 and prior to 1957 for which he had income from such services. The statement shall be dated and signed by the minister and shall clearly state that it is an election for retroactive self-employment tax coverage under the Self-Employment Contributions Act of 1954. In addition, the statement shall include the following information:

(a) The name and address of the minister.

(b) His social security account number, if he has one.

(c) That he is a duly ordained, commissioned, or licensed minister of a church.

(d) That he is a citizen of the United States.

(e) That he is performing services in the exercise of his ministry in a foreign country.

(f) That his congregation is composed predominantly of citizens of the United States.

(g)(1) That he has filed a waiver certificate and, if so, where and under what circumstances the certificate was filed and the taxable year for which it is effective; or *(2)* that he is filing a waiver certificate with his election for retroactive coverage and, if so, the taxable year for which it is effective.

(h) That he has or has not filed income tax returns for his taxable years ending after 1954 and before 1957. If he has filed such returns, he shall state the years for which they were filed and indicate the district director of internal revenue with whom they were filed.

(iii) Notwithstanding section 1402(e)(3), a waiver certificate filed pursuant to § 1.1402(e)(1)–1 by a minister making an election under this paragraph shall be effective (regardless of when such certificate is filed) for such minister's first taxable year ending after 1954 in which he had income from service described in subparagraph (1) of this paragraph or for the taxable year of the minister prescribed by section 1402(e)(3), if such taxable year is earlier, and for all succeeding taxable years.

(iv) No interest or penalty shall be assessed or collected for failure to file a return within the time prescribed by law if such failure arises solely by reason of an election made by a minister pursuant to this paragraph or for any underpayment of self-employment income tax arising solely by reason of such election, for the period ending with the date such minister makes an election pursuant to this paragraph.

(d) *Treatment of certain remuneration paid in 1955 and 1956 as wages.* For treatment of remuneration paid to an individual for service described in section 3121(b)(8)(A) which was erroneously treated by the organization employing him as employment with-in the meaning of chapter 21 of the Internal Revenue Code, see § 1.1402(e)(4)–1.

§ 1.1402(a)–12 Possession of the United States.

For purposes of the tax on self-employment income, the term ''possession of the United States,'' as used in section 931 (relating to income from sources within possessions of the United States) and section 932 (relating to citizens of possessions of the United States) shall be deemed not to include the Virgin Islands, Guam, or American Samoa. The provisions of section 1402(a)(9) and of this section insofar as they involve nonapplication of sections 931 and 932 to Guam or American Samoa, shall apply only in the case of taxable years beginning after 1960. For definition of the term ''United States'' and for other geographical definitions relating to the Continental Shelf see section 638 and § 1.638–1.

[T.D. 7277, 38 FR 12742, May 15, 1973]

§ 1.1402(a)–13 Income from agricultural activity.

(a) *Agricultural trade or business.* (1) An agricultural trade or business is one in which, if the trade or business were carried on exclusively by employees, the major portion of the services would constitute agricultural labor as defined in section 3121(g) and the regulations thereunder in part 31 of this chapter (Employment Tax Regulations). In case the services are in part agricultural and in part nonagricultural, the time devoted to the performance of each type of service is the test to be used to determine whether the major portion of the services would constitute agricultural labor. If more than half of the time spent in performing all the services is spent in performing services which would constitute agricultural labor under section 3121(g), the trade or business is agricultural. If only half, or less, of the time spent in performing all the services is spent in performing services which would constitute agricultural labor under section 3121(g), the trade or business is not agricultural. In every case the time spent in performing the services will be computed by adding the time spent in the trade or business during the taxable year by every individual (including the individual carrying on such trade or business and the members of his family) in performing such services. The operation of this special rule is not affected by section 3121(c), relating to the included-excluded rule for determining employment.

(2) The rules prescribed in subparagraph (1) of this paragraph have no application where the nonagricultural services are performed in connection with an enterprise which constitutes a trade or business separate and distinct from the trade or business conducted as an agricultural enterprise. Thus, the operation of a roadside automobile service station on farm premises constitutes a trade or business separate and distinct from the agricultural enterprise, and the gross income derived from such service station, less the deductions attributable thereto, is to be taken into account in determining net earnings from self-employment.

(b) *Farm operator's income for taxable years ending before 1955.* Income derived

in a taxable year ending before 1955 from any agricultural trade or business (see paragraph (a) of this section), and all deductions attributable to such income, are excluded in computing net earnings from self-employment.

(c) *Farm operator's income for taxable years ending after 1954.* Income derived in a taxable year ending after 1954 from an agricultural trade or business (see paragraph (a) of this section) is includible in computing net earnings from self-employment. Income derived from an agricultural trade or business includes income derived by an individual under an agreement entered into by such individual with another person pursuant to which such individual undertakes to produce agricultural or horticultural commodities (including livestock, bees, poultry, and fur-bearing animals and wildlife) on land owned or leased by such other person and pursuant to which the agricultural or horticultural commodities produced by such individual, or the proceeds therefrom, are to be divided between such individual and such other person, and the amount of such individual's share depends on the amount of the agricultural or horticultural commodities produced. However, except as provided in paragraph (d) of this section, relating to arrangements involving material participation, the income derived under such an agreement by the owner or lessee of the land is not includible in computing net earnings from self-employment. See § 1.1402(a)–4. For options relating to the computation of net earnings from self-employment, see §§ 1.1402(a)–14 and 1.1402(a)–15.

(d) *Includible farm rental income for taxable years ending after 1955.* For taxable years ending after 1955, income derived from an agricultural trade or business (see paragraph (a) of this section) includes also income derived by the owner or tenant of land under an arrangement between such owner or tenant and another person, if such arrangement provides that such other person shall produce agricultural or horticultural commodities (including livestock, bees, poultry, and fur-bearing animals and wildlife) on such land, and that there shall be material participation by the owner or tenant in the production or the management of the production of such agricultural or horticultural commodities, and if there is material participation by the owner or tenant with respect to any such agricultural or horticultural commodity. See paragraph (b) of § 1.1402(a)–4. For options relating to the computation of net earnings from self-employment, see §§ 1.1402(a)–14 and 1.1402(a)–15.

(e) *Income from service performed after 1956 as a crew leader.* Income derived by a crew leader (see section 3121(o) and the regulations thereunder in Part 31 of this chapter (Employment Tax Regulations)) from service performed after 1956 in furnishing individuals to perform agricultural labor for another person and from service performed after 1956 in agricultural labor as a member of the crew is considered to be income derived from a trade or business for purposes of § 1.1402(c)–1. Whether such trade or business is an agricultural trade or business shall be determined by applying the rules set forth in this section.

§ 1.1402(a)–14 Options available to farmers in computing net earnings from self-employment for taxable years ending after 1954 and before December 31, 1956.

(a) *Computation of net earnings.* In the case of any trade or business which is carried on by an individual who reports his income on the cash receipts and disbursements method, and in which, if it were carried on exclusively by employees, the major portion of the services would constitute agricultural labor as defined in section 3121(g) (see paragraph (a) of § 1.1402(a)–13), net earnings from self-employment may, for a taxable year ending after 1954, at the option of the taxpayer, be computed as follows:

(1) *Gross income $1,800 or less.* If the gross income, computed as provided in paragraph (b) of this section, from such trade or business is $1,800 or less, the taxpayer may, at his option, treat as net earnings from self-employment from such trade or business an amount equal to 50 percent of such gross income. If the taxpayer so elects, the amount equal to 50 percent of such gross income shall be used in computing his self-employment income in lieu of his actual net earnings from such trade or business, if any.

(2) *Gross income in excess of $1,800*. If the gross income, computed as provided in paragraph (b) of this section, from such trade or business is more than $1,800, and the actual net earnings from self-employment from such trade or business are less than $900, the taxpayer may, at his option, treat $900 as net earnings from self-employment. If the taxpayer so elects, $900 shall be used in computing his self-employment income in lieu of his actual net earnings from such trade or business, if any. However, if the taxpayer's actual net earnings from such trade or business, as computed in accordance with §§ 1.1402(a)–1 through 1.1402(a)–3 are $900 or more, such actual net earnings shall be used in computing his self-employment income.

(b) *Computation of gross income*. For purposes of paragraph (a) of this section, gross income shall consist of the gross receipts from such trade or business reduced by the cost or other basis of property which was purchased and sold in carrying on such trade or business, adjusted (after such reduction) in accordance with the provisions of § 1.1402(a)–3, relating to income and deductions not included in computing net earnings from self-employment.

(c) *Two or more agricultural activities*. If an individual is engaged in more than one agricultural trade or business within the meaning of paragraph (a) of § 1.1402(a)–13 (for example, the business of ordinary farming and the business of cotton ginning), the gross income derived from each agricultural trade or business shall be aggregated for purposes of the optional method provided in paragraph (a) of this section for computing net earnings from self-employment.

(d) *Examples*. Application of the regulations prescribed in paragraphs (a) and (b) of this section may be illustrated by the following examples:

Example (1). F, a farmer, uses the cash receipts and disbursements method of accounting in making his income tax returns. F's books and records show that during the calendar year 1955 he received $1,200 from the sale of produce raised on the farm, $200 from the sale of livestock raised on the farm and not held for breeding or dairy purposes, and $600 from the sale of a tractor. The income from the sale of the tractor is of a type which is excluded from net earnings from self-employment by section 1402(a). F's actual net earnings from self-employment, computed in accordance with the provisions of §§ 1.1402(a)–1 through 1.1402(a)–3, are $450. F may report $450 as his net earnings from self-employment or he may elect to report $700 (one-half of $1,400).

Example (2). C, a cattleman, uses the cash receipts and disbursements method of accounting in making his income tax returns. C had actual net earnings from self-employment, computed in accordance with the provisions of §§ 1.1402(a)–1 through 1.1402(a)–3, of $725. His gross receipts were $1,000 from the sale of produce raised on the farm and $1,200 from the sale of feeder cattle, which C bought for $500. The income from the sale of the feeder cattle is of a type which is included in computing net earnings from self-employment. Therefore, C may report $725 as his net earnings from self-employment or he may elect to report $850, one-half of $1,700 ($2,200 minus $500).

Example (3). R, a rancher, has gross income of $3,000 from the operation of his ranch, computed as provided in paragraph (b) of this section. His actual net earnings from self-employment from farming activities are less than $900. R, nevertheless, may elect to report $900 as net earnings from self-employment from such trade or business. If R had actual net earnings from self-employment from his farming activities in the amount of $900 or more, he would be required to report such amount in computing his self-employment income.

(e) *Members of farm partnerships*. The optional method provided by paragraph (a) of this section for computing net earnings from self-employment is not available to a member of a partnership with respect to his distributive share of the income or loss from any trade or business carried on by any partnership of which he is a member.

§ 1.1402(a)–15 Options available to farmers in computing net earnings from self-employment for taxable years ending on or after December 31, 1956.

(a) *Computation of net earnings*. In the case of any trade or business which is carried on by an individual or by a partnership and in which, if such trade or business were carried on exclusively by employees, the major portion of the services would constitute agricultural labor as defined in section 3121(g) (see paragraph (a) of § 1.1402(a)–13), net earnings from self-employment may, for a

taxable year ending on or after December 31, 1956, at the option of the taxpayer, be computed as follows:

(1) *In case of an individual*—(i) *Gross income of less than specified amount.* If the gross income, computed as provided in paragraph (b) of this section, from such trade or business is $2,400 or less ($1,800 or less for a taxable year ending on or after December 31, 1956, and beginning before January 1, 1966), the taxpayer may, at his option, treat as net earnings from self-employment from such trade or business an amount equal to 66⅔ percent of such gross income. If the taxpayer so elects, the amount equal to 66⅔ percent of such gross income shall be used in computing his self-employment income in lieu of his actual net earnings from such trade or business, if any.

(ii) *Gross income in excess of specified amount.* If the gross income, computed as provided in paragraph (b) of this section, from such trade or business is more than $2,400 ($1,800 for a taxable year ending on or after December 31, 1956, and beginning before January 1, 1966), and the net earnings from self-employment from such trade or business (computed without regard to this section) are less than $1,600 ($1,200 for a taxable year ending on or after December 31, 1956, and beginning before January 1, 1966), the taxpayer may, at his option, treat $1,600 ($1,200 for a taxable year ending on or after December 31, 1956, and beginning before January 1, 1966) as net earnings from self-employment. If the taxpayer so elects, $1,600 ($1,200 for a taxable year ending on or after December 31, 1956, and beginning before January 1, 1966) shall be used in computing his self-employment income in lieu of his actual net earnings from such trade or business, if any. However, if the taxpayer's actual net earnings from such trade or business, as computed in accordance with the applicable provisions of §§ 1.1402(a)–1 to 1.1402(a)–13, inclusive, are $1,600 or more ($1,200 or more for a taxable year ending on or after December 31, 1956, and beginning before January 1, 1966) such actual net earnings shall be used in computing his self-employment income.

(2) *In case of a member of a partnership*—(i) *Distributive share of gross income of less than specified amount.* If a taxpayer's distributive share of the gross income of a partnership (as such gross income is computed under the provisions of paragraph (b) of this section) derived from such trade or business (after such gross income has been reduced by the sum of all payments to which section 707(c) applies) is $2,400 or less ($1,800 or less for a taxable year ending on or after December 31, 1956, and beginning before January 1, 1966), the taxpayer may, at his option, treat as his distributive share of income described in section 702(a)(9) derived from such trade or business an amount equal to 66⅔ percent of his distributive share of such gross income (after such gross income has been reduced by the sum of all payments to which section 707(c) applies). If the taxpayer so elects, the amount equal to 66⅔ percent of his distributive share of such gross income shall be used by him in the computation of his net earnings from self-employment in lieu of the actual amount of his distributive share of income described in section 702(a)(9) from such trade or business, if any.

(ii) *Distributive share of gross income in excess of specified amount.* If a taxpayer's distributive share of the gross income of the partnership (as such gross income is computed under the provisions of paragraph (b) of this section) derived from such trade or business (after such gross income has been reduced by the sum of all payments to which section 707(c) applies) is more than $2,400 ($1,800 for a taxable year ending on or after December 31, 1956, and beginning before January 1, 1966) and the actual amount of his distributive share (whether or not distributed) of income described in section 702(a)(9) derived from such trade or business (computed without regard to this section) is less than $1,600 ($1,200 for a taxable year ending on or after December 31, 1956, and beginning before January 1, 1966), the taxpayer may, at his option, treat $1,600 ($1,200 for a taxable year ending on or after December 31, 1956, and beginning before January 1, 1966) as his distributive share of income described in section 702(a)(9) derived from such trade or business. If the taxpayer so elects, $1,600 ($1,200 for a taxable year ending on or after December

31, 1956, and beginning before January 1, 1966) shall be used by him in the computation of his net earnings from self-employment in lieu of the actual amount of his distributive share of income described in section 702(a)(9) from such trade or business, if any. However, if the actual amount of the taxpayer's distributive share of income described in section 702(a)(9) from such trade or business, as computed in accordance with the applicable provisions of §§ 1.1402(a)–1 to 1.1402(a)–13, inclusive, is $1,600 or more ($1,200 or more for a taxable year ending on or after December 31, 1956, and beginning before January 1, 1966), such actual amount of the taxpayer's distributive share shall be used in computing his net earnings from self-employment.

(iii) *Cross reference.* For a special rule in the case of certain deceased partners, see paragraph (c) of § 1.1402(f)–1.

(b) *Computation of gross income.* For purposes of this section gross income has the following meanings:

(1) In the case of any such trade or business in which the income is computed under a cash receipts and disbursements method, the gross receipts from such trade or business reduced by the cost or other basis of property which was purchased and sold in carrying on such trade or business (see paragraphs (a) and (c), other than paragraph (a)(5), of § 1.61–4), adjusted (after such reduction) in accordance with the applicable provisions of §§ 1.1402(a)–3 to 1.1402(a)–13, inclusive.

(2) In the case of any such trade or business in which the income is computed under an accrual method (see paragraphs (b) and (c), other than paragraph (b)(5), of § 1.61–4), the gross income from such trade or business, adjusted in accordance with the applicable provisions of §§ 1.1402(a)–3 to 1.1402(a)–13, inclusive.

(c) *Two or more agricultural activities.* If an individual (including a member of a partnership) derives gross income (as defined in paragraph (b) of this section) from more than one agricultural trade or business, such gross income (including his distributive share of the gross income of any partnership derived from any such trade or business) shall be deemed to have been derived from one trade or business. Thus, such an individual shall aggregate his gross income derived from each agricultural trade or business carried on by him (which includes, under paragraph (b) of § 1.1402(a)–1, any guaranteed payment, within the meaning of section 707(c), received by him from a farm partnership of which he is a member) and his distributive share of partnership gross income (after such gross income has been reduced by any guaranteed payment within the meaning of section 707(c)) derived from each farm partnership of which he is a member. Such gross income is the amount to be considered for purposes of the optional method provided in this section for computing net earnings from self-employment. If the aggregate gross income of an individual includes income derived from an agricultural trade or business carried on by him and a distributive share of partnership income derived from an agricultural trade or business carried on by a partnership of which he is a member, such aggregate gross income shall be treated as income derived from a single trade or business carried on by him, and such individual shall apply the optional method applicable to individuals set forth in paragraph (a)(1) of this section for purposes of computing his net earnings from self-employment.

(d) *Examples.* The application of this section may be illustrated by the following examples:

Example (1). F is engaged in the business of farming and computes his income under the cash receipts and disbursements method. He files his income tax returns on the basis of the calendar year. During the year 1966, F's gross income from the business of farming (computed in accordance with paragraph (b)(1) of this section) is $2,325. His actual net earnings from self-employment derived from such business are $1,250. As his net earnings from self-employment, F may report $1,250 or, by the optional computation method, he may report $1,550 (66⅔ percent of $2,325).

Example (2). G is engaged in the business of farming and computes his income under the accrual method. His income tax returns are filed on the calendar year basis. For the year 1966, G's gross income from the operation of his farm (computed in accordance with paragraph (b)(2) of this section) is $2,800. He has actual net earnings from self-employment derived from such farm in the amount of $1,250. As his net earnings from self-employment derived from his farm, G may report

his actual net earnings of $1,250, or by the optional method he may report $1,600. If G's actual net earnings from self-employment from his farming activities for 1966 were in an amount of $1,600 or more, he would be required to report such amount in computing his self-employment income.

Example (3). M, who files his income tax returns on a calendar year basis, is one of the three partners of the XYZ Company, a partnership, engaged in the business of farming. The taxable year of the partnership is the calendar year, and its income is computed under the cash receipts and disbursements method. For M's services in connection with the planting, cultivating, and harvesting of the crops during the year 1966 the partnership agrees to pay him $500, the full amount of which is determined without regard to the income of the partnership and constitutes a guaranteed payment within the meaning of section 707(c). This guaranteed payment to M is the only such payment made during such year. The gross income derived from the business for the year 1966 computed in accordance with paragraph (b)(1) of this section and after being reduced by the guaranteed payment of $500 made to M, is $3,000. One-third of the $3,000 ($1,000), is M's distributive share of such gross income. Under paragraph (c) of this section, the guaranteed payment ($500) received by M and his distributive share of the partnership gross income ($1,000) are deemed to have been derived from one trade or business, and such amounts must be aggregated for purposes of the optional method of computing net earnings from self-employment. Since M's combined gross income from his two agricultural businesses ($1,000 and $500) is not more than $2,400 and since such income is deemed to be derived from one trade or business, M's net earnings from self-employment derived from such farming business may, at his option, be deemed to be $1,000 (66⅔ percent of $1,500).

Example (4). A is one of the two partners of the AB partnership which is engaged in the business of farming. The taxable year of the partnership is the calendar year and its income is computed under the accrual method. A files his income tax returns on the calendar year basis. The partnership agreement provides for an equal sharing in the profits and losses of the partnership by the two partners. A is an experienced farmer and for his services as manager of the partnership's farm activities during the year 1966 he receives $6,000 which amount constitutes a guaranteed payment within the meaning of section 707(c). The gross income of the partnership derived from such business for the year 1966, computed in accordance with paragraph (b)(2) of this section and after being reduced by the guaranteed payment made to A, is $9,600. A's distributive share of such gross income is $4,800 and his distributive share of income described in section 702(a)(9) derived from the partnership's business is $1,900. Under paragraph (c) of this section, the guaranteed payment received by A and his distributive share of the partnership gross income are deemed to have been derived from one trade or business, and such amounts must be aggregated for purposes of the optional method of computing his net earnings from self-employment. Since the aggregate of A's guaranteed payment ($6,000) and his distributive share of partnership gross income ($4,800) is more than $2,400 and since the aggregate of A's guaranteed payment ($6,000) and his distributive share ($1,900) of partnership income described in section 702(a)(9) is not less than $1,600, the optional method of computing net earnings from self-employment is not available to A.

Example (5). F is a member of the EFG partnership which is engaged in the business of farming. F files his income tax returns on the calendar year basis. The taxable year of the partnership is the calendar year, and its income is computed under a cash receipts and disbursements method. Under the partnership agreement the partners are to share equally the profits or losses of the business. The gross income derived from the partnership business for the year 1966, computed in accordance with paragraph (b)(1) of this section is $7,500. F's share of such gross income is $2,500. Due to drought and an epidemic among the livestock, the partnership sustains a net loss of $7,800 for the year 1966 of which loss F's share is $2,600. Since F's distributive share of gross income derived from such business is in excess of $2,400 and since F does not receive income described in section 702(a)(9) of $1,600 or more from such business, he may, at his option, be deemed to have received $1,600 as his distributive share of income described in section 702(a)(9) from such business.

[T.D. 6691, 28 FR 12796, Dec. 3, 1963, as amended by T.D. 6993, 34 FR 828, Jan. 18, 1969]

§ 1.1402(a)–16 Exercise of option.

A taxpayer shall, for each taxable year with respect to which he is eligible to use the optional method described in § 1.1402(a)–14 or § 1.1402(a)–15, make a determination as to whether his net earnings from self-employment are to be computed in accordance with such method. If the taxpayer elects the optional method for a taxable year, he shall signify such election by computing net earnings from self-employment under the optional method as set forth in Schedule F (Form 1040) of the income tax return filed by the taxpayer for such taxable year. If the optional method is not elected at the time of

the filing of the return for a taxable year with respect to which the taxpayer is eligible to elect such optional method, such method may be elected on an amended return (or on such other form as may be prescribed for such use) filed within the period prescribed by section 6501 and the regulations thereunder for the assessment of the tax for such taxable year. If the optional method is elected on a return for a taxable year, the taxpayer may revoke such election by filing an amended return (or such other form as may be prescribed for such use) for the taxable year within the period prescribed by section 6501 and the regulations thereunder for the assessment of the tax for such taxable year. If the taxpayer is deceased or unable to make an election, the person designated in section 6012(b) and the regulations thereunder may, within the period prescribed in this section elect the optional method for any taxable year with respect to which the taxpayer is eligible to use the optional method and revoke an election previously made by or for the taxpayer.

§ 1.1402(a)–17 Retirement payments to retired partners.

(a) *In general.* There shall be excluded, in computing net earnings from self-employment for taxable years ending on or after December 31, 1967, certain payments made on a periodic basis by a partnership, pursuant to a written plan of the partnership, to a retired partner on account of his retirement. The exclusion applies only if the payments are made pursuant to a plan which meets the requirements prescribed in paragraph (b) of this section, and, in addition, the conditions set forth in paragraph (c) of this section are met.

(b) *Retirement plan of partnership.* (1) To meet the requirements of section 1402(a)(10), the written plan of the partnership must set forth the terms and conditions of the program or system established by the partnership for the purpose of making payments to retired partners on account of their retirement. To qualify as payments on account of retirement, the payments must constitute bona fide retirement income. Thus, payments of benefits not customarily included in a pension or retirement plan such as layoff benefits are not payments on account of retirement. Eligibility for retirement generally is established on the basis of age, physical condition, or a combination of age or physical condition and years of service. Generally, retirement benefits are measured by, and based on, such factors as years of service and compensation received. In determining whether the plan of the partnership provides for payments on account of retirement, factors, formulas, etc., reflected in public, and in broad based private, pension or retirement plans in prescribing eligibility requirements and in computing benefits may be taken into account.

(2) The plan of the partnership must provide for payments on account of retirement:

(i) To partners generally or to a class or classes of partners,

(ii) On a periodic basis, and

(iii) Which continue at least until the partner's death.

For purposes of subdivision (i) of this subparagraph, a class of partners may, in an appropriate case, contain only one member. Payments are made on a periodic basis if made at regularly recurring intervals (usually monthly) not exceeding one year.

(c) *Conditions relating to exclusion*—(1) *In general.* A payment made pursuant to a written plan of a partnership which meets the requirements of paragraph (b) of this section shall be excluded, in computing net earnings from self-employment, only if:

(i) The retired partner to whom the payment is made rendered no service with respect to any trade or business carried on by the partnership (or its successors) during the taxable year of the partnership (or its successors), which ends within or with the taxable year of the retired partner and in which the payment was received by him;

(ii) No obligation (whether certain in amount or contingent on a subsequent event) exists (as of the close of the partnership's taxable year referred to in subdivision (i) of this subparagraph) from the other partners to the retired partner except with respect to retirement payments under the plan or

rights such as benefits payable on account of sickness, accident, hospitalization, medical expenses, or death; and

(iii) The retired partner's share (if any) of the capital of the partnership has been paid to him in full before the close of the partnership's taxable year referred to in subdivision (i) of this subparagraph.

By application of the conditions set forth in this subparagraph, either all payments on account of retirement received by a retired partner during the taxable year of the partnership ending within or with his taxable year are excluded or none of the payments are excluded. Subdivision (ii) of this subparagraph has application only to obligations from other partners in their capacity as partners as distinguished from an obligation which arose and exists from a transaction unrelated to the partnership or to a trade or business carried on by the partnership. The effect of the conditions set forth in subdivisions (ii) and (iii) of this subparagraph is that the exclusion may apply with respect to payments received by a retired partner during the taxable year of the partnership ending within or with his taxable year only if at the close of the partnership's taxable year the retired partner had no financial interest in the partnership except for the right to retirement payments.

(2) *Examples*. The application of subparagraph (1) of this paragraph may be illustrated by the following examples. Each example assumes that the partnership plan pursuant to which the payments are made meets the requirements of paragraph (b) of this section.

Example (1). A, who files his income tax returns on a calendar year basis, is a partner in the ABC partnership. The taxable year of the partnership is the period July 1 to June 30, inclusive. A retired from the partnership on January 1, 1973, and receives monthly payments on account of his retirement. As of June 30, 1973, no obligation existed from the other partners to A (except with respect to retirement payments under the plan) and A's share of the capital of the partnership had been paid to him in full. The monthly retirement payments received by A from the partnership in his taxable year ending on December 31, 1973, are not excluded from net earnings from self-employment since A rendered service to the partnership during a portion of the partnership's taxable year (July 1, 1972, through June 30, 1973) which ends within A's taxable year ending on December 31, 1973.

Example (2). D, a partner in the DEF partnership, retired from the partnership as of the close of December 31, 1972. The taxable year of both D and the partnership is the calendar year. During the partnership's taxable year ending December 31, 1973, D rendered no service with respect to any trade or business carried on by the partnership. On or before December 31, 1973, all obligations (other than with respect to retirement payments under the plan) from the other partners to D have been liquidated, and D's share of the capital of the partnership has been paid to him. Retirement payments received by D pursuant to the partnership's plan in his taxable year ending December 31, 1973, are excluded in determining his net earnings from self-employment (if any) for that taxable year.

Example (3). Assume the same facts as in example (2) except that as of the close of December 31, 1973, D has a right to a fixed percentage of any amounts collected by the partnership after that date which are attributable to services rendered by him prior to his retirement for clients of the partnership. The monthly payments received by D in his taxable year ending December 31, 1973, are not excluded from net earnings from self-employment since as of the close of the partnership's taxable year which ends with D's taxable year, an obligation (other than an obligation with respect to retirement payments) exists from the other partners to D.

[T.D. 7333, 39 FR 44446, Dec. 24, 1974]

§ 1.1402(b)–1 Self-employment income.

(a) *In general*. Except for the exclusions in paragraphs (b) and (c) of this section and the exception in paragraph (d) of this section, the term ''self-employment income'' means the net earnings from self-employment derived by an individual during a taxable year.

(b) *Maximum self-employment income*—(1) *General rule*. Subject to the special rules described in subparagraph (2) of this paragraph, the maximum self-employment income of an individual for a taxable year (whether a period of 12 months or less) is:

(i) For any taxable year beginning in a calendar year after 1974, an amount equal to the contribution and benefit base (as determined under section 230 of the Social Security Act) which is effective for such calendar year; and

(ii) For any taxable year:

Ending before 1955	$3,600
Ending after 1954 and before 1959	4,200

Ending after 1958 and before 1966 4,800
Ending after 1965 and before 1968 6,600
Ending after 1967 and beginning before 1972.....7,800
Beginning after 1971 and before 1973 9,000
Beginning after 1972 and before 1974.....10,800
Beginning after 1973 and before 1975.....13,200

(2) *Special rules.* (i) If an individual is paid wages as defined in subparagraph (3) of this paragraph in a taxable year, the maximum self-employment income for such taxable year is computed as provided in subdivision (ii) or (iii) of this subparagraph.

(ii) If an individual is paid wages as defined in subparagraph (3) (i) or (ii) of this paragraph in a taxable year, the maximum self-employment income of such individual for such taxable year is the excess of the amounts indicated in subparagraph (1) of this paragraph over the amount of the wages, as defined in subparagraph (3) (i) and (ii) of this paragraph, paid to him during the taxable year. For example, if for his taxable year beginning in 1974, an individual has $15,000 of net earnings from self-employment and during such taxable year is paid $1,000 of wages as defined in section 3121(a) (see subparagraph (3)(i) of this paragraph), he has $12,200 ($13,200 −$1,000) of self-employment income for the taxable year.

(iii) For taxable years ending on or after December 31, 1968, wages, as defined in subparagraph (3)(iii) of this paragraph, are taken into account in determining the maximum self-employment income of an individual for purposes of the tax imposed under section 1401(b) (hospital insurance), but not for purposes of the tax imposed under section 1401(a) (old-age survivors, and disability insurance). If an individual is paid wages as defined in subparagraph (3)(iii) of this paragraph in a taxable year, his maximum self-employment income for such taxable year for purposes of the tax imposed under section 1401(a) is computed under subparagraph (1) of this paragraph or subdivision (ii) of this subparagraph (whichever is applicable), and his maximum self-employment income for such taxable year for purposes of the tax imposed under section 1401(b) is the excess of his section 1401(a) maximum self-employment income over the amount of wages, as defined in subparagraph (3)(iii) of this paragraph, paid to him during the taxable year. For purposes of this subdivision, wages as defined in subparagraph (3)(iii) of this paragraph are deemed paid to an individual in the period with respect to which the payment is made, that is, the period in which the compensation was earned or deemed earned within the meaning of section 3231(e). For an explanation of the term ''compensation'' and for provisions relating to when compensation is earned, see the regulations under section 3231(e) in part 31 of this chapter (Employment Tax Regulations). The application of the rules set forth in this subdivision may be illustrated by the following example:

Example. M, a calendar-year taxpayer, has $15,000 of net earnings from self-employment for 1974 and during the taxable year is paid $1,000 of wages as defined in section 3121(a) (see subparagraph (3)(i) of this paragraph) and $1,600 of compensation subject to tax under section 3201 (see subparagraph (3)(iii) of this paragraph). Of the $1,600 of taxable compensation, $1,200 represents compensation for services rendered in 1974 and the balance ($400) represents compensation which pursuant to the provisions of section 3231(e) is earned or deemed earned in 1973. M's maximum self-employment income for 1974 for purposes of the tax imposed under section 1401(a), computed as provided in subdivision (ii) of this subparagraph, is $12,200 ($13,200 − $1,000), and for purposes of the tax imposed under section 1401(b) is $11,000 ($12,200 − $1,200). However, M may recompute his maximum self-employment income for 1973 for purposes of the tax imposed under section 1401(b) by taking into account the $400 of compensation which is deemed paid in 1973.

(3) *Meaning of term ''wages''.* For the purpose of the computation described in subparagraph (2) of this paragraph, the term ''wages'' includes:

(i) Wages as defined in section 3121(a);

(ii) Such remuneration paid to an employee for services covered by:

(a) An agreement entered into pursuant to section 218 of the Social Security Act (42 U.S.C. 418), which section provides for extension of the Federal old-age, survivors and disability insurance system to State and local government employees under voluntary agreements between the States and the Secretary of Health, Education, and

Welfare (Federal Security Administrator before April 11, 1953), or

(b) An agreement entered into pursuant to the provisions of section 3121(1), relating to coverage of citizens of the United States who are employees of foreign subsidiaries of domestic corporations,

as would be wages under section 3121(a) if such services constituted employment under section 3121(b). For an explanation of the term ''wages'', see the regulations under section 3121(a) in part 31 of this chapter (Employment Tax Regulations); and

(iii) Compensation, as defined in section 3231(e), which is subject to the employee tax imposed by section 3201 or the employee representative tax imposed by section 3211.

(c) *Minimum net earnings from self-employment.* Self-employment income does not include the net earnings from self-employment of an individual when the amount of such earnings for the taxable year is less than $400. Thus, an individual having only $300 of net earnings from self-employment for the taxable year would not have any self-employment income. However, an individual having net earnings from self-employment of $400 or more for the taxable year may, by application of paragraph (b)(2) of this section, have less than $400 of self-employment income for purposes of the tax imposed under section 1401(a) and the tax imposed under section 1401(b) or may have self-employment income of $400 or more for purposes of the tax imposed under section 1401(a) and of less than $400 for purposes of the tax imposed under section 1401(b). This could occur in a case in which the amount of the individual's net earnings from self-employment is $400 or more for a taxable year and the amount of such net earnings from self-employment plus the amount of wages, as defined in paragraph (b)(3) of this section, paid to him during the taxable year exceed the maximum self-employment income, as set forth in paragraph (b)(1) of this section, for the taxable year. However, the result occurs only if such maximum self-employment income exceeds the amount of such wages. The application of this paragraph may be illustrated by the following example:

Example. For 1974 M, a calendar-year taxpayer, has net earnings from self-employment of $2,000 and wages (as defined in paragraph (b)(3) (i) and (ii) of this section) of $12,500. Since M's net earnings from self-employment plus his wages exceed the maximum self-employment income for 1974 ($13,200), his self-employment income for 1974 is $700 ($13,200 − $12,500). If M also had wages, as defined in paragraph (b)(3)(iii) of this section, of $200, his self-employment income would be $700 for purposes of the tax imposed under section 1401(a) and $500 ($13,200 − $12,700 ($12,500+$200)) for purposes of the tax imposed under section 1401(b).

For provisions relating to when wages as defined in paragraph (b)(3)(iii) of this section are treated as paid, see paragraph (b)(2)(iii) of this section.

(d) *Nonresident aliens.* A nonresident alien individual never has self-employment income. While a nonresident alien individual who derives income from a trade or business carried on within the United States, Puerto Rico, the Virgin Islands, Guam, or American Samoa (whether by agents or employees, or by a partnership of which he is a member) may be subject to the applicable income tax provisions on such income, such nonresident alien individual will not be subject to the tax on self-employment income, since any net earnings which he may have from self-employment do not constitute self-employment income. For the purpose of the tax on self-employment income, an individual who is not a citizen of the United States but who is a resident of the Commonwealth of Puerto Rico, the Virgin Islands, or, for taxable years beginning after 1960, of Guam or American Samoa is not considered to be a nonresident alien individual.

[T.D. 6691, 28 FR 12796, Dec. 3, 1963, as amended by T.D. 7333, 39 FR 44447, Dec. 24, 1974]

§ 1.1402(c)–1 Trade or business.

In order for an individual to have net earnings from self-employment, he must carry on a trade or business, either as an individual or as a member of a partnership. Except for the exclusions discussed in §§ 1.1402(c)–2 to 1.1402(c)–7, inclusive, the term ''trade or business'', for the purpose of the tax on self-employment income, shall have the same meaning as when used in section 162. An individual engaged in one of the excluded activities specified in

such sections of the regulations may also be engaged in carrying on activities which constitute a trade or business for purposes of the tax on self-employment income. Whether or not he is also engaged in carrying on a trade or business will be dependent upon all of the facts and circumstances in the particular case. An individual who is a crew leader, as defined in section 3121(o) (see such section and the regulations thereunder in part 31 of this chapter (Employment Tax Regulations)), is considered to be engaged in carrying on a trade or business with respect to services performed by him after 1956 in furnishing individuals to perform agricultural labor for another person or services performed by him after 1956 as a member of the crew.

[T.D. 6978, 33 FR 15937, Oct. 30, 1968]

§ 1.1402(c)–2 Public office.

(a) *In general*—(1) *General rule*. Except as otherwise provided in subparagraph (2) of this paragraph, the performance of the functions of a public office does not constitute a trade or business.

(2) *Fee basis public officials*—(i) *In general*. If an individual receives fees after 1967 for the performance of the functions of a public office of a State or a political subdivision thereof for which he is compensated solely on a fee basis, and if the service performed in such office is eligible for (but is not made the subject of) an agreement between the State and the Secretary of Health, Education, and Welfare pursuant to section 218 of the Social Security Act to extend social security coverage thereto, the service for which such fees are received constitutes a trade or business within the meaning of section 1402(c) and § 1.1402(c)–1. If an individual performs service for a State or a political subdivision thereof in any period in more than one position, each position is treated separately for purposes of the preceding sentence. See also paragraph (f) of § 1.1402(c)–3 relating to the performance of service by an individual as an employee of a State or a political subdivision thereof in a position compensated solely on a fee basis.

(ii) *Election with respect to fees received in 1968*. (A) Any individual who in 1968 receives fees for service performed by him with respect to the functions of a public office of a State or a political subdivision thereof in any period in which the functions are performed in a position compensated solely on a fee basis may elect, if the performance of the service for which such fees are received constitutes a trade or business pursuant to the provisions of subdivision (i) of this subparagraph, to have such performance of service treated as excluded from the term ''trade or business'' for the purpose of the tax on self-employment income, pursuant to the provisions of section 122(c)(2) of the Social Security Amendments of 1967 (as quoted in § 1.1402(c)). Such election shall not be limited to service to which the fees received in 1968 are attributable but must also be applicable to service (if any) in subsequent years which, except for the election, would constitute a trade or business pursuant to the provisions of subdivision (i) of this subparagraph. An election made pursuant to the provisions of this subparagraph is irrevocable.

(B) The election referred to in subdivision (ii)(A) of this subparagraph shall be made by filing a certificate of election of exemption (Form 4415) on or before the due date of the income tax return (see section 6072), including any extension thereof (see section 6081), for the taxable year of the individual making the election which begins in 1968. The certificate of election of exemption shall be filed with an internal revenue office in accordance with the instructions on the certificate.

(b) *Meaning of public office*. The term ''public office'' includes any elective or appointive office of the United States or any possession thereof, of the District of Columbia, of a State or its political subdivisions, or a wholly-owned instrumentality of any one or more of the foregoing. For example, the President, the Vice President, a governor, a mayor, the Secretary of State, a member of Congress, a State representative, a county commissioner, a judge, a justice of the peace, a county or city attorney, a marshal, a sheriff, a constable, a registrar of deeds, or a notary public performs the functions of a public office. (However, the service of a notary public could not be made the subject of a section 218 agreement under

the Social Security Act because notaries are not ''employees'' within the meaning of that section. Accordingly, such service does not constitute a trade or business.)

[T.D. 7333, 39 FR 44448, Dec. 24, 1974, as amended by T.D. 7372, 40 FR 30945, July 24, 1975]

§ 1.1402(c)–3 Employees.

(a) *General rule*. Generally, the performance of service by an individual as an employee, as defined in the Federal Insurance Contributions Act (Chapter 21 of the Internal Revenue Code) does not constitute a trade or business within the meaning of section 1402(c) and § 1.1402(c)–1. However, in six cases set forth in paragraphs (b) to (g), inclusive, of this section, the performance of service by an individual is considered to constitute a trade or business within the meaning of section 1402(c) and § 1.1402(c)–1. (As to when an individual is an employee, see section 3121 (d) and (o) and section 3506 and the regulations under those sections in part 31 of this chapter (Employment Tax Regulations).)

(b) *Newspaper vendors*. Service performed by an individual who has attained the age of 18 constitutes a trade or business for purposes of the tax on self-employment income within the meaning of section 1402(c) and § 1.1402(c)–1 if performed in, and at the time of, the sale of newspapers or magazines to ultimate consumers, under an arrangement under which the newspapers or magazines are to be sold by him at a fixed price, his compensation being based on the retention of the excess of such price over the amount at which the newspapers or magazines are charged to him, whether or not he is guaranteed a minimum amount of compensation for such service, or is entitled to be credited with the unsold newspapers or magazines turned back.

(c) *Sharecroppers*. Service performed by an individual under an arrangement with the owner or tenant of land pursuant to which:

(1) Such individual undertakes to produce agricultural or horticultural commodities (including livestock, bees, poultry, and fur-bearing animals and wildlife) on such land,

(2) The agricultural or horticultural commodities produced by such individual, or the proceeds therefrom, are to be divided between such individual and such owner or tenant, and

(3) The amount of such individual's share depends on the amount of the agricultural or horticultural commodities produced, constitutes a trade or business within the meaning of section 1402(c) and § 1.1402(c)–1.

(d) *Employees of foreign government, instrumentality wholly owned by foreign government, or international organization*. Service performed in the United States, as defined in section 3121(e)(2) (see such section and the regulations thereunder in part 31 of this chapter (Employment Tax Regulations)), by an individual who is a citizen of the United States constitutes a trade or business within the meaning of section 1402(c) and § 1.1402(c)–1 if such service is excepted from employment, for purposes of the Federal Insurance Contributions Act (chapter 21 of the Code), by:

(1) Section 3121(b)(11), relating to service in the employ of a foreign government (for regulations under section 3121(b)(11), see § 31.3121(b)(11)–1 of this chapter);

(2) Section 3121(b)(12), relating to service in the employ of an instrumentality wholly owned by a foreign government (for regulations under section 3121(b)(12), see § 31.3121(b)(12)–1 of this chapter); or

(3) Section 3121(b)(15), relating to service in the employ of an international organization (for regulations under section 3121(b)(15), see § 31.3121(b)(15)–1 of this chapter).

This paragraph is applicable to service performed in any taxable year ending on or after December 31, 1960, except that it does not apply to service performed before 1961 in Guam or American Samoa.

(e) *Ministers and members of religious orders*—(1) *Taxable years ending before 1968*. Service described in section 1402(c)(4) performed by an individual during taxable years ending before 1968 for which a certificate filed pursuant to section 1402(e) is in effect constitutes a trade or business within the meaning of section 1402(c) and § 1.1402(c)–1. See also § 1.1402(c)–5.

(2) *Taxable years ending after 1967.* Service described in section 1402(c)(4) performed by an individual during taxable years ending after 1967 constitutes a trade or business within the meaning of section 1402(c) and § 1.1402(c)–1 unless an exemption under section 1402(e) (see §§ 1.1402(e)–1A through 1.1402(e)–4A) is effective with respect to such individual for the taxable year during which the service is performed. See also § 1.1402(c)–5.

(f) *State and local government employees compensated on fee basis*—(1) *In general.* (i) Section 1402(c)(2)(E) and this paragraph are applicable only with respect to fees received by an individual after 1967 for service performed by him as an employee of a State or a political subdivision thereof in a position compensated solely on a fee basis. If an individual performs service for a State or a political subdivision thereof in more than one position, each position is treated separately for purposes of determining whether the service performed in such position is performed by an employee and whether compensation for service performed in the position is solely on a fee basis.

(ii) If an individual receives fees after 1967 for service performed by him as an employee of a State or a political subdivision thereof in a position compensated solely on a fee basis, the service for which such fees are received constitutes a trade or business within the meaning of section 1402(c) and § 1.1402(c)–1 except that if service performed in such position is covered under an agreement entered into by the State and the Secretary of Health, Education, and Welfare pursuant to section 218 of the Social Security Act at the time a fee is received, the service to which such fee relates does not constitute a trade or business. See also paragraph (a) of § 1.1402(c)–2, relating, in part, to the performance of the functions of a public office of a State or a political subdivision thereof by an individual.

(2) *Election with respect to fees received in 1968.* (i) Any individual who in 1968 receives fees for service as an employee of a State or a political subdivision thereof in a position compensated solely on a fee basis may elect, if the performance of the service for which such fees are received constitutes a trade or business pursuant to the provisions of subparagraph (1) of this paragraph, to have such performance of service treated as excluded from the term ''trade or business'' for the purpose of the tax on self-employment income, pursuant to the provisions of section 122(c)(2) of the Social Security Amendments of 1967 (as quoted in § 1.1402(c)). Such election shall not be limited to service to which the fees received in 1968 are attributable but must also be applicable to service (if any) in subsequent years which, except for the election, would constitute a trade or business pursuant to the provisions of subparagraph (1) of this paragraph. An election made pursuant to the provisions of this subparagraph is irrevocable.

(ii) The election referred to in subdivision (i) of this subparagraph shall be made by filing a certificate of election of exemption (Form 4415) on or before the due date of the income tax return (see section 6072), including any extension thereof (see section 6081), for the taxable year of the individual making the election which begins in 1968. The certificate of election of exemption shall be filed with an internal revenue office in accordance with the instructions on the certificate.

(g) *Individuals engaged in fishing.* For taxable years ending after December 31, 1954, service performed by an individual on a boat engaged in catching fish or other forms of aquatic animal life (hereinafter ''fish'') constitutes a trade or business within the meaning of section 1402(c) and § 1.1402(c)–1 if the service is excepted from the definition of employment by section 3121(b)(20) and § 31.3121(b)(20)–1(a). However, the preceding sentence does not apply to services performed after December 31, 1954, and before October 4, 1976, on a boat engaged in catching fish if the owner or operator of the boat treated the individual as an employee in the manner described in § 31.3121(b)(20)–1(b).

[T.D. 6691, 28 FR 12796, Dec. 3, 1963, as amended by T.D. 6978, 33 FR 15937, Oct. 30, 1968; T.D. 7333, 39 FR 44448, Dec. 24, 1974; T.D. 7691, 45 FR 24129, Apr. 9, 1980; T.D. 7716, 45 FR 57123, Aug. 27, 1980]

§ 1.1402(c)–4 Individuals under Railroad Retirement System.

The performance of service by an individual as an employee or employee representative as defined in section 3231(b) and (c), respectively (see §§ 31.3231(b)–1 and 31.3231(c)–1 of Part 31 of this chapter (Employment Tax Regulations)), that is, an individual covered under the railroad retirement system, does not constitute a trade or business.

§ 1.1402(c)–5 Ministers and members of religious orders.

(a) *In general*—(1) *Taxable years ending before 1968.* For taxable years ending before 1955, a duly ordained, commissioned, or licensed minister of a church or a member of a religious order is not engaged in carrying on a trade or business with respect to service performed by him in the exercise of his ministry or in the exercise of duties required by such order. However, for taxable years ending after 1954 and before 1968, any individual who is a duly ordained, commissioned, or licensed minister of a church or a member of a religious order (other than a member of a religious order who has taken a vow of poverty as a member of such order) may elect, as provided in § 1.1402(e)(1)–1, to have the Federal old-age, survivors, and disability insurance system established by title II of the Social Security Act extended to service performed by him in his capacity as such a minister or member. If such a minister or a member of a religious order makes an election pursuant to § 1.1402(e)(1)–1 he is, with respect to service performed by him in such capacity, engaged in carrying on a trade or business for each taxable year to which the election is effective. An election by a minister or member of a religious order has no application to service performed by such minister or member which is not in the exercise of his ministry or in the exercise of duties required by such order.

(2) *Taxable years ending after 1967.* For any taxable year ending after 1967, a duly ordained, commissioned, or licensed minister of a church or a member of a religious order (other than a member of a religious order who has taken a vow of poverty as a member of such order) is engaged in carrying on a trade or business with respect to service performed by him in the exercise of his ministry or in the exercise of duties required by such order unless an exemption under section 1402(e) (see §§ 1.1402(e)–1A through 1.1402(e)–4A) is effective with respect to such individual for the taxable year during which the service is performed. An exemption which is effective with respect to a minister or a member of a religious order has no application to service performed by such minister or member which is not in the exercise of his ministry or in the exercise of duties required by such order.

(b) *Service by a minister in the exercise of his ministry.* (1)(i) A certificate of election filed by a duly ordained, commissioned, or licensed minister of a church under the provisions of § 1.1402(e)(1)–1 has application only to service performed by him in the exercise of his ministry.

(ii) An exemption under section 1402(e) (see §§ 1.1402(e)–1A through 1.1402(e)–4A) which is effective with respect to a duly ordained, commissioned, or licensed minister of a church has application only to service performed by him in the exercise of his ministry.

(2) Except as provided in paragraph (c)(3) of this section, service performed by a minister in the exercise of his ministry includes the ministration of sacerdotal functions and the conduct of religious worship, and the control, conduct, and maintenance of religious organizations (including the religious boards, societies, and other integral agencies of such organizations), under the authority of a religious body constituting a church or church denomination. The following rules are applicable in determining whether services performed by a minister are performed in the exercise of his ministry:

(i) Whether service performed by a minister constitutes the conduct of religious worship or the ministration of sacerdotal functions depends on the tenets and practices of the particular religious body constituting his church or church denomination.

(ii) Service performed by a minister in the control, conduct, and maintenance of a religious organization relates to directing, managing, or promoting the activities of such organization. Any religious organization is deemed to be under the authority of a religious body constituting a church or church denomination if it is organized and dedicated to carrying out the tenets and principles of a faith in accordance with either the requirements or sanctions governing the creation of institutions of the faith. The term ''religious organization'' has the same meaning and application as is given to the term for income tax purposes.

(iii) If a minister is performing service in the conduct of religious worship or the ministration of sacerdotal functions, such service is in the exercise of his ministry whether or not it is performed for a religious organization. The application of this rule may be illustrated by the following example:

Example. M, a duly ordained minister, is engaged to perform service as chaplain at N University. M devotes his entire time to performing his duties as chaplain which include the conduct of religious worship, offering spiritual counsel to the university students, and teaching a class in religion. M is performing service in the exercise of his ministry.

(iv) If a minister is performing service for an organization which is operated as an integral agency of a religious organization under the authority of a religious body constituting a church or church denomination, all service performed by the minister in the conduct of religious worship, in the ministration of sacerdotal functions, or in the control, conduct, and maintenance of such organization (see subparagraph (2)(ii) of this paragraph) is in the exercise of his ministry. The application of this rule may be illustrated by the following example:

Example. M, a duly ordained minister, is engaged by the N Religious Board to serve as director of one of its departments. He performs no other service. The N Religious Board is an integral agency of O, a religious organization operating under the authority of a religious body constituting a church denomination. M is performing service in the exercise of his ministry.

(v) If a minister, pursuant to an assignment or designation by a religious body constituting his church, performs service for an organization which is neither a religious organization nor operated as an integral agency of a religious organization, all service performed by him, even though such service may not involve the conduct of religious worship or the ministration of sacerdotal functions, is in the exercise of his ministry. The application of this rule may be illustrated by the following example:

Example. M, a duly ordained minister, is assigned by X, the religious body constituting his church, to perform advisory service to Y Company in connection with the publication of a book dealing with the history of M's church denomination. Y is neither a religious organization nor operated as an integral agency of a religious organization. M performs no other service for X or Y. M is performing service in the exercise of his ministry.

(c) *Service by a minister not in the exercise of his ministry.* (1)(i) A certificate filed by a duly ordained, commissioned, or licensed minister of a church under the provisions of §1.1402(e)(1)–1 has no application to service performed by him which is not in the exercise of his ministry.

(ii) An exemption under section 1402(e) (see §§1.1402(e)–1A through 1.1402(e)–4A) which is effective with respect to a duly ordained, commissioned, or licensed minister of a church has no application to service performed by him which is not in the exercise of his ministry.

(2) If a minister is performing service for an organization which is neither a religious organization nor operated as an integral agency of a religious organization and the service is not performed pursuant to an assignment or designation by his ecclesiastical superiors, then only the service performed by him in the conduct of religious worship or the ministration of sacerdotal functions is in the exercise of his ministry. See, however, subparagraph (3) of this paragraph. The application of the rule in this subparagraph may be illustrated by the following example:

Example. M, a duly ordained minister, is engaged by N University to teach history

and mathematics. He performs no other service for N although from time to time he performs marriages and conducts funerals for relatives and friends. N University is neither a religious organization nor operated as an integral agency of a religious organization. M is not performing the service for N pursuant to an assignment or designation by his ecclesiastical superiors. The service performed by M for N University is not in the exercise of his ministry. However, service performed by M in performing marriages and conducting funerals is in the exercise of his ministry.

(3) Service performed by a duly ordained, commissioned, or licensed minister of a church as an employee of the United States, or a State, Territory, or possession of the United States, or the District of Columbia, or a foreign government, or a political subdivision of any of the foregoing, is not considered to be in the exercise of his ministry for purposes of the tax on self-employment income, even though such service may involve the ministration of sacerdotal functions or the conduct of religious worship. Thus, for example, service performed by an individual as a chaplain in the Armed Forces of the United States is considered to be performed by a commissioned officer in his capacity as such, and not by a minister in the exercise of his ministry. Similarly, service performed by an employee of a State as a chaplain in a State prison is considered to be performed by a civil servant of the State and not by a minister in the exercise of his ministry.

(d) *Service in the exercise of duties required by a religious order*—(1) *Certificate of election*. A certificate of election filed by a member of a religious order (other than a member of a religious order who has taken a vow of poverty as a member of such order) under the provisions of § 1.1402(e)(1)–1 has application to all duties required of him by such order.

(2) *Exemption*. An exemption under section 1402(e) (see §§ 1.1402(e)–1A through 1.1402(e)–4A) which is effective with respect to a member of a religious order (other than a member of a religious order who has taken a vow of poverty as a member of such order) has application only to the duties required of him by such order.

(3) *Service*. For purposes of subparagraphs (1) and (2) of this paragraph, the nature or extent of the duties required of the member by the order is immaterial so long as it is a service which he is directed or required to perform by his ecclesiastical superiors.

[T.D. 6691, 28 FR 12796, Dec. 3, 1963, as amended by T.D. 6978, 33 FR 15937, Oct. 30, 1968]

§ 1.1402(c)–6 Members of certain professions.

(a) *Periods of exclusion*—(1) *Taxable years ending before 1955*. For taxable years ending before 1955, an individual is not engaged in carrying on a trade or business with respect to the performance of service in the exercise of his profession as a physician, lawyer, dentist, osteopath, veterinarian, chiropractor, naturopath, optometrist, Christian Science practitioner, architect, certified public accountant, accountant registered or licensed as an accountant under State or municipal law, full-time practicing public accountant, funeral director, or professional engineer.

(2) *Taxable years ending in 1955*. Except as provided in paragraph (b) of this section, for a taxable year ending in 1955 an individual is not engaged in carrying on a trade or business with respect to the performance of service in the exercise of his profession as a physician, lawyer, dentist, osteopath, veterinarian, chiropractor, naturopath, optometrist, or Christian Science practitioner.

(3) *Taxable years ending after 1955*—(i) *Doctors of medicine*. For taxable years ending after 1955 and before December 31, 1965, and individual is not engaged in carrying on a trade or business with respect to the performance of service in the exercise of his profession as a doctor of medicine. For taxable years ending after December 30, 1965, an individual is engaged in carrying on a trade or business with respect to the performance of service in the exercise of his profession as a doctor of medicine.

(ii) *Christian Science practitioners*. Except as provided in paragraph (b)(1) of this section, for taxable years ending after 1955 and before 1968, an individual is not engaged in carrying on a trade or business with respect to the performance of service in the exercise of his

profession as a Christian Science practitioner. For provisions relating to the performance of service in taxable years ending after 1967 by an individual in the exercise of his profession as a Christian Science practitioner, see paragraph (b)(2) of this section.

(b) *Christian Science practitioner*—(1) *Certain taxable years ending before 1968; election.* For taxable years ending after 1954 and before 1968, a Christian Science practitioner may elect, as provided in § 1.1402(e)(1)–1, to have the Federal old-age, survivors, and disability insurance system established by title II of the Social Security Act extended to service performed by him in the exercise of his profession as a Christian Science practitioner. If an election is made pursuant to § 1.1402(e)(1)–1, the Christian Science practitioner is, with respect to the performance of service in the exercise of such profession, engaged in carrying on a trade or business for each taxable year for which the election is effective. An election by a Christian Science practitioner has no application to service performed by him which is not in the exercise of his profession as a Christian Science practitioner.

(2) *Taxable years ending after 1967; exemption.* For a taxable year ending after 1967, a Christian Science practitioner is, with respect to the performance of service in the exercise of his profession as a Christian Science practitioner, engaged in carrying on a trade or business unless an exemption under section 1402(e) (see §§ 1.1402(e)–1A through 1.1402(e)–4A) is effective with respect to him for the taxable year during which the service is performed. An exemption which is effective with respect to a Christian Science practitioner has no application to service performed by him which is not in the exercise of his profession as a Christian Science practitioner.

(c) *Meaning of terms.* The designations in this section are to be given their commonly accepted meanings. For taxable years ending after 1955, an individual who is a doctor of osteopathy, and who is not a doctor of medicine within the commonly accepted meaning of that term, is deemed, for purposes of this section, not to be engaged in carrying on a trade or business in the exercise of the profession of doctor of medicine.

(d) *Legal requirements.* The exclusions specified in paragraph (a) of this section apply only if the individuals meet the legal requirements, if any, for practicing their professions in the place where they perform the service.

(e) *Partnerships.* In the case of a partnership engaged in the practice of any of the designated excluded professions, the partnership shall not be considered as carrying on a trade or business for the purpose of the tax on self-employment income, and none of the distributive shares of the income or loss, described in section 702(a)(9), of such partnership shall be included in computing net earnings from self-employment of any member of the partnership. On the other hand, where a partnership is engaged in a trade or business not within any of the designated excluded professions, each partner must include his distributive share of the income or loss, described in section 702(a)(9), of such partnership in computing his net earnings from self-employment, irrespective of whether such partner is engaged in the practice of one or more of such professions and contributes his professional services to the partnership.

[T.D. 6691, 28 FR 12796, Dec. 3, 1963, as amended by T.D. 6978, 33 FR 15938, Oct. 30, 1968]

§ 1.1402(c)–7 Members of religious groups opposed to insurance.

The performance of service by an individual:

(a) Who is a member of a recognized religious sect or division thereof, and

(b) Who is an adherent of established tenets or teachings of such sect or division by reason of which he is conscientiously opposed to acceptance of the benefits of any private or public insurance which makes payments in the event of death, disability, old age, or retirement or makes payments toward the cost of, or provides services for, medical care (including the benefits of any insurance system established by the Social Security Act),

during any taxable year for which he is granted a tax exemption, pursuant to section 1402(h), does not constitute a trade or business within the meaning

of section 1402(c) and § 1.1402(c)–1. See also §§ 1.1402(h) and 1.1402(h)–1.

[T.D. 6993, 34 FR 830, Jan. 18, 1969]

§ 1.1402(d)–1 Employee and wages.

For the purpose of the tax on self-employment income, the term ''employee'' and the term ''wages'' shall have the same meaning as when used in the Federal Insurance Contributions Act. For an explanation of these terms, see Subpart B of Part 31 of this chapter (Employment Tax Regulations).

§ 1.1402(e)–1A Application of regulations under section 1402(e).

The regulations in §§ 1.1402(e)–2A through 1.1402(e)–4A relate to section 1402(e) as amended by section 115(b)(2) of the Social Security Amendments of 1967 (81 Stat. 839) and apply to taxable years ending after 1967. Section 1.1402(e)–5A reflects changes made by section 1704(a) of the Tax Reform Act of 1986 (100 Stat. 2085, 2779) and applies to applications for exemption under section 1402(e) filed after December 31, 1986. For regulations under section 1402(e) (as in effect prior to amendment by the Social Security Amendments of 1967) applicable to taxable years ending before 1968, see §§ 1.1402(e)(1)–1 through 1.1402(e)(6)–1.

[T.D. 8221, 53 FR 33461, Aug. 31, 1988]

§ 1.1402(e)–2A Ministers, members of religious orders and Christian Science practitioners; application for exemption from self-employment tax.

(a) *In general.* (1) Subject to the limitations set forth in subparagraphs (2) and (3) of this paragraph, any individual who is (i) a duly ordained, commissioned, or licensed minister of a church or a member of a religious order (other than a member of a religious order who has taken a vow of poverty as a member of such order) or (ii) a Christian Science practitioner may request an exemption from the tax on self-employment income (see section 1401 and § 1.1401–1) with respect to services performed by him in his capacity as a minister or member, or as a Christian Science practitioner, as the case may be. Such a request shall be made by filing an application for exemption on Form 4361 in the manner provided in paragraph (b) of this section and within the time specified in § 1.1402(e)–3A. For provisions relating to the taxable year or years for which an exemption from the tax on self-employment income with respect to service performed by a minister or member or a Christian Science practitioner in his capacity as such is effective, see § 1.1402(e)–4A. For additional provisions applicable to services performed by individuals referred to in this subparagraph, see paragraph (e) of § 1.1402(c)–3 and § 1.1402(c)–5 relating to ministers and members of religious orders, and paragraphs (a)(3)(ii) and (b) of § 1.1402(c)–6 relating to Christian Science practitioners.

(2) The application for exemption shall contain, or there shall be filed with such application, a statement to the effect that the individual making application for exemption is conscientiously opposed to, or because of religious principles is opposed to, the acceptance (with respect to services performed by him in his capacity as a minister, member, or Christian Science practitioner) of any public insurance which makes payments in the event of death, disability, old age, or retirement or makes payments toward the cost of, or provides services for, medical care (including the benefits of any insurance system established by the Social Security Act). Thus, ministers, members of religious orders, and Christian Science practitioners requesting exemption from social security coverage must meet either of two alternative tests: (1) A religious principles test which refers to the institutional principles and discipline of the particular religious denomination to which he belongs, or (2) a conscientious opposition test which refers to the opposition because of religious considerations of individual ministers, members of religious orders, and Christian Science practitioners (rather than opposition based upon the general conscience of any such individual or individuals). The term ''public insurance'', as used in section 1402(e) and this paragraph, refers to governmental, as distinguished from private, insurance and does not include insurance carried with a commercial insurance carrier. To be

eligible to file an application for exemption on Form 4361, a minister, member, or Christian Science practitioners need not be opposed to the acceptance of all public insurance making payments of this specified type; he must, however, be opposed on religious grounds to the acceptance of any such payment which, in whole or in part, is based on, or measured by earnings from, services performed by in his capacity as a minister or member (see § 1.1402(c)–5) or in his capacity as a Christian Science practitioner (see paragraph (b)(2) of § 1.1402(c)–6). For example, a minister performing service in the exercise of his ministry may be eligible to file an application for exemption on Form 4361 even though he is not opposed to the acceptance of benefits under the Social Security Act with respect to service performed by him which is not in the exercise of his ministry.

(3) An exemption from the tax imposed on self-employment income with respect to service performed by a minister, member, or Christian Science practitioner in his capacity as such may not be granted to a minister, member, or practitioner who (in accordance with the provisions of section 1402(e) as in effect prior to amendment by section 115(b)(2) of the Social Security Amendments of 1967 (81 Stat. 839)) filed a valid waiver certificate on Form 2031 electing to have the Federal old-age, survivors, and disability insurance system establish by title II of the Social Security Act extended to service performed by him in the exercise of his ministry or in the exercise of duties required by the order of which he is a member, or in the exercise of his profession as a Christian Science practitioner. For provisions relating to waiver certificates on Form 2031, see §§ 1.1402(e)(1)–1 through 1.1402(e)(6)–1.

(b) *Application for exemption.* An application for exemption on Form 4361 shall be filed in triplicate with the internal revenue officer or the internal revenue office, as the case may be, designated in the instructions relating to the application for exemption. The application for exemption must be filed within the time prescribed in § 1.1402(e)–3A. If the last original Federal income tax return of an individual to whom paragraph (a) of this section applies which was filed before the expiration of such time limitation for filing an application for exemption shows no liability for tax on self-employment income, such return will be treated as an application for exemption, provided that before February 28, 1975 such individual also files a properly executed Form 4361.

(c) *Approval of application for exemption.* The filing of an application for exemption on Form 4361 by a minister, a member of a religious order, or a Christian Science practitioner does not constitute an exemption from the tax on self-employment income with respect to services performed by him in his capacity as a minister, member, or practitioner. The exemption is granted only if the application is approved by an appropriate internal revenue officer. See § 1.1402(e)–4A relating to the period for which an exemption is effective.

[T.D. 7333, 39 FR 44448, Dec. 24, 1974; 39 FR 45216, Dec. 31, 1974]

§ 1.1402(e)–3A Time limitation for filing application for exemption.

(a) *General rule.* (1) Any individual referred to in paragraph (a) of § 1.1402(e)–2A who desires an exemption from the tax on self-employment income with respect to service performed by him in his capacity as a minister or member of a religious order or as a Christian Science practitioner must file the application for exemption (Form 4361) prescribed by § 1.1402(e)–2A on or before whichever of the following dates is later:

(i) The due date of the income tax return (see section 6072), including any extension thereof (see section 6081), for his second taxable year ending after 1967, or

(ii) The due date of the income tax return, including any extension thereof, for his second taxable year beginning after 1953 for which he has net earnings from self-employment of $400 or more, any part of which:

(a) In the case of a duly ordained, commissioned, or licensed minister of a church, consists of remuneration for service performed in the exercise of his ministry,

(b) In the case of a member of a religious order who has not taken a vow of

poverty as a member of such order, consists of remuneration for service performed in the exercise of duties required by such order, or

(c) In the case of a Christian Science practitioner, consists of remuneration for service performed in the exercise of his profession as a Christian Science practitioner.

See paragraph (c) of this section for provisions relating to the computation of net earnings from self-employment.

(2) If a minister, a member of a religious order, or a Christian Science practitioner derives gross income in a taxable year both from service performed in such capacity and from the conduct of another trade or business, and the deductions allowed by Chapter 1 of the Internal Revenue Code which are attributable to the gross income derived from service performed in such capacity equal or exceed the gross income derived from service performed in such capacity, no part of the net earnings from self-employment (computed as prescribed in paragraph (c) of this section) for the taxable year shall be considered as derived from service performed in such capacity.

(3) The application of the rules set forth in subparagraphs (1) and (2) of this paragraph may be illustrated by the following examples:

Example (1). M, who makes his income tax returns on a calendar year basis, was ordained as a minister in January 1960. During each of two or more taxable years ending before 1968 M has net earnings from self-employment in excess of $400 some part of which is from service performed in the exercise of his ministry. M has not filed an effective waiver certificate on Form 2031 (see paragraph (a)(3) of §1.1402(e)–2A). If M desires an exemption from the tax on self-employment income with respect to service performed in the exercise of his ministry, he must file an application for exemption on or before the due date of his income tax return for 1969 (his second taxable year ending after 1967), or any extension thereof.

Example (2). M, who makes his income tax returns on a calendar year basis, was ordained as a minister in January 1966. M has net earnings of $350 for the taxable year 1966 and has net earnings in excess of $400 for each of his taxable years 1967 and 1968 (some part or all of which is derived from service performed in the exercise of his ministry). M has not filed an effective waiver certificate on Form 2031 (see paragraph (a)(3) of §1.1402(e)–2A). If M desires an exemption from the tax on self-employment income with respect to service performed in the exercise of his ministry, he must file an application for exemption on or before the due date of his income tax return for 1969 (his second taxable year ending after 1967), or any extension thereof.

Example (3). Assume the same facts as in example (2) except that M has net earnings in excess of $400 for each of his taxable years 1967 and 1969 (but less than $400 in 1968). The application for exemption must be filed on or before the due date of his income tax return for 1969, or any extension thereof.

Example (4). M was ordained as a minister in May 1973. During each of the taxable years 1973 and 1975, M, who makes his income tax returns on a calendar year basis, derives net earnings in excess of $400 from his activities as a minister. M has net earnings of $350 for the taxable year 1974, $200 of which is derived from service performed by him in the exercise of his ministry. If M desires an exemption from the tax on self-employment income with respect to service performed in the exercise of his ministry, he must file an application for exemption on or before the due date of his income tax return for 1975, or any extension thereof.

Example (5). M, who was ordained a minister in January 1973, is employed as a toolmaker by the XYZ Corporation for the taxable years 1973 and 1974 and also engages in activities as a minister on weekends. M makes his income tax returns on the basis of a calendar year. During each of the taxable years 1973 and 1974 M receives wages of $14,000 from the XYZ Corporation and derives net earnings of $400 from his activities as a minister. If M desires an exemption from the tax on self-employment income with respect to service performed in the exercise of his ministry, he must file an application for exemption on or before the due date of his income tax return for 1974, or any extension thereof. It should be noted that although by reason of section 1402(b)(1) (G) and (H) no part of the $400 represents ''self-employment income'', nevertheless the entire $400 constitutes ''net earnings from self-employment'' for purposes of fulfilling the requirements of section 1402(e)(2).

Example (6). M, who files his income tax returns on a calendar year basis, was ordained as a minister in March 1973. During 1973 he receives $410 for service performed in the exercise of his ministry. In addition to his ministerial services, M is engaged during the year 1973 in a mercantile venture from which he derives net earnings from self-employment in the amount of $4,000. The expenses incurred by him in connection with his ministerial services during 1973 and which are allowable deductions under Chapter 1 of the Internal Revenue Code amount to $410. During 1974 and 1975, M has net earnings from self-employment in amounts of $4,600 and $4,800,

respectively, and some part of each of these amounts is from the exercise of his ministry. The deductions allowed in each of the years 1974 and 1975 by Chapter 1 which are attributable to the gross income derived by M from the exercise of his ministry in each of such years, respectively, do not equal or exceed such gross income in such year. If M desires an exemption from the tax on self-employment income with respect to service performed in the exercise of his ministry, he must file an application for exemption on or before the due date of his income tax return for 1975, or an extension thereof.

(b) *Effect of death.* The right of an individual to file an application for exemption shall cease upon his death. Thus, the surviving spouse, administrator, or executor of a decedent shall not be permitted to file an application for exemption for such decedent.

(c) *Computation of net earnings*—(1) *Taxable years ending before 1968.* For purposes of this section net earnings from self-employment for taxable years ending before 1968 shall be determined without regard to the fact that, without an election under section 1402(e) (as in effect prior to amendment by section 115(b)(2) of the Social Security Amendments of 1967, see § 1.1402(e)–1A), the performance of services by a duly ordained, commissioned, or licensed minister of a church in the exercise of his ministry, or by a member of a religious order in the exercise of duties required by such order, or the performance of service by an individual in the exercise of his profession as a Christian Science practitioner, does not constitute a trade or business for purposes of the tax on self-employment income.

(2) *Taxable years ending after 1967.* For purposes of this section and § 1.1402(e)–4A net earnings from self-employment for taxable years ending after 1967 shall be determined without regard to section 1402(c) (4) and (5). See § 1.1402(c)–3(e)(2) and § 1.1402(c)–5 relating to ministers and members of religious orders, and paragraphs (a)(3)(ii) and (b) of § 1.1402(c)–6 relating to Christian Science practitioners.

[T.D. 7333, 39 FR 44449, Dec. 24, 1974]

§ 1.1402(e)–4A Period for which exemption is effective.

(a) *In general.* If an application for exemption on Form 4361:

(1) Is filed by a minister, a member of a religious order, or a Christian Science practitioner eligible to file such an application (see particularly paragraph (a) (2) and (3) of § 1.1402(e)–2A), and

(2) Is approved (see paragraph (c) of § 1.1402(e)–2A),

the exemption from the tax on self-employment income shall be effective for the first taxable year ending after 1967 for which such minister, member, or practitioner has net earnings from self-employment of $400 or more any part of which was derived from the performance of service in his capacity as a minister, member, or practitioner, and for all succeeding taxable years. See, however, paragraphs (b)(1)(ii) and (d)(2) of § 1.1402(c)–5 relating to ministers and members of religious orders and paragraph (b)(2) of § 1.1402(c)–6 relating to Christian Science practitioners.

(b) *Exemption irrevocable.* An exemption granted to a minister, a member of a religious order, or a Christian Science practitioner pursuant to the provisions of section 1402(e) is irrevocable.

[T.D. 7333, 39 FR 44450, Dec. 24, 1974]

§ 1.1402(e)–5A Applications for exemption from self-employment taxes filed after December 31, 1986, by ministers, certain members of religious orders, and Christian Science practitioners.

(a) *In general.* (1) Except as provided in paragraph (a)(2) of this section, this section applies to any individual who is a duly ordained, commissioned, or licensed minister of a church, member of a religious order (other than a member of a religious order who has taken a vow of poverty as a member of such order), or a Christian Science practitioner who files an application after December 31, 1986, for exemption from the tax on self-employment income (see section 1401 and 1.1401–1) with respect to services performed by him or her in his or her capacity as a minister, member, or practitioner pursuant to §§ 1.1402(e)–2A through 1.1402(e)–4A. This section does not apply to applications for exemption under section 1402(e) that are filed before January 1, 1987.

(2) *Application of this section to Christian Science practitioners.* Paragraph (b)

of this section does not apply to Christian Science practitioners. Thus, Christian Science practitioners filing applications for exemption from self-employment taxes under section 1402(e) should follow the procedures set forth in §§1.1402(e)–2A through 1.1402(e)–4A, and are not required to include the statement described in paragraph (b)(1)(ii) of this section. However, see paragraph (c) of this section for verification procedures with respect to applications for exemption from self-employment taxes filed after December 31, 1986, by Christian Science practitioners.

(b) *Church or order must be informed*—(1) *In general.* Any individual, other than a Christian Science practitioner, who files an application for exemption from the tax on self-employment income under section 1402(e) after December 31, 1986:

(i) Shall file such application in accordance with the procedures set forth in §§1.1402(e)–2A through 1.1402(e)–4A, and

(ii) Shall include with such application a statement to the effect that the individual making application for exemption has informed the ordaining, commissioning, or licensing body of the church or order that he or she is opposed to the acceptance (for services performed as a minister or member of a religious order not under a vow of poverty) of any public insurance that makes payments in the event of death, disability, old age, or retirement, or that makes payments toward the cost of, or provides services for, medical care (including the benefits of any insurance system established by the Social Security Act).

(2) *Statement to be filed with form.* If the form provided by the Service for applying for exemption under 1402(e) does not contain the statement set forth in paragraph (b)(1)(ii) of this section, any individual required to include this statement with his or her application under this paragraph (b) shall file such statement with the individual's application at the time and place prescribed for filing such application under §§1.1402(e)–2A and 1.1402(e)–3A. The statement shall contain the information set forth in paragraph (b)(1)(ii) of this section and shall be signed by such individual under penalties of perjury.

(c) *Verification of application*—(1) *In general.* The Service will approve an application for an exemption filed by an individual to whom this section applies only after verifying that the individual applying for the exemption is aware of the grounds on which the individual may receive an exemption under section 1402(e) (See §1.1402(e)–2A) and that the individual seeks exemption on such grounds in accordance with the procedures set forth in paragraph (c)(2) of this section.

(2) *Verification procedure.* Upon receipt of an application for exemption from self-employment taxes under section 1402(e) and this section, the Service will mail to the applicant a statement that describes the grounds on which an individual may receive an exemption under section 1402(e). The individual filing the application shall certify that he or she has read the statement and that he or she seeks exemption from self-employment taxes on the grounds listed in the statement. The certification shall be made by signing a copy of the statement under penalties of perjury and mailing the signed copy to the Service Center from which the statement was issued not later than 90 days after the date on which the statement was mailed to the individual. If the signed copy of the statement is not mailed to the Service Center within 90 days of the date on which the statement was mailed to the individual, that individual's exemption will not be effective until the date that the signed copy of the statement is received at the Service Center.

[T.D. 8136, 52 FR 12162, Apr. 15, 1987, redesignated and amended at T.D. 8221, 53 FR 33461, Aug. 31, 1988]

§ 1.1402(e)(1)–1 Election by ministers, members of religious orders, and Christian Science practitioners for self-employment coverage.

(a) *In general.* Any individual who is (1) a duly ordained, commissioned, or licensed minister of a church or a member of a religious order (other than a member of a religious order who has taken a vow of poverty as a member of such order) or (2) a Christian Science

practitioner may elect to have the Federal old-age, survivors, and disability insurance system established by title II of the Social Security Act extended to service performed by him in the exercise of his ministry or in the exercise of duties required by such order, or in the exercise of his profession as a Christian Science practitioner, as the case may be. Such an election shall be made by filing a certificate on Form 2031 in the manner provided in paragraph (b) of this section and within the time specified in §1.1402(e)(2)–1. If a minister or member to whom this section has application, or a Christian Science practitioner, makes an election by filing Form 2031 such individual shall, for each taxable year for which the election is effective (see §1.1402(e)(3)–1), be considered as carrying on a trade or business with respect to the performance of service in his capacity as a minister or member, or as a Christian Science practitioner, as the case may be.

(b) *Waiver certificate*. The certificate on Form 2031 shall be filed in triplicate with the district director of internal revenue for the internal revenue district in which is located the legal residence or principal place of business of the individual who executes the certificate. If such individual has no legal residence or principal place of business in any internal revenue district, the certificate shall be filed with the Director of International Operations, Internal Revenue Service, Washington, DC 20225, or at such other address as is designated in the instructions relating to the certificate. The certificate must be filed within the time prescribed in §1.1402(e)(2)–1. If an individual to whom paragraph (a) of this section has application submits to a district director of internal revenue a dated and signed statement indicating that he desires to have the Federal old-age, survivors, and disability insurance system established by title II of the Social Security Act extended to his services, such statement will be treated as a waiver certificate, if filed within the time specified in §1.1402(e)(2)–1, provided that without unnecessary delay such statement is supplemented by a properly executed Form 2031. An application for a social security account number filed on Form SS–5 or the filing of an income tax return showing an amount representing self-employment income or self-employment tax shall not be construed to constitute an election referred to in §1.1402(e)(1)–1.

§ 1.1402(e)(2)–1 Time limitation for filing waiver certificate.

(a) *General rule*. (1) Any individual referred to in §1.1402(e)(1)–1 who desires to have the Federal old-age, survivors, and disability insurance system established by title II of the Social Security Act extended to his services must file the waiver certificate (Form 2031) prescribed by §1.1402(e)(1)–1 on or before whichever of the following dates is later:

(i) The due date of the income tax return (see section 6072), including any extension thereof (see section 6081), for his second taxable year ending after 1963; or

(ii) The due date of the income tax return, including any extension thereof, for his second taxable year ending after 1954 for which he has net earnings from self-employment (computed as prescribed in paragraph (c) of this section) of $400 or more, any part of which:

(a) In the case of a duly ordained, commissioned, or licensed minister of a church, consists of remuneration for service performed in the exercise of his ministry,

(b) In the case of a member of a religious order who has not taken a vow of poverty as a member of such order, consists of remuneration for service performed in the exercise of duties required by such order, or

(c) In the case of a Christian Science practitioner, consists of remuneration for service performed in the exercise of his profession as a Chrsitian Science practitioner.

(2) If a minister, a member of a religious order, or a Christian Science practitioner derives gross income in a taxable year both from service performed in such capacity and from the conduct of another trade or business, and the deductions allowed by chapter 1 of the Internal Revenue Code which are attributable to the gross income derived from service performed in such

capacity equal or exceed the gross income derived from service performed in such capacity, no part of the net earnings from self-employment (computed as prescribed in paragraph (c) of this section) for the taxable year shall be considered as derived from service performed in such capacity.

(3) The application of the rules set forth in subparagraphs (1) and (2) of this paragraph may be illustrated by the following examples:

Example (1). M was ordained as a minister in May 1963. During each of the taxable years 1963 and 1966, M, who makes his income tax returns on a calendar year basis, derives net earnings in excess of $400 from his activities as a minister. M has net earnings of $350 for each of the taxable years 1964 and 1965, $200 of which is derived from service performed by him as a minister. If M wishes to have the Federal old-age, survivors, and disability insurance system established by title II of the Social Security Act extended to his service as a minister, he must file the waiver certificate on or before the due date of his income tax return for 1966, or any extension thereof.

Example (2). M, who was ordained a minister in January 1965, is employed as a toolmaker by the XYZ Corporation for the taxable years 1965 and 1966 and also engages in activities as a minister on weekends. M makes his income tax return on the basis of a calendar year. During each of the taxable years 1965 and 1966, M receives wages of $4,800 from the XYZ Corporation and derives $400 (all of which constitutes net earnings from self-employment computed as prescribed in paragraph (c) of this section) from his activities as a minister. In such case if M wishes to have the Federal old-age, survivors, and disability insurance system established by title II of the Social Security Act extended to his services as a minister, he must file the waiver certificate on or before the due date of his income tax return for 1966, or any extension thereof. A waiver certificate filed after such date will be invalid. It should be noted that although by reason of section 1402(b)(1)(C) no part of the $400 for the taxable year 1965 represents ''self-employment income'', nevertheless the entire $400 constitutes ''net earnings from self-employment'' for purposes of fulfilling the requirements of section 1402(e)(2).

Example (3). M, who files his income tax returns on a calendar year basis, was ordained as a minister in June 1964. During 1964 he receives $410 for services performed in the exercise of his ministry. In addition to his ministerial services, M is engaged during the year 1964 in a mercantile venture from which he derives net earnings from self-employment in the amount of $1,000. The expenses incurred by him in connection with his ministerial services during 1964 and which are allowable deductions under Chapter 1 of the Internal Revenue Code amount to $410. During 1965 and 1966, M has net earnings from self-employment in amounts of $1,200 and $1,500, respectively, and some part of each of these amounts is from the exercise of his ministry. The deductions allowed in each of the years 1965 and 1966 by Chapter 1 which are attributable to the gross income derived by M from the exercise of his ministry in each of such years, respectively, do not equal or exceed such gross income in such year. If M wishes to have the Federal old-age, survivors, and disability insurance system established by Title II of the Social Security Act extended to his service as a minister, he must file a waiver certificate on or before the due date of his income tax return (including any extension thereof) for 1966.

Example (4). M, a licensed minister who makes his income tax returns on the basis of a calendar year, derived net earnings of $400 or more from the exercise of his ministry for two or more of the taxable years 1955 to 1965, inclusive. In such case, if M wishes to have the Federal old-age, survivors, and disability insurance system established by Title II of the Social Security Act extended to his services as a minister, he must file the waiver certificate on or before the due date (April 15, 1966) prescribed for filing his income tax return for 1965, or any extension thereof. A waiver certificate filed after such date will be invalid.

(b) *Effect of death.* Except as provided in §§1.1402(e)(5)–1, 1.1402(e) (5)–2, and 1.1402(e)(6)–1, the right of an individual to file a waiver certificate shall cease from his death. Thus, except as provided in such sections, the surviving spouse, administrator, or executor of a decedent shall not be permitted to file a waiver certificate for such decedent.

(c) *Computation of net earnings without regard to election.* For the purpose of this section net earnings from self-employment shall be determined without regard to the fact that, without an election under section 1402(e), the performance of services by a duly ordained, commissioned, or licensed minister of a church in the exercise of his ministry, or by a member of a religious order in the exercise of duties required by such order, or the performance of service by an individual in the exercise of his profession as a Christian Science practitioner, does not constitute a

trade or business for purposes of the tax on self-employment income.

[T.D. 6691, 28 FR 12796, Dec. 3, 1963, as amended by T.D. 6978, 33 FR 15938, Oct. 30, 1968]

§ 1.1402(e)(3)–1 Effective date of waiver certificate.

(a) *Filed before August 31, 1957*—(1) *In general.* A certificate on Form 2031 filed by an individual before August 31, 1957, in accordance with the provisions of section 1402(e) in effect at the time the certificate is filed, shall be effective for the first taxable year with respect to which it is filed, and all subsequent taxable years. In order for a certificate filed by an individual before August 31, 1957, to be effective under section 1402(e), the certificate must be made effective for either the first or second taxable year ending after 1954 in which the individual has net earnings from self-employment of $400 or more (determined as provided in paragraph (c) of § 1.1402(e)(2)–1) some part of which is derived from service of the character with respect to which an election may be made. However, a certificate on Form 2031, filed before August 31, 1957, even though filed within the time specified in paragraph (a)(1)(ii) of § 1.1402(e)(2)–1, may not be effective, except as provided in subparagraph (2) of this paragraph, for any taxable year with respect to which the due date for filing the individual's income tax return (including any extension thereof) has expired at the time such certificate is filed. Further, a certificate on Form 2031 may not be effective for any taxable year ending before 1955. In order for a certificate filed before August 31, 1957, except for the filing of a supplemental certificate, to be effective for the first or second taxable year ending after 1954 in which the individual has net earnings from self-employment (determined as provided in paragraph (c) of § 1.1402(e)(2)–1) some part of which is derived from service of the character with respect to which an election may be made, the certificate on Form 2031 must be filed on or before the due date for filing the income tax return of the individual for such first or second taxable year, respectively, or any extension thereof.

(2) *Supplemental certificates*—(i) *Filed before due date of 1958 return.* If under subparagraph (1) of this paragraph the certificate is effective only for the individual's third or fourth taxable year ending after 1954 and all succeeding taxable years, the individual may make such a certificate effective for his first taxable year ending after 1955 and all succeeding taxable years by filing a supplemental certificate on Form 2031. To be valid the supplemental certificate must be filed after August 30, 1957, and on or before the due date of the return (including any extension thereof) for his second taxable year ending after 1956 and must be otherwise in accordance with § 1.1402(e)(1)–1.

Example. M, who files his income tax returns on a calendar year basis, was ordained as a minister in 1956, and his net earnings from service performed in the exercise of his ministry during such year were $400 or more. M had no net earnings from the exercise of his ministry during 1957. On July 15, 1957, M filed a waiver certificate and indicated thereon that it was to become effective for the taxable year 1958. At the time of filing, the certificate was effective for 1958 and all succeeding taxable years. Since the certificate was not filed on or before April 15, 1957 (the due date of M's income tax return for the taxable year 1956), and since there was no extension of time for filing his 1956 income tax return, the certificate was not, at the time of filing, effective for the taxable year 1956. M files a supplemental certificate on April 15, 1958. By the filing of the supplemental certificate, the certificate filed by M on July 15, 1957, was made effective for the year 1956 and all succeeding taxable years.

(ii) *Filed after September 13, 1960, and on or before April 16, 1962.* If under subparagraph (1) of this paragraph the certificate is effective only for the individual's first taxable year ending after 1956 and all succeeding taxable years, the individual may make such certificate effective for his first taxable year ending after 1955 and all succeeding taxable years by:

(a) Filing a supplemental certificate on Form 2031 after September 13, 1960, and before April 17, 1962;

(b) Paying on or before April 16, 1962, the tax under section 1401 in respect of all the individual's self-employment income (except for underpayments of tax attributable to errors made in good faith) for his first taxable year ending after 1955; and

(c) By repaying on or before April 16, 1962, the amount of any refund (including any interest paid under section 6611) that has been made of any such tax which (but for section 1402(e)(3)(B)) is an overpayment.

Any payment or repayment described in section 1402(e)(3)(B) and in this subparagraph shall not constitute an overpayment within the meaning of section 6401 which relates to amounts treated as overpayments. See section 6401 and the regulations thereunder in part 301 of this chapter (Regulations on Procedure and Administration).

Example. M, who files his income tax returns on a calendar year basis, was ordained as a minister in 1956, and his net earnings from service performed in the exercise of his ministry during each of the years 1956 and 1957 were $400 or more. On July 15, 1957, M filed a waiver certificate which became effective, at the time of filing, for 1957 and all succeeding taxable years. Since the certificate was not filed on or before April 15, 1957 (the due date of M's income tax return for the taxable year 1956), and since there was no extension of time for filing his 1956 income tax return, the certificate was not, at the time of filing, effective for the taxable year 1956. M files a supplemental certificate on April 17, 1961. If, in addition to the filing of the supplemental certificate, M pays on or before April 16, 1962, the self-employment tax in respect of all his self-employment income (except for underpayments of tax attributable to errors made in good faith) for his taxable year 1956, and repays, on or before April 16, 1962, the amount of any refund (including any interest paid under section 6611) that has been made of any such tax which (but for section 1402(e)(3)(B)) is an overpayment, the certificate filed by M on July 15, 1957, becomes effective for the year 1956 and all succeeding taxable years.

(b) *Filed after August 30, 1957, and before the due date of the 1958 return.* A certificate on Form 2031 filed by an individual after August 30, 1957, but on or before the due date of the return (including any extension thereof) for his second taxable year ending after 1956, in accordance with the provisions of section 1402(e) in effect at the time the certificate is filed, shall be effective for his first taxable year ending after 1955, and all subsequent taxable years.

(c) *Filed after due date of 1958 return*—(1) *In general.* Except as otherwise provided in §1.1402(e)(5)–1 (applicable to certificates filed within the period September 14, 1960, to April 16, 1962, inclusive) and in subparagraphs (2) and (3) of this paragraph, a certificate on Form 2031 filed by an individual in accordance with the provisions of §§1.1402(e)(1)–1 and 1.1402(e)(2)–1, inclusive, after the due date of the return (including any extension thereof) for his second taxable year ending after 1956 shall be effective for the taxable year immediately preceding the earliest taxable year for which, at the time the certificate is filed, the period for filing a return (including any extension thereof) has not expired, and for all succeeding taxable years.

Example. M, a duly ordained minister of a church, makes his income tax returns on the basis of a calendar year. M has not been granted an extension of time for filing any return. On April 15, 1963, the due date of his income tax return for 1962, M files a waiver certificate pursuant to §1.1402(e)(1)–1 and within the time limitation set forth in §1.1402(e)(2)–1. On April 15, 1963, the year 1962 is the earliest taxable year for which the period for filing a return has not expired. Consequently, M's certificate is effective for 1961 and all succeeding taxable years. M must report and pay any self-employment tax due for 1961 and 1962. (The tax, if any, for 1962 is due on April 15, 1963.) Inasmuch as the due date of the tax for 1961 is April 16, 1962, M must pay interest on any tax due for 1961. For provisions relating to such interest, see §301.6601–1 of Part 301 of this chapter (Regulations on Procedure and Administration).

(2) *Filed after October 13, 1964, and on or before the due date of return for second taxable year ending after 1962.* A certificate on Form 2031 filed by an individual in accordance with the provisions of §§1.1402(e)(1)–1 and 1.1402(e)(2)–1, inclusive, after October 13, 1964, and on or before the due date of the return (including any extension thereof) for his second taxable year ending after 1962 (April 15, 1965, in the case of a calendar year taxpayer who has not been granted an extension of time for filing his income tax return for 1964) shall be effective for his first taxable year ending after 1961 and all succeeding taxable years.

Example. M, a duly ordained minister of a church, makes his income tax returns on the basis of a calendar year. M has not been granted an extension of time for filing any return. On April 15, 1965, the due date of his income tax return for 1964, M files a waiver certificate pursuant to §1.1402(e)(1)–1 and

within the time limitation set forth in §1.1402(e)(2)–1. M's certificate is effective for 1962 and all succeeding taxable years, and he must report and pay any self-employment tax due for 1962, 1963, and 1964. (The tax, if any, for 1964 is due on April 15, 1965.) Inasmuch as the due dates of the tax for 1962 and 1963 are April 15, 1963, and April 15, 1964, respectively, M must pay interest on any tax due for 1962 or 1963. For provisions relating to such interest, see §301.6601–1 of Part 301 of this chapter (Regulations on Procedure and Administration).

(3) *Filed after July 30, 1965, and on or before the due date of return for second taxable year ending after 1963.* A certificate on Form 2031 filed by an individual in accordance with the provisions of §§1.1402(e)(1)–1 and 1.1402(e)(2)–1, inclusive, after July 30, 1965, and on or before the due date of the return (including any extension thereof) for his second taxable year ending after 1963 (Apr. 15, 1966, in the case of a calendar year taxpayer who has not been granted an extension of time for filing his income tax return for 1965) shall be effective for his first taxable year ending after 1962 and all succeeding taxable years.

Example. M, a duly ordained minister of a church, makes his income tax returns on the basis of a calendar year. M has not been granted an extension of time for filing any return. On April 15, 1966, the due date of his income tax return for 1965, M files a waiver certificate pursuant to §1.1402(e)(1)–1 and within the time limitation set forth in §1.1402(e)(2)–1. M's certificate is effective for 1963 and all succeeding taxable years, and he must report and pay any self-employment tax due for 1963, 1964, and 1965. (The tax, if any, for 1965 is due on April 15, 1966.) Inasmuch as the due dates of the tax for 1963 and 1964 are April 15, 1964, and April 15, 1965, respectively, M must pay interest on any tax due for 1963 or 1964. For provisions relating to such interest, see §301.6601–1 of Part 301 of this chapter (Regulations on Procedure and Administration).

(d) *Election irrevocable.* An election which has become effective pursuant to this section is irrevocable. A certificate may not be withdrawn after June 30, 1961.

[T.D. 6691, 28 FR 12796, Dec. 3, 1963, as amended by T.D. 6978, 33 FR 15939, Oct. 30, 1968]

§1.1402(e)(4)–1 Treatment of certain remuneration paid in 1955 and 1956 as wages.

If in 1955 or 1956 an individual was paid remuneration for service described in section 3121(b)(8)(A) which was erroneously treated by the organization employing him (under a certificate filed by such organization pursuant to section 3121(k) or the corresponding section of prior law) as employment, within the meaning of the Federal Insurance Contributions Act (Chapter 21 of the Internal Revenue Code), and if on or before August 30, 1957, the taxes imposed by sections 3101 and 3111 were paid (in good faith and upon the assumption that the insurance system established by title II of the Social Security Act had been extended to such service) with respect to any part of the remuneration paid to such individual for such service, then the remuneration with respect to which such taxes were paid, and with respect to which no credit or refund of such taxes (other than a credit or refund which would be allowable if such service had constituted employment) has been obtained either by the employer or the employee on or before August 30, 1957, shall be deemed, for purposes of the Self-Employment Contributions Act of 1954 and the Federal Insurance Contributions Act, to constitute remuneration paid for employment and not net earnings from self-employment. For regulations relating to section 3121(b)(8)(A) and (k), see §§31.3121(b)(8)–1 and 31.3121(k)–1 of subpart B of part 31 of this chapter (Employment Tax Regulations).

§1.1402(e)(5)–1 Optional provision for certain certificates filed before April 15, 1962.

(a) *Certificates.* (1) The optional provision contained in section 1402(e)(5)(A) may be applied to a certificate on Form 2031 filed within the period September 14, 1960, to April 16, 1962, inclusive, in the case of a duly ordained, commissioned, or licensed minister of a church, a member of a religious order (other than a member of a religious order who has taken a vow of poverty

as a member of such order), or a Christian Science practitioner, who has derived net earnings, in any taxable year ending after 1954 and before 1960, from the performance of service in the exercise of his ministry, in the exercise of duties required by his religious order, or in the exercise of his profession as a Christian Science practitioner, respectively, and who has reported such earnings as self-employment income on a return filed before September 14, 1960, and on or before the date prescribed for filing such return (including any extension thereof). The certificate may be filed by such minister, member of a religious order, or Christian Science practitioner or by a fiduciary acting for such individual or his estate, or by his survivor within the meaning of section 205(c)(1)(C) of the Social Security Act, and it must be filed after September 13, 1960, and on or before April 16, 1962. Subject to the conditions stated in subparagraph (2) of this paragraph, such certificate may be effective at the election of the person filing it, for the first taxable year ending after 1954 and before 1960 for which a return, as described in the first sentence of this subparagraph, was filed, and for all succeeding taxable years, rather than for the period prescribed in § 1.1402(e)(3)–1. The election for retroactive application of the certificate may be made by indicating on the certificate the first taxable year for which it is to be effective and that such year is the first taxable year ending after 1954 and before 1960 for which the minister, member of a religious order, or Christian Science practitioner filed an income tax return on which he reported net earnings for such year from the exercise of his ministry, the exercise of duties required by his religious order, or the exercise of his profession as a Christian Science practitioner, as the case may be, and by fulfilling the conditions prescribed in subparagraph (2) of this paragraph.

(2) A certificate to which subparagraph (1) of this paragraph relates may be effective for a taxable year prior to the taxable year immediately preceding the earliest taxable year for which, at the time the certificate is filed, the period for filing a return (including any extension thereof) has not expired, only if the following conditions are met:

(i) The tax under section 1401 is paid on or before April 16, 1962, in respect of all self-employment income (whether or not derived from the performance of service by the individual in the exercise of his ministry, in the exercise of duties required by his religious order, or in the exercise of his profession as a Christian Science practitioner, as the case may be) for the first taxable year ending after 1954 and before 1960 for which such individual has filed a return, as described in subparagraph (1) of this paragraph, and for each succeeding taxable year ending before 1960; and

(ii) In any case where refund has been made of any such tax which (but for section 1402(e)(5)) is an overpayment, the amount refunded (including any interest paid under section 6611) is repaid on or before April 16, 1962. For regulations under section 6611 (relating to interest on overpayments), see § 301.6611–1 of part 301 of this chapter (Regulations on Procedure and Administration).

(b) *Supplemental certificates.* (1) Subject to the conditions stated in subparagraph (2) of this paragraph, a certificate on Form 2031 filed on or before September 13, 1960, by a minister, member of a religious order, or a Christian Science practitioner described in paragraph (a)(1) of this section and which (but for section 1402(e)(5)(B)) is ineffective for the first taxable year ending after 1954 and before 1959 for which such a return as described in paragraph (a)(1) of this section was filed by such individual, shall be effective for such first taxable year and for all succeeding taxable years, provided a supplemental certificate is filed by such individual or by a fiduciary acting for him or his estate, or by his survivor (within the meaning of section 205(c)(1)(C) of the Social Security Act), after September 13, 1960 and on or before April 16, 1962.

(2) The filing of a supplemental certificate pursuant to subparagraph (1) of this paragraph will give retroactive effect to a certificate to which such subparagraph applies only if the following conditions are met:

(i) The tax under section 1401 is paid on or before April 16, 1962, in respect of all self-employment income (whether or not attributable to earnings as a minister, member of a religious order, or Christian Science practitioner) for the first taxable year for which the certificate is retroactively effective and for each subsequent year ending before 1959; and

(ii) In any case where refund has been made of any such tax which (but for section 1402(d)(5)) is an overpayment, the amount refunded (including any interest paid under section 6611) is repaid on or before April 16, 1962.

(c) *Underpayment of tax.* For purposes of this section, any underpayment of the tax which is attributable to an error made in good faith will not invalidate an election which is otherwise valid.

(d) *Nonapplicability of section 6401.* Any payment or repayment described in paragraph (a)(2) or paragraph (b)(2) of this section shall not constitute an overpayment within the meaning of section 6401 which relates to amounts treated as overpayments. For the provisions of section 6401 and the regulations thereunder, see section 6401 and § 301.6401–1 of part 301 of this chapter (Regulations on Procedure and Administration).

§ 1.1402(e)(5)–2 Optional provisions for certain certificates filed on or before April 17, 1967.

(a) *In general*—(1) *General rule.* Section 1402(e)(5), as amended by the Social Security Amendments of 1965, applies only in the case of a duly ordained, commissioned, or licensed minister of a church, a member of a religious order (other than a member of a religious order who has taken a vow of poverty as a member of such order), or a Christian Science practitioner, who has derived net earnings in any taxable year ending after 1954 from the performance of service in the exercise of his ministry, in the exercise of duties required by his religious order, or in the exercise of his profession as a Christian Science practitioner, respectively, and who has reported such earnings as self-employment income on a return filed on or before the date prescribed for filing such return (including any extension thereof).

(2) *Supplemental certificate.* Subject to the conditions stated in subparagraph (4) of this paragraph, a certificate on Form 2031 filed on or before April 15, 1966, by a minister, member of a religious order, or a Christian Science practitioner described in subparagraph (1) of this paragraph and which (but for section 1402(e)(5)(A)) is ineffective for the first taxable year ending after 1954 for which a return described in subparagraph (1) of this paragraph was filed by such individual, shall be effective for such first taxable year and for all succeeding taxable years, provided a supplemental certificate is filed by such individual or by a fiduciary acting for him or his estate, or by his survivor (within the meaning of section 205(c)(1)(C) of the Social Security Act), after July 30, 1965 (the date of enactment of the Social Security Amendments of 1965), and on or before April 17, 1967.

(3) *Certificate filed by survivor.* A survivor (within the meaning of section 205(c)(1)(C) of the Social Security Act) of an individual who:

(i) Died on or before April 15, 1966,

(ii) Was a minister, member of a religious order, or a Christian Science practitioner described in subparagraph (1) of this paragraph,

(iii) Has filed a return as described in subparagraph (1) of this paragraph for a taxable year ending after 1954, and

(iv) Had not filed a valid waiver certificate on Form 2031,

may file a certificate on Form 2031 on behalf of such individual. The certificate must be filed after July 30, 1965 (the date of enactment of the Social Security Amendments of 1965), and on or before April 17, 1967. Subject to the conditions stated in subparagraph (4) of this paragraph, such certificate shall be effective for the first taxable year ending after 1954 for which a return, as described in subparagraph (1) of this paragraph, was filed by such individual and for all succeeding taxable years.

(4) *Applicable conditions.* A supplemental certificate referred to in subparagraph (2) of this paragraph and a certificate referred to in subparagraph (3) of this paragraph shall be effective

only if the following conditions are met:

(i) The tax under section 1401 is paid on or before April 17, 1967, in respect of all self-employment income (whether or not attributable to earnings as a minister, member of a religious order, or Christian Science practitioner) for the first taxable year ending after 1954 for which the individual (by or in respect of whom the supplemental certificate or certificate is filed) has filed a return, as described in paragraph (1) of this paragraph, and for each succeeding taxable year ending before January 1, 1966; and

(ii) In any case where refund has been made of any such tax which (but for section 1402(e)(5)) is an overpayment, the amount refunded (including any interest paid under section 6611) is repaid on or before April 17, 1967. For regulations under section 6611 (relating to interest on overpayments), see § 301.6611–1 of part 301 of this chapter (Regulations on Procedure and Administration).

(b) *Underpayment of tax.* For purposes of this section, any underpayment of the tax which is attributable to an error made in good faith will not invalidate an election which is otherwise valid.

(c) *Nonapplicability of section 6401.* Any payment or repayment described in paragraph (a)(4) of this section shall not constitute an overpayment within the meaning of section 6401 which relates to amounts treated as overpayments. For the provisions of section 6401 and the regulations thereunder, see section 6401 and § 301.6401–1 of part 301 of this chapter (Regulations on Procedure and Administration).

(d) *Applicability of §§ 1.1402(e) (5)–1 and 1.1402(e)(6)–1.* The provisions of section 1402(e) (5) and (6) (in effect prior to July 30, 1965, the date of enactment of the Social Security Amendments of 1965) and §§ 1.1402(e) (5)–1 and 1.1402(e)(6)–1 shall apply with respect to any certificate filed pursuant to such sections if a supplemental certificate is not filed with respect to such certificate as provided in this section.

[T.D. 6978, 33 FR 15939, Oct. 30, 1968]

§ 1.1402(e)(6)–1 Certificates filed by fiduciaries or survivors on or before April 15, 1962.

In any case in which an individual whose death has occurred after September 12, 1960, and before April 16, 1962, derived earnings from the performance of services as a duly ordained, commissioned, or licensed minister of a church in the exercise of his ministry, as a member of a religious order (other than a member of a religious order who has taken a vow of poverty as a member of such order) in the exercise of duties required by such order, or in the exercise of his profession as a Christian Science practitioner, a waiver certificate on Form 2031 may be filed after June 30, 1961 (the date of enactment of the Social Security Amendments of 1961), and on or before April 16, 1962, by a fiduciary acting for such individual's estate or by such individual's survivor within the meaning of section 205(c)(1)(C) of the Social Security Act. Such certificates shall be effective for the period prescribed in section 1402(e)(3)(A) (see § 1.1402(e)(3)–1(c)) as if filed by the individual on the date of his death.

§ 1.1402(f)–1 Computation of partner's net earnings from self-employment for taxable year which ends as result of his death.

(a) *Taxable years ending after August 28, 1958*—(1) *In general.* The rules for the computation of a partner's net earnings from self-employment are set forth in paragraphs (d) to (g), inclusive, of § 1.1402(a)–2. In addition to the net earnings from self-employment computed under such rules for the last taxable year of a deceased partner, if a partner's taxable year ends after August 28, 1958, solely because of death, and on a day other than the last day of the partnership's taxable year, the deceased partner's net earnings from self-employment for such year shall also include so much of the deceased partner's distributive share of partnership ordinary income or loss (see subparagraph (3) of this paragraph) for the taxable year of the partnership in which his death occurs as is attributable to an interest in the partnership prior to the month following the month of his death.

(2) *Computation*. (i) The deceased partner's distributive share of partnership ordinary income or loss for the partnership taxable year in which he died shall be determined by applying the rules contained in paragraphs (d) to (g), inclusive, of §1.1402(a)–2, except that paragraph (e) shall not apply.

(ii) The portion of such distributive share to be included under this section in the deceased partner's net earnings from self-employment for his last taxable year shall be determined by treating the ordinary income or loss constituting such distributive share as having been realized or sustained ratably over the period of the partnership taxable year during which the deceased partner had an interest in the partnership and during which his estate, or any other person succeeding by reason of his death to rights with respect to his partnership interest, held such interest in the partnership or held a right with respect to such interest. The amount to be included under this section in the deceased partner's net earnings from self-employment for his last taxable year will, therefore, be determined by multiplying the deceased partner's distributive share of partnership ordinary income or loss for the partnership taxable year in which he died, as determined under subdivision (i) of this subparagraph, by a fraction, the denominator of which is the number of calendar months in the partnership taxable year over which the ordinary income or loss constituting the deceased partner's distributive share of partnership income or loss for such year is treated as having been realized or sustained under the preceding sentence and the numerator of which is the number of calendar months in such partnership taxable year that precede the month following the month of his death.

(3) *Definition of ''deceased partner's distributive share''*. For the purpose of this section, the term ''deceased partner's distributive share'' includes the distributive share of his estate or of any other person succeeding, by reason of his death, to rights with respect to his partnership interest. It does not include any share attributable to a partnership interest which was not held by the deceased partner at the time of his death. Thus, if a deceased partner's estate should acquire an interest in a partnership additional to the interest to which it succeeded upon the death of the deceased partner, the amount of the distributive share attributable to such additional interest acquired by the estate would not be included in computing the ''deceased partner's distributive share'' of the partnership's ordinary income or loss for the partnership taxable year.

(4) *Examples*. The application of this paragraph may be illustrated by the following examples:

Example (1). B, an individual who files his income tax returns on the calendar year basis, is a member of the ABC partnership, the taxable year of which ends on June 30. B dies on October 17, 1958, and his estate succeeds to his partnership interest and continues as a partner in its own right under local law until June 30, 1959. B's distributive share of the partnership's ordinary income, as determined under paragraphs (d) to (g), inclusive, of §1.1402(a)–2, for the taxable year of the partnership ended June 30, 1958 is $2,400. His distributive share, including the share of his estate, of such partnership's ordinary income, as determined under paragraphs (d) to (g), inclusive, of §1.1402(a)–2 (with the exception of paragraph (e)), for the taxable year of the partnership ended June 30, 1959 is $4,500. The portion of such $4,500 attributable to an interest in the partnership prior to the month following the month in which he died is $4,500×4/12 (4 being the number of months in the partnership taxable year in which B died which precede the month following the month of his death and 12 being the number of months in such partnership taxable year in which B and his estate had an interest in the partnership) or $1,500. The amount to be included in the deceased partner's net earnings from self-employment for his last taxable year is $3,900 ($2,400 plus $1,500).

Example (2). If in the preceding example B's estate is entitled to only $1,000, the amount of B's distributive share of partnership ordinary income for the period July 1, 1958 through October 17, 1958, such $1,000 is considered to have been realized ratably over the period preceding B's death and will be included in B's net earnings from self-employment for his last taxable year.

Example (3). X, who reports his income on a calendar year basis, is a member of a partnership which also reports its income on a calendar year basis. X dies on June 30, 1959, and his estate succeeds to his partnership interest and continues as a partner in its own right under local law. On September 15, 1959, X's estate sells the partnership interest to

which it succeeded on the death of X. X's distributive share of partnership income for 1959 is $5,500. $600 of such amount is X's share of the gain from the sale of a capital asset which occurs on May 1, 1959, and $400 of such amount is the estate's share of the gain from the sale of a capital asset which occurs on July 15, 1959. The remainder of such amount is income from services rendered. X's distributive share of partnership ordinary income for 1959, as determined under paragraphs (d) to (g), inclusive, of §1.1402(a)–2 (with the exception of paragraph (e)), is $4,500 ($5,500 minus $1,000). The portion of such share attributable to an interest in the partnership prior to the month following the month of his death is $4,500×6/8.5 (6 being the number of months in the partnership taxable year in which X died as precede the month following the month of his death and 8.5 being the number of months in such partnership taxable year in which X and his estate had an interest in the partnership) or $3,176.47.

(b) *Options available to farmers*—(1) *Special rule.* In determining whether the optional method available to a member of a farm partnership in computing his net earnings from self-employment may be applied, and in applying such method, it is necessary to determine the partner's distributive share of partnership gross income and the partner's distributive share of income described in section 702(a)(9). See section 1402(a) and §1.1402(a)–15. If section 1402(f) and this section apply, or may be made applicable under section 403(b)(2) of the Social Security Amendments of 1958 and paragraph (c) of this section, for the last taxable year of a deceased partner, such partner's distributive share of income described in section 702(a)(9) for his last taxable year shall be determined by including therein any amount which is included under section 1402(f) and this section in his net earnings from self-employment for such taxable year. Such a partner's distributive share of partnership gross income for his last taxable year shall be determined by including therein so much of the deceased partner's distributive share (see paragraph (a)(3) of this section) of partnership gross income, as defined in section 1402(a) and paragraph (b) of §1.1402(a)–15, for the partnership taxable year in which he died as is attributable to an interest in the partnership prior to the month following the month of his death. Such allocation shall be made in the same manner as is prescribed in paragraph (a)(2) of this section for determining the portion of a deceased partner's distributive share of partnership ordinary income or loss to be included under section 1402(f) and this section in his net earnings from self-employment for his last taxable year.

(2) *Examples.* The principles set forth in this paragraph may be illustrated by the following examples:

Example (1). X, an individual who files his income tax returns on a calendar year basis, is a member of the XYZ farm partnership, the taxable year of which ends on March 31. X dies on May 31, 1967, and his estate succeeds to his partnership interest and continues as a partner in its own right under local law until March 31, 1968. X's distributive share of the partnership's ordinary income, determined under paragraphs (d) to (g), inclusive, of §1.1402(a)–2, for the taxable year of the partnership ended March 31, 1967, is $1,600. His distributive share, including the share of his estate, of such partnership's ordinary loss as determined under paragraphs (d) to (g), inclusive, of §1.1402(a)–2 (with the exception of paragraph (e)), for the taxable year of the partnership ended March 31, 1968, is $1,200. The portion of such $1,200 attributable to an interest in the partnership prior to the month following the month in which he died is $1,200×2/12 (2 being the number of months in the partnership taxable year in which X died which precede the month following the month of his death and 12 being the number of months in such partnership taxable year in which X and his estate had an interest in the partnership) or $200. X is also a member of the ABX farm partnership, the taxable year of which ends on May 31. His distributive share of the partnership loss described in section 702(a)(9) for the partnership taxable year ending May 31, 1967, is $300. Section 1402(f) and this section do not apply with respect to such $300 since X's last taxable year ends, as a result of his death, with the taxable year of the ABX partnership. Under this paragraph the $200 loss must be included in determining X's distributive share of XYZ partnership income described in section 702(a)(9) for the purpose of applying the optional method available to farmers for computing net earnings from self-employment. Further, the resulting $1,400 of income must be aggregated, pursuant to paragraph (c) of §1.1402(a)–15, with the $300 loss, X's distributive share of ABX partnership loss described in section 702(a)(9), for purposes of applying such option. The representative of X's estate may exercise the option described in paragraph (a)(2)(ii) of §1.1402(a)–15, provided the portion of X's distributive share of XYZ partnership gross income for

the taxable year ended March 31, 1968, attributable to an interest in the partnership prior to the month following the month in which he died (the allocation being made in the manner prescribed for allocating his $1,200 distributive share of XYZ partnership loss for such year), when aggregated with his distributive share of XYZ partnership gross income for the partnership taxable year ended March 31, 1967, and with his distributive share of ABX partnership gross income for the partnership taxable year ended May 31, 1967, results in X having more than $2,400 of gross income from the trade or business of farming. If such aggregate amount of gross income is not more than $2,400, the option described in paragraph (a)(2)(i) of § 1.1402(a)–15, is available.

Example (2). A, a sole proprietor engaged in the business of farming, files his income tax returns on a calendar year basis. A is also a member of a partnership engaged in an agricultural activity. The partnership files its returns on the basis of a fiscal year ending March 31. A dies June 29, 1967. A's gross income from farming as a sole proprietor for the 6-month period comprising his taxable year which ends because of death is $1,600 and his actual net earnings from self-employment based thereon are $400. As of March 31, 1967, A's distributive share of the gross income of the farm partnership is $2,200 and his distributive share of income described in section 702(a)(9) based thereon is $1,000. The amount of A's distributive share of the partnership's ordinary income for its taxable year ended March 31, 1968, which may be included in his net earnings from self-employment under section 1402(f) and paragraph (a) of this section is $300. The amount of the deceased partner's distributive share of partnership gross income attributable to an interest in the partnership prior to the month following the month of his death as is determined, pursuant to subparagraph (1) of this paragraph, under paragraph (a) of this section is $2,000. An aggregation of the above figures produces a gross income from farming of $5,800 and actual net earnings from self-employment of $1,700. Under these circumstances none of the options provided by section 1402(a) may be used. If the actual net earnings from self-employment had been less than $1,600, the option described in paragraph (a)(2)(ii) of § 1.1402(a)–15 would have been available.

(c) *Taxable years ending after 1955 and on or before August 28, 1958*—(1) *Requirement of election.* If a partner's taxable year ended, as a result of his death, after 1955 and on or before August 28, 1958, the rules set forth in paragraph (a) of this section may be made applicable in computing the deceased partner's net earnings from self-employment for his last taxable year provided that:

(i) Before January 1, 1960, there is filed, by the person designated in section 6012(b)(1) and paragraph (b)(1) of § 1.6012–3, a return (or amended return) of the tax imposed by chapter 2 for the taxable year ending as a result of death, and

(ii) Such return, if filed solely for the purpose of reporting net earnings from self-employment resulting from the enactment of section 1402(f), is accompanied by the amount of tax attributable to such net earnings.

(2) *Administrative rule of special application.* Notwithstanding the provisions of sections 6601, 6651, and 6653 (see such sections and the regulations thereunder) no interest or penalty shall be assessed or collected on the amount of any self-employment tax due solely by reason of the operation of section 1402(f) in the case of an individual who died after 1955 and before August 29, 1958.

[T.D. 6691, 28 FR 12796, Dec. 3, 1963, as amended by T.D. 6993, 34 FR 830, Jan. 18, 1969]

§ 1.1402(g)–1 Treatment of certain remuneration erroneously reported as net earnings from self-employment.

(a) *General rule.* If an amount is erroneously paid as self-employment tax, for any taxable year ending after 1954 and before 1962, with respect to remuneration for service (other than service described in section 3121(b)(8)(A)) performed in the employ of an organization described in section 501(c)(3) and exempt from income tax under section 501(a), and if such remuneration is reported as self-employment income on a return filed on or before the due date prescribed for filing such return (including any extension thereof), the individual who paid such amount (or a fiduciary acting for such individual or his estate, or his survivor (within the meaning of section 205(c)(1)(C) of the Social Security Act)), may request that such remuneration be deemed to constitute net earnings from self-employment. If such request is filed during the period September 14, 1960, to April 16, 1962, inclusive, and on or after the date on which the organization which paid such remuneration to such

individual for services performed in its employ has filed, pursuant to section 3121(k), a certificate waiving exemption from taxes under the Federal Insurance Contributions Act, and if no credit or refund of any portion of the amount erroneously paid for such taxable year as self-employment tax (other than a credit or refund which would be allowable if such tax were applicable with respect to such remuneration) has been obtained before the date on which such request is filed or, if obtained, the amount credited or refunded (including any interest under section 6611) is repaid on or before such date, then, for purposes of the Self-Employment Contributions Act of 1954 and the Federal Insurance Contributions Act, any amount of such remuneration which is paid to such individual before the calendar quarter in which such request is filed (or before the succeeding quarter if such certificate first becomes effective with respect to services performed by such individual in such succeeding quarter) and with respect to which no tax (other than an amount erroneously paid as tax) has been paid under the Federal Insurance Contributions Act, shall be deemed to constitute net earnings from self-employment and not remuneration for employment. If the certificate filed by such organization pursuant to section 3121(k) is not effective with respect to services performed by such individual on or before the first day of the calendar quarter in which the request is filed, then, for purposes of section 3121(b)(8)(B) (ii) and (iii), such individual shall be deemed to have become an employee of such organization (or to have become a member of a group, described in section 3121(k)(1)(E), of employees of such organization) on the first day of the succeeding quarter.

(b) *Request for validation.* (1) No particular form is prescribed for making a request under paragraph (a) of this section. The request should be in writing, should be signed and dated by the person making the request, and should indicate clearly that it is a request that, pursuant to section 1402(g) of the Code, remuneration for service described in section 3121(b)(8) (other than service described in section 3121(b)(8)(A)) erroneously reported as self-employment income for one or more specified years be deemed to constitute net earnings from self-employment and not remuneration for employment. In addition, the following information shall be shown in connection with the request:

(i) The name, address, and social security account number of the individual with respect to whose remuneration the request is made.

(ii) The taxable year or years (ending after 1954 and before 1962) to which the request relates.

(iii) A statement that the remuneration was erroneously reported as self-employment income on the individual's return for each year specified and that the return was filed on or before its due date (including any extension thereof).

(iv) Location of the office of the district director with whom each return was filed.

(v) A statement that no portion of the amount erroneously paid by the individual as self-employment tax with respect to the remuneration has been credited or refunded (other than a credit or refund which would have been allowable if the tax had been applicable with respect to the remuneration); or, if a credit or refund of any portion of such amount has been obtained, a statement identifying the credit or refund and showing how and when the amount credited or refunded, together with any interest received in connection therewith, was repaid.

(vi) The name and address of the organization which paid the remuneration to the individual.

(vii) The date on which the organization filed a waiver certificate on Form SS–15, and the location of the office of the district director with whom it was filed.

(viii) The date on which the certificate became effective with respect to services performed by the individual.

(ix) If the request is made by a person other than the individual to whom the remuneration was paid, the name and address of that person and evidence which shows the authority of such person to make the request.

(2) The request should be filed with the district director of internal revenue with whom the latest of the returns specified in the request pursuant

to subparagraph (1)(iii) of this paragraph was filed.

(c) *Cross references*. For regulations relating to section 3121 (b)(8) and (k), see §§31.3121(b)(8)–2 and 31.3121(k)–1 of subpart B of part 31 of this chapter (Employment Tax Regulations). For regulations relating to exemption from income tax of an organization described in section 501(c)(3), see §1.501(c)(3)–1.

§1.1402(h)–1 Members of certain religious groups opposed to insurance.

(a) *In general*. An individual—(1) Who is a member of a recognized religious sect or division thereof and,

(2) Who is an adherent of established tenets or teachings of such sect or division and by reason thereof is conscientiously opposed to acceptance of the benefits of any private or public insurance which makes payments in the event of death, disability, old age, or retirement or makes payments toward the cost of, or provides services for, medical care (including the benefits of any insurance system established by the Social Security Act),

may file an application for exemption from the tax under section 1401. The form of insurance to which section 1402(h) and this section refer does not include liability insurance of a kind that provides only for the protection of other persons, or property of other persons, who may be injured or damaged by or on property belonging to, or by an action of, an individual who otherwise meets the requirements of this section. An application for exemption under section 1402(h) and this section shall be made in the manner provided in paragraph (b) of this section and within the time specified in paragraph (c) of this section. For provisions relating to the filing of an application for exemption by a fiduciary or survivor, see paragraph (d) of this section.

(b) *Application for exemption*. The application for exemption shall be filed on Form 4029 in duplicate with the internal revenue official or office designated on the form. The filing of a return by a member of a religious group opposed to insurance showing no self-employment income or self-employment tax shall not be construed as an application for exemption referred to in paragraph (a) of this section.

(c) *Time limitation for filing application for exemption*—(1) *Taxable years ending before December 31, 1967*. A member of a religious group opposed to insurance within the meaning of paragraph (a) of this section:

(i) Who has self-employment income (determined without regard to subsections (c)(6) and (h) of section 1402 and this section) for one or more taxable years ending before December 31, 1967, and

(ii) Who desires to be exempt from the payment of the self-employment tax under section 1401,

must file the application for exemption on or before December 31, 1968.

(2) *Taxable year ending on or after December 31, 1967*—(i) *General rule*. Except as provided in subdivision (ii) of this subparagraph, a member of a religious group opposed to insurance within the meaning of paragraph (a) of this section:

(a) Who has no self-employment income (determined without regard to subsections (c)(6) and (h) of section 1402 and this section) for any taxable year ending before December 31, 1967, and

(b) Who desires to be exempt from the payment of the self-employment tax under section 1401 for any taxable year ending on or after December 31, 1967,

must file the application for exemption on or before the due date of the income tax return (see section 6072), including any extension thereof (see section 6081), for the first taxable year ending on or after December 31, 1967, for which he has self-employment income (determined without regard to subsections (c)(6) and (h) of section 1402 and this section.

(ii) *Exception to general rule*. If an individual to whom subdivision (i) of this subparagraph applies:

(a) Is notified in writing by a district director of internal revenue or the Director of International Operations that he has not filed the application for exemption on or before the date specified in such subdivision (i), and

(b) Files the application for exemption on or before the last day of the third calendar month following the calendar month in which he is so notified,

such application shall be considered a timely filed application for exemption.

(d) *Application by fiduciary or survivor.* If an individual who was a member of a religious group opposed to insurance dies before the expiration of the time prescribed in section 1402(h)(2) and paragraph (c) of this section during which an application could have been filed by him, an application for exemption with respect to such deceased individual may be filed by a fiduciary acting for such individual's estate or by such individual's survivor within the meaning of section 205(c)(1)(C) of the Social Security Act. An application for exemption with respect to a deceased individual executed by a fiduciary or survivor may be approved only if it could have been approved if the individual were not deceased and had filed the application on the date the application was filed by the fiduciary or executor.

(e) *Approval of application for exemption*—(1) *In general.* The filing of an application for exemption on Form 4029 by a member of a religious group opposed to insurance does not constitute an exemption from the payment of the tax on self-employment income. An individual who files such an application is exempt from the payment of the tax only if the application is approved by the official with whom the application is required to be filed (see paragraph (b) of this section).

(2) *Conditions relating to approval or disapproval of application.* An application for exemption on Form 4029 will not be approved unless the Secretary of Health, Education, and Welfare finds with respect to the religious sect or division thereof of which the individual filing the application is a member:

(i) That the sect or division thereof has the established tenets or teachings by reason of which the individual applicant is conscientiously opposed to the benefits of insurance of the type referred to in section 1402(h) (see paragraph (a) of this section),

(ii) That it is the practice, and has been for a period of time which the Secretary of Health, Education, and Welfare deems to be substantial, for members of such sect or division thereof to make provisions for their dependent members which, in the judgment of such Secretary, is reasonable in view of the general level of living of the members of the sect or division thereof; and

(iii) That the sect or division thereof has been in existence continuously since December 31, 1950.

In addition, an application for exemption on Form 4029 will not be approved if any benefit or other payment under title II of title XVIII of the Social Security Act became payable (or, but for section 203, relating to reduction of insurance benefits, or 222(b), relating to reduction of insurance benefits on account of refusal to accept rehabilitation services, of the Social Security Act would have been payable) at or before the time of the filing of the application for exemption. Any determination required to be made pursuant to the preceding sentence will be made by the Secretary of Health, Education, and Welfare.

(f) *Period for which exemption is effective*—(1) *General rule.* An application for exemption shall be in effect (if approved as provided in paragraph (e) of this section) for all taxable years beginning after December 31, 1950, except as otherwise provided in subparagraph (2) of this paragraph.

(2) *Exceptions.* An application for exemption referred to in subparagraph (1) of this paragraph shall not be effective for any taxable year which:

(i) Begins *(a)* before the taxable year in which the individual filing the application first met the requirements of subparagraphs (1) and (2) of paragraph (a) of this section, or *(b)* before the time as of which the Secretary of Health, Education, and Welfare finds that the sect or division thereof of which the individual is a member met the requirements of subparagraphs (C) and (D) of section 1402(h)(1) (see subdivisions (i) and (ii) of paragraph (e)(2) of this section), or

(ii) Ends *(a)* after the time at which the individual filing the application ceases to meet the requirements of subparagraphs (1) and (2) of paragraph (a) of this section, or *(b)* after the time as of which the Secretary of Health, Education, and Welfare finds that the sect or division thereof of which the individual is a member ceases to meet the requirements of subparagraphs (C) and

(D) of section 1402(h)(1) (see subdivisions (i) and (ii) of paragraph (e)(2) of this section).

(g) *Refund or credit.* An application for exemption on Form 4029 filed on or before December 31, 1968 (if approved as provided in paragraph (e) of this section), shall constitute a claim for refund or credit of any tax on self-employment income under section 1401 (or under section 480 of the Internal Revenue Code of 1939) paid or incurred in respect of any taxable year beginning after December 31, 1950, and ending before December 31, 1967, for which an exemption is granted. Refund or credit of any tax referred to in the preceding sentence may be made, pursuant to the provisions of section 501(c) of the Social Security Amendments of 1967 (81 Stat. 933), notwithstanding that the refund or credit would otherwise be prevented by operation of any law or rule of law. No interest shall be allowed or paid in respect of any refund or credit made or allowed in connection with a claim for refund or credit made on Form 4029.

[T.D. 6993, 34 FR 831, Jan. 18, 1969]

§ 1.1403–1 Cross references.

For provisions relating to the requirement for filing returns with respect to net earnings from self-employment, see § 1.6017–1. For provisions relating to declarations of estimated tax on self-employment income, see §§ 1.6015(a) to 1.6015(j)–1, inclusive. For other administrative provisions relating to the tax on self-employment income, see the applicable sections of the regulations in this part (§ 1.6001–1 *et seq.*) and the applicable sections of the regulations in part 301 of this chapter (Regulations on Procedure and Administration).

[T.D. 7427, 41 FR 34026, Aug. 12, 1976]

Withholding of Tax on Nonresident Aliens and Foreign Corporations and Tax-Free Covenant Bonds

NONRESIDENT ALIENS AND FOREIGN CORPORATIONS

§ 1.1441–0 Outline of regulation provisions for section 1441.

This section lists captions contained in §§ 1.1441–1 through 1.1441–9.

§ 1.1441–1 Requirement for the deduction and withholding of tax on payments to foreign persons.

(a) Purpose and scope.
(b) General rules of withholding.
(1) Requirement to withhold on payments to foreign persons.
(2) Determination of payee and payee's status.
(i) In general.
(ii) Payments to a U.S. agent of a foreign person.
(iii) Payments to wholly-owned entities.
(A) Foreign-owned domestic entity.
(B) Foreign entity.
(iv) Payments to a U.S. branch of certain foreign banks or foreign insurance companies.
(A) U.S. branch treated as a U.S. person in certain cases.
(B) Consequences to the withholding agent.
(C) Consequences to the U.S. branch.
(D) Definition of payment to a U.S. branch.
(E) Payments to other U.S. branches.
(v) Payments to a foreign intermediary.
(A) Payments treated as made to persons for whom the intermediary collects the payment.
(B) Payments treated as made to foreign intermediary.
(vi) Other payees.
(vii) Rules for reliably associating a payment with a withholding certificate or other appropriate documentation.
(A) Generally.
(B) Special rules applicable to a withholding certificate from a nonqualified intermediary or flow-through entity.
(C) Special rules applicable to a withholding certificate provided by a qualified intermediary that does not assume primary withholding responsibility.

(D) Special rules applicable to a withholding certificate provided by a qualified intermediary that assumes primary withholding responsibility under chapter 3 of the Internal Revenue Code.
(E) Special rules applicable to a withholding certificate provided by a qualified intermediary that assumes primary Form 1099 reporting and backup withholding responsibility but not primary withholding under chapter 3.
(F) Special rules applicable to a withholding certificate provided by a qualified intermediary that assumes primary withholding responsibility under chapter 3 and primary Form 1099 reporting and backup withholding responsibility and a withholding certificate provided by a withholding foreign partnership.
(3) Presumptions regarding payee's status in the absence of documentation.
(i) General rules.
(ii) Presumptions of classification as individual, corporation, partnership, etc.
(A) In general.
(B) No documentation provided.
(C) Documentary evidence furnished for offshore account.
(iii) Presumption of U.S. or foreign status.
(A) Payments to exempt recipients.
(B) Scholarships and grants.
(C) Pensions, annuities, etc.
(D) Certain payments to offshore accounts.
(iv) Grace period.
(v) Special rules applicable to payments to foreign intermediaries.
(A) Reliance on claim of status as foreign intermediary.
(B) Beneficial owner documentation or allocation information is lacking or unreliable.
(C) Information regarding allocation of payment is lacking or unreliable.
(D) Certification that the foreign intermediary has furnished documentation for all of the persons to whom the intermediary certificate relates is lacking or unreliable.
(vi) U.S. branches.
(vii) Joint payees.
(A) In general.
(B) Special rule for offshore accounts.
(viii) Rebuttal of presumptions.
(ix) Effect of reliance on presumptions and of actual knowledge or reason to know otherwise.
(A) General rule.
(B) Actual knowledge or reason to know that amount of withholding is greater than is required under the presumptions or that reporting of the payment is required.
(x) Examples.
(4) List of exemptions from, or reduced rates of, withholding under chapter 3 of the Code.
(5) Establishing foreign status under applicable provisions of chapter 61 of the Code.
(6) Rules of withholding for payments by a foreign intermediary or certain U.S. branches.
(i) In general.
(ii) Example.
(7) Liability for failure to obtain documentation timely or to act in accordance with applicable presumptions.
(i) General rule.
(ii) Proof that tax liability has been satisfied.
(iii) Liability for interest and penalties.
(iv) Special effective date.
(v) Examples.
(8) Adjustments, refunds, or credits of overwithheld amounts.
(9) Payments to joint owners.
(c) Definitions.
(1) Withholding.
(2) Foreign and U.S. person.
(3) Individual.
(i) Alien individual.
(ii) Nonresident alien individual.
(4) Certain foreign corporations.
(5) Financial institution and foreign financial institution.
(6) Beneficial owner.
(i) General rule.
(ii) Special rules.
(A) General rule.
(B) Foreign partnerships.
(C) Foreign simple trusts and foreign grantor trusts.
(D) Other foreign trusts and foreign estates.
(7) Withholding agent.
(8) Person.
(9) Source of income.
(10) Chapter 3 of the Code.
(11) Reduced rate.
(12) Payee.
(13) Intermediary.
(14) Nonqualified intermediary.
(15) Qualified intermediary.
(16) Withholding certificate.
(17) Documentary evidence; other appropriate documentation.
(18) Documentation.
(19) Payor.
(20) Exempt recipient.
(21) Non-exempt recipient.
(22) Reportable amounts.
(23) Flow-through entity.
(24) Foreign simple trust.
(25) Foreign complex trust.
(26) Foreign grantor trust.
(27) Partnership.
(28) Nonwithholding foreign partnership.
(29) Withholding foreign partnership.
(d) Beneficial owner's or payee's claim of U.S. status.
(1) In general.
(2) Payments for which a Form W–9 is otherwise required.
(3) Payments for which a Form W–9 is not otherwise required.

(4) When a payment to an intermediary or flow-through entity may be treated as made to a U.S. payee.
(e) Beneficial owner's claim of foreign status.
(1) Withholding agent's reliance.
(i) In general.
(ii) Payments that a withholding agent may treat as made to a foreign person that is a beneficial owner.
(A) General rule.
(B) Additional requirements.
(2) Beneficial owner withholding certificate.
(i) In general.
(ii) Requirements for validity of certificate.
(3) Intermediary, flow-through, or U.S. branch withholding certificate.
(i) In general.
(ii) Intermediary withholding certificate from a qualified intermediary.
(iii) Intermediary withholding certificate from a nonqualified intermediary.
(iv) Withholding statement provided by nonqualified Intermediary.
(A) In general.
(B) General requirements.
(C) Content of withholding statement.
(D) Alternative procedures.
(E) Notice procedures.
(v) Withholding certificate from certain U.S. branches.
(vi) Reportable amounts.
(4) Applicable rules.
(i) Who may sign the certificate.
(ii) Period of validity.
(A) Three-year period.
(B) Indefinite validity period.
(C) Withholding certificate for effectively connected income.
(D) Change in circumstances.
(iii) Retention of withholding certificate.
(iv) Electronic transmission of information.
(A) In general.
(B) Requirements.
(C) Special requirements for transmission of Forms W–8 by an intermediary. [Reserved]
(v) Electronic confirmation of taxpayer identifying number on withholding certificate.
(vi) Acceptable substitute form.
(vii) Requirement of taxpayer identifying number.
(viii) Reliance rules.
(A) Classification.
(B) Status of payee as an intermediary or as a person acting for its own account.
(ix) Certificates to be furnished for each account unless exception applies.
(A) Coordinated account information system in effect.
(B) Family of mutual funds.
(C) Special rule for brokers.
(5) Qualified intermediaries.
(i) General rule.
(ii) Definition of qualified intermediary.
(iii) Withholding agreement.
(A) In general.
(B) Terms of the withholding agreement.
(iv) Assignment of primary withholding responsibility.
(v) Withholding statement.
(A) General rule.
(B) Content of withholding statement.
(C) Withholding rate pools.
(f) Effective date.
(1) In general.
(2) Transition rules.
(i) Special rules for existing documentation.
(ii) Lack of documentation for past years.

§ 1.1441–2 Amounts subject to withholding.

(a) In general.
(b) Fixed or determinable annual or periodical income.
(1) In general.
(i) Definition.
(ii) Manner of payment.
(iii) Determinability of amount.
(2) Exceptions.
(3) Original issue discount.
(i) Amount subject to tax.
(ii) Amounts subject to withholding.
(4) Securities lending transactions and equivalent transactions.
(c) Other income subject to withholding.
(d) Exceptions to withholding where no money or property is paid or lack of knowledge.
(1) General rule.
(2) Cancellation of debt.
(3) Satisfaction of liability following underwithholding by withholding agent.
(e) Payment.
(1) General rule.
(2) Income allocated under section 482.
(3) Blocked income.
(4) Special rules for dividends.
(5) Certain interest accrued by a foreign corporation.
(6) Payments other than in U.S. dollars.
(f) Effective date.

§ 1.1441–3 Determination of amounts to be withheld.

(a) Withholding on gross amount.
(b) Withholding on payments on certain obligations.
(1) Withholding at time of payment of interest.
(2) No withholding between interest payment dates.
(i) In general.
(ii) Anti-abuse rule.
(c) Corporate distributions.
(1) General rule.
(2) Exception to withholding on distributions.
(i) In general.
(ii) Reasonable estimate of accumulated and current earnings and profits on the date of payment.
(A) General rule.

(B) Procedures in case of underwithholding.
(C) Reliance by intermediary on reasonable estimate.
(D) Example.
(3) Special rules in the case of distributions from a regulated investment company.
(i) General rule
(ii) Reliance by intermediary on reasonable estimate.
(4) Coordination with withholding under section 1445.
(i) In general.
(A) Withholding under section 1441.
(B) Withholding under both sections 1441 and 1445.
(C) Coordination with REIT withholding.
(ii) Intermediary reliance rule.
(d) Withholding on payments that include an undetermined amount of income.
(1) In general.
(2) Withholding on certain gains.
(e) Payments other than in U.S. dollars.
(1) In general.
(2) Payments in foreign currency.
(f) Tax liability of beneficial owner satisfied by withholding agent.
(1) General rule.
(2) Example.
(g) Conduit financing arrangements
(h) Effective date.

§ 1.1441–4 Exemptions from withholding for certain effectively connected income and other amounts.

(a) Certain income connected with a U.S. trade or business.
(1) In general.
(2) Withholding agent's reliance on a claim of effectively connected income.
(i) In general.
(ii) Special rules for U.S. branches of foreign persons.
(A) U.S. branches of certain foreign banks or foreign insurance companies.
(B) Other U.S. branches.
(3) Income on notional principal contracts.
(i) General rule.
(ii) Exception for certain payments.
(b) Compensation for personal services of an individual.
(1) Exemption from withholding.
(2) Manner of obtaining withholding exemption under tax treaty.
(i) In general.
(ii) Withholding certificate claiming withholding exemption.
(iii) Review by withholding agent.
(iv) Acceptance by withholding agent.
(v) Copies of Form 8233.
(3) Withholding agreements.
(4) Final payments exemption.
(i) General rule.
(ii) Final payment of compensation for personal services.
(iii) Manner of applying for final payment exemption.
(iv) Letter to withholding agent.
(5) Requirement of return.
(6) Personal exemption.
(i) In general.
(ii) Multiple exemptions.
(iii) Special rule where both certain scholarship and compensation income are received.
(c) Special rules for scholarship and fellowship income.
(1) In general.
(2) Alternate withholding election.
(d) Annuities received under qualified plans.
(e) Per diem of certain alien trainees.
(f) Failure to receive withholding certificates timely or to act in accordance with applicable presumptions.
(g) Effective date.
(1) General rule.
(2) Transition rules.

§ 1.1441–5 Withholding on payments to partnerships, trusts, and estates.

(a) In general.
(b) Rules applicable to U.S. partnerships, trusts, and estates.
(1) Payments to U.S. partnerships, trusts, and estates.
(2) Withholding by U.S. payees.
(i) U.S. partnerships.
(A) In general.
(B) Effectively connected income of partners.
(ii) U.S. simple trusts.
(iii) U.S. complex trusts and U.S. estates.
(iv) U.S. grantor trusts.
(v) Subsequent distribution.
(c) Foreign partnerships.
(1) Determination of payee.
(i) Payments treated as made to partners.
(ii) Payments treated as made to the partnership.
(iii) Rules for reliably associating a payment with documentation.
(iv) Examples.
(2) Withholding foreign partnerships.
(i) Reliance on claim of withholding foreign partnership status.
(ii) Withholding agreement.
(iii) Withholding responsibility.
(iv) Withholding certificate from a withholding foreign partnership.
(3) Nonwithholding foreign partnerships.
(i) Reliance on claim of foreign partnership status.
(ii) Reliance on claim of reduced withholding by a partnership for its partners.
(iii) Withholding certificate from a nonwithholding foreign partnership.
(iv) Withholding statement provided by nonwithholding foreign partnership.
(v) Withholding and reporting by a foreign partnership.
(d) Presumption rules.
(1) In general.
(2) Determination of partnership's status as domestic or foreign in the absence of documentation.

(3) Determination of partners' status in the absence of certain documentation.
(4) Determination by a withholding foreign partnership of the status of its partners.
(e) Foreign trusts and estates.
(1) In general.
(2) Payments to foreign complex trusts and estates.
(3) Payees of payments to foreign simple trusts and foreign grantor trusts.
(i) Payments for which beneficiaries and owners are payees.
(ii) Payments for which trust is payee.
(4) Reliance on claim of foreign complex trust or foreign estate status.
(5) Foreign simple trust and foreign grantor trust.
(i) Reliance on claim of foreign simple trust or foreign grantor trust status.
(ii) Reliance on claim of reduced withholding by a foreign simple trust or foreign grantor trust for its beneficiaries or owners.
(iii) Withholding certificate from foreign simple trust or foreign grantor trust.
(iv) Withholding statement provided by a foreign simple trust or foreign grantor trust.
(v) Withholding foreign trusts.
(6) Presumption rules.
(i) In general.
(ii) Determination of status as U.S. or foreign trust or estate in the absence of documentation.
(iii) Determination of beneficiary or owner's status in the absence of certain documentation.
(f) Failure to receive withholding certificate timely or to act in accordance with applicable presumptions.
(g) Effective date.
(1) General rule.
(2) Transition rules.

§ 1.1441–6 Claim of reduced withholding under an income tax treaty.

(a) In general.
(b) Reliance on claim of reduced withholding under an income tax treaty.
(1) In general.
(2) Payment to fiscally transparent entity.
(i) In general.
(ii) Certification by qualified intermediary.
(iii) Dual treatment.
(iv) Examples.
(3) Certified TIN.
(4) Claim of benefits under an income tax treaty by a U.S. person.
(c) Exemption from requirement to furnish a taxpayer identifying number and special documentary evidence rules for certain income.
(1) In general.
(2) Income to which special rules apply.
(3) Certificate of residence.
(4) Documentary evidence establishing residence in the treaty country.
(i) Individuals.
(ii) Persons other than individuals.
(5) Statements regarding entitlement to treaty benefits.
(i) Statement regarding conditions under a limitation on benefits provision.
(ii) Statement regarding whether the taxpayer derives the income.
(d) Joint owners.
(e) Competent authority.
(f) Failure to receive withholding certificate timely.
(g) Effective date.
(1) General rule.
(2) Transition rules.

§ 1.1441–7 General provisions relating to withholding agents.

(a) Withholding agent defined.
(1) In general.
(2) Examples.
(b) Standards of knowledge.
(1) In general.
(2) Reason to know.
(3) Financial institutions—limits on reason to know.
(4) Rules applicable to withholding certificates.
(i) In general.
(ii) Examples.
(5) Withholding certificate—establishment of foreign status.
(6) Withholding certificate—claim of reduced rate of withholding under treaty.
(7) Documentary evidence.
(8) Documentary evidence—establishment of foreign status.
(9) Documentary evidence—claim of reduced rate of withholding under treaty.
(10) Limits on reason to know—indirect account holders.
(11) Additional guidance.
(c) Authorized agent.
(1) In general.
(2) Authorized foreign agent.
(3) Notification.
(4) Liability of U.S. withholding agent.
(5) Filing of returns.
(d) United States obligations.
(e) Assumed obligations.
(f) Conduit financing arrangements.
(g) Effective date.

§ 1.1441–8 Exemption from withholding for payments to foreign governments, international organizations, foreign central banks of issue, and the Bank for International Settlements.

(a) Foreign governments.
(b) Reliance on claim of exemption by foreign government.
(c) Income of a foreign central bank of issue or the Bank for International Settlements.
(1) Certain interest income.

(2) Bankers' acceptances.
(d) Exemption for payments to international organizations.
(e) Failure to receive withholding certificate timely and other applicable procedures.
(f) Effective date.
(1) In general.
(2) Transition rules.

§ 1.1441–9 Exemption from withholding on exempt income of a foreign tax-exempt organization, including foreign private foundations.

(a) Exemption from withholding for exempt income.
(b) Reliance on foreign organization's claim of exemption from withholding.
(1) General rule.
(2) Withholding certificate.
(3) Presumptions in the absence of documentation.
(4) Reason to know.
(c) Failure to receive withholding certificate timely and other applicable procedures.
(d) Effective date.
(1) In general.
(2) Transition rules.

[T.D. 8734, 62 FR 53421, Oct. 14, 1997, as amended by T.D. 8881, 66 FR 32168, May 22, 2000]

§ 1.1441–1 Requirement for the deduction and withholding of tax on payments to foreign persons.

(a) *Purpose and scope.* This section, §§ 1.1441–2 through 1.1441–9, and 1.1443–1 provide rules for withholding under sections 1441, 1442, and 1443 when a payment is made to a foreign person. This section provides definitions of terms used in chapter 3 of the Internal Revenue Code (Code) and regulations thereunder. It prescribes procedures to determine whether an amount must be withheld under chapter 3 of the Code and documentation that a withholding agent may rely upon to determine the status of a payee or a beneficial owner as a U.S. person or as a foreign person and other relevant characteristics of the payee that may affect a withholding agent's obligation to withhold under chapter 3 of the Code and the regulations thereunder. Special procedures regarding payments to foreign persons that act as intermediaries are also provided. Section 1.1441–2 defines the income subject to withholding under section 1441, 1442, and 1443 and the regulations under these sections. Section 1.1441–3 provides rules regarding the amount subject to withholding. Section 1.1441–4 provides exemptions from withholding for, among other things, certain income effectively connected with the conduct of a trade or business in the United States, including certain compensation for the personal services of an individual. Section 1.1441–5 provides rules for withholding on payments made to flow-through entities and other similar arrangements. Section 1.1441–6 provides rules for claiming a reduced rate of withholding under an income tax treaty. Section 1.1441–7 defines the term *withholding agent* and provides due diligence rules governing a withholding agent's obligation to withhold. Section 1.1441–8 provides rules for relying on claims of exemption from withholding for payments to a foreign government, an international organization, a foreign central bank of issue, or the Bank for International Settlements. Sections 1.1441–9 and 1.1443–1 provide rules for relying on claims of exemption from withholding for payments to foreign tax exempt organizations and foreign private foundations.

(b) *General rules of withholding*—(1) *Requirement to withhold on payments to foreign persons.* A withholding agent must withhold 30-percent of any payment of an amount subject to withholding made to a payee that is a foreign person unless it can reliably associate the payment with documentation upon which it can rely to treat the payment as made to a payee that is a U.S. person or as made to a beneficial owner that is a foreign person entitled to a reduced rate of withholding. However, a withholding agent making a payment to a foreign person need not withhold where the foreign person assumes responsibility for withholding on the payment under chapter 3 of the Code and the regulations thereunder as a qualified intermediary (see paragraph (e)(5) of this section), as a U.S. branch of a foreign person (see paragraph (b)(2)(iv) of this section), as a withholding foreign partnership (see § 1.1441–5(c)(2)(i)), or as an authorized foreign agent (see § 1.1441–7(c)(1)). This section (dealing with general rules of withholding and claims of foreign or U.S. status by a payee or a beneficial owner), and §§ 1.1441–4, 1.1441–5, 1.1441–6, 1.1441–8, 1.1441–9, and 1.1443–1 provide rules for determining whether documentation is required as a condition for reducing the rate of withholding on

a payment to a foreign beneficial owner or to a U.S. payee and if so, the nature of the documentation upon which a withholding agent may rely in order to reduce such rate. Paragraph (b)(2) of this section prescribes the rules for determining who the payee is, the extent to which a payment is treated as made to a foreign payee, and reliable association of a payment with documentation. Paragraph (b)(3) of this section describes the applicable presumptions for determining the payee's status as U.S. or foreign and the payee's other characteristics (i.e., as an owner or intermediary, as an individual, partnership, corporation, etc.). Paragraph (b)(4) of this section lists the types of payments for which the 30-percent withholding rate may be reduced. Because the treatment of a payee as a U.S. or a foreign person also has consequences for purposes of making an information return under the provisions of chapter 61 of the Code and for withholding under other provisions of the Code, such as sections 3402, 3405 or 3406, paragraph (b)(5) of this section lists applicable provisions outside chapter 3 of the Code that require certain payees to establish their foreign status (e.g., in order to be exempt from information reporting). Paragraph (b)(6) of this section describes the withholding obligations of a foreign person making a payment that it has received in its capacity as an intermediary. Paragraph (b)(7) of this section describes the liability of a withholding agent that fails to withhold at the required 30-percent rate in the absence of documentation. Paragraph (b)(8) of this section deals with adjustments and refunds in the case of overwithholding. Paragraph (b)(9) of this section deals with determining the status of the payee when the payment is jointly owned. See paragraph (c)(6) of this section for a definition of beneficial owner. See §1.1441–7(a) for a definition of withholding agent. See §1.1441–2(a) for the determination of an amount subject to withholding. See §1.1441–2(e) for the definition of a payment and when it is considered made. Except as otherwise provided, the provisions of this section apply only for purposes of determining a withholding agent's obligation to withhold under chapter 3 of the Code and the regulations thereunder.

(2) *Determination of payee and payee's status*—(i) *In general.* Except as otherwise provided in this paragraph (b)(2) and §1.1441–5(c)(1) and (e)(3), a payee is the person to whom a payment is made, regardless of whether such person is the beneficial owner of the amount (as defined in paragraph (c)(6) of this section). A foreign payee is a payee who is a foreign person. A U.S. payee is a payee who is a U.S. person. Generally, the determination by a withholding agent of the U.S. or foreign status of a payee and of its other relevant characteristics (e.g., as a beneficial owner or intermediary, or as an individual, corporation, or flow-through entity) is made on the basis of a withholding certificate that is a Form W–8 or a Form 8233 (indicating foreign status of the payee or beneficial owner) or a Form W–9 (indicating U.S. status of the payee). The provisions of this paragraph (b)(2), paragraph (b)(3) of this section, and §1.1441–5 (c), (d), and (e) dealing with determinations of payee and applicable presumptions in the absence of documentation, apply only to payments of amounts subject to withholding under chapter 3 of the Code (within the meaning of §1.1441–2(a)). Similar payee and presumption provisions are set forth under §1.6049–5(d) for payments of amounts that are not subject to withholding under chapter 3 of the Code (or the regulations thereunder) but that may be reportable under provisions of chapter 61 of the Code (and the regulations thereunder). See paragraph (d) of this section for documentation upon which the withholding agent may rely in order to treat the payee or beneficial owner as a U.S. person. See paragraph (e) of this section for documentation upon which the withholding agent may rely in order to treat the payee or beneficial owner as a foreign person. For applicable presumptions of status in the absence of documentation, see paragraph (b)(3) of this section and §1.1441–5(d). For definitions of a foreign person and U.S. person, see paragraph (c)(2) of this section.

(ii) *Payments to a U.S. agent of a foreign person.* A withholding agent making a payment to a U.S. person (other

than to a U.S. branch that is treated as a U.S. person pursuant to paragraph (b)(2)(iv) of this section) and who has actual knowledge that the U.S. person receives the payment as an agent of a foreign person must treat the payment as made to the foreign person. However, the withholding agent may treat the payment as made to the U.S. person if the U.S. person is a financial institution and the withholding agent has no reason to believe that the financial institution will not comply with its obligation to withhold. See paragraph (c)(5) of this section for the definition of a financial institution.

(iii) *Payments to wholly-owned entities*—(A) *Foreign-owned domestic entity.* A payment to a wholly-owned domestic entity that is disregarded for federal tax purposes under § 301.7701–2(c)(2) of this chapter as an entity separate from its owner and whose single owner is a foreign person shall be treated as a payment to the owner of the entity, subject to the provisions of paragraph (b)(2)(iv) of this section. For purposes of this paragraph (b)(2)(iii)(A), a domestic entity means a person that would be treated as a U.S. person if it had an election in effect under § 301.7701–3(c)(1)(i) of this chapter to be treated as a corporation. For example, a limited liability company, A, organized under the laws of the State of Delaware, opens an account at a U.S. bank. Upon opening of the account, the bank requests A to furnish a Form W–9 as required under section 6049(a) and the regulations under that section. A does not have an election in effect under § 301.7701–3(c)(1)(i) of this chapter and, therefore, is not treated as an organization taxable as a corporation, including for purposes of the exempt recipient provisions in § 1.6049–4(c)(1). If A has a single owner and the owner is a foreign person (as defined in paragraph (c)(2) of this section), then A may not furnish a Form W–9 because it may not represent that it is a U.S. person for purposes of the provisions of chapters 3 and 61 of the Code, and section 3406. Therefore, A must furnish a Form W–8 with the name, address, and taxpayer identifying number (TIN) (if required) of the foreign person who is the single owner in the same manner as if the account were opened directly by the foreign single owner. See §§ 1.894–1T(d) and 1.1441–6(b)(2) for special rules where the entity's owner is claiming a reduced rate of withholding under an income tax treaty.

(B) *Foreign entity.* A payment to a wholly-owned foreign entity that is disregarded under § 301.7701–2(c)(2) of this chapter as an entity separate from its owner shall be treated as a payment to the single owner of the entity, subject to the provisions of paragraph (b)(2)(iv) of this section if the foreign entity has a U.S. branch in the United States. For purposes of this paragraph (b)(2)(iii)(B), a foreign entity means a person that would be treated as a foreign person if it had an election in effect under § 301.7701–3(c)(1)(i) of this chapter to be treated as a corporation. See §§ 1.894–1T(d) and 1.1441–6(b)(2) for special rules where the foreign entity or its owner is claiming a reduced rate of withholding under an income tax treaty. Thus, for example, if the foreign entity's single owner is a U.S. person, the payment shall be treated as a payment to a U.S. person. Therefore, based on the saving clause in U.S. income tax treaties, such an entity may not claim benefits under an income tax treaty even if the entity is organized in a country with which the United States has an income tax treaty in effect and treats the entity as a non-fiscally transparent entity. See § 1.894–1T(d)(6), *Example 10*. Unless it has actual knowledge or reason to know that the foreign entity to whom the payment is made is disregarded under § 301.7701–2(c)(2) of this chapter, a withholding agent may treat a foreign entity as an entity separate from its owner unless it can reliably associate the payment with a withholding certificate from the entity's owner.

(iv) *Payments to a U.S. branch of certain foreign banks or foreign insurance companies*—(A) *U.S. branch treated as a U.S. person in certain cases.* A payment to a U.S. branch of a foreign person is a payment to a foreign person. However, a U.S. branch described in this paragraph (b)(2)(iv)(A) and a withholding agent (including another U.S. branch described in this paragraph (b)(2)(iv)(A)) may agree to treat the branch as a U.S. person for purposes of withholding on specified payments to

the U.S. branch. Notwithstanding the preceding sentence, a withholding agent making a payment to a U.S. branch treated as a U.S. person under this paragraph (b)(2)(iv)(A) shall not treat the branch as a U.S. person for purposes of reporting the payment made to the branch. Therefore, a payment to such U.S. branch shall be reported on Form 1042–S under § 1.1461–1(c). Further, a U.S. branch that is treated as a U.S. person under this paragraph (b)(2)(iv)(A) shall not be treated as a U.S. person for purposes of the withholding certificate it may provide to a withholding agent. Therefore, the U.S. branch must furnish a U.S. branch withholding certificate on Form W–8 as provided in paragraph (e)(3)(v) of this section and not a Form W–9. An agreement to treat a U.S. branch as a U.S. person must be evidenced by a U.S. branch withholding certificate described in paragraph (e)(3)(v) of this section furnished by the U.S. branch to the withholding agent. A U.S. branch described in this paragraph (b)(2)(iv)(A) is any U.S. branch of a foreign bank subject to regulatory supervision by the Federal Reserve Board or a U.S. branch of a foreign insurance company required to file an annual statement on a form approved by the National Association of Insurance Commissioners with the Insurance Department of a State, a Territory, or the District of Columbia. The Internal Revenue Service (IRS) may approve a list of U.S. branches that may qualify for treatment as a U.S. person under this paragraph (b)(2)(iv)(A) (see § 601.601(d)(2) of this chapter). See § 1.6049–5(c)(5)(vi) for the treatment of U.S. branches as U.S. payors if they make a payment that is subject to reporting under chapter 61 of the Internal Revenue Code. Also see § 1.6049–5(d)(1)(ii) for the treatment of U.S. branches as foreign payees under chapter 61 of the Internal Revenue Code.

(B) *Consequences to the withholding agent.* Any person that is otherwise a withholding agent regarding a payment to a U.S. branch described in paragraph (b)(2)(iv)(A) of this section shall treat the payment in one of the following ways—

(*1*) As a payment to a U.S. person, in which case the withholding agent is not responsible for withholding on such payment to the extent it can reliably associate the payment with a withholding certificate described in paragraph (e)(3)(v) of this section that has been furnished by the U.S. branch under its agreement with the withholding agent to be treated as a U.S. person;

(*2*) As a payment directly to the persons whose names are on withholding certificates or other appropriate documentation forwarded by the U.S. branch to the withholding agent when no agreement is in effect to treat the U.S. branch as a U.S. person for such payment, to the extent the withholding agent can reliably associate the payment with such certificates or documentation; or

(*3*) As a payment to a foreign person of income that is effectively connected with the conduct of a trade or business in the United States if the withholding agent cannot reliably associate the payment with a withholding certificate from the U.S. branch or any other certificate or other appropriate documentation from another person. See § 1.1441–4(a)(2)(ii).

(C) *Consequences to the U.S. branch.* A U.S. branch that is treated as a U.S. person under paragraph (b)(2)(iv)(A) of this section shall be treated as a separate person solely for purposes of section 1441(a) and all other provisions of chapter 3 of the Internal Revenue Code and the regulations thereunder (other than for purposes of reporting the payment to the U.S. branch under § 1.1461–1(c) or for purposes of the documentation such a branch must furnish under paragraph (e)(3)(v) of this section) for any payment that it receives as such. Thus, the U.S. branch shall be responsible for withholding on the payment in accordance with the provisions under chapter 3 of the Internal Revenue Code and the regulations thereunder and other applicable withholding provisions of the Internal Revenue Code. For this purpose, it shall obtain and retain documentation from payees or beneficial owners of the payments that it receives as a U.S. person in the same manner as if it were a separate entity. For example, if a U.S. branch

receives a payment on behalf of its home office and the home office is a qualified intermediary, the U.S. branch must obtain a qualified intermediary withholding certificate described in paragraph (e)(3)(ii) of this section from its home office. In addition, a U.S. branch that has not provided documentation to the withholding agent for a payment that is, in fact, not effectively connected income is a withholding agent with respect to that payment. See paragraph (b)(6) of this section and § 1.1441–4(a)(2)(ii).

(D) *Definition of payment to a U.S. branch.* A payment is treated as a payment to a U.S. branch of a foreign bank or foreign insurance company if the payment is credited to an account maintained in the United States in the name of a U.S. branch of the foreign person, or the payment is made to an address in the United States where the U.S. branch is located and the name of the U.S. branch appears on documents (in written or electronic form) associated with the payment (e.g., the check mailed or a letter addressed to the branch).

(E) *Payments to other U.S. branches.* Similar withholding procedures may apply to payments to U.S. branches that are not described in paragraph (b)(2)(iv)(A) of this section to the extent permitted by the district director or the Assistant Commissioner (International). Any such branch must establish that its situation is analogous to that of a U.S. branch described in paragraph (b)(2)(iv)(A) of this section regarding its registration with, and regulation by, a U.S. governmental institution, the type and amounts of assets it is required to, or actually maintains in the United States, and the personnel who carry out the activities of the branch in the United States. In the alternative, the branch must establish that the withholding and reporting requirements under chapter 3 of the Code and the regulations thereunder impose an undue administrative burden and that the collection of the tax imposed by section 871(a) or 881(a) on the foreign person (or its members in the case of a foreign partnership) will not be jeopardized by the exemption from withholding. Generally, an undue administrative burden will be found to exist in a case where the person entitled to the income, such as a foreign insurance company, receives from the withholding agent income on securities issued by a single corporation, some of which is, and some of which is not, effectively connected with conduct of a trade or business within the United States and the criteria for determining the effective connection are unduly difficult to apply because of the circumstances under which such securities are held. No exemption from withholding shall be granted under this paragraph (b)(2)(iv)(E) unless the person entitled to the income complies with such other requirements as may be imposed by the district director or the Assistant Commissioner (International) and unless the district director or the Assistant Commissioner (International) is satisfied that the collection of the tax on the income involved will not be jeopardized by the exemption from withholding. The IRS may prescribe such procedures as are necessary to make these determinations (see § 601.601(d)(2) of this chapter).

(v) *Payments to a foreign intermediary*—(A) *Payments treated as made to persons for whom the intermediary collects the payment.* Except as otherwise provided in paragraph (b)(2)(v)(B) of this section, the payee of a payment to a person that the withholding agent may treat as a foreign intermediary in accordance with the provisions of paragraph (b)(3)(ii)(C) or (b)(3)(v)(A) of this section is the person or persons for whom the intermediary collects the payment. Thus, for example, the payee of a payment that the withholding agent can reliably associate with a withholding certificate from a qualified intermediary (defined in paragraph (e)(5)(ii) of this section) that does not assume primary withholding responsibility or a payment to a nonqualified intermediary are the persons for whom the qualified intermediary or nonqualified intermediary acts and not to the intermediary itself. See paragraph (b)(3)(v) of this section for presumptions that apply if the payment cannot be reliably associated with valid documentation. For similar rules for payments to flow-through entities, see § 1.1441–5(c)(1) and (e)(3).

(B) *Payments treated as made to foreign intermediary*. The payee of a payment to a person that the withholding agent may treat as a qualified intermediary is the qualified intermediary to the extent that the qualified intermediary assumes primary withholding responsibility under paragraph (e)(5)(iv) of this section for the payment. For example if a qualified intermediary assumes primary withholding responsibility under chapter 3 of the Internal Revenue Code but does not assume primary reporting or withholding responsibility under chapter 61 or section 3406 of the Internal Revenue Code and therefore provides Forms W–9 for U.S. non-exempt recipients, the qualified intermediary is the payee except to the extent the payment is reliably associated with a Form W–9 from a U.S. non-exempt recipient.

(vi) *Other payees*. A payment to a person described in §1.6049–4(c)(1)(ii) that the withholding agent would treat as a payment to a foreign person without obtaining documentation for purposes of information reporting under section 6049 (if the payment were interest) is treated as a payment to a foreign payee for purposes of chapter 3 of the Code and the regulations thereunder (or to a foreign beneficial owner to the extent provided in paragraph (e)(1)(ii)(A) (*6*) or (*7*) of this section). Further, payments that the withholding agent can reliably associate with documentary evidence described in §1.6049–5(c)(1) relating to the payee is treated as a payment to a foreign payee. A payment that the withholding agent may treat as a payment to an authorized foreign agent (as defined in §1.1441–7(c)(2)) is treated as a payment to the agent and not to the persons for whom the agent collects the payment. See §1.1441–5 (b)(1) and (c)(1) for payee determinations for payments to partnerships. See §1.1441–5(e) for payee determinations for payments to foreign trusts or foreign estates.

(vii) *Rules for reliably associating a payment with a withholding certificate or other appropriate documentation*—(A) *Generally*. The presumption rules of paragraph (b)(3) of this section and §§1.1441–5(d) and (e)(6) and 1.6049–5(d) apply to any payment, or portion of a payment, that a withholding agent cannot reliably associate with valid documentation. Generally, a withholding agent can reliably associate a payment with valid documentation if, prior to the payment, it holds valid documentation (either directly or through an agent), it can reliably determine how much of the payment relates to the valid documentation, and it has no actual knowledge or reason to know that any of the information, certifications, or statements in, or associated with, the documentation are incorrect. Special rules apply for payments made to intermediaries, flow-through entities, and certain U.S. branches. See paragraph (b)(2)(vii)(B) through (F) of this section. The documentation referred to in this paragraph (b)(2)(vii) is documentation described in paragraphs (c)(16) and (17) of this section upon which a withholding agent may rely to treat the payment as a payment made to a payee or beneficial owner, and to ascertain the characteristics of the payee or beneficial owner that are relevant to withholding or reporting under chapter 3 of the Internal Revenue Code and the regulations thereunder. For purposes of this paragraph (b)(2)(vii), documentation also includes the agreement that the withholding agent has in effect with an authorized foreign agent in accordance with §1.1441–7(c)(2)(i). A withholding agent that is not required to obtain documentation with respect to a payment is considered to lack documentation for purposes of this paragraph (b)(2)(vii). For example, a withholding agent paying U.S. source interest to a person that is an exempt recipient, as defined in §1.6049–4(c)(1)(ii), is not required to obtain documentation from that person in order to determine whether an amount paid to that person is reportable under an applicable information reporting provision under chapter 61 of the Internal Revenue Code. The withholding agent must, however, treat the payment as made to an undocumented person for purposes of chapter 3 of the Internal Revenue Code. Therefore, the presumption rules of paragraph (b)(3)(iii) of this section apply to determine whether the person is presumed to be a U.S. person (in which case, no withholding is required

under this section), or whether the person is presumed to be a foreign person (in which case 30-percent withholding is required under this section). See paragraph (b)(3)(v) of this section for special reliance rules in the case of a payment to a foreign intermediary and §1.1441–5(d) and (e)(6) for special reliance rules in the case of a payment to a flow-through entity.

(B) *Special rules applicable to a withholding certificate from a nonqualified intermediary or flow-through entity.* (*1*) In the case of a payment made to a nonqualified intermediary, a flow-through entity (as defined in paragraph (c)(23) of this section), and a U.S. branch described in paragraph (b)(2)(iv) of this section (other than a branch that is treated as a U.S. person), a withholding agent can reliably associate the payment with valid documentation only to the extent that, prior to the payment, the withholding agent can allocate the payment to a valid nonqualified intermediary, flow-through, or U.S. branch withholding certificate; the withholding agent can reliably determine how much of the payment relates to valid documentation provided by a payee as determined under paragraph (c)(12) of this section (i.e., a person that is not itself an intermediary, flow-through entity, or U.S. branch); and the withholding agent has sufficient information to report the payment on Form 1042–S or Form 1099, if reporting is required. See paragraph (e)(3)(iii) of this section for the requirements of a nonqualified intermediary withholding certificate, paragraph (e)(3)(v) of this section for the requirements of a U.S. branch certificate, and §§1.1441–5(c)(3)(iii) and (e)(5)(iii) for the requirements of a flow-through withholding certificate. Thus, a payment cannot be reliably associated with valid documentation provided by a payee to the extent such documentation is lacking or unreliable, or to the extent that information required to allocate and report all or a portion of the payment to each payee is lacking or unreliable. If a withholding certificate attached to an intermediary, U.S. branch, or flow-through withholding certificate is another intermediary, U.S. branch, or flow-through withholding certificate, the rules of this paragraph (b)(2)(vii)(B) apply by treating the share of the payment allocable to the other intermediary, U.S. branch, or flow-through entity as if the payment were made directly to such other entity. See paragraph (e)(3)(iv)(D) of this section for rules permitting information allocating a payment to documentation to be received after the payment is made.

(*2*) The rules of paragraph (b)(2)(vii)(B)(*1*) of this section are illustrated by the following examples:

Example 1. WH, a withholding agent, makes a payment of U.S. source interest to NQI, an intermediary that is a nonqualified intermediary. NQI provides a valid intermediary withholding certificate under paragraph (e)(3)(iii) of this section. NQI does not, however, provide valid documentation from the persons on whose behalf it receives the interest payment, and, therefore, the interest payment cannot be reliably associated with valid documentation provided by a payee. WH must apply the presumption rules of paragraph (b)(3)(v) of this section to the payment.

Example 2. The facts are the same as in *Example 1*, except that NQI does attach valid beneficial owner withholding certificates (as defined in paragraph (e)(2)(i) of this section) from A, B, C, and D establishing their status as foreign persons. NQI does not, however, provide WH with any information allocating the payment among A, B, C, and D and, therefore, WH cannot determine the portion of the payment that relates to each beneficial owner withholding certificate. The interest payment cannot be reliably associated with valid documentation from a payee and WH must apply the presumption rules of paragraph (b)(3)(v) of this section to the payment. See, however, paragraph (e)(3)(iv)(D) of this section providing special rules permitting allocation information to be received after a payment is made.

Example 3. The facts are the same as in Example 2, except that NQI does provide allocation information associated with its intermediary withholding certificate indicating that 25 percent of the interest payment is allocable to A and 25 percent to B. NQI does not provide any allocation information regarding the remaining 50 percent of the payment. WH may treat 25 percent of the payment as made to A and 25 percent as made to B. The remaining 50 percent of the payment cannot be reliably associated with valid documentation from a payee, however, since NQI did not provide information allocating the payment. Thus, the remaining 50 percent of the payment is subject to the presumption rules of paragraph (b)(3)(v) of this section.

Example 4. WH makes a payment of U.S. source interest to NQI1, an intermediary that is not a qualified intermediary. NQI1 provides WH with a valid nonqualified intermediary withholding certificate as well a valid beneficial owner withholding certificates from A and B and a valid nonqualified intermediary withholding certificate from NQI2. NQI2 has provided valid beneficial owner documentation from C sufficient to establish C's status as a foreign person. Based on information provided by NQI1, WH can allocate 20 percent of the interest payment to A, and 20 percent to B. Based on information that NQI2 provided NQI1 and that NQI1 provides to WH, WH can allocate 60 percent of the payment to NQI 2, but can only allocate one half of that payment (30 percent) to C. Therefore, WH cannot reliably associate 30 percent of the payment made to NQI2 with valid documentation and must apply the presumption rules of paragraph (b)(3)(v) of this section to that portion of the payment.

(C) *Special rules applicable to a withholding certificate provided by a qualified intermediary that does not assume primary withholding responsibility.* (*1*) If a payment is made to a qualified intermediary that does not assume primary withholding responsibility under chapter 3 of the Internal Revenue Code or primary Form 1099 reporting and backup withholding responsibility under chapter 61 and section 3406 of the Internal Revenue Code for the payment, a withholding agent can reliably associate the payment with valid documentation only to the extent that, prior to the payment, the withholding agent has received a valid qualified intermediary withholding certificate and the withholding agent can reliably determine the portion of the payment that relates to a withholding rate pool, as defined in paragraph (e)(5)(v)(C) of this section. In the case of a withholding rate pool attributable to a U.S. non-exempt recipient, a payment cannot be reliably associated with valid documentation unless, prior to the payment, the qualified intermediary has provided the U.S. person's Form W–9 (or, in the absence of the form, the name, address, and TIN, if available, of the U.S. person) and sufficient information for the withholding agent to report the payment on Form 1099. See paragraph (e)(5)(v)(C)(*2*) of this section for special rules regarding allocation of payments among U.S. non-exempt recipients.

(*2*) The rules of this paragraph (b)(2)(vii)(C) are illustrated by the following examples:

Example 1. WH, a withholding agent, makes a payment of U.S. source dividends to QI. QI provides WH with a valid qualified intermediary withholding certificate on which it indicates that it does not assume primary withholding responsibility under chapter 3 of the Internal Revenue Code or primary Form 1099 reporting and backup withholding responsibility under chapter 61 and section 3406 of the Internal Revenue Code. QI does not provide any information allocating the dividend to withholding rate pools. WH cannot reliably associate the payment with valid payee documentation and therefore must apply the presumption rules of paragraph (b)(3)(v) of this section.

Example 2. WH makes a payment of U.S. source dividends to QI. QI has 5 customers: A, B, C, D, and E. QI has obtained documentation from A and B establishing their entitlement to a 15 percent rate of tax on U.S. source dividends under an income tax treaty. C is a U.S. person that is an exempt recipient as defined in paragraph (c)(20) of this section. D and E are U.S. non-exempt recipients who have provided Forms W–9 to QI. A, B, C, D, and E are each entitled to 20 percent of the dividend payment. QI provides WH with a valid qualified intermediary withholding certificate as described in paragraph (e)(2)(ii) of this section with which it associates the Forms W–9 from D and E. QI associates the following allocation information with its qualified intermediary withholding certificate: 40 percent of the payment is allocable to the 15 percent withholding rate pool, and 20 percent is allocable to each of D and E. QI does not provide any allocation information regarding the remaining 20 percent of the payment. WH cannot reliably associate 20 percent of the payment with valid documentation and, therefore, must apply the presumption rules of paragraph (b)(3)(v) of this section to that portion of the payment. The 20 percent of the payment allocable to the 15 percent withholding rate pool, and the portion of the payments allocable to D and E are payments that can be reliably associated with documentation.

(D) *Special rules applicable to a withholding certificate provided by a qualified intermediary that assumes primary withholding responsibility under chapter 3 of the Internal Revenue Code.* (*1*) In the case of a payment made to a qualified intermediary that assumes primary withholding responsibility under chapter 3 of the Internal Revenue Code with respect to that payment (but does not

assume primary Form 1099 reporting and backup withholding responsibility under chapter 61 and section 3406 of the Internal Revenue Code), a withholding agent can reliably associate the payment with valid documentation only to the extent that, prior to the payment, the withholding agent has received a valid qualified intermediary withholding certificate and the withholding agent can reliably determine the portion of the payment that relates to the withholding rate pool for which the qualified intermediary assumes primary withholding responsibility under chapter 3 of the Internal Revenue Code and the portion of the payment attributable to withholding rate pools for each U.S. non-exempt recipient for whom the qualified intermediary has provided a Form W–9 (or, in absence of the form, the name, address, and TIN, if available, of the U.S. non-exempt recipient). See paragraph (e)(5)(v)(C)(*2*) of this section for alternative allocation procedures for payments made to U.S. persons that are not exempt recipients.

(*2*) *Examples*. The following examples illustrate the rules of paragraph (b)(2)(vii)(D)(*1*) of this section:

Example 1. WH makes a payment of U.S. source interest to QI, a qualified intermediary. QI provides WH with a withholding certificate that indicates that QI will assume primary withholding responsibility under chapter 3 of the Internal Revenue Code with respect to the payment. In addition, QI attaches a Form W–9 from A, a U.S. non-exempt recipient, as defined in paragraph (c)(21) of this section, and provides the name, address, and TIN of B, a U.S. person that is also a non-exempt recipient but who has not provided a Form W–9. QI associates a withholding statement with its qualified intermediary withholding certificate indicating that 10 percent of the payment is attributable to A, and 10 percent to B, and that QI will assume primary withholding responsibility with respect to the remaining 80 percent of the payment. WH can reliably associate the entire payment with valid documentation. Although under the presumption rule of paragraph (b)(3)(v) of this section, an undocumented person receiving U.S. source interest is generally presumed to be a foreign person, WH has actual knowledge that B is a U.S. non-exempt recipient and therefore must report the payment on Form 1099 and backup withhold on the interest payment under section 3406.

Example 2. The facts are the same as in *Example 1*, except that no Forms W–9 or other information have been provided for the 20 percent of the payment that is allocable to A and B. Thus, QI has accepted withholding responsibility for 80 percent of the payment, but has provided no information for the remaining 20 percent. In this case, 20 percent of the payment cannot be reliably associated with valid documentation, and WH must apply the presumption rule of paragraph (b)(3)(v) of this section.

(E) *Special rules applicable to a withholding certificate provided by a qualified intermediary that assumes primary Form 1099 reporting and backup withholding responsibility but not primary withholding under chapter 3*. (*1*) If a payment is made to a qualified intermediary that assumes primary Form 1099 reporting and backup withholding responsibility for the payment (but does not assume primary withholding responsibility under chapter 3 of the Internal Revenue Code), a withholding agent can reliably associate the payment with valid documentation only to the extent that, prior to the payment, the withholding agent has received a valid qualified intermediary withholding certificate and the withholding agent can reliably determine the portion of the payment that relates to a withholding rate pool or pools provided as part of the qualified intermediary's withholding statement and the portion of the payment for which the qualified intermediary assumes primary Form 1099 reporting and backup withholding responsibility.

(*2*) The following example illustrates the rules of paragraph (b)(2)((vii)(D)(*1*) of this section:

Example. WH makes a payment of U.S. source dividends to QI, a qualified intermediary. QI has provided WH with a valid qualified intermediary withholding certificate. QI states on its withholding statement accompanying the certificate that it assumes primary Form 1099 reporting and backup withholding responsibility but does not assume primary withholding responsibility under chapter 3 of the Internal Revenue Code. QI represents that 15 percent of the dividend is subject to a 30 percent rate of withholding, 75 percent of the dividend is subject to a 15 percent rate of withholding, and that QI assumed primary Form 1099 reporting and backup withholding for the remaining 10 percent of the payment. The entire payment can be reliably associated with valid documentation.

(F) *Special rules applicable to a withholding certificate provided by a qualified*

intermediary that assumes primary withholding responsibility under chapter 3 and primary Form 1099 reporting and backup withholding responsibility and a withholding certificate provided by a withholding foreign partnership. If a payment is made to a qualified intermediary that assumes both primary withholding responsibility under chapter 3 of the Internal Revenue Code and primary Form 1099 reporting and backup withholding responsibility under chapter 61 and section 3406 of the Internal Revenue Code for the payment, a withholding agent can reliably associate a payment with valid documentation provided that it receives a valid qualified intermediary withholding certificate as described in paragraph (e)(3)(ii) of this section. In the case of a payment made to a withholding foreign partnership, the withholding agent can reliably associate the payment with valid documentation to the extent it can associate the payment with a valid withholding certificate described in §1.1441–5(c)(2)(iv).

(3) *Presumptions regarding payee's status in the absence of documentation*—(i) *General rules.* A withholding agent that cannot, prior to the payment, reliably associate (within the meaning of paragraph (b)(2)(vii) of this section) a payment of an amount subject to withholding (as described in §1.1441–2(a)) with valid documentation may rely on the presumptions of this paragraph (b)(3) to determine the status of the payee as a U.S. or a foreign person and the payee's other relevant characteristics (e.g., as an owner or intermediary, as an individual, trust, partnership, or corporation). The determination of withholding and reporting requirements applicable to payments to a person presumed to be a foreign person is governed only by the provisions of chapter 3 of the Code and the regulations thereunder. For the determination of withholding and reporting requirements applicable to payments to a person presumed to be a U.S. person, see chapter 61 of the Code, section 3402, 3405, or 3406, and the regulations under these provisions. A presumption that a payee is a foreign payee is not a presumption that the payee is a foreign beneficial owner. Therefore, the provisions of this paragraph (b)(3) have no effect for purposes of reducing the withholding rate if associating the payment with documentation of foreign beneficial ownership is required as a condition for such rate reduction. See paragraph (b)(3)(ix) of this section for consequences to a withholding agent that fails to withhold in accordance with the presumptions set forth in this paragraph (b)(3) or if the withholding agent has actual knowledge or reason to know of facts that are contrary to the presumptions set forth in this paragraph (b)(3). See paragraph (b)(2)(vii) of this section for rules regarding the extent which a withholding agent can reliably associate a payment with documentation.

(ii) *Presumptions of classification as individual, corporation, partnership, etc.* (A) *In general.* A withholding agent that cannot reliably associate a payment with a valid withholding certificate or that has received valid documentary evidence under §§1.1441–1(e)(1)(ii)(*2*) and 1.6049–5(c)(1) or (4) but cannot determine a payee's classification from the documentary evidence must apply the rules of this paragraph (b)(3)(ii) to determine the payee's classification as an individual, trust, estate, corporation, or partnership. The fact that a payee is presumed to have a certain status under the provisions of this paragraph (b)(3)(ii) does not mean that it is excused from furnishing documentation if documentation is otherwise required to obtain a reduced rate of withholding under this section. For example, if, for purposes of this paragraph (b)(3)(ii), a payee is presumed to be a tax-exempt organization based on §1.6049–4(c)(1)(ii)(B), the withholding agent cannot rely on this presumption to reduce the rate of withholding on payments to such person (if such person is also presumed to be a foreign person under paragraph (b)(3)(iii)(A) of this section) because a reduction in the rate of withholding for payments to a foreign tax-exempt organization generally requires that a valid Form W–8 described in §1.1441–9(b)(2) be furnished to the withholding agent.

(B) *No documentation provided.* If the withholding agent cannot reliably associate a payment with a valid withholding certificate or valid documentary evidence, it must presume that

the payee is an individual, a trust, or an estate, if the payee appears to be such person (e.g., based on the payee's name or other indications). In the absence of reliable indications that the payee is an individual, trust, or an estate, the withholding agent must presume that the payee is a corporation or one of the persons enumerated under §1.6049–4(c)(1)(ii)(B) through (Q) if it can be so treated under §1.6049–4(c)(1)(ii)(A)(*1*) or any one of the paragraphs under §1.6049–4(c)(1)(ii)(B) through (Q) without the need to furnish documentation. If the withholding agent cannot treat a payee as a person described in §1.6049–4(c)(1)(ii)(A)(*1*) through (Q), then the payee shall be presumed to be a partnership. If such a partnership is presumed to be foreign, it is not the beneficial owner of the income paid to it. See paragraph (c)(6) of this section. If such a partnership is presumed to be domestic, it is a U.S. non-exempt recipient for purposes of chapter 61 of the Internal Revenue Code.

(C) *Documentary evidence furnished for offshore account.* If the withholding agent receives valid documentary evidence, as described in §1.6049–5(c)(1) or (4), with respect to an offshore account from an entity but the documentary evidence does not establish the entity's classification as a corporation, trust, estate, or partnership, the withholding agent may presume (in the absence of actual knowledge otherwise) that the entity is the type of person enumerated under §1.6049–4 (c)(1)(ii)(B) through (Q) if it can be so treated under any one of those paragraphs without the need to furnish documentation. If the withholding agent cannot treat a payee as a person described in §1.6049–4(c)(1)(ii)(B) through (Q), then the payee shall be presumed to be a corporation unless the withholding agent knows, or has reason to know, that the entity is not classified as a corporation for U.S. tax purposes. If a payee is, or is presumed to be, a corporation under this paragraph (b)(3)(ii)(C) and a foreign person under paragraph (b)(3)(iii) of this section, a withholding agent shall not treat the payee as the beneficial owner of income if the withholding agent knows, or has reason to know, that the payee is not the beneficial owner of the income. For this purpose, a withholding agent shall have reason to know that the payee is not a beneficial owner if the documentary evidence indicates that the payee is a bank, broker, intermediary, custodian, or other agent, or is treated under §1.6049–4(c)(1)(ii)(B) through (Q) as such a person. A withholding agent may, however, treat such a person as a beneficial owner if the foreign person provides a statement, in writing and signed by a person with authority to sign the statement, that is attached to the documentary evidence stating it is the beneficial owner of the income.

(iii) *Presumption of U.S. or foreign status.* A payment that the withholding agent cannot reliably associate with documentation is presumed to be made to a U.S. person, except as otherwise provided in this paragraph (b)(3)(iii), in paragraphs (b)(3) (iv) and (v) of this section, or in §1.1441–5 (d) or (e).

(A) *Payments to exempt recipients.* If a withholding agent cannot reliably associate a payment with documentation from the payee and the payee is an exempt recipient (as determined under the provisions of §1.6049–4(c)(1)(ii) in the case of interest, or under similar provisions under chapter 61 of the Code applicable to the type of payment involved, but not including a payee that the withholding agent may treat as a foreign intermediary in accordance with paragraph (b)(3)(v) of this section), the payee is presumed to be a foreign person and not a U.S. person—

(*1*) If the withholding agent has actual knowledge of the payee's employer identification number and that number begins with the two digits ''98'';

(*2*) If the withholding agent's communications with the payee are mailed to an address in a foreign country;

(*3*) If the name of the payee indicates that the entity is the type of entity that is on the per se list of foreign corporations contained in §301.7701–2(b)(8)(i) of this chapter; or

(*4*) If the payment is made outside the United States (as defined in §1.6049–5(e)).

(B) *Scholarships and grants.* A payment representing taxable scholarship or fellowship grant income that does not represent compensation for services (but is not excluded from tax

under section 117) and that a withholding agent cannot reliably associate with documentation is presumed to be made to a foreign person if the withholding agent has a record that the payee has a U.S. visa that is not an immigrant visa. See section 871(c) and § 1.1441–4(c) for applicable tax rate and withholding rules.

(C) *Pensions, annuities, etc.* A payment from a trust described in section 401(a), an annuity plan described in section 403(a), a payment with respect to any annuity, custodial account, or retirement income account described in section 403(b), or a payment from an individual retirement account or individual retirement annuity described in section 408 that a withholding agent cannot reliably associate with documentation is presumed to be made to a U.S. person only if the withholding agent has a record of a Social Security number for the payee and relies on a mailing address described in the following sentence. A mailing address is an address used for purposes of information reporting or otherwise communicating with the payee that is an address in the United States or in a foreign country with which the United States has an income tax treaty in effect and the treaty provides that the payee, if an individual resident in that country, would be entitled to an exemption from U.S. tax on amounts described in this paragraph (b)(3)(iii)(C). Any payment described in this paragraph (b)(3)(iii)(C) that is not presumed to be made to a U.S. person is presumed to be made to a foreign person. A withholding agent making a payment to a person presumed to be a foreign person may not reduce the 30-percent amount of withholding required on such payment unless it receives a withholding certificate described in paragraph (e)(2)(i) of this section furnished by the beneficial owner. For reduction in the 30-percent rate, see §§ 1.1441–4(e) or 1.1441–6(b).

(D) *Certain payments to offshore accounts.* A payment is presumed made to a foreign payee if the payment is made outside the United States (as defined in § 1.6049–5(e)) to an offshore account (as defined in § 1.6049–5(c)(1)) and the withholding agent does not have actual knowledge that the payee is a U.S. person. See § 1.6049–5(d)(2) and (3) for exceptions to this rule.

(iv) *Grace period.* A withholding agent may choose to apply the provisions of § 1.6049–5(d)(2)(ii) regarding a 90-day grace period for purposes of this paragraph (b)(3) (by applying the term *withholding agent* instead of the term *payor*) to amounts described in § 1.1441–6(c)(2) and to amounts covered by a Form 8233 described in § 1.1441–4(b)(2)(ii). Thus, for these amounts, a withholding agent may choose to treat an account holder as a foreign person and withhold under chapter 3 of the Internal Revenue Code (and the regulations thereunder) while awaiting documentation. For purposes of determining the rate of withholding under this section, the withholding agent must withhold at the unreduced 30-percent rate at the time that the amounts are credited to an account. However, a withholding agent who can reliably associate the payment with a withholding certificate that is otherwise valid within the meaning of the applicable provisions except for the fact that it is transmitted by facsimile may rely on that facsimile form for purposes of withholding at the claimed reduced rate. For reporting of amounts credited both before and after the grace period, see § 1.1461–1(c)(4)(i)(A). The following adjustments shall be made at the expiration of the grace period:

(A) If, at the end of the grace period, the documentation is not furnished in the manner required under this section and the account holder is presumed to be a U.S. non-exempt recipient, then backup withholding applies to amounts credited to the account after the expiration of the grace period only. Amounts credited to the account during the grace period shall be treated as owned by a foreign payee and adjustments must be made to correct any underwithholding on such amounts in the manner described in § 1.1461–2.

(B) If, at the end of the grace period, the documentation is not furnished in the manner required under this section, or if documentation is furnished that does not support the claimed rate reduction, and the account holder is presumed to be a foreign person then adjustments must be made to correct any underwithholding on amounts credited to the account during the

grace period, based on the adjustment procedures described in § 1.1461–2.

(v) *Special rules applicable to payments to foreign intermediaries*—(A) *Reliance on claim of status as foreign intermediary.* The presumption rules of paragraph (b)(3)(v)(B) of this section apply to a payment made to an intermediary (whether the intermediary is a qualified or nonqualified intermediary) that has provided a valid withholding certificate under paragraph (e)(3)(ii) or (iii) of this section (or has provided documentary evidence described in paragraph (b)(3)(ii)(C) of this section that indicates it is a bank, broker, custodian, intermediary, or other agent) to the extent the withholding agent cannot treat the payment as being reliably associated with valid documentation under the rules of paragraph (b)(2)(vii) of this section. For this purpose, a U.S. person's foreign branch that is a qualified intermediary defined in paragraph (e)(5)(ii) of this section shall be treated as a foreign intermediary. A payee that the withholding agent may not reliably treat as a foreign intermediary under this paragraph (b)(3)(v)(A) is presumed to be a payee other than an intermediary whose classification as an individual, corporation, partnership, etc., must be determined in accordance with paragraph (b)(3)(ii) of this section to the extent relevant. In addition, such payee is presumed to be a U.S. or a foreign payee based upon the presumptions described in paragraph (b)(3)(iii) of this section. The provisions of paragraph (b)(3)(v)(B) of this section are not relevant to a withholding agent that can reliably associate a payment with a withholding certificate from a person representing to be a qualified intermediary to the extent the qualified intermediary has assumed primary withholding responsibility in accordance with paragraph (e)(5)(iv) of this section.

(B) *Beneficial owner documentation or allocation information is lacking or unreliable.* Any portion of a payment that the withholding agent may treat as made to a foreign intermediary (whether a nonqualified or a qualified intermediary) but that the withholding agent cannot treat as reliably associated with valid documentation under the rules of paragraph (b)(2)(vii) of this section is presumed made to an unknown, undocumented foreign payee. As a result, a withholding agent must deduct and withhold 30 percent from any payment of an amount subject to withholding. If a withholding certificate attached to an intermediary certificate is another intermediary withholding certificate or a flow-through withholding certificate, the rules of this paragraph (b)(3)(v)(B) (or § 1.1441–5(d)(3) or (e)(6)(iii)) apply by treating the share of the payment allocable to the other intermediary or flow-through entity as if it were made directly to the other intermediary or flow-through entity. Any payment of an amount subject to withholding that is presumed made to an undocumented foreign person must be reported on Form 1042–S. See § 1.1461–1(c). See § 1.6049–5(d) for payments that are not subject to withholding.

(vi) *U.S. branches.* The rules of paragraph (b)(3)(v)(B) of this section shall apply to payments to a U.S. branch described in paragraph (b)(2)(iv)(A) of this section that has provided a withholding certificate as described in paragraph (e)(3)(v) of this section on which it has not agreed to be treated as a U.S. person.

(vii) *Joint payees*—(A) *In general.* Except as provided in paragraph (b)(3)(vii)(B) of this section, if a withholding agent makes a payment to joint payees and cannot reliably associate a payment with valid documentation from all payees, the payment is presumed made to an unidentified U.S. person. However, if one of the joint payees provides a Form W–9 furnished in accordance with the procedures described in §§ 31.3406(d)–1 through 31.3406(d)–5 of this chapter, the payment shall be treated as made to that payee. See § 31.3406(h)–2 of this chapter for rules to determine the relevant payee if more than one Form W–9 is provided. For purposes of applying this paragraph (b)(3), the grace period rules in paragraph (b)(3)(iv) of this section shall apply only if each payee meets the conditions described in paragraph (b)(3)(iv) of this section.

(B) *Special rule for offshore accounts.* If a withholding agent makes a payment

to joint payees and cannot reliably associate a payment with valid documentation from all payees, the payment is presumed made to an unknown foreign payee if the payment is made outside the United States (as defined in § 1.6049–5(e)) to an offshore account (as defined in § 1.6049–5(c)(1)).

(viii) *Rebuttal of presumptions.* A payee or beneficial owner may rebut the presumptions described in this paragraph (b)(3) by providing reliable documentation to the withholding agent or, if applicable, to the IRS.

(ix) *Effect of reliance on presumptions and of actual knowledge or reason to know otherwise*—(A) *General rule.* Except as otherwise provided in paragraph (b)(3)(ix)(B) of this section, a withholding agent that withholds on a payment under section 3402, 3405 or 3406 in accordance with the presumptions set forth in this paragraph (b)(3) shall not be liable for withholding under this section even it is later established that the beneficial owner of the payment is, in fact, a foreign person. Similarly, a withholding agent that withholds on a payment under this section in accordance with the presumptions set forth in this paragraph (b)(3) shall not be liable for withholding under section 3402 or 3405 or for backup withholding under section 3406 even if it is later established that the payee or beneficial owner is, in fact, a U.S. person. A withholding agent that, instead of relying on the presumptions described in this paragraph (b)(3), relies on its own actual knowledge to withhold a lesser amount, not withhold, or not report a payment, even though reporting of the payment or withholding a greater amount would be required if the withholding agent relied on the presumptions described in this paragraph (b)(3) shall be liable for tax, interest, and penalties to the extent provided under section 1461 and the regulations under that section. See paragraph (b)(7) of this section for provisions regarding such liability if the withholding agent fails to withhold in accordance with the presumptions described in this paragraph (b)(3).

(B) *Actual knowledge or reason to know that amount of withholding is greater than is required under the presumptions or that reporting of the payment is required.* Notwithstanding the provisions of paragraph (b)(3)(ix)(A) of this section, a withholding agent may not rely on the presumptions described in this paragraph (b)(3) to the extent it has actual knowledge or reason to know that the status or characteristics of the payee or of the beneficial owner are other than what is presumed under this paragraph (b)(3) and, if based on such knowledge or reason to know, it should withhold (under this section or another withholding provision of the Code) an amount greater than would be the case if it relied on the presumptions described in this paragraph (b)(3) or it should report (under this section or under another provision of the Code) an amount that would not otherwise be reportable if it relied on the presumptions described in this paragraph (b)(3). In such a case, the withholding agent must rely on its actual knowledge or reason to know rather than on the presumptions set forth in this paragraph (b)(3). Failure to do so and, as a result, failure to withhold the higher amount or to report the payment, shall result in liability for tax, interest, and penalties to the extent provided under sections 1461 and 1463 and the regulations under those sections.

(x) *Examples.* The provisions of this paragraph (b)(3) are illustrated by the following examples:

Example 1. A withholding agent, W, makes a payment of U.S. source dividends to person X, Inc. at an address outside the United States. W cannot reliably associate the payment to X with documentation. Under §§ 1.6042–3(b)(1)(vii) and 1.6049–4(c)(1)(ii)(A)(*1*), W may treat X as a corporation. Thus, under the presumptions described in paragraph (b)(3)(iii) of this section, W must presume that X is a foreign person (because the payment is made outside the United States). However, W knows that X is a U.S. person who is an exempt recipient. W may not rely on its actual knowledge to not withhold under this section. If W's knowledge is, in fact, incorrect, W would be liable for tax, interest, and, if applicable, penalties, under section 1461. W would be permitted to reduce or eliminate its liability for the tax by establishing, in accordance with paragraph (b)(7) of this section, that the tax is not due or has been satisfied. If W's actual knowledge is, in fact, correct, W may nevertheless be liable for tax, interest, or penalties under section 1461 for the amount that W should have withheld based upon the presumptions. W would be permitted to reduce or eliminate

its liability for the tax by establishing, in accordance with paragraph (b)(7) of this section, that its actual knowledge was, in fact, correct and that no tax or a lesser amount of tax was due.

Example 2. A withholding agent, W, makes a payment of U.S. source dividends to Y who does not qualify as an exempt recipient under §§1.6042–3(b)(1)(vii) and 1.6049–4(c)(1)(ii). W cannot reliably associate the payment to Y with documentation. Under the presumptions described in paragraph (b)(3)(iii) of this section, W must presume that Y is a U.S. person who is not an exempt recipient for purposes of section 6042. However, W knows that Y is a foreign person. W may not rely on its actual knowledge to withhold under this section rather than backup withhold under section 3406. If W's knowledge is, in fact, incorrect, W would be liable for tax, interest, and, if applicable, penalties, under section 3403. If W's actual knowledge is, in fact, correct, W may nevertheless be liable for tax, interest, or penalties under section 3403 for the amount that W should have withheld based upon the presumptions. Paragraph (b)(7) of this section does not apply to provide relief from liability under section 3403.

Example 3. A withholding agent, W, makes a payment of U.S. source dividends to X, Inc. W cannot reliably associate the payment to X, Inc. with documentation. X, Inc. presents none of the indicia of foreign status described in paragraph (b)(3)(iii)(A) of this section, but W has actual knowledge that X, Inc. is a foreign corporation. W may treat X, Inc. as an exempt recipient under §1.6042–3(b)(1)(vii). Because there are no indicia of foreign status, W would, absent actual knowledge or reason to know otherwise, be permitted to treat X, Inc. as a domestic corporation in accordance with the presumptions of paragraph (b)(3)(iii) of this section. However, under paragraph (b)(3)(ix)(B) of this section, W may not rely on the presumption of U.S. status since reliance on its actual knowledge requires that it withhold an amount greater than would be the case under the presumptions.

Example 4. A withholding agent, W, is a plan administrator who makes pension payments to person X with a mailing address in a foreign country with which the United States has an income tax treaty in effect. Under that treaty, the type of pension income paid to X is taxable solely in the country of residence. The plan administrator has a record of X's U.S. social security number. W has no actual knowledge or reason to know that X is a foreign person. W may rely on the presumption of paragraph (b)(3)(iii)(C) of this section in order to treat X as a U.S. person. Therefore, any withholding and reporting requirements for the payment are governed by the provisions of section 3405 and the regulations under that section.

(4) *List of exemptions from, or reduced rates of, withholding under chapter 3 of the Code.* A withholding agent that has determined that the payee is a foreign person for purposes of paragraph (b)(1) of this section must determine whether the payee is entitled to a reduced rate of withholding under section 1441, 1442, or 1443. This paragraph (b)(4) identifies items for which a reduction in the rate of withholding may apply and whether the rate reduction is conditioned upon documentation being furnished to the withholding agent. Documentation required under this paragraph (b)(4) is documentation that a withholding agent must be able to associate with a payment upon which it can rely to treat the payment as made to a foreign person that is the beneficial owner of the payment in accordance with paragraph (e)(1)(ii) of this section. This paragraph (b)(4) also cross-references other sections of the Code and applicable regulations in which some of these exceptions, exemptions, or reductions are further explained. See, for example, paragraph (b)(4)(viii) of this section, dealing with effectively connected income, that cross-references §1.1441–4(a); see paragraph (b)(4)(xv) of this section, dealing with exemptions from, or reductions of, withholding under an income tax treaty, that cross-references §1.1441–6. This paragraph (b)(4) is not an exclusive list of items to which a reduction of the rate of withholding may apply and, thus, does not preclude an exemption from, or reduction in, the rate of withholding that may otherwise be allowed under the regulations under the provisions of chapter 3 of the Code for a particular item of income identified in this paragraph (b)(4).

(i) Portfolio interest described in section 871(h) or 881(c) and substitute interest payments described in §1.871–7(b)(2) or 1.881–2(b)(2) are exempt from withholding under section 1441(a). See §1.871–14 for regulations regarding portfolio interest and section 1441(c)(9) for exemption from withholding. Documentation establishing foreign status is required for interest on an obligation in registered form to qualify as portfolio interest. See section 871(h)(2)(B)(ii) and §1.871–14(c)(1)(ii)(C).

For special documentation rules regarding foreign-targeted registered obligations described in §1.871–14(e)(2), see §1.871–14(e) (3) and (4) and, in particular, §1.871–14(e)(4)(i)(A) and (ii)(A) regarding the time when the withholding agent must receive the documentation. The documentation furnished for purposes of qualifying interest as portfolio interest serves as the basis for the withholding exemption for purposes of this section and for purposes of establishing foreign status for purposes of section 6049. See §1.6049–5(b)(8). Documentation establishing foreign status is not required for qualifying interest on an obligation in bearer form described in §1.871–14(b)(1) as portfolio interest. However, in certain cases, documentation for portfolio interest on a bearer obligation may have to be furnished in order to establish foreign status for purposes of the information reporting provisions of section 6049 and backup withholding under section 3406. See §1.6049–5(b)(7).

(ii) Bank deposit interest and similar types of deposit interest (including original issue discount) described in section 871(i)(2)(A) or 881(d) that are from sources within the United States are exempt from withholding under section 1441(a). See section 1441(c)(10). Documentation establishing foreign status is not required for purposes of this withholding exemption but may have to be furnished for purposes of the information reporting provisions of section 6049 and backup withholding under section 3406. See §1.6049–5(d)(3)(iii) for exceptions to the foreign payee and exempt recipient rules regarding this type of income. See also §1.6049–5(b)(11) for applicable documentation exemptions for certain bank deposit interest paid on obligations in bearer form.

(iii) Bank deposit interest (including original issue discount) described in section 861(a)(1)(B) is exempt from withholding under sections 1441(a) as income that is not from U.S. sources. Documentation establishing foreign status is not required for purposes of this withholding exemption but may have to be furnished for purposes of the information reporting provisions of section 6049 and backup withholding under section 3406. Reporting requirements for payments of such interest are governed by section 6049 and the regulations under that section. See §1.6049–5(b)(12) and alternative documentation rules under §1.6049–5(c)(1).

(iv) Interest or original issue discount from sources within the United States on certain short-term obligations described in section 871(g)(1)(B) or 881(a)(3) is exempt from withholding under sections 1441(a). Documentation establishing foreign status is not required for purposes of this withholding exemption but may have to be furnished for purposes of the information reporting provisions of section 6049 and backup withholding under section 3406. See §1.6049–5(b)(12) for applicable documentation for establishing foreign status and §1.6049–5(d)(3)(iii) for exceptions to the foreign payee and exempt recipient rules regarding this type of income. See also §1.6049–5(b)(10) for applicable documentation exemptions for certain obligations in bearer form.

(v) Income from sources without the United States is exempt from withholding under sections 1441(a). Documentation establishing foreign status is not required for purposes of this withholding exemption but may have to be furnished for purposes of the information reporting provisions of section 6049 or other applicable provisions of chapter 61 of the Code and backup withholding under section 3406. See, for example, §1.6049–5(b) (6) and (12) and alternative documentation rules under §1.6049–5(c). See also paragraph (b)(5) of this section for cross references to other applicable provisions of the regulations under chapter 61 of the Code.

(vi) Distributions from certain domestic corporations described in section 871(i)(2)(B) or 881(d) are exempt from withholding under section 1441(a). See section 1441(c)(10). Documentation establishing foreign status is not required for purposes of this withholding exemption but may have to be furnished for purposes of the information reporting provisions of section 6042 and backup withholding under section 3406. See §1.6042–3(b)(1) (iii) through (vi).

(vii) Dividends paid by certain foreign corporations that are treated as income from sources within the United States by reason of section 861(a)(2)(B) are exempt from withholding under

section 884(e)(3) to the extent that the distributions are paid out of earnings and profits in any taxable year that the corporation was subject to branch profits tax for that year. Documentation establishing foreign status is not required for purposes of this withholding exemption but may have to be furnished for purposes of the information reporting provisions of section 6042 and backup withholding under section 3406. See §1.6042–3(b)(1) (iii) through (vii).

(viii) Certain income that is effectively connected with the conduct of a U.S. trade or business is exempt from withholding under section 1441(a). See section 1441(c)(1). Documentation establishing foreign status and status of the income as effectively connected must be furnished for purposes of this withholding exemption to the extent required under the provisions of §1.1441–4(a). Documentation furnished for this purpose also serves as documentation establishing foreign status for purposes of applicable information reporting provisions under chapter 61 of the Code and for backup withholding under section 3406. See, for example, §1.6041–4(a)(1).

(ix) Certain income with respect to compensation for personal services of an individual that are performed in the United States is exempt from withholding under section 1441(a). See section 1441(c)(4) and §1.1441–4(b). However, such income may be subject to withholding as wages under section 3402. Documentation establishing foreign status must be furnished for purposes of any withholding exemption or reduction to the extent required under §1.1441–4(b) or 31.3401(a)(6)–1 (e) and (f) of this chapter. Documentation furnished for this purpose also serves as documentation establishing foreign status for purposes of information reporting under section 6041. See §1.6041–4(a)(1).

(x) Amounts described in section 871(f) that are received as annuities from certain qualified plans are exempt from withholding under section 1441(a). See section 1441(c)(7). Documentation establishing foreign status must be furnished for purposes of the withholding exemption as required under §1.1441–4(d). Documentation furnished for this purpose also serves as documentation establishing foreign status for purposes of information reporting under section 6041. See §1.6041–4(a)(1).

(xi) Payments to a foreign government (including a foreign central bank of issue) that are excludable from gross income under section 892(a) are exempt from withholding under section 1442. See §1.1441–8(b). Documentation establishing status as a foreign government is required for purposes of this withholding exemption. Payments to a foreign government are exempt from information reporting under chapter 61 of the Code (see §1.6049–4(c)(1)(ii)(F)).

(xii) Payments of certain interest income to a foreign central bank of issue or the Bank for International Settlements that are exempt from tax under section 895 are exempt from withholding under section 1442. Documentation establishing eligibility for such exemption is required to the extent provided in §1.1441–8(c)(1). Payments to a foreign central bank of issue or to the Bank for International Settlements are exempt from information reporting under chapter 61 of the Code (see §1.6049–4(c)(1)(ii) (H) and (M)).

(xiii) Amounts derived by a foreign central bank of issue from bankers' acceptances described in section 871(i)(2)(C) or 881(d) are exempt from tax and, therefore, from withholding. See section 1441(c)(10). Documentation establishing foreign status is not required for purposes of this withholding exemption if the name of the payee and other facts surrounding the payment reasonably indicate that the beneficial owner of the payment is a foreign central bank of issue as defined in §1.861–2(b)(4). See §1.1441–8(c)(2) for withholding procedures. See also §§1.6049–4(c)(1)(ii)(H) and 1.6041–3(q)(8) for a similar exemption from information reporting.

(xiv) Payments to an international organization from investments in the United States of stocks, bonds, or other domestic securities or from interest on deposits in banks in the United States of funds belonging to such international organization are exempt from tax under section 892(b) and, thus, from withholding. Documentation establishing status as an international organization is not required if

the name of the payee and other facts surrounding the payment reasonably indicate that the beneficial owner of the payment is an international organization within the meaning of section 7701(a)(18). See § 1.1441–8(d). Payments to an international organization are exempt from information reporting under chapter 61 of the Code (see § 1.6049–4(c)(1)(ii)(G)).

(xv) Amounts may be exempt from, or subject to a reduced rate of, withholding under an income tax treaty. Documentation establishing eligibility for benefits under an income tax treaty is required for this purpose as provided under §§ 1.1441–6. Documentation furnished for this purpose also serves as documentation establishing foreign status for purposes of applicable information reporting provisions under chapter 61 of the Code and for backup withholding under section 3406. See, for example, § 1.6041–4(a)(1).

(xvi) Amounts of scholarships and grants paid to certain exchange or training program participants that do not represent compensation for services but are not excluded from tax under section 117 are subject to a reduced rate of withholding of 14-percent under section 1441(b). Documentation establishing foreign status is required for purposes of this reduction in rate as provided under § 1.1441–4(c). This income is not subject to information reporting under chapter 61 of the Code nor to backup withholding under section 3406. The compensatory portion of a scholarship or grant is reportable as wage income. See § 1.6041–3(o).

(xvii) Amounts paid to a foreign organization described in section 501(c) are exempt from withholding under section 1441 to the extent that the amounts are not income includible under section 512 in computing the organization's unrelated business taxable income and are not subject to the tax imposed by section 4948(a). Documentation establishing status as a tax-exempt organization is required for purposes of this exemption to the extent provided in § 1.1441–9. Amounts includible under section 512 in computing the organization's unrelated business taxable income are subject to withholding to the extent provided in section 1443(a) and § 1.1443–1(a). Gross investment income (as defined in section 4940(c)(2)) of a private foundation is subject to withholding at a 4-percent rate to the extent provided in section 1443(b) and § 1.1443–1(b). Payments to a tax-exempt organization are exempt from information reporting under chapter 61 of the Code and the regulations thereunder (see § 1.6049–4(c)(1)(ii)(B)(1)).

(xviii) Per diem amounts for subsistence paid by the U.S. government to a nonresident alien individual who is engaged in any program of training in the United States under the Mutual Security Act of 1954 are exempt from withholding under section 1441(a). See section 1441(c)(6). Documentation of foreign status is not required under § 1.1441–4(e) for purposes of establishing eligibility for this exemption. See § 1.6041–3(p).

(xix) Interest with respect to tax-free covenant bonds issued prior to 1934 is subject to special withholding procedures set forth in § 1.1461–1 in effect prior to January 1, 2001 (see § 1.1461–1 as contained in 26 CFR part 1, revised April 1, 1999).

(xx) Income from certain gambling winnings of a nonresident alien individual is exempt from tax under section 871(j) and from withholding under section 1441(a). See section 1441(c)(11). Documentation establishing foreign status is not required for purposes of this exemption but may have to be furnished for purposes of the information reporting provisions of section 6041 and backup withholding under section 3406. See §§ 1.6041–1 and 1.6041–4(a)(1).

(xxi) Any payments not otherwise mentioned in this paragraph (b)(4) shall be subject to withholding at the rate of 30-percent if it is an amount subject to withholding (as defined in § 1.1441–2(a)) unless and to the extent the IRS may otherwise prescribe in published guidance (see § 601.601(d)(2) of this chapter) or unless otherwise provided in regulations under chapter 3 of the Code.

(5) *Establishing foreign status under applicable provisions of chapter 61 of the Code.* This paragraph (b)(5) identifies relevant provisions of the regulations under chapter 61 of the Code that exempt payments from information reporting, and therefore, from backup withholding under section 3406, based

on the payee's status as a foreign person. Many of these exemptions require that the payee's foreign status be established in order for the exemption to apply. The regulations under applicable provisions of chapter 61 of the Code generally provide that the documentation described in this section may be relied upon for purposes of determining foreign status.

(i) Payments to a foreign person that are governed by section 6041 (dealing with certain trade or business income) are exempt from information reporting under § 1.6041–4(a).

(ii) Payments to a foreign person that are governed by section 6041A (dealing with remuneration for services and certain sales) are exempt from information reporting under § 1.6041A–1(d)(3).

(iii) Payments to a foreign person that are governed by section 6042 (dealing with dividends) are exempt from information reporting under § 1.6042–3(b)(1) (iii) through (vi).

(iv) Payments to a foreign person that are governed by section 6044 (dealing with patronage dividends) are exempt from information reporting under § 1.6044–3(c)(1).

(v) Payments to a foreign person that are governed by section 6045 (dealing with broker proceeds) are exempt from information reporting under § 1.6045–1(g).

(vi) Payments to a foreign person that are governed by section 6049 (dealing with interest) to a foreign person are exempt from information reporting under § 1.6049–5(b) (6) through (15).

(vii) Payments to a foreign person that are governed by section 6050N (dealing with royalties) are exempt from information reporting under § 1.6050N–1(c).

(viii) Payments to a foreign person that are governed by section 6050P (dealing with income from cancellation of debt) are exempt from information reporting under section 6050P or the regulations under that section except to the extent provided in Notice 96–61 (1996–2 C.B. 227); see also § 601.601(b)(2) of this chapter.

(6) *Rules of withholding for payments by a foreign intermediary or certain U.S. branches*—(i) *In general.* A foreign intermediary described in paragraph (e)(3)(i) of this section or a U.S. branch described in paragraph (b)(2)(iv) of this section that receives an amount subject to withholding (as defined in § 1.1441–2(a)) shall be required to withhold (if another withholding agent has not withheld the full amount required) and report such payment under chapter 3 of the Internal Revenue Code and the regulations thereunder except as otherwise provided in this paragraph (b)(6). A nonqualified intermediary or U.S. branch described in paragraph (b)(2)(iv) of this section (other than a branch that is treated as a U.S. person) shall not be required to withhold or report if it has provided a valid nonqualified intermediary withholding certificate or a U.S. branch withholding certificate, it has provided all of the information required by paragraph (e)(3)(iv) of this section (withholding statement), and it does not know, and has no reason to know, that another withholding agent failed to withhold the correct amount or failed to report the payment correctly under § 1.1461–1(c). A qualified intermediary's obligations to withhold and report shall be determined in accordance with its qualified intermediary withholding agreement.

(ii) *Examples.* The following examples illustrate the rules of paragraph (b)(6)(i) of this section:

Example 1. FB, a foreign bank, acts as intermediary for five different persons, A, B, C, D, and E, each of whom owns U.S. securities that generate U.S. source dividends. The dividends are paid by USWA, a U.S. withholding agent. FB furnished USWA with a nonqualified intermediary withholding certificate, described in paragraph (e)(3)(iii) of this section, to which it attached the withholding certificates of each of A, B, C, D, and E. The withholding certificates from A and B claim a 15 percent reduced rate of withholding under an income tax treaty. C, D, and E claim no reduced rate of withholding. FB provides a withholding statement that meets all of the requirements of paragraph (e)(3)(iv) of this section, including information allocating 20 percent of each dividend payment to each of A, B, C, D, and E. FB does not have actual knowledge or reason to know that USWA did not withhold the correct amounts or report the dividends on Forms 1042–S to each of A, B, C, D, and E. FB is not required to withhold or to report the dividends to A, B, C, D, and E.

Example 2. The facts are the same as in *Example 1,* except that FB did not provide any information for USWA to determine how

reliably associate the dividend payments with documentation under paragraph (b)(2)(vii) of this section, USWA applied the presumption rules of paragraph (b)(3)(v) of this section and withheld 30 percent from all dividend payments. In addition, USWA filed a single Form 1042–S reporting the payment to an unknown foreign payee. FB is deemed to know that USWA did not report the payment to A, B, C, D, and E because it did not provide all of the information required on a withholding statement under paragraph (e)(3)(iv) of this section (*i.e.*, allocation information). Although FB is not required to withhold on the payment because the full 30 percent withholding was imposed by USWA, it is required to report the payments on Forms 1042–S to A, B, C, D, and E. FB's intentional failure to do so will subject it to intentional disregard penalties under sections 6721 and 6722.

(7) *Liability for failure to obtain documentation timely or to act in accordance with applicable presumptions*—(i) *General rule.* A withholding agent that cannot reliably associate a payment with documentation on the date of payment and that does not withhold under this section, or withholds at less than the 30-percent rate prescribed under section 1441(a) and paragraph (b)(1) of this section, is liable under section 1461 for the tax required to be withheld under chapter 3 of the Code and the regulations thereunder, without the benefit of a reduced rate unless—

(A) The withholding agent has appropriately relied on the presumptions described in paragraph (b)(3) of this section (including the grace period described in paragraph (b)(3)(iv) of this section) in order to treat the payee as a U.S. person or, if applicable, on the presumptions described in §1.1441–4(a)(2)(ii) or (3)(i) to treat the payment as effectively connected income; or

(B) The withholding agent can demonstrate to the satisfaction of the district director or the Assistant Commissioner (International) that the proper amount of tax, if any, was in fact paid to the IRS; or

(C) No documentation is required under section 1441 or this section in order for a reduced rate of withholding to apply.

(ii) *Proof that tax liability has been satisfied.* Proof of payment of tax may be established for purposes of paragraph (b)(7)(i)(B) of this section on the basis of a Form 4669 (or such other form as the IRS may prescribe in published guidance (see §601.601(d)(2) of this chapter)), establishing the amount of tax, if any, actually paid by or for the beneficial owner on the income. Proof that a reduced rate of withholding was, in fact, appropriate under the provisions of chapter 3 of the Code and the regulations thereunder may also be established after the date of payment by the withholding agent on the basis of a valid withholding certificate or other appropriate documentation furnished after that date. However, in the case of a withholding certificate or other appropriate documentation received after the date of payment (or after the grace period specified in paragraph (b)(3)(iv) of this section), the district director or the Assistant Commissioner (International) may require additional proof if it is determined that the delays in obtaining the withholding certificate affect its reliability.

(iii) *Liability for interest and penalties.* A withholding agent that has failed to withhold other than based on appropriate reliance on the presumptions described in paragraph (b)(3) of this section or in §1.1441–4(a) (2)(ii) or (3)(i) is not relieved from liability for interest under section 6601. Such liability exists even if there is no underlying tax liability due. The interest on the amount that should have been withheld shall be imposed as prescribed under section 6601 beginning on the last date for paying the tax due under section 1461 (which, under section 6601, is the due date for filing the withholding agent's return of tax). The interest shall stop accruing on the earlier of the date that the required withholding certificate or other documentation is provided to the withholding agent and to the extent of the amount of tax that is determined not to be due based on documentation provided, or the date, and to the extent, that the unpaid tax liability under section 871, 881 or under section 1461 is satisfied. Further, in the event that a tax liability is assessed against the beneficial owner under section 871, 881, or 882 and interest under section 6601(a) is assessed against, and collected from, the beneficial owner, the interest charge imposed on the withholding agent shall be abated to

withholding agent shall be abated to that extent so as to avoid the imposition of a double interest charge. However, the withholding agent is not relieved of any applicable penalties. See section 1464.

(iv) *Special effective date.* See paragraph (f)(2)(ii) of this section for the special effective date applicable to this paragraph (b)(7).

(v) *Examples.* The provisions of paragraph (b)(7) of this section are illustrated by the following examples:

Example 1. On June 15, 2001, a withholding agent pays U.S. source interest on an obligation in registered form (issued after July 18, 1984) to a foreign corporation that it cannot reliably associate with a Form W–8 or other appropriate documentation upon which to rely to treat the beneficial owner as a foreign person. The withholding agent does not withhold from the payment. On September 30, 2003, the withholding agent receives from the foreign corporation a valid Form W–8 described in paragraph (e)(2)(ii) of this section. Thus, the interest qualifies as portfolio interest retroactively to June 15, 2001 (the date of payment). See §1.871–14(c)(3). The foreign corporation does not file a U.S. federal income tax return and does not pay the tax owed. The withholding agent is not liable under section 1461 for the 30-percent tax on the interest income because the receipt of the Form W–8 exempts the interest from tax for purposes of sections 881(a) and 1461. The withholding agent, however, is liable for interest on the amount of withholding that should have been deducted from the payment on June 15, 2001 and deposited. Under paragraph (b)(7)(iii) of this section, the period during which interest may be assessed against the withholding agent runs from March 15, 2002 (the due date for the Form 1042 relating to the payment) until September 30, 2003 (i.e., the date that appropriate documentation is furnished to the withholding agent).

Example 2. On June 15, 2001, a withholding agent pays U.S. source dividends to a foreign corporation that it cannot reliably associate with a Form W–8 or other appropriate documentation upon which to rely to treat the beneficial owner as a foreign person. The withholding agent does not withhold from the payment. On September 30, 2003, the withholding agent receives from the foreign corporation a valid Form W–8 described in paragraph (e)(2)(ii) of this section claiming a reduced 15-percent rate of withholding under a U.S. income tax treaty. The dividend qualifies for the reduced treaty rate retroactively to June 15, 2001 (the date of payment). The foreign corporation does not file a U.S. federal income tax return and does not pay the tax owed. Under section 1461, the withholding agent is liable only for a 15-percent tax on the dividend income because the receipt of the Form W–8 allows the tax rate to be reduced for purposes of sections 881(a) and 1461 from 30 percent to 15 percent. The withholding agent, however, is liable for interest on the full 30-percent amount that should have been deducted and withheld from the payment on June 15, 2001, and deposited, over a period running from March 15, 2002 (the due date for the Form 1042 relating to the payment) until September 30, 2003 (the date that the appropriate documentation is furnished to the withholding agent supporting a reduction in rate under a tax treaty). Additional interest may be assessed relating to the outstanding 15-percent tax liability (i.e., the portion of the 30-percent total tax liability that is not reduced under the treaty). Such additional interest runs from March 15, 2002, until such date as that 15-percent tax liability is satisfied by the withholding agent or the taxpayer (subject to abatement in order to avoid a double interest charge).

(8) *Adjustments, refunds, or credits of overwithheld amounts.* If the amount withheld under section 1441, 1442, or 1443 is greater than the tax due by the withholding agent or the taxpayer, adjustments may be made in accordance with the procedures described in §1.1461–2(a). Alternatively, refunds or credits may be claimed in accordance with the procedures described in §1.1464–1, relating to refunds or credits claimed by the beneficial owner, or §1.6414–1, relating to refunds or credits claimed by the withholding agent. If an amount was withheld under section 3406 or is subsequently determined to have been paid to a foreign person, see paragraph (b)(3)(vii) of this section and §31.6413(a)–3(a)(1) of this chapter.

(9) *Payments to joint owners.* A payment to joint owners that requires documentation in order to reduce the rate of withholding under chapter 3 of the Code and the regulations thereunder does not qualify for such reduced rate unless the withholding agent can reliably associate the payment with documentation from each owner. Notwithstanding the preceding sentence, a payment to joint owners qualifies as a payment exempt from withholding under this section if any one of the owners provides a certificate of U.S. status on a Form W–9 in accordance with paragraph (d) (2) or (3) of this section or the withholding agent can associate the payment with an intermediary or flow–

through withholding certificate upon which it can rely to treat the payment as made to a U.S. payee under paragraph (d)(4) of this section. See § 31.3406(h)–2(a)(3)(i)(B) of this chapter.

(c) *Definitions*—(1) *Withholding*. The term *withholding* means the deduction and withholding of tax at the applicable rate from the payment.

(2) *Foreign and U.S. person*. The term *foreign person* means a nonresident alien individual, a foreign corporation, a foreign partnership, a foreign trust, a foreign estate, and any other person that is not a U.S. person described in the next sentence. Solely for purposes of the regulations under chapter 3 of the Internal Revenue Code, the term *foreign person* also means, with respect to a payment by a withholding agent, a foreign branch of a U.S. person that furnishes an intermediary withholding certificate described in paragraph (e)(3)(ii) of this section. Such a branch continues to be a U.S. payor for purposes of chapter 61 of the Internal Revenue Code. See § 1.6049–5(c)(4). A U.S. person is a person described in section 7701(a)(30), the U.S. government (including an agency or instrumentality thereof), a State (including an agency or instrumentality thereof), or the District of Columbia (including an agency or instrumentality thereof).

(3) *Individual*—(i) *Alien individual*. The term *alien individual* means an individual who is not a citizen or a national of the United States. See § 1.1–1(c).

(ii) *Nonresident alien individual*. The term *nonresident alien individual* means a person described in section 7701(b)(1)(B), an alien individual who is a resident of a foreign country under the residence article of an income tax treaty and § 301.7701(b)–7(a)(1) of this chapter, or an alien individual who is a resident of Puerto Rico, Guam, the Commonwealth of Northern Mariana Islands, the U.S. Virgin Islands, or American Samoa as determined under § 301.7701(b)–1(d) of this chapter. An alien individual who has made an election under section 6013 (g) or (h) to be treated as a resident of the United States is nevertheless treated as a nonresident alien individual for purposes of withholding under chapter 3 of the Code and the regulations thereunder.

(4) *Certain foreign corporations*. For purposes of this section, a corporation created or organized in Guam, the Commonwealth of Northern Mariana Islands, the U.S. Virgin Islands, and American Samoa, is not treated as a foreign corporation if the requirements of sections 881(b)(1) (A), (B), and (C) are met for such corporation. Further, a payment made to a foreign government or an international organization shall be treated as a payment made to a foreign corporation for purposes of withholding under chapter 3 of the Code and the regulations thereunder.

(5) *Financial institution and foreign financial institution*. For purposes of the regulations under chapter 3 of the Code, the term *financial institution* means a person described in § 1.165–12(c)(1)(iv) (not including a person providing pension or other similar benefits or a regulated investment company or other mutual fund, unless otherwise indicated) and the term *foreign financial institution* means a financial institution that is a foreign person, as defined in paragraph (c)(2) of this section.

(6) *Beneficial owner*—(i) *General rule*. This paragraph (c)(6) defines the term *beneficial owner* for payments of income other than a payment for which a reduced rate of withholding is claimed under an income tax treaty. The term *beneficial owner* means the person who is the owner of the income for tax purposes and who beneficially owns that income. A person shall be treated as the owner of the income to the extent that it is required under U.S. tax principles to include the amount paid in gross income under section 61 (determined without regard to an exclusion or exemption from gross income under the Internal Revenue Code). Beneficial ownership of income is determined under the provisions of section 7701(l) and the regulations under that section and any other applicable general U.S. tax principles, including principles governing the determination of whether a transaction is a conduit transaction. Thus, a person receiving income in a capacity as a nominee, agent, or custodian for another person is not the beneficial owner of the income. In the case of a scholarship, the student receiving the scholarship is the beneficial owner of that scholarship. In

the case of a payment of an amount that is not income, the beneficial owner determination shall be made under this paragraph (c)(6) as if the amount were income.

(ii) *Special rules*—(A) *General rule*. The beneficial owners of income paid to an entity described in this paragraph (c)(6)(ii) are those persons described in paragraphs (c)(6)(ii)(B) through (D) of this section.

(B) *Foreign partnerships*. The beneficial owners of income paid to a foreign partnership (whether a nonwithholding or a withholding foreign partnership) are the partners in the partnership, unless they themselves are not the beneficial owners of the income under this paragraph (c)(6). For example, a partnership (first tier) that is a partner in another partnership (second tier) is not the beneficial owner of income paid to the second tier partnership since the first tier partnership is not the owner of the income under U.S. tax principles. Rather, the partners of the first tier partnership are the beneficial owners (to the extent they are not themselves persons that are not beneficial owners under this paragraph (c)(6)). See §1.1441–5(b) for applicable withholding procedures for payments to a domestic partnership. See also §1.1441–5(c)(3)(ii) for applicable withholding procedures for payments to a foreign partnership where one of the partners (at any level in the chain of tiers) is a domestic partnership.

(C) *Foreign simple trusts and foreign grantor trusts*. The beneficial owners of income paid to a foreign simple trust, as described in paragraph (c)(23) of this section, are the beneficiaries of the trust, unless they themselves are not the beneficial owners of the income under this paragraph (c)(6). The beneficial owners of income paid to a foreign grantor trust, as described in paragraph (c)(26) of this section, are the persons treated as the owners of the trust, unless they themselves are not the beneficial owners of the income under this paragraph (c)(6).

(D) *Other foreign trusts and foreign estates*. The beneficial owner of income paid to a foreign complex trust as defined in paragraph (c)(25) of this section or to a foreign estate is the foreign complex trust or estate itself.

(7) *Withholding agent*. For a definition of the term *withholding agent* and applicable rules, see §1.1441–7.

(8) *Person*. For purposes of the regulations under chapter 3 of the Code, the term *person* shall mean a person described in section 7701(a)(1) and the regulations under that section and a U.S. branch to the extent treated as a U.S. person under paragraph (b)(2)(iv) of this section. For purposes of the regulations under chapter 3 of the Code, the term *person* does not include a wholly-owned entity that is disregarded for federal tax purposes under §301.7701–2(c)(2) of this chapter as an entity separate from its owner. See paragraph (b)(2)(iii) of this section for procedures applicable to payments to such entities.

(9) *Source of income*. The source of income is determined under the provisions of part I (section 861 and following) , subchapter N, chapter 1 of the Code and the regulations under those provisions.

(10) *Chapter 3 of the Code*. For purposes of the regulations under sections 1441, 1442, and 1443, any reference to chapter 3 of the Code shall not include references to sections 1445 and 1446, unless the context indicates otherwise.

(11) *Reduced rate*. For purposes of regulations under chapter 3 of the Code, and other withholding provisions of the Code, the term *reduced rate*, when used in regulations under chapter 3 of the Code, shall include an exemption from tax.

(12) *Payee*. For purposes of chapter 3 of the Internal Revenue Code, the term *payee* of a payment is determined under paragraph (b)(2) of this section, §1.1441–5(c)(1) (relating to partnerships), and §1.1441–5(e)(2) and (3) (relating to trusts and estates) and includes foreign persons, U.S. exempt recipients, and U.S. non-exempt recipients. A nonqualified intermediary and a qualified intermediary (to the extent it does not assume primary withholding responsibility) are not payees if they are acting as intermediaries and not the beneficial owner of income. In addition, a flow-through entity is not a payee unless the income is (or is deemed to be) effectively connected with the conduct of a trade or business in the United States. See §1.6049–5(d)(1) for rules to

determine the payee for purposes of chapter 61 of the Internal Revenue Code. See §§1.1441–1(b)(3), 1.1441–5(d), and (e)(6) and 1.6049–5(d)(3) for presumption rules that apply if a payee's identity cannot be determined on the basis of valid documentation.

(13) *Intermediary*. An *intermediary* means, with respect to a payment that it receives, a person that, for that payment, acts as a custodian, broker, nominee, or otherwise as an agent for another person, regardless of whether such other person is the beneficial owner of the amount paid, a flow-through entity, or another intermediary.

(14) *Nonqualified intermediary*. A *nonqualified intermediary* means any intermediary that is not a U.S. person and not a qualified intermediary, as defined in paragraph (e)(5)(ii) of this section, or a qualified intermediary that is not acting in its capacity as a qualified intermediary with respect to a payment. For example, to the extent an entity that is a qualified intermediary provides another withholding agent with a foreign beneficial owner withholding certificate as defined in paragraph (e)(2)(i) of this section, the entity is not acting in its capacity as a qualified intermediary. Notwithstanding the preceding sentence, a qualified intermediary is acting as a qualified intermediary to the extent it provides another withholding agent with Forms W–9, or other information regarding U.S. non-exempt recipients pursuant to its qualified intermediary agreement with the IRS.

(15) *Qualified intermediary*. The term *qualified intermediary* is defined in paragraph (e)(5)(ii) of this section.

(16) *Withholding certificate*. The term *withholding certificate* means a Form W–8 described in paragraph (e)(2)(i) of this section (relating to foreign beneficial owners), paragraph (e)(3)(i) of this section (relating to foreign intermediaries), §1.1441–5(c)(2)(iv), (c)(3)(iii), and (e)(3)(iv) (relating to flow-through entities), a Form 8233 described in §1.1441–4(b)(2), a Form W–9 as described in paragraph (d) of this section, a statement described in §1.871–14(c)(2)(v) (relating to portfolio interest), or any other certificates that under the Internal Revenue Code or regulations certifies or establishes the status of a payee or beneficial owner as a U.S. or a foreign person.

(17) *Documentary evidence; other appropriate documentation*. The terms *documentary evidence* or *other appropriate documentation* refer to documents other than a withholding certificate that may be provided for payments made outside the United States to offshore accounts or any other evidence that under the Internal Revenue Code or regulations certifies or establishes the status of a payee or beneficial owner as a U.S. or foreign person. See §§1.1441–6(b)(2), (c)(3) and (4) (relating to treaty benefits), and 1.6049–5(c)(1) and (4) (relating to chapter 61 reporting). Also see §1.1441–4(a)(3)(ii) regarding documentary evidence for notional principal contracts.

(18) *Documentation*. The term *documentation* refers to both withholding certificates, as defined in paragraph (c)(16) of this section, and documentary evidence or other appropriate documentation, as defined in paragraph (c)(17) of this section.

(19) *Payor*. The term *payor* is defined in §31.3406(a)–2 of this chapter and §1.6049–4(a)(2) and generally includes a withholding agent, as defined in §1.1441–7(a). The term also includes any person that makes a payment to an intermediary, flow-through entity, or U.S. branch that is not treated as a U.S. person to the extent the intermediary, flow-through, or U.S. branch provides a Form W–9 or other appropriate information relating to a payee so that the payment can be reported under chapter 61 of the Internal Revenue Code and, if required, subject to backup withholding under section 3406. This latter rule does not preclude the intermediary, flow-through entity, or U.S. branch from also being a payor.

(20) *Exempt recipient*. The term *exempt recipient* means a person that is exempt from reporting under chapter 61 of the Internal Revenue Code and backup withholding under section 3406 and that is described in §§1.6041–3(q), 1.6045–2(b)(2)(i), and 1.6049–4(c)(1)(ii), and §5f.6045–1(c)(3)(i)(B) of this chapter. Exempt recipients are not exempt from withholding under chapter 3 of the Internal Revenue Code unless they are U.S. persons or foreign persons entitled

to an exemption from withholding under chapter 3.

(21) *Non-exempt recipient*. A *non-exempt recipient* is any person that is not an exempt recipient under paragraph (c)(20) of this section.

(22) *Reportable amounts*. *Reportable amounts* are defined in paragraph (e)(3)(vi) of this section.

(23) *Flow-through entity*. A *flow-through entity* means any entity that is described in this paragraph (c)(23) and that may provide documentation on behalf of others to a withholding agent. The entities described in this paragraph are a foreign partnership (other than a withholding foreign partnership), a foreign simple trust (other than a withholding foreign trust) that is described in paragraph (c)(24) of this section, a foreign grantor trust (other than a withholding foreign trust) that is described in paragraph (c)(25) of this section, or, for any payments for which a reduced rate of withholding under an income tax treaty is claimed, any entity to the extent the entity is considered to be fiscally transparent under section 894 with respect to the payment by an interest holder's jurisdiction.

(24) *Foreign simple trust*. A *foreign simple trust* is a foreign trust that is described in section 651(a).

(25) *Foreign complex trust*. A *foreign complex trust* is a foreign trust other than a trust described in section 651(a) or sections 671 through 679.

(26) *Foreign grantor trust*. A *foreign grantor trust* is a foreign trust but only to the extent all or a portion of the income of the trust is treated as owned by the grantor or another person under sections 671 through 679.

(27) *Partnership*. The term *partnership* means any entity treated as a partnership under § 301.7701–2 or –3 of this chapter.

(28) *Nonwithholding foreign partnership*. A *nonwithholding foreign partnership* is a foreign partnership that is not a withholding foreign partnership, as defined in § 1.1441–5(c)(2)(i).

(29) *Withholding foreign partnership*. A withholding foreign partnership is defined in § 1.1441–5(c)(2)(i).

(d) *Beneficial owner's or payee's claim of U.S. status*—(1) *In general*. Under paragraph (b)(1) of this section, a withholding agent is not required to withhold under chapter 3 of the Code on payments to a U.S. payee, to a person presumed to be a U.S. payee in accordance with the provisions of paragraph (b)(3) of this section, or to a person that the withholding agent may treat as a U.S. beneficial owner of the payment. Absent actual knowledge or reason to know otherwise, a withholding agent may rely on the provisions of this paragraph (d) in order to determine whether to treat a payee or beneficial owner as a U.S. person.

(2) *Payments for which a Form W–9 is otherwise required*. A withholding agent may treat as a U.S. payee any person who is required to furnish a Form W–9 and who furnishes it in accordance with the procedures described in §§ 31.3406(d)–1 through 31.3406(d)–5 of this chapter (including the requirement that the payee furnish its taxpayer identifying number (TIN)) if the withholding agent meets all the requirements described in § 31.3406(h)–3(e) of this chapter regarding reliance by a payor on a Form W–9. Providing a Form W–9 or valid substitute form shall serve as a statement that the person whose name is on the form is a U.S. person. Therefore, a foreign person, including a U.S. branch treated as a U.S. person under paragraph (b)(2)(iv) of this section, shall not provide a Form W–9. A U.S. branch of a foreign person may establish its status as a foreign person exempt from reporting under chapter 61 and backup withholding under section 3406 by providing a withholding certificate on Form W–8.

(3) *Payments for which a Form W–9 is not otherwise required*. In the case of a payee who is not required to furnish a Form W–9 under section 3406 (e.g., a person exempt from reporting under chapter 61 of the Internal Revenue Code), the withholding agent may treat the payee as a U.S. payee if the payee provides the withholding agent with a Form W–9 or a substitute form described in § 31.3406(h)–3(c)(2) of this chapter (relating to forms for exempt recipients) that contains the payee's name, address, and TIN. The form must be signed under penalties of perjury by the payee if so required by the form or by § 31.3406(h)–3 of this chapter. Providing a Form W–9 or valid substitute form shall serve as a statement that

the person whose name is on the certificate is a U.S. person. A Form W–9 or valid substitute form shall not be provided by a foreign person, including any U.S. branch of a foreign person whether or not the branch is treated as a U.S. person under paragraph (b)(2)(iv) of this section. See paragraph (e)(3)(v) of this section for withholding certificates provided by U.S. branches described in paragraph (b)(2)(iv) of this section. The procedures described in § 31.3406(h)–2(a) of this chapter shall apply to payments to joint payees. A withholding agent that receives a Form W–9 to satisfy this paragraph (d)(3) must retain the form in accordance with the provisions of § 31.3406(h)–3(g) of this chapter, if applicable, or of paragraph (e)(4)(iii) of this section (relating to the retention of withholding certificates) if § 31.3406(h)–3(g) of this chapter does not apply. The rules of this paragraph (d)(3) are only intended to provide a method by which a withholding agent may determine that a payee is a U.S. person and do not otherwise impose a requirement that documentation be furnished by a person who is otherwise treated as an exempt recipient for purposes of the applicable information reporting provisions under chapter 61 of the Internal Revenue Code (*e.g.*, § 1.6049–4(c)(1)(ii) for payments of interest).

(4) *When a payment to an intermediary or flow-through entity may be treated as made to a U.S. payee.* A withholding agent that makes a payment to an intermediary (whether a qualified intermediary or nonqualified intermediary), a flow-through entity, or a U.S. branch described in paragraph (b)(2)(iv) of this section may treat the payment as made to a U.S. payee to the extent that, prior to the payment, the withholding agent can reliably associate the payment with a Form W–9 described in paragraph (d)(2) or (3) of this section attached to a valid intermediary, flow-through, or U.S. branch withholding certificate described in paragraph (e)(3)(i) of this section or to the extent the withholding agent can reliably associate the payment with a Form W–8 described in paragraph (e)(3)(v) of this section that evidences an agreement to treat a U.S. branch described in paragraph (b)(2)(iv) of this section as a U.S. person. In addition, a withholding agent may treat the payment as made to a U.S. payee only if it complies with the electronic confirmation procedures described in paragraph (e)(4)(v) of this section, if required, and it has not been notified by the IRS that any of the information on the withholding certificate or other documentation is incorrect or unreliable. In the case of a Form W–9 that is required to be furnished for a reportable payment that may be subject to backup withholding, the withholding agent may be notified in accordance with section 3406(a)(1)(B) and the regulations under that section. See applicable procedures under section 3406(a)(1)(B) and the regulations under that section for payors who have been notified with regard to such a Form W–9. Withholding agents who have been notified in relation to other Forms W–9, including under section 6724(b) pursuant to section 6721, may rely on the withholding certificate or other documentation only to the extent provided under procedures as prescribed by the IRS (see § 601.601(d)(2) of this chapter).

(e) *Beneficial owner's claim of foreign status*—(1) *Withholding agent's reliance*—(i) *In general.* Absent actual knowledge or reason to know otherwise, a withholding agent may treat a payment as made to a foreign beneficial owner in accordance with the provisions of paragraph (e)(1)(ii) of this section. See paragraph (e)(4)(viii) of this section for applicable reliance rules. See paragraph (b)(4) of this section for a description of payments for which a claim of foreign status is relevant for purposes of claiming a reduced rate of withholding for purposes of section 1441, 1442, or 1443. See paragraph (b)(5) of this section for a list of payments for which a claim of foreign status is relevant for other purposes, such as claiming an exemption from information reporting under chapter 61 of the Code.

(ii) *Payments that a withholding agent may treat as made to a foreign person that is a beneficial owner*—(A) *General rule.* The withholding agent may treat a payment as made to a foreign person that is a beneficial owner if it complies with the requirements described in

paragraph (e)(1)(ii)(B) of this section and, then, only to the extent—

(*1*) That the withholding agent can reliably associate the payment with a beneficial owner withholding certificate described in paragraph (e)(2) of this section furnished by the person whose name is on the certificate or attached to a valid foreign intermediary, flow-through, or U.S. branch withholding certificate;

(*2*) That the payment is made outside the United States (within the meaning of §1.6049–5(e)) to an offshore account (within the meaning of §1.6049–5(c)(1)) and the withholding agent can reliably associate the payment with documentary evidence described in §§1.1441–6(c)(3) or (4), or 1.6049–5(c)(1) relating to the beneficial owner;

(*3*) That the withholding agent can reliably associate the payment with a valid qualified intermediary withholding certificate, as described in paragraph (e)(3)(ii) of this section, and the qualified intermediary has provided sufficient information for the withholding agent to allocate the payment to a withholding rate pool other than a withholding rate pool or pools established for U.S. non-exempt recipients;

(*4*) That the withholding agent can reliably associate the payment with a withholding certificate described in §1.1441–5(c)(3)(iii) or (e)(5)(iii) from a flow-through entity claiming the income is effectively connected income;

(*5*) That the withholding agent identifies the payee as a U.S. branch described in paragraph (b)(2)(iv) of this section, the payment to which it treats as effectively connected income in accordance with §1.1441–4(a) (2)(ii) or (3);

(*6*) That the withholding agent identifies the payee as an international organization (or any wholly-owned agency or instrumentality thereof) as defined in section 7701(a)(18) that has been designated as such by executive order (pursuant to 22 U.S.C. 288 through 288(f)); or

(*7*) That the withholding agent pays interest from bankers' acceptances and identifies the payee as a foreign central bank of issue (as defined in §1.861–2(b)(4)).

(B) *Additional requirements*. In order for a payment described in paragraph (e)(1)(ii)(A) of this section to be treated as made to a foreign beneficial owner, the withholding agent must hold the documentation (if required) prior to the payment, comply with the electronic confirmation procedures described in paragraph (e)(4)(v) of this section (if required), and must not have been notified by the IRS that any of the information on the withholding certificate or other documentation is incorrect or unreliable. If the withholding agent has been so notified, it may rely on the withholding certificate or other documentation only to the extent provided under procedures prescribed by the IRS (see §601.601(d)(2) of this chapter). See paragraph (b)(2)(vii) of this section for rules regarding reliable association of a payment with a withholding certificate or other appropriate documentation.

(2) *Beneficial owner withholding certificate*—(i) *In general*. A beneficial owner withholding certificate is a statement by which the beneficial owner of the payment represents that it is a foreign person and, if applicable, claims a reduced rate of withholding under section 1441. A separate withholding certificate must be submitted to each withholding agent. If the beneficial owner receives more than one type of payment from a single withholding agent, the beneficial owner may have to submit more than one withholding certificate to the single withholding agent for the different types of payments as may be required by the applicable forms and instructions, or as the withholding agent may require (such as to facilitate the withholding agent's compliance with its obligations to determine withholding under this section or the reporting of the amounts under §1.1461–1 (b) and (c)). For example, if a beneficial owner claims that some but not all of the income it receives is effectively connected with the conduct of a trade or business in the United States, it may be required to submit two separate withholding certificates, one for income that is not effectively connected and one for income that is so connected. See §1.1441–6(b)(2) for special rules for determining who must furnish a beneficial owner withholding certificate when a benefit is claimed under an

income tax treaty. See paragraph (e)(4)(ix) of this section for reliance rules in the case of certificates held by another person or at a different branch location of the same person.

(ii) *Requirements for validity of certificate.* A beneficial owner withholding certificate is valid only if it is provided on a Form W–8, or a Form 8233 in the case of personal services income described in §1.1441–4(b) or certain scholarship or grant amounts described in §1.1441–4(c) (or a substitute form described in paragraph (e)(4)(vi) of this section, or such other form as the IRS may prescribe). A Form W–8 is valid only if its validity period has not expired, it is signed under penalties of perjury by the beneficial owner, and it contains all of the information required on the form. The required information is the beneficial owner's name, permanent residence address, and TIN (if required), the country under the laws of which the beneficial owner is created, incorporated, or governed (if a person other than an individual), the classification of the entity, and such other information as may be required by the regulations under section 1441 or by the form or accompanying instructions in addition to, or in lieu of, the information described in this paragraph (e)(2)(ii). A person's permanent residence address is an address in the country where the person claims to be a resident for purposes of that country's income tax. In the case of a certificate furnished in order to claim a reduced rate of withholding under an income tax treaty, the residence must be determined in the manner prescribed under the applicable treaty. See §1.1441–6(b). The address of a financial institution with which the beneficial owner maintains an account, a post office box, or an address used solely for mailing purposes is not a residence address for this purpose. If the beneficial owner is an individual who does not have a tax residence in any country, the permanent residence address is the place at which the beneficial owner normally resides. If the beneficial owner is not an individual and does not have a tax residence in any country, then the permanent residence address is the place at which the person maintains its principal office. See paragraph (e)(4)(vii) of this section for circumstances in which a TIN is required on a beneficial owner withholding certificate. See paragraph (f)(2)(i) of this section for continued validity of certificates during a transition period.

(3) *Intermediary, flow-through, or U.S. branch withholding certificate*—(i) *In general.* An intermediary withholding certificate is a Form W–8 by which a payee represents that it is a foreign person and that it is an intermediary (whether a qualified or nonqualified intermediary) with respect to a payment and not the beneficial owner. See paragraphs (e)(3)(ii) and (iii) of this section. A flow-through withholding certificate is a Form W–8 used by a flow-through entity as defined in paragraph (c)(23) of this section. See §1.1441–5(c)(3)(iii) (a nonwithholding foreign partnership), §1.1441–5(e)(5)(iii) (a foreign simple trust or foreign grantor trust) or §1.1441–6(b)(2) (foreign entity presenting claims on behalf of its interest holders for a reduced rate of withholding under an income tax treaty). A U.S. branch certificate is a Form W–8 furnished under paragraph (e)(3)(v) of this section by a U.S. branch described in paragraph (b)(2)(iv) of this section. See paragraph (e)(4)(viii) of this section for applicable reliance rules.

(ii) *Intermediary withholding certificate from a qualified intermediary.* A qualified intermediary shall provide a qualified intermediary withholding certificate for reportable amounts received by the qualified intermediary. See paragraph (e)(3)(vi) of this section for the definition of reportable amount. A qualified intermediary withholding certificate is valid only if it is furnished on a Form W–8, an acceptable substitute form, or such other form as the IRS may prescribe, it is signed under penalties of perjury by a person with authority to sign for the qualified intermediary, its validity has not expired, and it contains the following information, statement, and certifications—

(A) The name, permanent residence address (as described in paragraph (e)(2)(ii) of this section), qualified intermediary employer identification number (QI–EIN), and the country

under the laws of which the intermediary is created, incorporated, or governed. A qualified intermediary that does not act in its capacity as a qualified intermediary must not use its QI–EIN. Rather the intermediary should provide a nonqualified intermediary withholding certificate, if it is acting as an intermediary, and should use the taxpayer identification number, if any, that it uses for all other purposes;

(B) A certification that, with respect to accounts it identifies on its withholding statement (as described in paragraph (e)(5)(v) of this section), the qualified intermediary is not acting for its own account but is acting as a qualified intermediary;

(C) A certification that the qualified intermediary has provided, or will provide, a withholding statement as required by paragraph (e)(5)(v) of this section; and

(D) Any other information, certifications, or statements as may be required by the form or accompanying instructions in addition to, or in lieu of, the information and certifications described in this paragraph (e)(3)(ii) or paragraph (e)(3)(v) of this section. See paragraph (e)(5)(v) of this section for the requirements of a withholding statement associated with the qualified intermediary withholding certificate.

(iii) *Intermediary withholding certificate from a nonqualified intermediary*. A nonqualified intermediary shall provide a nonqualified intermediary withholding certificate for reportable amounts received by the nonqualified intermediary. See paragraph (e)(3)(vi) of this section for the definition of reportable amount. A nonqualified intermediary withholding certificate is valid only to the extent it is furnished on a Form W–8, an acceptable substitute form, or such other form as the IRS may prescribe, it is signed under penalties of perjury by a person authorized to sign for the nonqualified intermediary, it contains the information, statements, and certifications described in this paragraph (e)(3)(iii) and paragraph (e)(3)(iv) of this section, its validity has not expired, and the withholding certificates and other appropriate documentation for all persons to whom the certificate relates are associated with the certificate. Withholding certificates and other appropriate documentation consist of beneficial owner withholding certificates described in paragraph (e)(2)(i) of this section, intermediary and flow-through withholding certificates described in paragraph (e)(3)(i) of this section, withholding foreign partnership certificates described in §1.1441–5(c)(2)(iv), documentary evidence described in §§1.1441–6(c)(3) or (4) and 1.6049–5(c)(1), and any other documentation or certificates applicable under other provisions of the Internal Revenue Code or regulations that certify or establish the status of the payee or beneficial owner as a U.S. or a foreign person. If a nonqualified intermediary is acting on behalf of another nonqualified intermediary or a flow-through entity, then the nonqualified intermediary must associate with its own withholding certificate the other nonqualified intermediary withholding certificate or the flow-through withholding certificate and separately identify all of the withholding certificates and other appropriate documentation that are associated with the withholding certificate of the other nonqualified intermediary or flow-through entity. Nothing in this paragraph (e)(3)(iii) shall require an intermediary to furnish original documentation. Copies of certificates or documentary evidence may be transmitted to the U.S. withholding agent, in which case the nonqualified intermediary must retain the original documentation for the same time period that the copy is required to be retained by the withholding agent under paragraph (e)(4)(iii) of this section and must provide it to the withholding agent upon request. For purposes of this paragraph (e)(3)(iii), a valid intermediary withholding certificate also includes a statement described in §1.871–14(c)(2)(v) furnished for interest to qualify as portfolio interest for purposes of sections 871(h) and 881(c). The information and certifications required on a Form W–8 described in this paragraph (e)(3)(iii) are as follows—

(A) The name and permanent resident address (as described in paragraph

(e)(2)(ii) of this section) of the nonqualified intermediary, and the country under the laws of which the nonqualified intermediary is created, incorporated, or governed;

(B) A certification that the nonqualified intermediary is not acting for its own account;

(C) If the nonqualified intermediary withholding certificate is used to transmit withholding certificates or other appropriate documentation for more than one person on whose behalf the nonqualified intermediary is acting, a withholding statement associated with the Form W–8 that provides all the information required by paragraph (e)(3)(iv) of this section; and

(D) Any other information, certifications, or statements as may be required by the form or accompanying instructions in addition to, or in lieu of, the information, certifications, and statements described in this paragraph (e)(3)(iii) or paragraph (e)(5)(iv) of this section.

(iv) *Withholding statement provided by nonqualified intermediary*—(A) *In general.* A nonqualified intermediary shall provide a withholding statement required by this paragraph (e)(3)(iv) to the extent the nonqualified intermediary is required to furnish, or does furnish, documentation for payees on whose behalf it receives reportable amounts (as defined in paragraph (e)(3)(vi) of this section) or to the extent it otherwise provides the documentation of such payees to a withholding agent. A nonqualified intermediary is not required to disclose information regarding persons for whom it collects reportable amounts unless it has actual knowledge that any such person is a U.S. non-exempt recipient as defined in paragraph (c)(21) of this section. Information regarding U.S. non-exempt recipients required under this paragraph (e)(3)(iv) must be provided irrespective of any requirement under foreign law that prohibits the disclosure of the identity of an account holder of a nonqualified intermediary or financial information relating to such account holder. Although a nonqualified intermediary is not required to provide documentation and other information required by this paragraph (e)(3)(iv) for persons other than U.S. non-exempt recipients, a withholding agent that does not receive documentation and such information must apply the presumption rules of paragraph (b) of this section, §§1.1441–5(d) and (e)(6) and 1.6049–5(d) or the withholding agent shall be liable for tax, interest, and penalties. A withholding agent must apply the presumption rules even if it is not required under chapter 61 of the Internal Revenue Code to obtain documentation to treat a payee as an exempt recipient and even though it has actual knowledge that the payee is a U.S. person. For example, if a nonqualified intermediary fails to provide a withholding agent with a Form W–9 for an account holder that is a U.S. exempt recipient, the withholding agent must presume (even if it has actual knowledge that the account holder is a U.S. exempt recipient), that the account holder is an undocumented foreign person with respect to amounts subject to withholding. See paragraph (b)(3)(v) of this section for applicable presumptions. Therefore, the withholding agent must withhold 30 percent from the payment even though if a Form W–9 had been provided, no withholding or reporting on the payment attributable to a U.S. exempt recipient would apply. Further, a nonqualified intermediary that fails to provide the documentation and the information under this paragraph (e)(3)(iv) for another withholding agent to report the payments on Forms 1042–S and Forms 1099 is not relieved of its responsibility to file information returns. See paragraph (b)(6) of this section. Therefore, unless the nonqualified intermediary itself files such returns and provides copies to the payees, it shall be liable for penalties under sections 6721 (failure to file information returns), and 6722 (failure to furnish payee statements), including the penalties under those sections for intentional failure to file information returns. In addition, failure to provide either the documentation or the information required by this paragraph (e)(3)(iv) results in a payment not being reliably associated with valid documentation. Therefore, the beneficial owners of the payment are not entitled to reduced rates of

withholding and if the full amount required to be held under the presumption rules is not withheld by the withholding agent, the nonqualified intermediary must withhold the difference between the amount withheld by the withholding agent and the amount required to be withheld. Failure to withhold shall result in the nonqualified intermediary being liable for tax under section 1461, interest, and penalties, including penalties under section 6656 (failure to deposit) and section 6672 (failure to collect and pay over tax).

(B) *General requirements.* A withholding statement must be provided prior to the payment of a reportable amount and must contain the information specified in paragraph (e)(3)(iv)(C) of this section. The statement must be updated as often as required to keep the information in the withholding statement correct prior to each subsequent payment. The withholding statement forms an integral part of the withholding certificate provided under paragraph (e)(3)(iii) of this section, and the penalties of perjury statement provided on the withholding certificate shall apply to the withholding statement. The withholding statement may be provided in any manner the nonqualified intermediary and the withholding agent mutually agree, including electronically. If the withholding statement is provided electronically, there must be sufficient safeguards to ensure that the information received by the withholding agent is the information sent by the nonqualified intermediary and all occasions of user access that result in the submission or modification of the withholding statement information must be recorded. In addition, an electronic system must be capable of providing a hard copy of all withholding statements provided by the nonqualified intermediary. A withholding agent will be liable for tax, interest, and penalties in accordance with paragraph (b)(7) of this section to the extent it does not follow the presumption rules of paragraph (b)(3) of this section or §§ 1.1441–5(d) and (e)(6), and 1.6049–5(d) for any payment of a reportable amount, or portion thereof, for which it does not have a valid withholding statement prior to making a payment.

(C) *Content of withholding statement.* The withholding statement provided by a nonqualified intermediary must contain the information required by this paragraph (e)(3)(iv)(C).

(*1*) The withholding statement must contain the name, address, TIN (if any) and the type of documentation (documentary evidence, Form W–9, or type of Form W–8) for every person from whom documentation has been received by the nonqualified intermediary and provided to the withholding agent and whether that person is a U.S. exempt recipient, a U.S. non-exempt recipient, or a foreign person. See paragraphs (c)(2), (20), and (21) of this section for the definitions of foreign person, U.S. exempt recipient, and U.S. non-exempt recipient. In the case of a foreign person, the statement must indicate whether the foreign person is a beneficial owner or an intermediary, flow-through entity, or U.S. branch described in paragraph (b)(2)(iv) of this section and include the type of recipient, based on recipient codes used for filing Forms 1042–S, if the foreign person is a recipient as defined in § 1.1461–1(c)(1)(ii).

(*2*) The withholding statement must allocate each payment, by income type, to every payee (including U.S. exempt recipients) for whom documentation has been provided. Any payment that cannot be reliably associated with valid documentation from a payee shall be treated as made to an unknown payee in accordance with the presumption rules of paragraph (b) of this section and §§ 1.1441–5(d) and (e)(6) and 1.6049–5(d). For this purpose, a type of income is determined by the types of income required to be reported on Forms 1042–S or 1099, as appropriate. Notwithstanding the preceding sentence, deposit interest (including original issue discount) described in section 871(i)(2)(A) or 881(d) and interest or original issue discount on short-term obligations as described in section 871(g)(1)(B) or 881(e) is only required to be allocated to the extent it is required to be reported on Form 1099 or Form 1042–S. See § 1.6049–8 (regarding reporting of bank deposit interest to certain foreign persons). If a payee receives income through another nonqualified intermediary, flow-through entity, or

U.S. branch described in paragraph (e)(2)(iv) of this section (other than a U.S. branch treated as a U.S. person), the withholding statement must also state, with respect to the payee, the name, address, and TIN, if known, of the other nonqualified intermediary or U.S. branch from which the payee directly receives the payment or the flow-through entity in which the payee has a direct ownership interest. If another nonqualified intermediary, flow-through entity, or U.S. branch fails to allocate a payment, the name of the nonqualified intermediary, flow-through entity, or U.S. branch that failed to allocate the payment shall be provided with respect to such payment.

(*3*) If a payee is identified as a foreign person, the nonqualified intermediary must specify the rate of withholding to which the payee is subject, the payee's country of residence and, if a reduced rate of withholding is claimed, the basis for that reduced rate (e.g., treaty benefit, portfolio interest, exempt under section 501(c)(3), 892, or 895). The allocation statement must also include the taxpayer identification numbers of those foreign persons for whom such a number is required under paragraph (e)(4)(vii) of this section or §1.1441–6(b)(1) (regarding claims for treaty benefits). In the case of a claim of treaty benefits, the nonqualified intermediary's withholding statement must also state whether the limitation on benefits and section 894 statements required by §1.1441–6(c)(5) have been provided, if required, in the beneficial owner's Form W–8 or associated with such owner's documentary evidence.

(*4*) The withholding statement must also contain any other information the withholding agent reasonably requests in order to fulfill its obligations under chapter 3, chapter 61 of the Internal Revenue Code, and section 3406.

(D) *Alternative procedures—(1) In general.* Under the alternative procedures of this paragraph (e)(3)(iv)(D), a nonqualified intermediary may provide information allocating a payment of a reportable amount to each payee (including U.S. exempt recipients) otherwise required under paragraph (e)(3)(iv)(B)*(2)* of this section after a payment is made. To use the alternative procedure of this paragraph (e)(3)(iv)(D), the nonqualified intermediary must inform the withholding agent on a statement associated with its nonqualified intermediary withholding certificate that it is using the procedure under this paragraph (e)(3)(iv)(D) and the withholding agent must agree to the procedure. If the requirements of the alternative procedure are met, a withholding agent, including the nonqualified intermediary using the procedures, can treat the payment as reliably associated with documentation and, therefore, the presumption rules of paragraph (b)(3) of this section and §§1.1441–5(d) and (e)(6) and 1.6049–5(d) do not apply even though information allocating the payment to each payee has not been received prior to the payment. See paragraph (e)(3)(iv)(D)(*7*) of this section, however, for a nonqualified intermediary's liability for tax and penalties if the requirements of this paragraph (e)(3)(iv)(D) are not met. These alternative procedures shall not be used for payments that are allocable to U.S. non-exempt recipients. Therefore, a nonqualified intermediary is required to provide a withholding agent with information allocating payments of reportable amounts to U.S. non-exempt recipients prior to the payment being made by the withholding agent.

(*2*) *Withholding rate pools.* In place of the information required in paragraph (e)(3)(iv)(C)(*2*) of this section allocating payments to each payee, the nonqualified intermediary must provide a withholding agent with withholding rate pool information prior to the payment of a reportable amount. The withholding statement must contain all other information required by paragraph (e)(3)(iv)(C) of this section. Further, each payee listed in the withholding statement must be assigned to an identified withholding rate pool. To the extent a nonqualified intermediary is required to, or does provide, documentation, the alternative procedures do not relieve the nonqualified intermediary from the requirement to provide documentation prior to the payment being made. Therefore, withholding certificates or other appropriate documentation and all information required by paragraph (e)(3)(iv)(C) of this section (other than allocation

information) must be provided to a withholding agent before any new payee receives a reportable amount. In addition, the withholding statement must be updated by assigning a new payee to a withholding rate pool prior to the payment of a reportable amount. A withholding rate pool is a payment of a single type of income, determined in accordance with the categories of income used to file Form 1042–S, that is subject to a single rate of withholding. A withholding rate pool may be established by any reasonable method to which the nonqualified intermediary and a withholding agent agree (*e.g.*, by establishing a separate account for a single withholding rate pool, or by dividing a payment made to a single account into portions allocable to each withholding rate pool). The nonqualified intermediary shall determine withholding rate pools based on valid documentation or, to the extent a payment cannot be reliably associated with valid documentation, the presumption rules of paragraph (b)(3) of this section and §§1.1441–5(d) and (e)(6) and 1.6049–5(d).

(*3*) *Allocation information*. The nonqualified intermediary must provide the withholding agent with sufficient information to allocate the income in each withholding rate pool to each payee (including U.S. exempt recipients) within the pool no later than January 31 of the year following the year of payment. Any payments that are not allocated to payees for whom documentation has been provided shall be allocated to an undocumented payee in accordance with the presumption rules of paragraph (b)(3) of this section and §§1.1441–5(d) and (e)(6) and 1.6049–5(d). Notwithstanding the preceding sentence, deposit interest (including original issue discount) described in section 871(i)(2)(A) or 881(d) and interest or original issue discount on short-term obligations as described in section 871(g)(1)(B) or 881(e) is not required to be allocated to a U.S. exempt recipient or a foreign payee, except as required under §1.6049–8 (regarding reporting of deposit interest paid to certain foreign persons).

(*4*) *Failure to provide allocation information*. If a nonqualified intermediary fails to provide allocation information, if required, by January 31 for any withholding rate pool, a withholding agent shall not apply the alternative procedures of this paragraph (e)(3)(iv)(D) to any payments of reportable amounts paid after January 31 in the taxable year following the calendar year for which allocation information was not given and any subsequent taxable year. Further, the alternative procedures shall be unavailable for any other withholding rate pool even though allocation information was given for that other pool. Therefore, the withholding agent must withhold on a payment of a reportable amount in accordance with the presumption rules of paragraph (b)(3) of this section, and §§1.1441–5(d) and (e)(6) and 1.6049–5(d), unless the nonqualified intermediary provides all of the information, including information sufficient to allocate the payment to each specific payee, required by paragraph (e)(3)(iv)(A) through (C) of this section prior to the payment. A nonqualified intermediary must allocate at least 90 percent of the income required to be allocated for each withholding rate pool or the nonqualified intermediary will be treated as having failed to provide allocation information for purposes of this paragraph (e)(3)(iv)(D). See paragraph (e)(3)(iv)(D)(7) of this section for liability for tax and penalties if a nonqualified intermediary fails to provide allocation information in whole or in part.

(*5*) *Cure provision*. A nonqualified intermediary may cure any failure to provide allocation information by providing the required allocation information to the withholding agent no later than February 14 following the calendar year of payment. If the withholding agent receives the allocation information by that date, it may apply the adjustment procedures of §1.1461–2 to any excess withholding for payments made on or after February 1 and on or before February 14. Any nonqualified intermediary that fails to cure by February 14, may request the ability to use the alternative procedures of this paragraph (e)(3)(iv)(D) by submitting a request, in writing, to the Assistant Commissioner (International). The request must state the

reason that the nonqualified intermediary did not comply with the alternative procedures of this paragraph (e)(3)(iv)(D) and steps that the nonqualified intermediary has taken, or will take, to ensure that no failures occur in the future. If the Assistant Commissioner (International) determines that the alternative procedures of this paragraph (e)(3)(iv)(D) may apply, a determination to that effect will be issued by the IRS to the nonqualified intermediary.

(*6*) *Form 1042–S reporting in case of allocation failure*. If a nonqualified intermediary fails to provide allocation information by February 14 following the year of payment for a withholding rate pool, the withholding agent must file Forms 1042-S for payments made to each payee in that pool (other than U.S. exempt recipients) in the prior calendar year by pro rating the payment to each payee (including U.S. exempt recipients) listed in the withholding statement for that withholding rate pool. If the nonqualified intermediary fails to allocate10 percent or less of an amount required to be allocated for a withholding rate pool, a withholding agent shall report the unallocated amount as paid to a single unknown payee in accordance with the presumption rules of paragraph (b) of this section and §§ 1.1441–5(d) and (e)(6) and 1.6049–5(d). The portion of the payment that can be allocated to specific recipients, as defined in § 1.1461–1(c)(1)(ii), shall be reported to each recipient in accordance with the rules of § 1.1461–1(c).

(*7*) *Liability for tax, interest, and penalties*. If a nonqualified intermediary fails to provide allocation information by February 14 following the year of payment for all or a portion of the payments made to any withholding rate pool, the withholding agent from whom the nonqualified intermediary received payments of reportable amounts shall not be liable for any tax, interest, or penalties, due solely to the errors or omissions of the nonqualified intermediary. See § 1.1441–7(b)(2) through (10) for the due diligence requirements of a withholding agent. Because failure by the nonqualified intermediary to provide allocation information results in a payment not being reliably associated with valid documentation, the beneficial owners for whom the nonqualified intermediary acts are not entitled to a reduced rate of withholding. Therefore, the nonqualified intermediary, as a withholding agent, shall be liable for any tax not withheld by the withholding agent in accordance with the presumption rules, interest on the under withheld tax if the nonqualified intermediary fails to pay the tax timely, and any applicable penalties, including the penalties under sections 6656 (failure to deposit), 6721 (failure to file information returns) and 6722 (failure to file payee statements). Failure to provide allocation information for more than 10 percent of the payments made to a particular withholding rate pool will be presumed to be an intentional failure within the meaning of sections 6721(e) and 6722(c). The nonqualified intermediary may rebut the presumption.

(*8*) *Applicability to flow-through entities and certain U.S. branches*. See paragraph (e)(3)(v) of this section and § 1.1441–5(c)(3)(iv) and (e)(5)(iv) for the applicability of this paragraph (e)(3)(iv) to U.S. branches described in paragraph (b)(2)(iv) of this section (other than U.S. branches treated as U.S. persons) and flow-through entities.

(E) *Notice procedures*. The IRS may notify a withholding agent that the alternative procedures of paragraph (e)(3)(iv)(D) of this section are not applicable to a specified nonqualified intermediary, a U.S. branch described in paragraph (b)(2)(iv) of this section, or a flow-through entity. If a withholding agent receives such a notice, it must commence withholding in accordance with the presumption rules of paragraph (b)(3) of this section and §§ 1.1441–5(d) and (e)(6) and 1.6049–5(d) unless the nonqualified intermediary, U.S. branch, or flow-through entity complies with the procedures in paragraphs (e)(3)(iv)(A) through (C) of this section. In addition, the IRS may notify a withholding agent, in appropriate circumstances, that it must apply the presumption rules of paragraph (b)(3) of this section and §§ 1.1441–5(d) and (e)(6) and 1.6049–5(d) to payments made to a nonqualified intermediary, a U.S. branch, or a flow-through entity even if the nonqualified

intermediary, U.S. branch or flow-through entity provides allocation information prior to the payment. A withholding agent that receives a notice under this paragraph (e)(3)(iv)(E) must commence withholding in accordance with the presumption rules within 30 days of the date of the notice. The IRS may withdraw its prohibition against using the alternative procedures of paragraph (e)(3)(iv)(D) of this section, or its requirement to follow the presumption rules, if the nonqualified intermediary, U.S. branch, or flow-through entity can demonstrate to the satisfaction of the Assistant Commissioner (International) or his delegate that it is capable of complying with the rules under chapter 3 of the Internal Revenue Code and any other conditions required by the Assistant Commissioner (International).

(v) *Withholding certificate from certain U.S. branches.* A U.S. branch certificate is a withholding certificate provided by a U.S. branch described in paragraph (b)(2)(iv) of this section that is not the beneficial owner of the income. The withholding certificate is provided with respect to reportable amounts and must state that such amounts are not effectively connected with the conduct of a trade or business in the United States. The withholding certificate must either transmit the appropriate documentation for the persons for whom the branch receives the payment (i.e., as an intermediary) or be provided as evidence of its agreement with the withholding agent to be treated as a U.S. person with respect to any payment associated with the certificate. A U.S. branch withholding certificate is valid only if it is furnished on a Form W–8, an acceptable substitute form, or such other form as the IRS may prescribe, it is signed under penalties of perjury by a person authorized to sign for the branch, its validity has not expired, and it contains the information, statements, and certifications described in this paragraph (e)(3)(v). If the certificate is furnished to transmit withholding certificates and other documentation, it must contain the information, certifications, and statements described in paragraphs (e)(3)(v)(A) through (C) of this section and in paragraphs (e)(3)(iii) and (iv) (alternative procedures) of this section, applying the term *U.S. branch* instead of the term *nonqualified intermediary*. If the certificate is furnished pursuant to an agreement to treat the U.S. branch as a U.S. person, the information and certifications required on the withholding certificate are limited to the following—

(A) The name of the person of which the branch is a part and the address of the branch in the United States;

(B) A certification that the payments associated with the certificate are not effectively connected with the conduct of its trade or business in the United States; and

(C) Any other information, certifications, or statements as may be required by the form or accompanying instructions in addition to, or in lieu of, the information and certification described in this paragraph (e)(3)(v).

(vi) *Reportable amounts.* For purposes of chapter 3 of the Internal Revenue Code, a nonqualified intermediary, qualified intermediary, flow-through entity, and U.S. branch described in paragraph (b)(2)(iv) of this section (other than a U.S. branch that agrees to be treated as a U.S. person) must provide a withholding certificate and associated documentation and other information with respect to reportable amounts. For purposes of the regulations under chapter 3 of the Internal Revenue Code, the term reportable amount means an amount subject to withholding within the meaning of §1.1441–2(a), bank deposit interest (including original issue discount) and similar types of deposit interest described in section 871(i)(2)(A) or 881(d) that are from sources within the United States, and any amount of interest or original issue discount from sources within the United States on the redemption of certain short-term obligations described in section 871(g)(1)(B) or 881(e). Reportable amounts shall not include amounts received on the sale or exchange (other than a redemption) of an obligation described in section 871(g)(1)(B) or 881(e) that is effected at an office outside the United States. See §1.6045–1(g)(3) to determine whether a sale is effected at an office outside the United States. Reportable amounts also do not include

payments with respect to deposits with banks and other financial institutions that remain on deposit for a period of two weeks or less, to amounts of original issue discount arising from a sale and repurchase transaction that is completed within a period of two weeks or less, or to amounts described in § 1.6049–5(b)(7), (10) or (11) (relating to certain obligations issued in bearer form). While short-term OID and bank deposit interest are not subject to withholding under chapter 3 of the Internal Revenue Code, such amounts may be subject to information reporting under section 6049 if paid to a U.S. person who is not an exempt recipient described in § 1.6049–4(c)(1)(ii) and to backup withholding under section 3406 in the absence of documentation. See § 1.6049–5(d)(3)(iii) for applicable procedures when such amounts are paid to a foreign intermediary.

(4) *Applicable rules*. The provisions in this paragraph (e)(4) describe procedures applicable to withholding certificates on Form W–8 or Form 8233 (or a substitute form) or documentary evidence furnished to establish foreign status. These provisions do not apply to Forms W–9 (or their substitutes). For corresponding provisions regrading Form W–9 (or a substitute form), see section 3406 and the regulations under that section.

(i) *Who may sign the certificate*. A withholding certificate (or other acceptable substitute) may be signed by any person authorized to sign a declaration under penalties of perjury on behalf of the person whose name is on the certificate as provided in section 6061 and the regulations under that section (relating to who may sign generally for an individual, estate, or trust, which includes certain agents who may sign returns and other documents), section 6062 and the regulations under that section (relating to who may sign corporate returns), and section 6063 and the regulations under that section (relating to who may sign partnership returns).

(ii) *Period of validity*—(A) *Three-year period*. A withholding certificate described in paragraph (e)(2)(i) of this section, or a certificate described in § 1.871–14(c)(2)(v) (furnished to qualify interest as portfolio interest for purposes of sections 871(h) and 881(c)), shall remain valid until the earlier of the last day of the third calendar year following the year in which the withholding certificate is signed or the day that a change in circumstances occurs that makes any information on the certificate incorrect. For example, a withholding certificate signed on September 30, 2001, remains valid through December 31, 2004, unless circumstances change that make the information on the form no longer correct. Documentary evidence described in §§ 1.1441–6(c)(3) or (4) or 1.6049–5(c)(1) shall remain valid until the earlier of the last day of the third calendar year following the year in which the documentary evidence is provided to the withholding agent or the day that a change in circumstances occurs that makes any information on the documentary evidence incorrect.

(B) *Indefinite validity period*. Notwithstanding paragraph (e)(4)(ii)(A) of this section, the following certificates or parts of certificates shall remain valid until the status of the person whose name is on the certificate is changed in a way relevant to the certificate or circumstances change that make the information on the certificate no longer correct:

(*1*) A withholding certificate described in paragraph (e)(2)(ii) of this section that is furnished with a TIN, provided that the withholding agent reports at least one payment annually to the beneficial owner under § 1.1461–1(c) or the TIN furnished on the certificate is reported to the IRS under the procedures described in § 1.1461–1(d). For example, assume a withholding agent receives a Form W–8 in 2001 from a beneficial owner with respect to an account that contains bonds, the interest on which must be reported on Form 1042–S under § 1.1461–1(c). The Form W–8 contains a valid TIN and the withholding agent reports on Forms 1042–S interest to the beneficial owner for 2001 through 2005. In 2005, the beneficial owner sells some of the bonds. For purposes of the exemption from Form 1099 reporting under § 1.6045–1(g), the withholding agent may consider the Form W–8 as valid, even though the payment of the sales proceeds is not reportable on Form 1042–S under § 1.1461–1(c) and

even though the Form W–8 was provided more than three years previously.

(*2*) A certificate described in paragraph (e)(3)(ii) of this section (a qualified intermediary withholding certificate) but not including the withholding certificates, documentary evidence, statements or other information associated with the certificate.

(*3*) A certificate described in paragraph (e)(3)(iii) of this section (a nonqualified intermediary certificate), but not including the withholding certificates, documentary evidence, statements or other information associated with the certificate.

(*4*) A certificate described in paragraph (e)(3)(v) of this section (a U.S. branch withholding certificate), but not including the withholding certificates, documentary evidence, statements or other information associated with the certificate.

(*5*) A certificate described in §1.1441–5(c)(2)(iv) (dealing with a certificate from a person representing to be a withholding foreign partnership).

(*6*) A certificate described in §1.1441–5(c)(3)(iii) (a withholding certificate from a nonwithholding foreign partnership) but not including the withholding certificates, documentary evidence, statements or other information required to be associated with the certificate.

(*7*) A certificate furnished by a person representing to be an integral part of a foreign government (within the meaning of §1.892–2T(a)(2)) in accordance with §1.1441–8(b), or by a person representing to be a foreign central bank of issue (within the meaning of §1.861–2(b)(4)) or the Bank for International Settlements in accordance with §1.1441–8(c)(1).

(*8*) A withholding certificate described in §1.1441–5(e)(5)(iii) provided by a foreign simple trust or a foreign grantor trust to transmit documentation of beneficiaries or owners, but not including the withholding certificates, documentary evidence, statements or other information associated with the certificate.

(C) *Withholding certificate for effectively connected income.* Notwithstanding paragraph (e)(4)(ii)(B)(*1*) of this section, the period of validity of a withholding certificate furnished to a withholding agent to claim a reduced rate of withholding for income that is effectively connected with the conduct of a trade or business within the United States shall be limited to the three-year period described in paragraph (e)(4)(ii)(A) of this section.

(D) *Change in circumstances.* If a change in circumstances makes any information on a certificate or other documentation incorrect, then the person whose name is on the certificate or other documentation must inform the withholding agent within 30 days of the change and furnish a new certificate or new documentation. A certificate or documentation becomes invalid from the date that the withholding agent holding the certificate or documentation knows or has reason to know that circumstances affecting the correctness of the certificate or documentation have changed. However, a withholding agent may choose to apply the provisions of paragraph (b)(3)(iv) of this section regarding the 90-day grace period as of that date while awaiting a new certificate or documentation or while seeking information regarding changes, or suspected changes, in the person's circumstances. If an intermediary (including a U.S. branch described in paragraph (b)(2)(iv)(A) of this section that passes through certificates to a withholding agent) or a flow-through entity becomes aware that a certificate or other appropriate documentation it has furnished to the person from whom it collects the payment is no longer valid because of a change in the circumstances of the person who issued the certificate or furnished the other appropriate documentation, then the intermediary or flow-through entity must notify the person from whom it collects the payment of the change of circumstances. It must also obtain a new withholding certificate or new appropriate documentation to replace the existing certificate or documentation whose validity has expired due to the change in circumstances. If a beneficial owner withholding certificate is used to claim foreign status only (and not, also, residence in a particular foreign country for purposes of an income tax treaty), a

change of address is a change in circumstances for purposes of this paragraph (e)(4)(ii)(D) only if it changes to an address in the United States. Further, a change of address within the same foreign country is not a change in circumstances for purposes of this paragraph (e)(4)(ii)(D). A change in the circumstances affecting the withholding information provided to the withholding agent in accordance with the provisions in paragraph (e) (3)(iv) or (5)(v) of this section or in § 1.1441–5(c)(3)(iv) shall terminate the validity of the withholding certificate with respect to the information that is no longer reliable unless the information is updated. A withholding agent may rely on a certificate without having to inquire into possible changes of circumstances that may affect the validity of the statement, unless it knows or has reason to know that circumstances have changed. A withholding agent may require a new certificate at any time prior to a payment, even though the withholding agent has no actual knowledge or reason to know that any information stated on the certificate has changed.

(iii) *Retention of withholding certificate.* A withholding agent must retain each withholding certificate and other documentation for as long as it may be relevant to the determination of the withholding agent's tax liability under section 1461 and § 1.1461–1.

(iv) *Electronic transmission of information*—(A) *In general.* A withholding agent may establish a system for a beneficial owner or payee to electronically furnish a Form W–8, an acceptable substitute Form W–8, or such other form as the Internal Revenue Service may prescribe. The system must meet the requirements described in paragraph (e)(4)(iv)(B) of this section. A withholding agent may accept Forms W–8 that are furnished electronically on or after January 1, 2000, provided the requirements of paragraph (e)(4)(iv)(B) of this section are met.

(B) *Requirements*—(*1*) *In general.* The electronic system must ensure that the information received is the information sent, and must document all occasions of user access that result in the submission renewal, or modification of a Form W–8. In addition, the design and operation of the electronic system, including access procedures, must make it reasonably certain that the person accessing the system and furnishing Form W–8 is the person named in the Form.

(*2*) *Same information as paper Form W–8.* The electronic transmission must provide the withholding agent or payor with exactly the same information as the paper Form W–8.

(*3*) *Perjury statement and signature requirements.* The electronic transmission must contain an electronic signature by the person whose name is on the Form W–8 and the signature must be under penalties of perjury in the manner described in this paragraph (e)(4)(iv)(B)(*3*).

(*i*) *Perjury statement.* The perjury statement must contain the language that appears on the paper Form W–8. The electronic system must inform the person whose name is on the Form W–8 that the person must make the declaration contained in the perjury statement and that the declaration is made by signing the Form W–8. The instructions and the language of the perjury statement must immediately follow the person's certifying statements and immediately precede the person's electronic signature.

(*ii*) *Electronic signature.* The act of the electronic signature must be effected by the person whose name is on the electronic Form W–8. The signature must also authenticate and verify the submission. For this purpose, the terms *authenticate* and *verify* have the same meanings as they do when applied to a written signature on a paper Form W–8. An electronic signature can be in any form that satisfies the foregoing requirements. The electronic signature must be the final entry in the person's Form W–8 submission.

(*4*) *Requests for electronic Form W–8 data.* Upon request by the Internal Revenue Service during an examination, the withholding agent must supply a hard copy of the electronic Form W–8 and a statement that, to the best of the withholding agent's knowledge, the electronic Form W–8 was filed by the person whose name is on the form. The hard copy of the electronic Form W–8

must provide exactly the same information as, but need not be identical to, the paper Form W–8.

(C) *Special requirements for transmission of Forms W–8 by an intermediary.* [Reserved]

(v) *Electronic confirmation of taxpayer identifying number on withholding certificate.* The Commissioner may prescribe procedures in a revenue procedure (see § 601.601(d)(2) of this chapter) or other appropriate guidance to require a withholding agent to confirm electronically with the IRS information concerning any TIN stated on a withholding certificate.

(vi) *Acceptable substitute form.* A withholding agent may substitute its own form instead of an official Form W–8 or 8233 (or such other official form as the IRS may prescribe). Such a substitute for an official form will be acceptable if it contains provisions that are substantially similar to those of the official form, it contains the same certifications relevant to the transactions as are contained on the official form and these certifications are clearly set forth, and the substitute form includes a signature-under-penalties-of-perjury statement identical to the one stated on the official form. The substitute form is acceptable even if it does not contain all of the provisions contained on the official form, so long as it contains those provisions that are relevant to the transaction for which it is furnished. For example, a withholding agent that pays no income for which treaty benefits are claimed may develop a substitute form that is identical to the official form, except that it does not include information regarding claim of benefits under an income tax treaty. A withholding agent who uses a substitute form must furnish instructions relevant to the substitute form only to the extent and in the manner specified in the instructions to the official form. A withholding agent may refuse to accept a certificate from a payee or beneficial owner (including the official Form W–8 or 8233) if the certificate is not provided on the acceptable substitute form provided by the withholding agent. However, a withholding agent may refuse to accept a certificate provided by a payee or beneficial owner only if the withholding agent furnishes the payee or beneficial owner with an acceptable substitute form immediately upon receipt of an unacceptable form or within 5 business days of receipt of an unacceptable form from the payee or beneficial owner. In that case, the substitute form is acceptable only if it contains a notice that the withholding agent has refused to accept the form submitted by the payee or beneficial owner and that the payee or beneficial owner must submit the acceptable form provided by the withholding agent in order for the payee or beneficial owner to be treated as having furnished the required withholding certificate.

(vii) *Requirement of taxpayer identifying number.* A TIN must be stated on a withholding certificate when required by this paragraph (e)(4)(vii). A TIN is required to be stated on—

(A) A withholding certificate on which a beneficial owner is claiming the benefit of a reduced rate under an income tax treaty (other than for amounts described in § 1.1441–6(c)(2);

(B) A withholding certificate on which a beneficial owner is claiming exemption from withholding because income is effectively connected with a U.S. trade or business;

(C) A withholding certificate on which a beneficial owner is claiming exemption from withholding under section 871(f) for certain annuities received under qualified plans;

(D) A withholding certificate on which a beneficial owner is claiming an exemption based solely on a foreign organization's claim of tax exempt status under section 501(c) or private foundation status (however, a TIN is not required from a foreign private foundation that is subject to the 4-percent tax under section 4948(a) on income if that income would be exempt from withholding but for section 4948(a) (*e.g.*, portfolio interest));

(E) A withholding certificate from a person representing to be a qualified intermediary described in paragraph (e)(5)(ii) of this section;

(F) A withholding certificate from a person representing to be a withholding foreign partnership described in § 1.1441–5(c)(2)(i));

(G) A withholding certificate from a person representing to be a foreign grantor trust with 5 or fewer grantors;

(H) A withholding certificate provided by a foreign organization that is described in section 501(c);

(I) A withholding certificate from a person representing to be a U.S. branch described in paragraph (b)(2)(iv) of this section.

(viii) *Reliance rules.* A withholding agent may rely on the information and certifications stated on withholding certificates or other documentation without having to inquire into the truthfulness of this information or certification, unless it has actual knowledge or reason to know that the same is untrue. In the case of amounts described in §1.1441–6(c)(2), a withholding agent described in §1.1441–7(b)(2)(ii) has reason to know that the information or certifications on a certificate are untrue only to the extent provided in §1.1441–7(b)(2)(ii). See §1.1441–6(b)(1) for reliance on representations regarding eligibility for a reduced rate under an income tax treaty. Paragraphs (e)(4)(viii) (A) and (B) of this section provide examples of such reliance.

(A) *Classification.* A withholding agent may rely on the claim of entity classification indicated on the withholding certificate that it receives from or for the beneficial owner, unless it has actual knowledge or reason to know that the classification claimed is incorrect. A withholding agent may not rely on a person's claim of classification other than as a corporation if the name of the corporation indicates that the person is a per se corporation described in §301.7701–2(b)(8)(i) of this chapter unless the certificate contains a statement that the person is a grandfathered per se corporation described in §301.7701–2(b)(8) of this chapter and that its grandfathered status has not been terminated. In the absence of reliable representation or information regarding the classification of the payee or beneficial owner, see §1.1441–1(b)(3)(ii) for applicable presumptions.

(B) *Status of payee as an intermediary or as a person acting for its own account.* A withholding agent may rely on the type of certificate furnished as indicative of the payee's status as an intermediary or as an owner, unless the withholding agent has actual knowledge or reason to know otherwise. For example, a withholding agent that receives a beneficial owner withholding certificate from a foreign financial institution may treat the institution as the beneficial owner, unless it has information in its records that would indicate otherwise or the certificate contains information that is not consistent with beneficial owner status (e.g., sub-account numbers or names). If the financial institution also acts as an intermediary, the withholding agent may request that the institution furnish two certificates, i.e., a beneficial owner certificate described in paragraph (e)(2)(i) of this section for the amounts that it receives as a beneficial owner, and an intermediary withholding certificate described in paragraph (e)(3)(i) of this section for the amounts that it receives as an intermediary. In the absence of reliable representation or information regarding the status of the payee as an owner or as an intermediary, see paragraph (b)(3)(v)(A) for applicable presumptions.

(ix) *Certificates to be furnished for each account unless exception applies.* Unless otherwise provided in this paragraph (e)(4)(ix), a withholding agent that is a financial institution with which a customer may open an account shall obtain withholding certificates or other appropriate documentation on an account-by-account basis.

(A) *Coordinated account information system in effect.* A withholding agent may rely on the withholding certificate or other appropriate documentation furnished by a customer for a pre-existing account under any one or more of the circumstances described in this paragraph (e)(4)(ix)(A).

(*1*) A withholding agent may rely on documentation furnished by a customer for another account if all such accounts are held at the same branch location.

(*2*) A withholding agent may rely on documentation furnished by a customer for an account held at another branch location of the same withholding agent or at a branch location of a person related to the withholding agent if the withholding agent and the related person are part of a universal

account system that uses a customer identifier that can be used to retrieve systematically all other accounts of the customer. See § 31.3406(c)(3)(ii) and (iii)(C) of this chapter for an identical procedure for purposes of backup withholding. For purposes of this paragraph (e)(4)(ix)(A), a withholding agent is related to another person if it is related within the meaning of section 267(b) or 707(b).

(*3*) A withholding agent may rely on documentation furnished by a customer for an account held at another branch location of the same withholding agent or at a branch location of a person related to the withholding agent if the withholding agent and the related person are part of an information system other than a universal account system and the information system is described in this paragraph (e)(4)(ix)(A)(*3*). The system must allow the withholding agent to easily access data regarding the nature of the documentation, the information contained in the documentation, and its validity status, and must allow the withholding agent to easily transmit data into the system regarding any facts of which it becomes aware that may affect the reliability of the documentation. The withholding agent must be able to establish how and when it has accessed the data regarding the documentation and, if applicable, how and when it has transmitted data regarding any facts of which it became aware that may affect the reliability of the documentation. In addition, the withholding agent or the related party must be able to establish that any data it has transmitted to the information system has been processed and appropriate due diligence has been exercised regarding the validity of the documentation.

(*4*) A withholding agent may rely on documentation furnished by a beneficial owner or payee to an agent of the withholding agent. The agent may retain the documentation as part of an information system maintained for a single or multiple withholding agents provided that the system permits any withholding agent that uses the system to easily access data regarding the nature of the documentation, the information contained in the documentation, and its validity, and must allow the withholding agent to easily transmit data into the system regarding any facts of which it becomes aware that may affect the reliability of the documentation. The withholding agent must be able to establish how and when it has accessed the data regarding the documentation and, if applicable, how and when it has transmitted data regarding any facts of which it became aware that may affect the reliability of the documentation. In addition, the withholding agent must be able to establish that any data it has transmitted to the information system has been processed and appropriate due diligence has been exercised regarding the validity of the documentation.

(B) *Family of mutual funds.* An interest in a mutual fund that has a common investment advisor or common principal underwriter with other mutual funds (within the same family of funds) may, in the discretion of the mutual fund, be represented by one single withholding certificate where shares are acquired or owned in any of the funds. See § 31.3406(h)–3(a)(2) of this chapter for an identical procedures for purposes of backup withholding.

(C) *Special rule for brokers—(1) In general.* A withholding agent may rely on the certification of a broker that the broker holds a valid beneficial owner withholding certificate described in paragraph (e)(2)(i) of this section or other appropriate documentation for that beneficial owner with respect to any readily tradable instrument, as defined in § 31.3406(h)–1(d) of this chapter, if the broker is a United States person (including a U.S. branch treated as a U.S. person under paragraph (b)(2)(iv) of this section) that is acting as the agent of a beneficial owner and the U.S. broker has been provided a valid Form W–8 or other appropriate documentation. The certification must be in writing or in electronic form and contain all of the information required of a nonqualified intermediary under paragraphs (e)(3)(iv)(B) and (C) of this section. If a U.S. broker chooses to use this paragraph (e)(4)(ix)(C), that U.S. broker will be solely responsible for applying the rules of § 1.1441–7(b) to the withholding certificates or other appropriate documentation. For purposes of this paragraph (c)(4)(ix)(C), the term

broker means a person treated as a broker under § 1.6045–1(a).

(*2*) The following example illustrates the rules of this paragraph (e)(4)(ix)(C):

Example. SCO is a U.S. securities clearing organization that provides clearing services for correspondent broker, CB, a U.S. corporation. Pursuant to a fully disclosed clearing agreement, CB fully discloses the identity of each of its customers to SCO. Part of SCO's clearing duties include the crediting of income and gross proceeds of readily tradeable instruments (as defined in § 31.3406(h)–1(d)) to each customer's account. For each disclosed customer that is a foreign beneficial owner, CB provides SCO with information required under paragraphs (e)(3)(iv)(B) and (C) of this section that is necessary to apply the correct rate of withholding and to file Forms 1042–S. SCO may use the representations and beneficial owner information provided by CB to determine the proper amount of withholding and to file Forms 1042–S. CB is responsible for determining the validity of the withholding certificates or other appropriate documentation under § 1.1441–1(b).

(5) *Qualified intermediaries*—(i) *General rule*. A qualified intermediary, as defined in paragraph (e)(5)(ii) of this section, may furnish a qualified intermediary withholding certificate to a withholding agent. The withholding certificate provides certifications on behalf of other persons for the purpose of claiming and verifying reduced rates of withholding under section 1441 or 1442 and for the purpose of reporting and withholding under other provisions of the Internal Revenue Code, such as the provisions under chapter 61 and section 3406 (and the regulations under those provisions). Furnishing such a certificate is in lieu of transmitting to a withholding agent withholding certificates or other appropriate documentation for the persons for whom the qualified intermediary receives the payment, including interest holders in a qualified intermediary that is fiscally transparent under the regulations under section 894. Although the qualified intermediary is required to obtain withholding certificates or other appropriate documentation from beneficial owners, payees, or interest holders pursuant to its agreement with the IRS, it is generally not required to attach such documentation to the intermediary withholding certificate. Notwithstanding the preceding sentence a qualified intermediary must provide a withholding agent with the Forms W–9, or disclose the names, addresses, and taxpayer identifying numbers, if known, of those U.S. non-exempt recipients for whom the qualified intermediary receives reportable amounts (within the meaning of paragraph (e)(3)(vi) of this section) to the extent required in the qualified intermediary's agreement with the IRS. A person may claim qualified intermediary status before an agreement is executed with the IRS if it has applied for such status and the IRS authorizes such status on an interim basis under such procedures as the IRS may prescribe.

(ii) *Definition of qualified intermediary*. With respect to a payment to a foreign person, the term *qualified intermediary* means a person that is a party to a withholding agreement with the IRS and such person is—

(A) A foreign financial institution or a foreign clearing organization (as defined in § 1.163–5(c)(2)(i)(D)(*8*), without regard to the requirement that the organization hold obligations for members), other than a U.S. branch or U.S. office of such institution or organization;

(B) A foreign branch or office of a U.S. financial institution or a foreign branch or office of a U.S. clearing organization (as defined in § 1.163–5(c)(2)(i)(D)(*8*), without regard to the requirement that the organization hold obligations for members);

(C) A foreign corporation for purposes of presenting claims of benefits under an income tax treaty on behalf of its shareholders; or

(D) Any other person acceptable to the IRS.

(iii) *Withholding agreement*—(A) *In general*. The IRS may, upon request, enter into a withholding agreement with a foreign person described in paragraph (e)(5)(ii) of this section pursuant to such procedures as the IRS may prescribe in published guidance (see § 601.601(d)(2) of this chapter). Under the withholding agreement, a qualified intermediary shall generally be subject to the applicable withholding and reporting provisions applicable to withholding agents and payors under chapters 3 and 61 of the Internal Revenue Code, section 3406, the regulations

under those provisions, and other withholding provisions of the Internal Revenue Code, except to the extent provided under the agreement.

(B) *Terms of the withholding agreement*. Generally, the agreement shall specify the type of certifications and documentation upon which the qualified intermediary may rely to ascertain the classification (e.g., corporation or partnership) and status (i.e., U.S. or foreign) of beneficial owners and payees who receive payments collected by the qualified intermediary and, if necessary, entitlement to the benefits of a reduced rate under an income tax treaty. The agreement shall specify if, and to what extent, the qualified intermediary may assume primary withholding responsibility in accordance with paragraph (e)(5)(iv) of this section. It shall also specify the extent to which applicable return filing and information reporting requirements are modified so that, in appropriate cases, the qualified intermediary may report payments to the IRS on an aggregated basis, without having to disclose the identity of beneficial owners and payees. However, the qualified intermediary may be required to provide to the IRS the name and address of those foreign customers who benefit from a reduced rate under an income tax treaty pursuant to the qualified intermediary arrangement for purposes of verifying entitlement to such benefits, particularly under an applicable limitation on benefits provision. Under the agreement, a qualified intermediary may agree to act as an acceptance agent to perform the duties described in §301.6109–1(d)(3)(iv)(A) of this chapter. The agreement may specify the manner in which applicable procedures for adjustments for underwithholding and overwithholding, including refund procedures, apply in the context of a qualified intermediary arrangement and the extent to which applicable procedures may be modified. In particular, a withholding agreement may allow a qualified intermediary to claim refunds of overwithheld amounts. If relevant, the agreement shall specify the manner in which the qualified intermediary may deal with payments to other intermediaries and flow-through entities. In addition, the agreement shall specify the manner in which the IRS will verify compliance with the agreement. In appropriate cases, the IRS may agree to rely on audits performed by an intermediary's approved auditor. In such a case, the IRS's audit may be limited to the audit of the auditor's records (including work papers of the auditor and reports prepared by the auditor indicating the methodology employed to verify the entity's compliance with the agreement). For this purpose, the agreement shall specify the auditor or class of auditors that are approved. Generally, an auditor will not be approved if the auditor is not subject to laws, regulations, or rules that impose sanctions for failure to exercise its independence and to perform the audit competently. The agreement may include provisions for the assessment and collection of tax in the event that failure to comply with the terms of the agreement results in the failure by the withholding agent or the qualified intermediary to withhold and deposit the required amount of tax. Further, the agreement may specify the procedures by which deposits of amounts withheld are to be deposited, if different from the deposit procedures under the Internal Revenue Code and applicable regulations. To determine whether to enter a qualified intermediary withholding agreement and the terms of any particular withholding agreement, the IRS will consider appropriate factors including whether or not the foreign person agrees to assume primary withholding responsibility, the type of local know-your-customer laws and practices to which it is subject, the extent and nature of supervisory and regulatory control exercised under the laws of the foreign country over the foreign person, the volume of investments in U.S. securities (determined in dollar amounts and number of account holders), the financial condition of the foreign person, and whether the qualified intermediary is a resident of a country with which the United States has an income tax treaty.

(iv) *Assignment of primary withholding responsibility*. Any person who meets the definition of a withholding agent under §1.1441–7(a) (whether a U.S. person or a foreign person) is required to

withhold and deposit any amount withheld under § 1.1461–1(a) and to make the returns prescribed by § 1.1461–1(b) and (c). If permitted by its qualified intermediary agreement, a qualified intermediary agreement may, however, inform a withholding agent from which it receives a payment that it will assume the primary obligation to withhold, deposit, and report amounts under chapter 3 of the Internal Revenue Code and/or under chapter 61 of the Internal Revenue Code and section 3406. If a withholding agent makes a payment of an amount subject to withholding, as defined in § 1.1441–2(a), or a reportable payment, as defined in section 3406(b), to a qualified intermediary that represents to the withholding agent that it has assumed primary withholding responsibility for the payment, the withholding agent is not required to withhold on the payment. The withholding agent is not required to determine that the qualified intermediary agreement actually permits the qualified intermediary to assume primary withholding responsibility. A qualified intermediary that assumes primary withholding responsibility under chapter 3 of the Internal Revenue Code or primary reporting and backup withholding responsibility under chapter 61 and section 3406 is not required to assume primary withholding responsibility for all accounts it has with a withholding agent but must assume primary withholding responsibility for all payments made to any one account that it has with the withholding agent. A qualified intermediary may agree with the withholding agent to assume primary withholding responsibility under chapter 3 and section 3406, only if expressly permitted to do so under its agreement with the IRS.

(v) *Withholding statement*—(A) *In general*. A qualified intermediary must provide each withholding agent from which it receives reportable amounts, as defined in paragraph (e)(3)(vi) of this section, as a qualified intermediary with a written statement (the withholding statement) containing the information specified in paragraph (e)(5)(v)(B) of this section. A withholding statement is not required, however, if all of the information a withholding agent needs to fulfill its withholding and reporting requirements is contained in the withholding certificate. The qualified intermediary agreement may require, in appropriate circumstances, the qualified intermediary to include information in its withholding statement relating to payments other than payments of reportable amounts. The withholding statement forms an integral part of the qualified intermediary's qualified intermediary withholding certificate and the penalties of perjury statement provided on the withholding certificate shall apply to the withholding statement as well. The withholding statement may be provided in any manner, and in any form, to which qualified intermediary and the withholding agent mutually agree, including electronically. If the withholding statement is provided electronically, there must be sufficient safeguards to ensure that the information received by the withholding agent is the information sent by qualified intermediary and must also document all occasions of user access that result in the submission or modification of withholding statement information. In addition, the electronic system must be capable of providing a hard copy of all withholding statements provided by the qualified intermediary. The withholding statement shall be updated as often as necessary for the withholding agent to meet its reporting and withholding obligations under chapters 3 and 61 of the Internal Revenue Code and section 3406. A withholding agent will be liable for tax, interest, and penalties in accordance with paragraph (b)(7) of this section to the extent it does not follow the presumption rules of paragraph (b)(3) of this section, §§ 1.1441–5(d) and (e)(6), and 1.6049–5(d) for any payment, or portion thereof, for which it does not have a valid withholding statement prior to making a payment.

(B) *Content of withholding statement*. The withholding statement must contain sufficient information for a withholding agent to apply the correct rate of withholding on payments from the accounts identified on the statement and to properly report such payments

on Forms 1042–S and Forms 1099, as applicable. The withholding statement must—

(*1*) Designate those accounts for which the qualified intermediary acts as a qualified intermediary;

(*2*) Designate those accounts for which qualified intermediary assumes primary withholding responsibility under chapter 3 of the Internal Revenue Code and/or primary reporting and backup withholding responsibility under chapter 61 and section 3406; and

(*3*) Provide information regarding withholding rate pools, as described in paragraph (e)(5)(v)(C) of this section.

(C) *Withholding rate pools*—(*1*) *In general*. Except to the extent it has assumed both primary withholding responsibility under chapter 3 of the Internal Revenue Code and primary reporting and backup withholding responsibility under chapter 61 and section 3406 with respect to a payment, a qualified intermediary shall provide as part of its withholding statement the withholding rate pool information that is required for the withholding agent to meet its withholding and reporting obligations under chapters 3 and 61 of the Internal Revenue Code and section 3406. A withholding rate pool is a payment of a single type of income, determined in accordance with the categories of income reported on Form 1042–S or Form 1099, as applicable, that is subject to a single rate of withholding. A withholding rate pool may be established by any reasonable method on which the qualified intermediary and a withholding agent agree (*e.g.*, by establishing a separate account for a single withholding rate pool, or by dividing a payment made to a single account into portions allocable to each withholding rate pool). To the extent a qualified intermediary does not assume primary reporting and backup withholding responsibility under chapter 61 and section 3406, a qualified intermediary's withholding statement must establish a separate withholding rate pool for each U.S. non-exempt recipient account holder that the qualified intermediary has disclosed to the withholding agent unless the qualified intermediary uses the alternative procedures in paragraph (e)(5)(v)(C)(*2*) of this section. A qualified intermediary shall determine withholding rate pools based on valid documentation that it obtains under its withholding agreement with the IRS, or if a payment cannot be reliably associated with valid documentation, under the applicable presumption rules. If a qualified intermediary has an account holder that is another intermediary (whether a qualified intermediary or a non-qualified intermediary) or a flow-through entity, the qualified intermediary may combine the account holder information provided by the intermediary or flow-through entity with the qualified intermediary's direct account holder information to determine the qualified intermediary's withholding rate pools.

(*2*) *Alternative procedure for U.S. non-exempt recipients*. If permitted under its agreement with the IRS, a qualified intermediary may, by mutual agreement with a withholding agent, establish a single zero withholding rate pool that includes U.S. non-exempt recipient account holders for whom the qualified intermediary has provided Forms W–9 prior to the withholding agent paying any reportable payments, as defined in the qualified intermediary agreement, and a separate withholding rate pool (subject to 31-percent withholding) that includes only U.S. non-exempt recipient account holders for whom a qualified intermediary has not provided Forms W–9 prior to the withholding agent paying any reportable payments. If a qualified intermediary chooses the alternative procedure of this paragraph (e)(5)(v)(C)(*2*), the qualified intermediary must provide the information required by its qualified intermediary agreement to the withholding agent no later than January 15 of the year following the year in which the payments are paid. Failure to provide such information will result in the application of penalties to the qualified intermediary under sections 6721 and 6722, as well as any other applicable penalties, and may result in the termination of the qualified intermediary's withholding agreement with the IRS. A withholding agent shall not be liable for tax, interest, or penalties for failure to backup withhold or report information under chapter 61 of the Internal Revenue

Code due solely to the errors or omissions of the qualified intermediary. If a qualified intermediary fails to provide the allocation information required by this paragraph (e)(5)(v)(C)(*2*), with respect to U.S. non-exempt recipients, the withholding agent shall report the unallocated amount paid from the withholding rate pool to an unknown recipient, or otherwise in accordance with the appropriate Form 1099 and the instructions accompanying the form.

(f) *Effective date*—(1) *In general.* This section applies to payments made after December 31, 2000.

(2) *Transition rules*—(i) *Special rules for existing documentation.* For purposes of paragraphs (d)(3) and (e)(2)(i) of this section, the validity of a withholding certificate (namely, Form W–8, 8233, 1001, 4224, or 1078 , or a statement described in §1.1441–5 in effect prior to January 1, 2001 (see §1.1441–5 as contained in 26 CFR part 1, revised April 1, 1999)) that was valid on January 1, 1998 under the regulations in effect prior to January 1, 2001 (see 26 CFR parts 1 and 35a, revised April 1, 1999) and expired, or will expire, at any time during 1998, is extended until December 31, 1998. The validity of a withholding certificate that is valid on or after January 1, 1999, remains valid until its validity expires under the regulations in effect prior to January 1, 2001 (see 26 CFR parts 1 and 35a, revised April 1, 1999) but in no event will such withholding certificate remain valid after December 31, 2000. The rule in this paragraph (f)(2)(i), however, does not apply to extend the validity period of a withholding certificate that expires solely by reason of changes in the circumstances of the person whose name is on the certificate. Notwithstanding the first three sentences of this paragraph (f)(2)(i), a withholding agent may choose to not take advantage of the transition rule in this paragraph (f)(2)(i) with respect to one or more withholding certificates valid under the regulations in effect prior to January 1, 2001 (see 26 CFR parts 1 and 35a, revised April 1, 1999) and, therefore, to require withholding certificates conforming to the requirements described in this section (new withholding certificates). For purposes of this section, a new withholding certificate is deemed to satisfy the documentation requirement under the regulations in effect prior to January 1, 2001 (see 26 CFR parts 1 and 35a, revised April 1, 1999). Further, a new withholding certificate remains valid for the period specified in paragraph (e)(4)(ii) of this section, regardless of when the certificate is obtained.

(ii) *Lack of documentation for past years.* A taxpayer may elect to apply the provisions of paragraphs (b)(7)(i)(B), (ii), and (iii) of this section, dealing with liability for failure to obtain documentation timely, to all of its open tax years, including tax years that are currently under examination by the IRS. The election is made by simply taking action under those provisions in the same manner as the taxpayer would take action for payments made after December 31, 2000.

[T.D. 8734, 62 FR 53424, Oct. 14, 1997, as amended by T.D. 8804, 63 FR 72184, 72187, Dec. 31, 1998; T.D. 8856, 64 FR 73409, 73412, Dec. 30, 1999; T.D. 8881, 65 FR 32170, 32211, May 22, 2000; 66 FR 18188, Apr. 6, 2001]

§1.1441–2 Amounts subject to withholding.

(a) *In general.* For purposes of the regulations under chapter 3 of the Internal Revenue Code, the term *amounts subject to withholding* means amounts from sources within the United States that constitute either fixed or determinable annual or periodical income described in paragraph (b) of this section or other amounts subject to withholding described in paragraph (c) of this section. For purposes of this paragraph (a), an amount shall be treated as being from sources within the United States if the source of the amount cannot be determined at the time of payment. See §1.1441–3(d)(1) for determining the amount to be withheld from a payment in the absence of information at the time of payment regarding the source of the amount. Amounts subject to withholding include amounts that are not fixed or determinable annual or periodical income and upon which withholding is specifically required under a provision of this section or another section of the regulations under chapter 3 of the Internal Revenue Code (such as corporate distributions upon which withholding is

required under §1.1441–3(c)(1) that do not constitute dividend income). Amounts subject to withholding do not include—

(1) Amounts described in §1.1441–1(b)(4)(i) to the extent they involve interest on obligations in bearer form or on foreign-targeted registered obligations (but, in the case of a foreign-targeted registered obligation, only to the extent of those amounts paid to a registered owner that is a financial institution within the meaning of section 871(h)(5)(B) or a member of a clearing organization which member is the beneficial owner of the obligation);

(2) Amounts described in §1.1441–1(b)(4)(ii) (dealing with bank deposit interest and similar types of interest (including original issue discount) described in section 871(i)(2)(A) or 881(d));

(3) Amounts described in §1.1441–1(b)(4)(iv) (dealing with interest or original issue discount on certain short-term obligations described in section 871(g)(1)(B) or 881(e));

(4) Amounts described in §1.1441–1(b)(4)(xx) (dealing with income from certain gambling winnings exempt from tax under section 871(j));

(5) Amounts paid as part of the purchase price of an obligation sold or exchanged between interest payment dates, unless the sale or exchange is part of a plan the principal purpose of which is to avoid tax and the withholding agent has actual knowledge or reason to know of such plan;

(6) Original issue discount paid as part of the purchase price of an obligation sold or exchanged in a transaction other than a redemption of such obligation, unless the purchase is part of a plan the principal purpose of which is to avoid tax and the withholding agent has actual knowledge or reason to know of such plan; and

(7) Insurance premiums paid with respect to a contract that is subject to the section 4371 excise tax.

(b) *Fixed or determinable annual or periodical income*—(1) *In general*—(i) *Definition*. For purposes of chapter 3 of the Internal Revenue Code and the regulations thereunder, fixed or determinable annual or periodical income includes all income included in gross income under section 61 (including original issue discount) except for the items specified in paragraph (b)(2) of this section. Items of income that are excluded from gross income under a provision of law without regard to the U.S. or foreign status of the owner of the income, such as interest excluded from gross income under section 103(a) or qualified scholarship income under section 117, shall not be treated as fixed or determinable annual or periodical income under chapter 3 of the Internal Revenue Code. Income excluded from gross income under section 892 (income of foreign governments) or section 115 (income of a U.S. possession) is fixed or determinable annual or periodical income since the exclusion from gross income under those sections is dependent on the foreign status of the owner of the income. See §1.306–3(h) for treating income from the disposition of section 306 stock as fixed or determinable annual or periodical income.

(ii) *Manner of payment*. The term *fixed or determinable annual or periodical* is merely descriptive of the character of a class of income. If an item of income falls within the class of income contemplated in the statute and described in paragraph (a) of this section, it is immaterial whether payment of that item is made in a series of payments or in a single lump sum. Further, the income need not be paid annually if it is paid periodically; that is to say, from time to time, whether or not at regular intervals. The fact that a payment is not made annually or periodically does not, however, prevent it from being fixed or determinable annual or periodical income (e.g., a lump sum payment). In addition, the fact that the length of time during which the payments are to be made may be increased or diminished in accordance with someone's will or with the happening of an event does not disqualify the payment as determinable or periodical. For this purpose, the share of the fixed or determinable annual or periodical income of an estate or trust from sources within the United States which is required to be distributed currently, or which has been paid or credited during the taxable year, to a nonresident alien beneficiary of such estate or trust constitutes fixed or determinable annual or periodical income.

(iii) *Determinability of amount.* An item of income is fixed when it is to be paid in amounts definitely pre-determined. An item of income is determinable if the amount to be paid is not known but there is a basis of calculation by which the amount may be ascertained at a later time. For example, interest is determinable even if it is contingent in that its amount cannot be determined at the time of payment of an amount with respect to a loan because the calculation of the interest portion of the payment is contingent upon factors that are not fixed at the time of the payment. For purposes of this section, an amount of income does not have to be determined at the time that the payment is made in order to be determinable. An amount of income described in paragraph (a) of this section which the withholding agent knows is part of a payment it makes but which it cannot calculate exactly at the time of payment, is nevertheless determinable if the determination of the exact amount depends upon events expected to occur at a future date. In contrast, a payment which may be income in the future based upon events that are not anticipated at the time the payment is made is not determinable. For example, loan proceeds may become income to the borrower when and to the extent the loan is canceled without repayment. While the cancellation of the debt is income to the borrower when it occurs, it is not determinable at the time the loan proceeds are disbursed to the borrower if the lack of repayment leading to the cancellation of part or all of the debt was not anticipated at the time of disbursement. The fact that the source of an item of income cannot be determined at the time that the payment is made does not render a payment not determinable. See § 1.1441–3(d)(1) for determining the amount to be withheld from a payment in the absence of information at the time of payment regarding the source of the amount.

(2) *Exceptions.* For purposes of chapter 3 of the Code and the regulations thereunder, the items of income described in this paragraph (b)(2) are not fixed or determinable annual or periodical income—

(i) Gains derived from the sale of property (including market discount and option premiums), except for gains described in paragraph (b)(3) or (c) of this section; and

(ii) Any other income that the Internal Revenue Service (IRS) may determine, in published guidance (see § 601.601(d)(2) of this chapter), is not fixed or determinable annual or periodical income.

(3) *Original issue discount*—(i) *Amount subject to tax.* An amount representing original issue discount is fixed or determinable annual or periodical income that is subject to tax under sections 871(a)(1)(C) and 881(a)(3) to the extent provided in those sections and this paragraph (b)(3) if not otherwise excluded under paragraph (a) of this section. An amount of original issue discount is subject to tax with respect to a foreign beneficial owner of an obligation carrying original issue discount upon a sale or exchange of the obligation or when a payment is made on such obligation. The amount taxable is the amount of original issue discount that accrued while the foreign person held the obligation up to the time that the obligation is sold or exchanged or that a payment is made on the obligation, reduced by any amount of original issue discount that was taken into account prior to that time (due to a payment made on the obligation). In the case of a payment made on the obligation, the tax due on the amount of original issue discount may not exceed the amount of the payment reduced by the tax imposed on any portion of the payment that is qualified stated interest.

(ii) *Amounts subject to withholding.* A withholding agent must withhold on the taxable amount of original issue discount paid on the redemption of an original issue discount obligation unless an exception to withholding applies (e.g., portfolio interest or treaty exception). In addition, withholding is required on the taxable amount of original issue discount upon the sale or exchange of an original issue discount obligation, other than in a redemption, to the extent the withholding agent has actual knowledge or reason to know that the sale or exchange is part of a plan the principal purpose of which

is to avoid tax. If a withholding agent cannot determine the taxable amount of original issue discount on the redemption of an original issue discount obligation (or on the sale or exchange of such an obligation if the principal purpose of the sale is to avoid tax), then it must withhold on the entire amount of original issue discount accrued from the date of issue until the date of redemption (or the date the obligation is sold or exchanged) determined on the basis of the most recently published ''List of Original Issue Discount Instruments'' (IRS Publication 1212, available from the IRS Forms Distribution Center) or similar list published by the IRS as if the beneficial owner of the obligation had held the obligation since its original issue.

(iii) *Exceptions to withholding*. To the extent that this paragraph (b)(3) applies to require withholding by a person other than an issuer of an original issue discount obligation, or the issuer's agent, it shall apply only to obligations issued after December 31, 2000.

(4) *Securities lending transactions and equivalent transactions*. See §§1.871–7(b)(2) and 1.881–2(b)(2) regarding the character of substitute payments as fixed and determinable annual or periodical income. Such amounts constitute income subject to withholding to the extent they are from sources within the United States, as determined under section §§1.861–2(a)(7) and 1.861–3(a)(6). See §§1.6042–3(a)(2) and 1.6049–5(a)(5) for reporting requirements applicable to substitute dividend and interest payments, respectively.

(c) *Other income subject to withholding*. Withholding is also required on the following items of income—

(1) Gains described in sections 631 (b) or (c), relating to treatment of gain on disposal of timber, coal, or domestic iron ore with a retained economic interest; and

(2) Gains subject to the 30-percent tax under section 871(a)(1)(D) or 881(a)(4), relating to contingent payments received from the sale or exchange of patents, copyrights, and similar intangible property.

(d) *Exceptions to withholding where no money or property is paid or lack of knowledge*—(1) *General rule*. A withholding agent who is not related to the recipient or beneficial owner has an obligation to withhold under section 1441 only to the extent that, at any time between the date that the obligation to withhold would arise (but for the provisions of this paragraph (d)) and the due date for the filing of return on Form 1042 (including extensions) for the year in which the payment occurs, it has control over, or custody of money or property owned by the recipient or beneficial owner from which to withhold an amount and has knowledge of the facts that give rise to the payment. The exemption from the obligation to withhold under this paragraph (d) shall not apply, however, to distributions with respect to stock or if the lack of control or custody of money or property from which to withhold is part of a pre-arranged plan known to the withholding agent to avoid withholding under section 1441, 1442, or 1443. For purposes of this paragraph (d), a withholding agent is related to the recipient or beneficial owner if it is related within the meaning of section 482. Any exemption from withholding pursuant to this paragraph (d) applies without a requirement that documentation be furnished to the withholding agent. However, documentation may have to be furnished for purposes of the information reporting provisions under chapter 61 of the Code and backup withholding under section 3406. The exemption from withholding under this paragraph (d) is not a determination that the amounts are not fixed or determinable annual or periodical income, nor does it constitute an exemption from reporting the amount under §1.1461–1 (b) and (c).

(2) *Cancellation of debt*. A lender of funds who forgives any portion of the loan is deemed to have made a payment of income to the borrower under §1.61–12 at the time the event of forgiveness occurs. However, based on the rules of paragraph (d)(1) of this section, the lender shall have no obligation to withhold on such amount to the extent that it does not have custody or control over money or property of the borrower at any time between the time that the loan is forgiven and the due date (including extensions) of the Form 1042 for the year in which the payment

is deemed to occur. A payment received by the lender from the borrower in partial settlement of the debt obligation does not, for this purpose, constitute an amount of money or property belonging to the borrower from which the withholding tax liability can be satisfied.

(3) *Satisfaction of liability following underwithholding by withholding agent.* A withholding agent who, after failing to withhold the proper amount from a payment, satisfies the underwithheld amount out of its own funds may cause the beneficial owner to realize income to the extent of such satisfaction or may be considered to have advanced funds to the beneficial owner. Such determination depends upon the contractual arrangements governing the satisfaction of such tax liability (e.g., arrangements in which the withholding agent agrees to pay the amount due under section 1441 for the beneficial owner) or applicable laws governing the transaction. If the satisfaction of the tax liability is considered to constitute an advance of funds by the withholding agent to the beneficial owner and the withholding agent fails to collect the amount from the beneficial owner, a cancellation of indebtedness may result, giving rise to income to the beneficial owner under §1.61–12. While such income is annual or periodical fixed or determinable, the withholding agent shall have no liability to withhold on such income to the extent the conditions set forth in paragraphs (d) (1) and (2) of this section are satisfied with respect to this income. Contrast the rules of this paragraph (d)(3) with the rules in §1.1441–3(f)(1) dealing with a situation in which the satisfaction of the beneficial owner's tax liability itself constitutes additional income to the beneficial owner. See, also, §1.1441–3(c)(2)(ii)(B) for a special rule regarding underwithholding on corporate distributions due to underestimating an amount of earnings and profits.

(e) *Payment*—(1) *General rule.* A payment is considered made to a person if that person realizes income whether or not such income results from an actual transfer of cash or other property. For example, realization of income from cancellation of debt results in a deemed payment. A payment is considered made when the amount would be includible in the income of the beneficial owner under the U.S. tax principles governing the cash basis method of accounting. A payment is considered made whether it is made directly to the beneficial owner or to another person for the benefit of the beneficial owner (e.g., to the agent of the beneficial owner). Thus, a payment of income is considered made to a beneficial owner if it is paid in complete or partial satisfaction of the beneficial owner's debt to a creditor. In the event of a conflict between the rules of this paragraph (e)(1) governing whether a payment has occurred and its timing and the rules of §31.3406(a)–4 of this chapter, the rules in §31.3406(a)–4 of this chapter shall apply to the extent that the application of section 3406 is relevant to the transaction at issue.

(2) *Income allocated under section 482.* A payment is considered made to the extent income subject to withholding is allocated under section 482. Further, income arising as a result of a secondary adjustment made in conjunction with a reallocation of income under section 482 from a foreign person to a related U.S. person is considered paid to a foreign person unless the taxpayer to whom the income is reallocated has entered into a repatriation agreement with the IRS and the agreement eliminates the liability for withholding under this section. For purposes of determining the liability for withholding, the payment of income is deemed to have occurred on the last day of the taxable year in which the transactions that give rise to the allocation of income and the secondary adjustments, if any, took place.

(3) *Blocked income.* Income is not considered paid if it is blocked under executive authority, such as the President's exercise of emergency power under the Trading with the Enemy Act (50 U.S.C. App. 5), or the International Emergency Economic Powers Act (50 U.S.C. 1701 et seq). However, on the date that the blocking restrictions are removed, the income that was blocked is considered constructively received by the beneficial owner (and therefore paid for purposes of this section) and subject to withholding under §1.1441–1.

Any exemption from withholding pursuant to this paragraph (e)(3) applies without a requirement that documentation be furnished to the withholding agent. However, documentation may have to be furnished for purposes of the information reporting provisions under chapter 61 of the Code and backup withholding under section 3406. The exemption from withholding granted by this paragraph (e)(3) is not a determination that the amounts are not fixed or determinable annual or periodical income.

(4) *Special rules for dividends.* For purposes of sections 1441 and 6042, in the case of stock for which the record date is earlier than the payment date, dividends are considered paid on the payment date. In the case of a corporate reorganization, if a beneficial owner is required to exchange stock held in a former corporation for stock in a new corporation before dividends that are to be paid with respect to the stock in the new corporation will be paid on such stock, the dividend is considered paid on the date that the payee or beneficial owner actually exchanges the stock and receives the dividend. See § 31.3406(a)–4(a)(2) of this chapter.

(5) *Certain interest accrued by a foreign corporation.* For purposes of sections 1441 and 6049, a foreign corporation shall be treated as having made a payment of interest as of the last day of the taxable year if it has made an election under § 1.884–4(c)(1) to treat accrued interest as if it were paid in that taxable year.

(6) *Payments other than in U.S. dollars.* For purposes of section 1441, a payment includes amounts paid in a medium other than U.S. dollars. See § 1.1441–3(e) for rules regarding the amount subject to withholding in the case of such payments.

(f) *Effective date.* This section applies to payments made after December 31, 2000.

[T.D. 8734, 62 FR 53444, Oct. 14, 1997, as amended by T.D. 8804, 63 FR 72187, Dec. 31, 1998; T.D. 8856, 64 FR 73412, Dec. 30, 1999; T.D. 8881, 65 FR 32186, May 22, 2000]

§ 1.1441–3 Determination of amounts to be withheld.

(a) *Withholding on gross amount.* Except as otherwise provided in regulations under section 1441, the amount subject to withholding under § 1.1441–1 is the gross amount of income subject to withholding that is paid to a foreign person. The gross amount of income subject to withholding may not be reduced by any deductions, except to the extent that one or more personal exemptions are allowed as provided under § 1.1441–4(b)(6).

(b) *Withholding on payments on certain obligations*—(1) *Withholding at time of payment of interest.* When making a payment on an interest-bearing obligation, a withholding agent must withhold under § 1.1441–1 upon the gross amount of stated interest payable on the interest payment date, regardless of whether the payment constitutes a return of capital or the payment of income within the meaning of section 61. To the extent an amount was withheld on an amount of capital rather than interest, see the rules for adjustments, refunds, or credits under § 1.1441–1(b)(8).

(2) *No withholding between interest payment dates*—(i) *In general.* A withholding agent is not required to withhold under § 1.1441–1 upon interest accrued on the date of a sale or exchange of a debt obligation when that sale occurs between two interest payment dates (even though the amount is treated as interest under § 1.61–7(c) or (d) and is subject to tax under section 871 or 881). See § 1.6045–1(c) for reporting requirements by brokers with respect to sale proceeds. See § 1.61–7(c) regarding the character of payments received by the acquirer of an obligation subsequent to such acquisition (that is, as a return of capital or interest accrued after the acquisition). Any exemption from withholding pursuant to this paragraph (b)(2)(i) applies without a requirement that documentation be furnished to the withholding agent. However, documentation may have to be furnished for purposes of the information reporting provisions under section 6045 or 6049 and backup withholding under section 3406. The exemption from withholding granted by this paragraph (b)(2) is not a determination that the accrued interest is not fixed or determinable annual or periodical income under section 871(a) or 881(a).

(ii) *Anti-abuse rule.* The exemption in paragraph (b)(2)(i) of this section does

not apply if the sale of securities is part of a plan the principal purpose of which is to avoid tax by selling and repurchasing securities and the withholding agent has actual knowledge or reason to know of such plan.

(c) *Corporate distributions*—(1) *General rule*. A corporation making a distribution with respect to its stock or any intermediary (described in §1.1441–1(c)(13)) making a payment of such a distribution is required to withhold under section 1441, 1442, or 1443 on the entire amount of the distribution, unless it elects to reduce the amount of withholding under the provisions of this paragraph (c). Any exceptions from withholding provided by this paragraph (c) apply without any requirement to furnish documentation to the withholding agent. However, documentation may have to be furnished for purposes of the information reporting provisions under section 6042 or 6045 and backup withholding under section 3406. See §1.1461–1(c) to determine whether amounts excepted from withholding under this section are considered amounts that are subject to reporting.

(2) *Exception to withholding on distributions*—(i) *In general*. An election described in paragraph (c)(1) of this section is made by actually reducing the amount of withholding at the time that the payment is made. An intermediary that makes a payment of a distribution is not required to reduce the withholding based on the distributing corporation's estimates under this paragraph (c)(2) even if the distributing corporation itself elects to reduce the withholding on payments of distributions that it itself makes to foreign persons. Conversely, an intermediary may elect to reduce the amount of withholding with respect to the payment of a distribution even if the distributing corporation does not so elect for the payments of distributions that it itself makes of distributions to foreign persons. The amounts with respect to which a distributing corporation or intermediary may elect to reduce the withholding are as follows:

(A) A distributing corporation or intermediary may elect to not withhold on a distribution to the extent it represents a nontaxable distribution payable in stock or stock rights.

(B) A distributing corporation or intermediary may elect to not withhold on a distribution to the extent it represents a distribution in part or full payment in exchange for stock.

(C) A distributing corporation or intermediary may elect to not withhold on a distribution (actual or deemed) to the extent it is not paid out of accumulated earnings and profits or current earnings and profits, based on a reasonable estimate determined under paragraph (c)(2)(ii) of this section.

(D) A regulated investment company or intermediary may elect to not withhold on a distribution representing a capital gain dividend (as defined in section 852(b)(3)(C)) or an exempt interest dividend (as defined in section 852(b)(5)(A)) based on the applicable procedures described under paragraph (c)(3) of this section.

(E) A U.S. Real Property Holding Corporation (defined in section 897(c)(2)) or a real estate investment trust (defined in section 856) or intermediary may elect to not withhold on a distribution to the extent it is subject to withholding under section 1445 and the regulations under that section. See paragraph (c)(4) of this section for applicable procedures.

(ii) *Reasonable estimate of accumulated and current earnings and profits on the date of payment*—(A) *General rule*. A reasonable estimate for purposes of paragraph (c)(2)(i)(C) of this section is a determination made by the distributing corporation at a time reasonably close to the date of payment of the extent to which the distribution will constitute a dividend, as defined in section 316. The determination is based upon the anticipated amount of accumulated earnings and profits and current earnings and profits for the taxable year in which the distribution is made, the distributions made prior to the distribution for which the estimate is made and all other relevant facts and circumstances. A reasonable estimate may be made based on the procedures described in §31.3406(b)(2)–4(c)(2) of this chapter.

(B) *Procedures in case of underwithholding*. A distributing corporation or intermediary that is a withholding

agent with respect to a distribution and that determines at the end of the taxable year in which the distribution is made that it underwithheld under section 1441 on the distribution shall be liable for the amount underwithheld as a withholding agent under section 1461. However, for purposes of this section and § 1.1461–1, any amount underwithheld paid by a distributing corporation, its paying agent, or an intermediary shall not be treated as income subject to additional withholding even if that amount is treated as additional income to the shareholders unless the additional amount is income to the shareholder as a result of a contractual arrangement between the parties regarding the satisfaction of the shareholder's tax liabilities. In addition, no penalties shall be imposed for failure to withhold and deposit the tax if—

(*1*) The distributing corporation made a reasonable estimate as provided in paragraph (c)(2)(ii)(A) of this section; and

(*2*) Either—

(*i*) The corporation or intermediary pays over the underwithheld amount on or before the due date for filing a Form 1042 for the calendar year in which the distribution is made, pursuant to § 1.1461–2(b); or

(*ii*) The corporation or intermediary is not a calendar year taxpayer and it files an amended return on Form 1042X (or such other form as the Commissioner may prescribe) for the calendar year in which the distribution is made and pays the underwithheld amount and interest within 60 days after the close of the taxable year in which the distribution is made.

(C) *Reliance by intermediary on reasonable estimate.* For purposes of determining whether the payment of a corporate distribution is a dividend, a withholding agent that is not the distributing corporation may, absent actual knowledge or reason to know otherwise, rely on representations made by the distributing corporation regarding the reasonable estimate of the anticipated accumulated and current earnings and profits made in accordance with paragraph (c)(2)(ii)(A) of this section. Failure by the withholding agent to withhold the required amount due to a failure by the distributing corporation to reasonably estimate the portion of the distribution treated as a dividend or to properly communicate the information to the withholding agent shall be imputed to the distributing corporation. In such a case, the Internal Revenue Service (IRS) may collect from the distributing corporation any underwithheld amount and subject the distributing corporation to applicable interest and penalties as a withholding agent.

(D) *Example.* The rules of this paragraph (c)(2) are illustrated by the following example:

Example. (i) *Facts.* Corporation X, a publicly traded corporation with both U.S. and foreign shareholders and a calendar year taxpayer, has an accumulated deficit in earnings and profits at the close of 2000. In 2001, Corporation X generates $1 million of current earnings and profits each month and makes an $18 million distribution, resulting in a $12 million dividend. Corporation X plans to make an additional $18 million distribution on October 1, 2002. Approximately one month before that date, Corporation X's management receives an internal report from its legal and accounting department concerning Corporation X's estimated current earnings and profits. The report states that Corporation X should generate only $5.1 million of current earnings and profits by the close of the third quarter due to costs relating to substantial organizational and product changes, but these changes will enable Corporation X to generate $1.3 million of earnings and profits monthly for the last quarter of the 2002 fiscal year. Thus, the total amount of current and earnings and profits for 2002 is estimated to be $9 million.

(ii) *Analysis.* Based on the facts in paragraph (i) of this *Example,* including the fact that earnings and profits estimate was made within a reasonable time before the distribution, Corporation X can rely on the estimate under paragraph (c)(2)(ii)(A) of this section. Therefore, Corporation X may treat $9 million of the $18 million of the October 1, 2002, distribution to foreign shareholders as a nondividend distribution.

(3) *Special rules in the case of distributions from a regulated investment company*—(i) *General rule.* If the amount of any distributions designated as being subject to section 852(b)(3)(C) or (5)(A) exceeds the amount that may be designated under those sections for the taxable year, then no penalties will be asserted for any resulting underwithholding if the designations were based

on a reasonable estimate (made pursuant to the same procedures as are described in paragraph (c)(2)(ii)(A) of this section) and the adjustments to the amount withheld are made within the time period described in paragraph (c)(2)(ii)(B) of this section. Any adjustment to the amount of tax due and paid to the IRS by the withholding agent as a result of underwithholding shall not be treated as a distribution for purposes of section 562(c) and the regulations thereunder. Any amount of U.S. tax that a foreign shareholder is treated as having paid on the undistributed capital gain of a regulated investment company under section 852(b)(3)(D) may be claimed by the foreign shareholder as a credit or refund under § 1.1464–1.

(ii) *Reliance by intermediary on reasonable estimate.* For purposes of determining whether a payment is a distribution designated as subject to section 852(b) (3)(C) or (5)(A), a withholding agent that is not the distributing regulated investment company may, absent actual knowledge or reason to know otherwise, rely on the designations that the distributing company represents have been made in accordance with paragraph (c)(3)(i) of this section. Failure by the withholding agent to withhold the required amount due to a failure by the regulated investment company to reasonably estimate the required amounts or to properly communicate the relevant information to the withholding agent shall be imputed to the distributing company. In such a case, the IRS may collect from the distributing company any underwithheld amount and subject the company to applicable interest and penalties as a withholding agent.

(4) *Coordination with withholding under section 1445*—(i) *In general.* A distribution from a U.S. Real Property Holding Corporation (USRPHC) (or from a corporation that was a USRPHC at any time during the five-year period ending on the date of distribution) with respect to stock that is a U.S. real property interest under section 897(c) or from a Real Estate Investment Trust (REIT) with respect to its stock is subject to the withholding provisions under section 1441 (or section 1442 or 1443) and section 1445. A USRPHC making a distribution shall be treated as satisfying its withholding obligations under both sections if it withholds in accordance with one of the procedures described in either paragraph (c)(4)(i)(A) or (B) of this section. A USRPHC must apply the same withholding procedure to all the distributions made during the taxable year. However, the USRPHC may change the applicable withholding procedure from year to year. For rules regarding distributions by REITs, see paragraph (c)(4)(i)(C) of this section.

(A) *Withholding under section 1441.* The USRPHC may choose to withhold on a distribution only under section 1441 (or 1442 or 1443) and not under section 1445. In such a case, the USRPHC must withhold under section 1441 (or 1442 or 1443) on the full amount of the distribution, whether or not any portion of the distribution represents a return of basis or capital gain. If a reduced tax rate under an income tax treaty applies to the distribution by the USRPHC, then the applicable rate of withholding on the distribution shall be no less than 10-percent, unless the applicable treaty specifies an applicable lower rate for distributions from a USRPHC, in which case the lower rate may apply.

(B) *Withholding under both sections 1441 and 1445.* As an alternative to the procedure described in paragraph (c)(4)(i)(A) of this section, a USRPHC may choose to withhold under both sections 1441 (or 1442 or 1443) and 1445 under the procedures set forth in this paragraph (c)(4)(i)(B). The USRPHC must make a reasonable estimate of the portion of the distribution that is a dividend under paragraph (c)(2)(ii)(A) of this section, and must—

(*1*) Withhold under section 1441 (or 1442 or 1443) on the portion of the distribution that is estimated to be a dividend under paragraph (c)(2)(ii)(A) of this section; and

(*2*) Withhold under section 1445(e)(3) and § 1.1445–5(e) on the remainder of the distribution or on such smaller portion based on a withholding certificate obtained in accordance with § 1.1445–5(e)(2)(iv).

(C) *Coordination with REIT withholding.* Withholding is required under

section 1441 (or 1442 or 1443) on the portion of a distribution from a REIT that is not designated as a capital gain dividend, a return of basis, or a distribution in excess of a shareholder's adjusted basis in the stock of the REIT that is treated as a capital gain under section 301(c)(3). A distribution in excess of a shareholder's adjusted basis in the stock of the REIT is, however, subject to withholding under section 1445, unless the interest in the REIT is not a U.S. real property interest (e.g., an interest in a domestically controlled REIT under section 897(h)(2)). In addition, withholding is required under section 1445 on the portion of the distribution designated by a REIT as a capital gain dividend. See §1.1445–8.

(ii) *Intermediary reliance rule.* A withholding agent that is not the distributing USRPHC must withhold under paragraph (c)(4)(i) of this section, but may, absent actual knowledge or reason to know otherwise, rely on representations made by the USRPHC regarding the determinations required under paragraph (c)(4)(i) of this section. Failure by the withholding agent to withhold the required amount due to a failure by the distributing USRPHC to make these determinations in a reasonable manner or to properly communicate the determinations to the withholding agent shall be imputed to the distributing USRPHC. In such a case, the IRS may collect from the distributing USRPHC any underwithheld amount and subject the distributing USRPHC to applicable interest and penalties as a withholding agent.

(d) *Withholding on payments that include an undetermined amount of income*—(1) *In general.* Where the withholding agent makes a payment and does not know at the time of payment the amount that is subject to withholding because the determination of the source of the income or the calculation of the amount of income subject to tax depends upon facts that are not known at the time of payment, then the withholding agent must withhold an amount under §1.1441–1 based on the entire amount paid that is necessary to assure that the tax withheld is not less than 30 percent (or other applicable percentage) of the amount that will subsequently be determined to be from sources within the United States or to be income subject to tax. The amount so withheld shall not exceed 30 percent of the amount paid. In the alternative, the withholding agent may make a reasonable estimate of the amount from U.S. sources or of the taxable amount and set aside a corresponding portion of the amount due under the transaction and hold such portion in escrow until the amount from U.S. sources or the taxable amount can be determined, at which point withholding becomes due under §1.1441–1. See §1.1441–1(b)(8) regarding adjustments in the case of overwithholding. The provisions of this paragraph (d)(1) shall not apply to the extent that other provisions of the regulations under chapter 3 of the Internal Revenue Code (Code) specify the amount to be withheld, if any, when the withholding agent lacks knowledge at the time of payment (e.g., lack of reliable knowledge regarding the status of the payee or beneficial owner, addressed in §1.1441–1(b)(3), or lack of knowledge regarding the amount of original issue discount under §1.1441–2(b)(3)).

(2) *Withholding on certain gains.* Absent actual knowledge or reason to know otherwise, a withholding agent may rely on a claim regarding the amount of gain described in §1.1441–2(c) if the beneficial owner withholding certificate, or other appropriate withholding certificate, states the beneficial owner's basis in the property giving rise to the gain. In the absence of a reliable representation on a withholding certificate, the withholding agent must withhold an amount under §1.1441–1 that is necessary to assure that the tax withheld is not less than 30 percent (or other applicable percentage) of the recognized gain. For this purpose, the recognized gain is determined without regard to any deduction allowed by the Code from the gains. The amount so withheld shall not exceed 30 percent of the amount payable by reason of the transaction giving rise to the recognized gain. See §1.1441–1(b)(8) regarding adjustments in the case of overwithholding.

(e) *Payments other than in U.S. dollars*—(1) *In general.* The amount of a payment made in a medium other than

U.S. dollars is measured by the fair market value of the property or services provided in lieu of U.S. dollars. The withholding agent may liquidate the property prior to payment in order to withhold the required amount of tax under section 1441 or obtain payment of the tax from an alternative source. However, the obligation to withhold under section 1441 is not deferred even if no alternative source can be located. Thus, for purposes of withholding under chapter 3 of the Code, the provisions of §31.3406(h)–2(b)(2)(ii) of this chapter (relating to backup withholding from another source) shall not apply. If the withholding agent satisfies the tax liability related to such payments, the rules of paragraph (f) of this section apply.

(2) *Payments in foreign currency*. If the amount subject to withholding tax is paid in a currency other than the U.S. dollar, the amount of withholding under section 1441 shall be determined by applying the applicable rate of withholding to the foreign currency amount and converting the amount withheld into U.S. dollars on the date of payment at the spot rate (as defined in §1.988–1(d)(1)) in effect on that date. A withholding agent making regular or frequent payments in foreign currency may use a month-end spot rate or a monthly average spot rate. A spot rate convention must be used consistently for all non-dollar amounts withheld and from year to year. Such convention cannot be changed without the consent of the Commissioner. The U.S. dollar amount so determined shall be treated by the beneficial owner as the amount of tax paid on the income for purposes of determining the final U.S. tax liability and, if applicable, claiming a refund or credit of tax.

(f) *Tax liability of beneficial owner satisfied by withholding agent*—(1) *General rule*. In the event that the satisfaction of a tax liability of a beneficial owner by a withholding agent constitutes income to the beneficial owner and such income is of a type that is subject to withholding, the amount of the payment deemed made by the withholding agent for purposes of this paragraph (f) shall be determined under the gross-up formula provided in this paragraph (f)(1). Whether the payment of the tax by the withholding agent constitutes a satisfaction of the beneficial owner's tax liability and whether, as such, it constitutes additional income to the beneficial owner, must be determined under all the facts and circumstances surrounding the transaction, including any agreements between the parties and applicable law. The formula described in this paragraph (f)(1) is as follows:

$$\text{Payment} = \frac{\text{Gross payment without withholding}}{1\text{-(tax rate)}}$$

(2) *Example*. The following example illustrates the provisions of this paragraph (f):

Example. College X awards a qualified scholarship within the meaning of section 117(b) to foreign student, FS, who is in the United States on an F visa. FS is a resident of a country that does not have an income tax treaty with the United States. The scholarship is $20,000 to be applied to tuition, mandatory fees and books, plus benefits in kind consisting of room and board and roundtrip air transportation. College X agrees to pay any U.S. income tax owed by FS with respect to the scholarship. The fair market value of the room and board measured by the amount College X charges nonscholarship students is $6,000. The cost of the roundtrip air transportation is $2,600. Therefore, the total fair market value of the scholarship received by FS is $28,600. However, the amount taxable is limited to the fair market value of the benefits in kind ($8,600) because the portion of the scholarship amount for tuition, fees, and books is not included in gross income under section 117. The applicable rate of withholding is 14 percent under section 1441(b). Therefore, under the gross-up formula, College X is deemed to make a payment of $10,000 ($8,600 divided by (1–.14). The U.S. tax that must be deducted and withheld from the payment under section 1441(b) is $1,400 (.14×$10,000). College X reports scholarship income of $30,000 and $1,400 of U.S. tax withheld on Forms 1042 and 1042–S.

(g) *Conduit financing arrangements*—(1) *Duty to withhold*. A financed entity or other person required to withhold tax under section 1441 with respect to a financing arrangement that is a conduit financing arrangement within the meaning of §1.881–3(a)(2)(iv) shall be required to withhold under section 1441 as if the district director had determined, pursuant to §1.881–3(a)(3), that all conduit entities that are parties to the conduit financing arrangement

should be disregarded. The amount of tax required to be withheld shall be determined under §1.881–3(d). The withholding agent may withhold tax at a reduced rate if the financing entity establishes that it is entitled to the benefit of a treaty that provides a reduced rate of tax on a payment of the type deemed to have been paid to the financing entity. Section 1.881–3(a)(3)(ii)(E) shall not apply for purposes of determining whether any person is required to deduct and withhold tax pursuant to this paragraph (g), or whether any party to a financing arrangement is liable for failure to withhold or entitled to a refund of tax under sections 1441 or 1461 to 1464 (except to the extent the amount withheld exceeds the tax liability determined under §1.881–3(d)). See §1.1441–7(f) relating to withholding tax liability of the withholding agent in conduit financing arrangements subject to §1.881–3.

(2) *Effective date.* This paragraph (g) is effective for payments made by financed entities on or after September 11, 1995. This paragraph shall not apply to interest payments covered by section 127(g)(3) of the Tax Reform Act of 1984, and to interest payments with respect to other debt obligations issued prior to October 15, 1984 (whether or not such debt was issued by a Netherlands Antilles corporation).

(h) *Effective date.* Except as otherwise provided in paragraph (g) of this section, this section applies to payments made after December 31, 2000.

[T.D. 6500, 25 FR 12074, Nov. 26, 1960, as amended by T.D. 6908, 31 FR 16771, Dec. 31, 1966; T.D. 7378, 40 FR 45436, Oct. 2, 1975; T.D. 7977, 49 FR 36831, Sept. 20, 1984; T.D. 8611, 60 FR 41014, Aug. 11, 1995; T.D. 8734, 62 FR 53446, Oct. 14, 1997; T.D. 8804, 63 FR 72187, Dec. 31, 1998; T.D. 8856, 64 FR 73412, Dec. 30, 1999; T.D. 8881, 65 FR 32187, 32212, May 22, 2000]

§1.1441–4 Exemptions from withholding for certain effectively connected income and other amounts.

(a) *Certain income connected with a U.S. trade or business*—(1) *In general.* No withholding is required under section 1441 on income otherwise subject to withholding if the income is (or is deemed to be) effectively connected with the conduct of a trade or business within the United States and is includible in the beneficial owner's gross income for the taxable year. For purposes of this paragraph (a), an amount is not deemed to be includible in gross income if the amount is (or is deemed to be) effectively connected with the conduct of a trade or business within the United States and the beneficial owner claims an exemption from tax under an income tax treaty because the income is not attributable to a permanent establishment in the United States. To claim a reduced rate of withholding because the income is not attributable to a permanent establishment, see §1.1441–6(b)(1). This paragraph (a) does not apply to income of a foreign corporation to which section 543(a)(7) applies for the taxable year or to compensation for personal services performed by an individual. See paragraph (b) of this section for compensation for personal services performed by an individual.

(2) *Withholding agent's reliance on a claim of effectively connected income*—(i) *In general.* Absent actual knowledge or reason to know otherwise, a withholding agent may rely on a claim of exemption based upon paragraph (a)(1) of this section if, prior to the payment to the foreign person, the withholding agent can reliably associate the payment with a Form W–8 upon which it can rely to treat the payment as made to a foreign beneficial owner in accordance with §1.1441–1(e)(1)(ii). For purposes of this paragraph (a), a withholding certificate is valid only if, in addition to other applicable requirements, it includes the taxpayer identifying number of the person whose name is on the Form W–8 and represents, under penalties of perjury, that the amounts for which the certificate is furnished are effectively connected with the conduct of a trade or business in the United States and is includable in the beneficial owner's gross income for the taxable year. In the absence of a reliable claim that the income is effectively connected with the conduct of a trade or business in the United States, the income is presumed not to be effectively connected, except as otherwise provided in paragraph (a) (2)(ii) or (3) of this section. See §1.1441–1(e)(4)(ii)(C) for the period of validity applicable to a certificate provided under this section and §1.1441–

1(e)(4)(ii)(D) for changes in circumstances arising during the taxable year indicating that the income to which the certificate relates is not, or is no longer expected to be, effectively connected with the conduct of a trade or business within the United States. A withholding certificate shall be effective only for the item or items of income specified therein. The provisions of §1.1441–1(b)(3)(iv) dealing with a 90-day grace period shall apply for purposes of this section.

(ii) *Special rules for U.S. branches of foreign persons*—(A) *U.S. branches of certain foreign banks or foreign insurance companies.* A payment to a U.S. branch described in §1.1441–1(b)(2)(iv)(A) is presumed to be effectively connected with the conduct of a trade or business in the United States without the need to furnish a certificate, unless the U.S. branch provides a U.S. branch withholding certificate described in §1.1441–1(e)(3)(v) that represents otherwise. If no certificate is furnished but the income is not, in fact, effectively connected income, then the branch must withhold whether the payment is collected on behalf of other persons or on behalf of another branch of the same entity. See §1.1441–1(b) (2)(iv) and (6) for general rules applicable to payments to U.S. branches of foreign persons.

(B) *Other U.S. branches.* See §1.1441–1(b)(2)(iv)(E) for similar procedures for other U.S. branches to the extent provided in a determination letter from the district director or the Assistant Commissioner (International).

(3) *Income on notional principal contracts*—(i) *General rule.* A withholding agent that pays amounts attributable to a notional principal contract described in §1.863–7(a) or 1.988–2(e) shall have no obligation to withhold on the amounts paid under the terms of the notional principal contract regardless of whether a withholding certificate is provided. However, a withholding agent must file returns under §1.1461–1(b) and (c) reporting the income that it must treat as effectively connected with the conduct of a trade or business in the United States under the provisions of this paragraph (a)(3). Except as otherwise provided in paragraph (a)(3)(ii) of this section, a withholding agent must treat the income as effectively connected with the conduct of a U.S. trade or business if the income is paid to, or to the account of, a qualified business unit of a foreign person located in the United States or, if the payment is paid to, or to the account of, a qualified business unit of a foreign person located outside the United States, the withholding agent knows, or has reason to know, the payment is effectively connected with the conduct of a trade or business within the United States. Income on a notional principal contract does not include the amount characterized as interest under the provisions of §1.446–3(g)(4).

(ii) *Exception for certain payments.* A payment shall not be treated as effectively connected with the conduct of a trade or business within the United States for purposes of paragraph (a)(3)(i) of this section even if no withholding certificate is furnished if the payee provides a representation in a master agreement that governs the transactions in notional principal contracts between the parties (for example an International Swaps and Derivatives Association (ISDA) Agreement, including the Schedule thereto) or in the confirmation on the particular notional principal contract transaction that the payee is a U.S. person or a non-U.S. branch of a foreign person.

(b) *Compensation for personal services of an individual*—(1) *Exemption from withholding.* Withholding is not required under §1.1441–1 from salaries, wages, remuneration, or any other compensation for personal services of a nonresident alien individual if such compensation is effectively connected with the conduct of a trade or business within the United States and—

(i) Such compensation is subject to withholding under section 3402 (relating to withholding on wages) and the regulations under that section;

(ii) Such compensation would be subject to withholding under section 3402 but for the provisions of section 3401(a) (not including section 3401(a)(6)) and the regulations under that section. This paragraph (b)(1)(ii) does not apply to payments to a nonresident alien individual from any trust described in section 401(a), any annuity plan described in section 403(a), any annuity,

custodial account, or retirement income account described in section 403(b), or an individual retirement account or individual retirement annuity described in section 408. Instead, these payments are subject to withholding under this section to the extent they are exempted from the definition of wages under section 3401(a)(12) or to the extent they are from an annuity, custodial account, or retirement income account described in section 403(b), or an individual retirement account or individual retirement annuity described in section 408. Thus, for example, payments to a nonresident alien individual from a trust described in section 401(a) are subject to withholding under section 1441 and not under section 3405 or section 3406.

(iii) Such compensation is for services performed by a nonresident alien individual who is a resident of Canada or Mexico and who enters and leaves the United States at frequent intervals;

(iv) Such compensation is, or will be, exempt from the income tax imposed by chapter 1 of the Code by reason of a provision of the Internal Revenue Code or a tax treaty to which the United States is a party;

(v) Such compensation is paid after January 3, 1979 as a commission or rebate paid by a ship supplier to a nonresident alien individual, who is employed by a nonresident alien individual, foreign partnership, or foreign corporation in the operation of a ship or ships of foreign registry, for placing orders for supplies to be used in the operation of such ship or ships with the supplier. See section 162(c) and the regulations thereunder for denial of deductions for illegal bribes, kickbacks, and other payments; or

(vi) Compensation that is exempt from withholding under section 3402 by reason of section 3402(e), provided that the employee and his employer enter into an agreement under section 3402(p) to provide for the withholding of income tax upon payments of amounts described in §31.3401(a)–3(b)(1) of this chapter. An employee who desires to enter into such an agreement should furnish his employer with Form W–4 (withholding exemption certificate) (or such other form as the Internal Revenue Service (IRS) may prescribe). See section 3402(f) and the regulations thereunder and §31.3402(p)-1 of this chapter.

(2) *Manner of obtaining withholding exemption under tax treaty*—(i) *In general.* In order to obtain the exemption from withholding by reason of a tax treaty, provided by paragraph (b)(1)(iv) of this section, a nonresident alien individual must submit a withholding certificate (described in paragraph (b)(2)(ii) of this section) to each withholding agent from whom amounts are to be received. A separate withholding certificate must be filed for each taxable year of the alien individual. If the withholding agent is satisfied that an exemption from withholding is warranted (see paragraph (b)(2)(iii) of this section), the withholding certificate shall be accepted in the manner set forth in paragraph (b)(2)(iv) of this section. The exemption from withholding becomes effective for payments made at least ten days after a copy of the accepted withholding certificate is forwarded to the Assistant Commissioner (International). The withholding agent may rely on an accepted withholding certificate only if the IRS has not objected to the certificate. For purposes of this paragraph (b)(2)(i), the IRS will be considered to have not objected to the certificate if it has not notified the withholding agent within a 10-day period beginning from the date that the withholding certificate is forwarded to the IRS pursuant to paragraph (b)(2)(v) of this section. After expiration of the 10-day period, the withholding agent may rely on the withholding certificate retroactive to the date of the first payment covered by the certificate. The fact that the IRS does not object to the withholding certificate within the 10-day period provided in this paragraph (b)(2)(i) shall not preclude the IRS from examining the withholding agent at a later date in light of facts that the withholding agent knew or had reason to know regarding the payment and eligibility for a reduced rate and that were not disclosed to the IRS as part of the 10-day review process.

(ii) *Withholding certificate claiming withholding exemption.* The statement claiming an exemption from withholding shall be made on Form 8233 (or

an acceptable substitute or such other form as the IRS may prescribe). Form 8233 shall be dated, signed by the beneficial owner under penalties of perjury, and contain the following information—

(A) The individual's name, permanent residence address, taxpayer identifying number (or a copy of a completed Form W–7 or SS–5 showing that a number has been applied for), and the U.S. visa number, if any;

(B) The individual's current immigration status and visa type;

(C) The individual's original date of entry into the United States;

(D) The country that issued the individual's passport and the number of such passport, or the individual's permanent address if a citizen of Canada or Mexico;

(E) The taxable year for which the statement is to apply, the compensation to which it relates, and the amount (or estimated amount if exact amount not known) of such compensation;

(F) A statement that the individual is not a citizen or resident of the United States;

(G) The number of personal exemptions claimed by the individual;

(H) A statement as to whether the compensation to be paid to him or her during the taxable year is or will be exempt from income tax and the reason why the compensation is exempt;

(I) If the compensation is exempt from withholding by reason of an income tax treaty to which the United States is a party, the tax treaty and provision under which the exemption from withholding is claimed and the country of which the individual is a resident;

(J) Sufficient facts to justify the claim in exemption from withholding; and

(K) Any other information as may be required by the form or accompanying instructions in addition to, or in lieu of, the information described in this paragraph (b)(2)(ii).

(iii) *Review by withholding agent.* The exemption from withholding provided by paragraph (b)(1)(iv) of this section shall not apply unless the withholding agent accepts (in the manner provided in paragraph (b)(2)(iv) of this section) the statement on Form 8233 supplied by the nonresident alien individual. Before accepting the statement the withholding agent must examine the statement. If the withholding agent knows or has reason to know that any of the facts or assertions on Form 8233 may be false or that the eligibility of the individual's compensation for the exemption cannot be readily determined, the withholding agent may not accept the statement on Form 8233 and is required to withhold under this section. If the withholding agent accepts the statement and subsequently finds that any of the facts or assertions contained on Form 8233 may be false or that the eligibility of the individual's compensation for the exemption can no longer be readily determined, then the withholding agent shall promptly so notify the Assistant Commissioner (International) by letter, and the withholding agent is not relieved of liability to withhold on any amounts still to be paid. If the withholding agent is notified by the Assistant Commissioner (International) that the eligibility of the individual's compensation for the exemption is in doubt or that such compensation is not eligible for the exemption, the withholding agent is required to withhold under this section. The rules of this paragraph are illustrated by the following examples.

Example 1. C, a nonresident alien individual, submits Form 8233 to W, a withholding agent. The statement on Form 8233 does not include all the information required by paragraph (b)(2)(ii) of this section. Therefore, W has reason to know that he or she cannot readily determine whether C's compensation for personal services is eligible for an exemption from withholding and, therefore, W must withhold.

Example 2. D, a nonresident alien, is performing services for W, a withholding agent. W has accepted a statement on Form 8233 submitted by D, according to the provisions of this section. W receives notice from the Internal Revenue Service that the eligibility of D's compensation for a withholding exemption is in doubt. Therefore, W has reason to know that the eligibility of the compensation for a withholding exemption cannot be readily determined, as of the date W receives the notification, and W must withhold tax under section 1441 on amounts paid after receipt of the notification.

Example 3. E, a nonresident alien individual, submits Form 8233 to W, a withholding agent for whom E is to perform personal services. The statement contains all the information requested on Form 8233. E claims an exemption from withholding based on a personal exemption amount computed on the number of days E will perform personal services for W in the United States. If W does not know or have reason to know that any statement on the Form 8233 is false or that the eligibility of E's compensation for the withholding exemption cannot be readily determined, W can accept the statement on Form 8233 and exempt from withholding the appropriate amount of E's income.

(iv) *Acceptance by withholding agent.* If after the review described in paragraph (b)(2)(iii) of this section the withholding agent is satisfied that an exemption from withholding is warranted, the withholding agent may accept the statement by making a certification, verified by a declaration

that it is made under the penalties of perjury, on Form 8233. The certification shall be—

(A) That the withholding agent has examined the statement,

(B) That the withholding agent is satisfied that an exemption from withholding is warranted, and

(C) That the withholding agent does not know or have reason to know that the individual's compensation is not entitled to the exemption or that the eligibility of the individual's compensation for the exemption cannot be readily determined.

(v) *Copies of Form 8233.* The withholding agent shall forward one copy of each Form 8233 that is accepted under paragraph (b)(2)(iv) of this section to the Assistant Commissioner (International), within five days of such acceptance. The withholding agent shall retain a copy of Form 8233.

(3) *Withholding agreements.* Compensation for personal services of a nonresident alien individual who is engaged during the taxable year in the conduct of a trade or business within the United States may be wholly or partially exempted from the withholding required by §1.1441–1 if an agreement is reached between the Assistant Commissioner (International) and the alien individual with respect to the amount of withholding required. Such agreement shall be available in the circumstances and in the manner set forth by the Internal Revenue Service, and shall be effective for payments covered by the agreement that are made after the agreement is executed by all parties. The alien individual must agree to timely file an income tax return for the current taxable year.

(4) *Final payment exemption*—(i) *General rule.* Compensation for independent personal services of a nonresident alien individual who is engaged during the taxable year in the conduct of a trade or business within the United States may be wholly or partially exempted from the withholding required by §1.1441–1 from the final payment of compensation for independent personal services. This exemption does not apply to wages. This exemption from withholding is available only once during an alien individual's taxable year and is obtained by the alien individual presenting to the withholding agent a letter in duplicate from a district director stating the amount of compensation subject to the exemption and the amount that would otherwise be withheld from such final payment under section 1441 that shall be paid to the alien individual due to the exemption. The alien individual shall attach a copy of the letter to his or her income tax return for the taxable year for which the exemption is effective.

(ii) *Final payment of compensation for personal services.* For purposes of this paragraph, final payment of compensation for personal services means the last payment of compensation, other than wages, for personal services rendered within the United States that the individual expects to receive from any withholding agent during the taxable year.

(iii) *Manner of applying for final payment exemption.* In order to obtain the final payment exemption provided by paragraph (b)(4)(i) of this section, the nonresident alien individual (or his or her agent) must file the forms and provide the information required by the district director. Ordinary and necessary business expenses may be taken into account if substantiated to the satisfaction of the district director. The alien individual must submit a statement, signed by him or her and

verified by a declaration that it is made under the penalties of perjury, that all the information provided is true and that to his or her knowledge no relevant information has been omitted. The information required to be submitted includes, but is not limited to—

(A) A statement by each withholding agent from whom amounts of gross income effectively connected with the conduct of a trade or business within the United States have been received by the alien individual during the taxable year, of the amount of such income paid and the amount of tax withheld, signed and verified by a declaration that it is made under penalties of perjury;

(B) A statement by the withholding agent from whom the final payment of compensation for personal services will be received, of the amount of such final payment and the amount which would be withheld under §1.1441–1 if a final payment exemption under paragraph (b)(4)(i) of this section is not granted, signed and verified by a declaration that it is made under penalties of perjury;

(C) A statement by the individual that he or she does not intend to receive any other amounts of gross income effectively connected with the conduct of a trade or business within the United States during the current taxable year;

(D) The amount of tax which has been withheld (or paid) under any other provision of the Code or regulations with respect to any income effectively connected with the conduct of a trade or business within the United States during the current taxable year;

(E) The amount of any outstanding tax liabilities (and interest and penalties relating thereto) from the current taxable year or prior taxable periods; and

(F) The provision of any income tax treaty under which a partial or complete exemption from withholding may be claimed, the country of the individual's residence, and a statement of sufficient facts to justify an exemption pursuant to such treaty.

(iv) *Letter to withholding agent.* If the district director is satisfied that the information provided under paragraph (b)(4)(iii) of this section is sufficient, the district director will, after coordination with the Director of the Foreign Operations District, ascertain the amount of the alien individual's tentative income tax for the taxable year with respect to gross income that is effectively connected with the conduct of a trade or business within the United States. After the tentative tax has been ascertained, the district director will provide the alien individual with a letter to the withholding agent stating the amount of the final payment of compensation for personal services that is exempt from withholding, and the amount that would otherwise be withheld under section 1441 that shall be paid to the alien individual due to the exemption. The amount of compensation for personal services exempt from withholding under this paragraph (b)(4) shall not exceed $5,000.

Example 1. On July 15, 1983, B, a non-resident alien individual, appears before a district director with the information required by paragraph (b)(4)(iii) of this section. B has received personal service income in 1983 from which $3,000 has been withheld under section 1441. On August 1, 1983, B will receive $5,000 in personal service income from W. B does not intend to receive any other income subject to U.S. tax during 1983. Taking into account B's substantiated deductible business expenses, the district director computes the tentative tax liability on B's income effectively connected with the conduct of a trade or business in the United States during 1983 (including the $5,000 payment to be made on August 1, 1983) to be $3,300. B does not owe U.S. tax for any other taxable periods. The amount of B's final payment exemption is determined as follows:

(*1*) The amount of total withholding is $4,500 ($3,000 previously withheld plus $1,500, 30% of the $5,000 final payment);

(*2*) The amount of tentative excess withholding is $1,200 (total withholding of $4,500 minus B's tentative tax liability of $3,300); and

(*3*) To allow B to receive $1,200 of the amount which would otherwise have been withheld from the final payment, the district director allows a withholding exemption for $4,000 of B's final payment. W must withhold $300 from the final payment.

Example 2. The facts are the same as in Example 1 except B will receive a final payment of compensation on August 1, 1983, in the amount of $10,000 and B's tentative tax liability is $3,900. The amount of B's final payment exemption is determined as follows:

(*1*) The amount of total withholding is $6,000 ($3,000 previously withheld plus $3,000, 30% of the $10,000 final payment);

(*2*) The amount of tentative excess withholding is $2,100 (total withholding of $6,000 minus B's tentative tax liability of $3,900); and

(*3*) To allow B to receive $2,100 of the amount which would otherwise be withheld from the final payment, $7,000 of the final payment would have to be exempt from withholding; however, as no more than $5,000 of the final payment can be exempt from withholding under this paragraph (b)(4), the district director allows a withholding exemption for $5,000 of B's final payment. B must file a claim for refund at the end of the taxable year to obtain a refund of $600. W must withhold $1,500 from the final payment.

(5) *Requirement of return*. The tentative tax determined by the district director under paragraph (b)(4)(iv) of this section or by the Director of the Foreign Operations District under the withholding agreement procedure of paragraph (b)(3) of this section shall not constitute a final determination of the income tax liability of the nonresident alien individual, nor shall such determination constitute a tax return of the nonresident alien individual for any taxable period. An alien individual who applies for or obtains an exemption from withholding under the procedures of paragraphs (b) (2), (3), or (4) of this section is not relieved of the obligation to file a return of income under section 6012.

(6) *Personal exemption*—(i) *In general*. To determine the tax to be withheld at source under § 1.1441–1 from remuneration paid for personal services performed within the United States by a nonresident alien individual and from scholarship and fellowship income described in paragraph (c) of this section, a withholding agent may take into account one personal exemption pursuant to sections 873(b)(3) and 151 regardless of whether the income is effectively connected. For purposes of withholding under section 1441 on remuneration for personal services, the exemption must be prorated upon a daily basis for the period during which the personal services are performed within the United States by the nonresident alien individual by dividing by 365 the number of days in the period during which the individual is present in the United States for the purpose of performing the services and multiplying the result by the amount of the personal exemption in effect for the taxable year. See § 31.3402(f)(6)–1 of this chapter.

(ii) *Multiple exemptions*. More than one personal exemption may be claimed in the case of a resident of a contiguous country or a national of the United States under section 873(b)(3). In addition, residents of a country with which the United States has an income tax treaty in effect may be eligible to claim more than one personal exemption if the treaty so provides. Claims for more than one personal exemption shall be made on the withholding certificate furnished to the withholding agent. The exemption must be prorated on a daily basis in the same manner as described in paragraph (b)(6)(i) of this section.

(iii) *Special rule where both certain scholarship and compensation income are received*. The fact that both non-compensatory scholarship income and compensation income (including compensatory scholarship income) are received during the taxable year does not entitle the taxpayer to claim more than one personal exemption amount (or more than the additional amounts permitted under paragraph (b)(6)(ii) of this section). Thus, if a nonresident alien student receives non-compensatory taxable scholarship income from one withholding agent and compensation income from another withholding agent, no more than the total personal exemption amount permitted under the Internal Revenue Code or under an income tax treaty may be taken into account by both withholding agents. For this purpose, the withholding agent may rely on a representation from the beneficial owner that the exemption amount claimed does not exceed the amount permissible under this section.

(c) *Special rules for scholarship and fellowship income*—(1) *In general*. Under section 871(c), certain amounts paid as a scholarship or fellowship for study, training, or research in the United States to a nonresident alien individual temporarily present in the United States as a nonimmigrant under section 101(a)(15) (F), (J), (M), or (Q) of the Immigration and Nationality Act are treated as income effectively connected with the conduct of a trade

or business within the United States. The amounts described in the preceding sentence are those amounts that do not represent compensation for services. Such amounts (as described in the second sentence of section 1441(b)) are subject to withholding under section 1441, but at the lower rate of 14 percent. That rate may be reduced under the provisions of an income tax treaty. Claims of a reduced rate under an income tax treaty shall be made under the procedures described in §1.1441–6(b)(1). Therefore, claims for reduction in withholding under an income tax treaty on amounts described in this paragraph (c)(1) may not be made on a Form 8233. However, if the payee is receiving both compensation for personal services (including compensatory scholarship income) and non-compensatory scholarship income described in this paragraph (c)(1) from the same withholding agent, claims for reduction of withholding on both types of income may be made on Form 8233.

(2) *Alternate withholding election.* A withholding agent may elect to withhold on the amounts described in paragraph (c)(1) of this section at the rates applicable under section 3402, as if the income were wages. Such election shall be made by obtaining a Form W–4 (or an acceptable substitute or such other form as the IRS may prescribe) from the beneficial owner. The fact that the withholding agent asks the beneficial owner to furnish a Form W–4 for such fellowship or scholarship income or to take such income into account in preparing such Form W–4 shall serve as notice to the beneficial owner that the income is being treated as wages for purposes of withholding tax under section 1441.

(d) *Annuities received under qualified plans.* Withholding is not required under section §1.1441–1 in the case of any amount received as an annuity if the amount is exempt from tax under section 871(f) and the regulations under that section. The withholding agent may exempt the payment from withholding if, prior to payment, it can reliably associate the payment with documentation upon which it can rely to treat the payment as made to a beneficial owner in accordance with §1.1441–1(e)(1)(ii). A beneficial owner withholding certificate furnished for purposes of claiming the benefits of the exemption under this paragraph (d) is valid only if, in addition to other applicable requirements, it contains a taxpayer identifying number.

(e) *Per diem of certain alien trainees.* Withholding is not required under section 1441(a) and §1.1441–1 on per diem amounts paid for subsistence by the United States Government (directly or by contract) to any nonresident alien individual who is engaged in any program of training in the United States under the Mutual Security Act of 1954, as amended (22 U.S.C. chapter 24). This rule shall apply even though such amounts are subject to tax under section 871. Any exemption from withholding pursuant to this paragraph (e) applies without a requirement that documentation be furnished to the withholding agent. However, documentation may have to be furnished for purposes of the information reporting provisions under section 6041 and backup withholding under section 3406. The exemption from withholding granted by this paragraph (e) is not a determination that the amounts are not fixed or determinable annual or periodical income.

(f) *Failure to receive withholding certificates timely or to act in accordance with applicable presumptions.* See applicable procedures described in §1.1441–1(b)(7) in the event the withholding agent does not hold an appropriate withholding certificate or other appropriate documentation at the time of payment or does not act in accordance with applicable presumptions described in paragraph (a) (2)(i), (2)(ii), or (3) of this section.

(g) *Effective date*—(1) *General rule.* This section applies to payments made after December 31, 2000.

(2) *Transition rules.* The validity of a Form 4224 or 8233 that was valid on January 1, 1998, under the regulations in effect prior to January 1, 2001 (see 26 CFR part 1, revised April 1, 1999) and expired, or will expire, at any time during 1998, is extended until December 31, 1998. The validity of a Form 4224 or 8233 that is valid on or after January 1, 1999, remains valid until its validity expires under the regulations in effect prior to

January 1, 2001 (see 26 CFR part 1, revised April 1, 1999) but in no event will such form remain valid after December 31, 2000. The rule in this paragraph (g)(2), however, does not apply to extend the validity period of a Form 4224 or 8223 that expires solely by reason of changes in the circumstances of the person whose name is on the certificate. Notwithstanding the first three sentences of this paragraph (g)(2), a withholding agent may choose to not take advantage of the transition rule in this paragraph (g)(2) with respect to one or more withholding certificates valid under the regulations in effect prior to January 1, 2001 (see 26 CFR part 1, revised April 1, 1999) and, therefore, to require withholding certificates conforming to the requirements described in this section (new withholding certificates). For purposes of this section, a new withholding certificate is deemed to satisfy the documentation requirement under the regulations in effect prior to January 1, 2001 (see 26 CFR part 1, revised April 1, 1999). Further, a new withholding certificate remains valid for the period specified in §1.1441–1(e)(4)(ii), regardless of when the certificate is obtained.

[T.D. 6500, 25 FR 12075, Nov. 26, 1960]

EDITORIAL NOTE: For FEDERAL REGISTER citations affecting §1.1441–4, see the List of Sections Affected in the Finding Aids section of this volume.

§ 1.1441–5 Withholding on payments to partnerships, trusts, and estates.

(a) *In general.* This section describes the rules that apply to payments made to partnerships, trusts, and estates. Paragraph (b) of this section prescribes the rules that apply to a withholding agent making a payment to a U.S. partnership, trust, or estate. It also prescribes the obligations of a U.S. partnership, trust, or estate that makes a payment to a foreign partner, beneficiary, or owner. Paragraph (c) of this section prescribes rules that apply to a withholding agent that makes a payment to a foreign partnership. Paragraph (d) of this section provides presumption rules that apply to payments made to foreign partnerships. Paragraph (e) of this section prescribes rules, including presumption rules, that apply to a withholding agent that makes a payment to a foreign trust or foreign estate.

(b) *Rules applicable to U.S. partnerships, trusts, and estates*—(1) *Payments to U.S. partnerships, trusts, and estates.* No withholding is required under section 1.1441–1(b)(1) on a payment of an amount subject to withholding (as defined in §1.1441–2(a)) that a withholding agent may treat as made to a U.S. payee. Therefore, if a withholding agent can reliably associate (within the meaning of §1.1441–2(b)(vii)) a Form W–9 provided in accordance with §1.1441–1(d)(2) or (4) by a U.S. partnership, U.S. trust, or a U.S. estate the withholding agent may treat the payment as made to a U.S. payee and the payment is not subject to withholding under section 1441 even though the partnership, trust, or estate may have foreign partners, beneficiaries, or owners. A withholding agent is also not required to withhold under section 1441 on a payment it makes to an entity presumed to be a U.S. payee under paragraphs (d)(2) and (e)(6)(ii) of this section.

(2) *Withholding by U.S. payees*—(i) *U.S. partnerships*—(A) *In general.* A U.S. partnership is required to withhold under §1.1441–1 as a withholding agent on an amount subject to withholding (as defined in §1.1441–2(a)) that is includible in the gross income of a partner that is a foreign person. Subject to paragraph (b)(2)(v) of this section, a U.S. partnership shall withhold when any distributions that include amounts subject to withholding (including guaranteed payments made by a U.S. partnership) are made. To the extent a foreign partner's distributive share of income subject to withholding has not actually been distributed to the foreign partner, the U.S. partnership must withhold on the foreign partner's distributive share of the income on the earlier of the date that the statement required under section 6031(b) is mailed or otherwise provided to the partner or the due date for furnishing the statement.

(B) *Effectively connected income of partners.* Withholding on items of income that are effectively connected income in the hands of the partners who are foreign persons is governed by section 1446 and not by this section. In

such a case, partners in a domestic partnership are not required to furnish a withholding certificate in order to claim an exemption from withholding under section 1441(c)(1) and § 1.1441–4.

(ii) *U.S. simple trusts.* A U.S. trust that is described in section 651(a) (a U.S. simple trust) is required to withhold under chapter 3 of the Internal Revenue Code as a withholding agent on the distributable net income includible in the gross income of a foreign beneficiary to the extent the distributable net income is an amount subject to withholding (as defined in § 1.1441–2(a)). A U.S. simple trust shall withhold when a distribution is made to a foreign beneficiary. The U.S. trust may make a reasonable estimate of the portion of the distribution that constitutes distributable net income consisting of an amount subject to withholding and apply the appropriate rate of withholding to the estimated amount. If, at the end of the taxable year in which the distribution is made, the U.S. simple trust determines that it underwithheld under section 1441 or 1442, the trust shall be liable as a withholding agent for the amount under withheld under section 1461. No penalties shall be imposed for failure to withhold and deposit the tax if the U.S. simple trust's estimate was reasonable and the trust pays the underwithheld amount on or before the due date of Form 1042 under section 1461. Any payment of underwithheld amounts by the U.S. simple trust shall not be treated as income subject to additional withholding even if that amount is treated as additional income to the foreign beneficiary, unless the additional amount is income to the foreign beneficiary as a result of a contractual arrangement between the parties regarding the satisfaction of the foreign beneficiary's tax liability. To the extent a U.S. simple trust is required to, but does not, distribute such income to a foreign beneficiary, the U.S. trust must withhold on the foreign beneficiary's allocable share at the time the income is required (without extension) to be reported on Form 1042-S under § 1.1461–1(c).

(iii) *U.S. complex trusts and U.S. estates.* A U.S. trust that is not a trust described in section 651(a) (a U.S. complex trust) is required to withhold under chapter 3 of the Internal Revenue Code as a withholding agent on the distributable net income includible in the gross income of a foreign beneficiary to the extent the distributable net income consists of an amount subject to withholding (as defined in § 1.1441–2(a)) that is, or is required to be, distributed currently. The U.S. complex trust shall withhold when a distribution is made to a foreign beneficiary. The trust may use the same procedures regarding an estimate of the amount subject to withholding as a U.S. simple trust under paragraph (b)(2)(ii) of this section. To the extent an amount subject to withholding is required to be, but is not actually distributed, the U.S. complex trust must withhold on the foreign beneficiary's allocable share at the time the income is required to be reported on Form 1042-S under § 1.1461–1(c), without extension. A U.S. estate is required to withhold under chapter 3 of the Internal Revenue Code on the distributable net income includible in the gross income of a foreign beneficiary to the extent the distributable net income consists of an amount subject to withholding (as defined in § 1.1441–2(a)) that is actually distributed. A U.S. estate may also use the reasonable estimate procedures of paragraph (b)(2)(ii) of this section. However, those procedures apply to an estate that has a taxable year other than a calendar year only if the estate files an amended return on Form 1042 for the calendar year in which the distribution was made and pays the underwithheld tax and interest within 60 days after the close of the taxable year in which the distribution was made.

(iv) *U.S. grantor trusts.* A U.S. trust that is described in section 671 through 679 (a U.S. grantor trust) must withhold on any income includible in the gross income of a foreign person that is treated as an owner of the grantor trust to the extent the amount includible consists of an amount that is subject to withholding (as described in § 1.1441–2(a)). The withholding must occur at the time the income is received by, or credited to, the trust.

(v) *Subsequent distribution.* If a U.S. partnership or U.S. trust withholds on

a foreign partner, beneficiary, or owner's share of an amount subject to withholding before the amount is actually distributed to the partner, beneficiary, or owner, withholding is not required when the amount is subsequently distributed.

(c) *Foreign partnerships*—(1) *Determination of payee*—(i) *Payments treated as made to partners.* Except as otherwise provided in paragraph (c)(1)(ii) of this section, the payees of a payment to a person that the withholding agent may treat as a nonwithholding foreign partnership under paragraph (c)(3)(i) or (d)(2) of this section are the partners (looking through partners that are foreign intermediaries or flow-through entities) as follows—

(A) If the withholding agent can reliably associate a partner's distributive share of the payment with a valid Form W–9 provided under §1.1441–1(d), the partner is a U.S. payee;

(B) If the withholding agent can reliably associate a partner's distributive share of the payment with a valid Form W–8, or other appropriate documentation, provided under §1.1441–1(e)(1)(ii), the partner is a payee that is a foreign beneficial owner;

(C) If the withholding agent can reliably associate a partner's distributive share of the payment with a qualified intermediary withholding certificate under §1.1441–1(e)(3)(ii), a nonqualified intermediary withholding certificate under §1.1441–1(e)(3)(iii), or a U.S. branch certificate under §1.1441–1(e)(3)(v), then the rules of §1.1441–1(b)(2)(v) shall apply to determine who the payee is in the same manner as if the partner's distributive share of the payment had been paid directly to such intermediary or U.S. branch;

(D) If the withholding agent can reliably associate the partner's distributive share with a withholding foreign partnership certificate under paragraph (c)(2)(iv) of this section or a nonwithholding foreign partnership certificate under paragraph (c)(3)(iii) of this section, then the rules of this paragraph (c)(1)(i) or paragraph (c)(1)(ii) of this section shall apply to determine whether the payment is treated as made to the partners of the higher-tier partnership under this paragraph (c)(1)(i) or to the higher-tier partnership itself (under the rules of paragraph (c)(1)(ii) of this section) in the same manner as if the partner's distributive share of the payment had been paid directly to the higher-tier foreign partnership;

(E) If the withholding agent can reliably associate the partner's distributive share with a withholding certificate described in paragraph (e) of this section regarding a foreign trust or estate, then the rules of paragraph (e) of this section shall apply to determine who the payees are; and

(F) If the withholding agent cannot reliably associate the partner's distributive share with a withholding certificate or other appropriate documentation, the partners are considered to be the payees and the presumptions described in paragraph (d)(3) of this section shall apply to determine their classification and status.

(ii) *Payments treated as made to the partnership.* A payment to a person that the withholding agent may treat as a foreign partnership is treated as a payment to the foreign partnership and not to its partners only if—

(A) The withholding agent can reliably associate the payment with a withholding certificate described in paragraph (c)(2)(iv) of this section (withholding certificate of a withholding foreign partnership);

(B) The withholding agent can reliably associate the payment with a withholding certificate described in paragraph (c)(3)(iii) of this section (nonwithholding foreign partnership) certifying that the payment is income that is effectively connected with the conduct of a trade or business in the United States; or

(C) The withholding agent can treat the income as effectively connected income under the presumption rules of §1.1441–4(a)(2)(ii) or (3)(i).

(iii) *Rules for reliably associating a payment with documentation.* For rules regarding the reliable association of a payment with documentation, see §1.1441–1(b)(2)(vii). In the absence of documentation, see §§1.1441–1(b)(3) and 1.6049–5(d) and paragraphs (d) and (e)(6) of this section for applicable presumptions.

(iv) *Examples*. The rules of paragraphs (c)(1)(i) and (ii) of this section are illustrated by the following examples:

Example 1. FP is a nonwithholding foreign partnership organized in Country X. FP has two partners, FC, a foreign corporation, and USP, a U.S. partnership. USWH, a U.S. withholding agent, makes a payment of U.S. source interest to FP. FP has provided USWH with a valid nonwithholding foreign partnership certificate, as described in paragraph (c)(3)(iii) of this section, with which it associates a beneficial owner withholding certificate from FC and a Form W–9 from USP together with the withholding statement required by paragraph (c)(3)(iv) of this section. USWH can reliably associate the payment of interest with the withholding certificates from FC and USP. Under paragraph (c)(1)(i) of this section, the payees of the interest payment are FC and USP.

Example 2. The facts are the same as in *Example 1*, except that FP1, a nonwithholding foreign partnership, is a partner in FP rather than USP. FP1 has two partners, A and B, both foreign persons. FP provides USWH with a valid nonwithholding foreign partnership certificate, as described in paragraph (c)(3)(iii) of this section, with which it associates a beneficial owner withholding certificate from FC and a nonwithholding foreign partnership certificate from FP1. In addition, foreign beneficial owner withholding certificates from A and B are associated with the nonwithholding foreign partnership withholding certificate from FP1. FP also provides the withholding statement required by paragraph (c)(3)(iv) of this section. USWH can reliably associate the interest payment with the withholding certificates provided by FC, A, and B. Therefore, under paragraph (c)(1)(i) of this section, the payees of the interest payment are FC, A, and B.

Example 3. USWH makes a payment of U.S. source dividends to WFP, a withholding foreign partnership. WFP has two partners, FC1 and FC2, both foreign corporations. USWH can reliably associate the payment with a valid withholding foreign partnership withholding certificate from WFP. Therefore, under paragraph (c)(1)(ii)(A) of this section, WFP is the payee of the dividends.

Example 4. USWH makes a payment of U.S. source royalties to FP, a foreign partnership. USWH can reliably associate the royalties with a valid withholding certificate from FP on which FP certifies that the income is effectively connected with the conduct of a trade or business in the United States. Therefore, under paragraph (c)(1)(ii)(B) of this section, FP is the payee of the royalties.

(2) *Withholding foreign partnerships*—(i) *Reliance on claim of withholding foreign partnership status*. A withholding foreign partnership is a foreign partnership that has entered into an agreement with the Internal Revenue Service (IRS), as described in paragraph (c)(2)(ii) of this section, with respect to distributions and guaranteed payments it makes to its partners. A withholding agent that can reliably associate a payment with a certificate described in paragraph (c)(2)(iv) of this section may treat the person to whom it makes the payment as a withholding foreign partnership for purposes of withholding under chapter 3 of the Internal Revenue Code, information reporting under chapter 61 of the Internal Revenue Code, backup withholding under section 3406, and withholding under other provisions of the Internal Revenue Code. Furnishing such a certificate is in lieu of transmitting to a withholding agent withholding certificates or other appropriate documentation for its partners. Although the withholding foreign partnership generally will be required to obtain withholding certificates or other appropriate documentation from its partners pursuant to its agreement with the IRS, it will generally not be required to attach such documentation to its withholding foreign partnership withholding certificate. A foreign partnership may act as a qualified intermediary under § 1.1441–1(e)(5) with respect to payments it makes to persons other than its partners. In addition, the IRS may permit a foreign partnership to act as a qualified intermediary under § 1.1441–1(e)(5)(ii)(D) with respect to its partners in appropriate circumstances.

(ii) *Withholding agreement*. The IRS may, upon request, enter into a withholding agreement with a foreign partnership pursuant to such procedures as the IRS may prescribe in published guidance (see § 601.601(d)(2) of this chapter). Under the withholding agreement, a foreign partnership shall generally be subject to the applicable withholding and reporting provisions applicable to withholding agents and payors under chapters 3 and 61 of the Internal Revenue Code, section 3406, the regulations under those provisions, and other withholding provisions of the Internal Revenue Code, except to the extent provided under the agreement. Under the agreement, a foreign partnership may agree to act as an acceptance agent to

perform the duties described in § 301.6109–1(d)(3)(iv)(A) of this chapter. The agreement may specify the manner in which applicable procedures for adjustments for underwithholding and overwithholding, including refund procedures, apply to the withholding foreign partnership and its partners and the extent to which applicable procedures may be modified. In particular, a withholding agreement may allow a withholding foreign partnership to claim refunds of overwithheld amounts on behalf of its customers. In addition, the agreement must specify the manner in which the IRS will audit the foreign partnership's books and records in order to verify the partnership's compliance with its agreement. A withholding foreign partnership must file a return on Form 1042 and information returns on Form 1042–S. The withholding foreign partnership agreement may also require a withholding foreign partnership to file a partnership return under section 6031(a) and partner statements under 6031(b).

(iii) *Withholding responsibility*. A withholding foreign partnership must assume primary withholding responsibility under chapter 3 of the Internal Revenue Code. It is not required to provide information to the withholding agent regarding each partner's distributive share of the payment. The withholding foreign partnership will be responsible for reporting the payments under § 1.1461–1(c) and chapter 61 of the Internal Revenue Code. A withholding agent making a payment to a withholding foreign partnership is not required to withhold any amount under chapter 3 of the Internal Revenue Code on a payment to the withholding foreign partnership, unless it has actual knowledge or reason to know that the foreign partnership is not a withholding foreign partnership. The withholding foreign partnership shall withhold the payments under the same procedures and at the same time as prescribed for withholding by a U.S. partnership under paragraph (b)(2) of this section, except that, for purposes of determining the partner's status, the provisions of paragraph (d)(4) of this section shall apply.

(iv) *Withholding certificate from a withholding foreign partnership*. The rules of § 1.1441–1(e)(4) shall apply to withholding certificates described in this paragraph (c)(2)(iv). A withholding certificate furnished by a withholding foreign partnership is valid with regard to any partner on whose behalf the certificate is furnished only if it is furnished on a Form W–8, an acceptable substitute form, or such other form as the IRS may prescribe, it is signed under penalties of perjury by a partner with authority to sign for the partnership, its validity has not expired, and it contains the information, statement, and certifications described in this paragraph (c)(2)(iv) as follows—

(A) The name, permanent residence address (as described in § 1.1441–1(e)(2)(ii)), and the employer identification number of the partnership, and the country under the laws of which the partnership is created or governed;

(B) A certification that the partnership is a withholding foreign partnership within the meaning of paragraph (c)(2)(i) of this section; and

(C) Any other information, certifications or statements as may be required by the withholding foreign partnership agreement with the IRS or the form or accompanying instructions in addition to, or in lieu of, the information, statements, and certifications described in this paragraph (c)(2)(iv).

(3) *Nonwithholding foreign partnerships*—(i) *Reliance on claim of foreign partnership status*. A withholding agent may treat a person as a nonwithholding foreign partnership if it receives from that person a nonwithholding foreign partnership withholding certificate as described in paragraph (c)(3)(iii) of this section. A withholding agent that does not receive a nonwithholding foreign partnership withholding certificate, or does not receive a valid withholding certificate, from an entity it knows, or has reason to know, is a foreign partnership, must apply the presumption rules of §§ 1.1441–1(b)(3) and 1.6049–5(d) and paragraphs (d) and (e)(6) of this section. In addition, to the extent a withholding agent cannot, prior to a payment, reliably associate the payment with valid documentation from a payee that is associated with the nonwithholding foreign partnership withholding certificate or has insufficient

information to report the payment on Form 1042–S or Form 1099, to the extent reporting is required, must also apply the presumption rules. See §1.1441–1(b)(2)(vii)(A) and (B) for rules regarding reliable association. See paragraph (c)(3)(iv) of this section and §1.1441–1(e)(3)(iv) for alternative procedures permitting allocation information to be received after a payment is made.

(ii) *Reliance on claim of reduced withholding by a partnership for its partners.* This paragraph (c)(3)(ii) describes the manner in which a withholding agent may rely on a claim of reduced withholding when making a payment to a nonwithholding foreign partnership. To the extent that a withholding agent treats a payment to a nonwithholding foreign partnership as a payment to the nonwithholding foreign partnership's partners (whether direct or indirect) in accordance with paragraph (c)(1)(i) of this section, it may rely on a claim for reduced withholding by the partner if, prior to the payment, the withholding agent can reliably associate the payment (within the meaning of §1.1441–1(b)(2)(vii)) with a valid withholding certificate or other appropriate documentation from the partner that establishes entitlement to a reduced rate of withholding. A withholding certificate or other appropriate documentation that establishes entitlement to a reduced rate of withholding is a beneficial owner withholding certificate described in §1.1441–1(e)(2)(i), documentary evidence described in §1.1441–6(c)(3) or (4) or 1.6049–5(c)(1) (for a partner claiming to be a foreign person and a beneficial owner, determined under the provisions of §1.1441–1(c)(6)), a Form W–9 described in §1.1441–1(d) (for a partner claiming to be a U.S. payee), or a withholding foreign partnership withholding certificate described in paragraph (c)(2)(iv) of this section. Unless a nonwithholding foreign partnership withholding certificate is provided for income claimed to be effectively connected with the conduct of a trade or business in the United States, a claim must be presented for each portion of the payment that represents an item of income includible in the distributive share of a partner as required under paragraph (c)(3)(iii)(C) of this section. When making a claim for several partners, the partnership may present a single nonwithholding foreign partnership withholding certificate to which the partners' certificates or other appropriate documentation are associated. Where the nonwithholding foreign partnership withholding certificate is provided for income claimed to be effectively connected with the conduct of a trade or business in the United States under paragraph (c)(3)(iii)(D) of this section, the claim may be presented without having to identify any partner's distributive share of the payment.

(iii) *Withholding certificate from a nonwithholding foreign partnership.* A nonwithholding foreign partnership shall provide a nonwithholding foreign partnership withholding certificate with respect to reportable amounts received by the nonwithholding foreign partnership. A nonwithholding foreign partnership withholding certificate is valid only to the extent it is furnished on a Form W–8 (or an acceptable substitute form or such other form as the IRS may prescribe), it is signed under penalties of perjury by a partner with authority to sign for the partnership, its validity has not expired, and it contains the information, statements, and certifications described in this paragraph (c)(3)(iii) and paragraph (c)(3)(iv) of this section, and the withholding certificates and other appropriate documentation for all the persons to whom the certificate relates are associated with the certificate. The rules of §1.1441–1(e)(4) shall apply to withholding certificates described in this paragraph (c)(3)(iii). No withholding certificates or other appropriate documentation from persons who derive income through a partnership (whether or not U.S. exempt recipients) are required to be associated with the nonwithholding foreign partnership withholding certificate if the certificate is furnished solely for income claimed to be effectively connected with the conduct of a trade or business in the United States. Withholding certificates and other appropriate documentation that may be associated with the nonwithholding foreign partnership withholding certificate consist of beneficial owner withholding certificates under

§1.1441–1(e)(2)(i), intermediary withholding certificates under §1.1441–1(e)(3)(i), withholding foreign partnership withholding certificates under paragraph (c)(2)(iv) of this section, nonwithholding foreign partnership withholding certificates under this paragraph (c)(3)(iii), withholding certificates from foreign trusts or estates under paragraph (e) of this section, documentary evidence described in §1.1441–6(c)(3) or (4) or documentary evidence described in §1.6049–5(c)(1), and any other documentation or certificates applicable under other provisions of the Internal Revenue Code or regulations that certify or establish the status of the payee or beneficial owner as a U.S. or a foreign person. Nothing in this paragraph (c)(3)(iii) shall require a nonwithholding foreign partnership to furnish original documentation. Copies of certificates or documentary evidence may be transmitted to the U.S. withholding agent, in which case the nonwithholding foreign partnership must retain the original documentation for the same time period that the copy is required to be retained by the withholding agent under §1.1441–1(e)(4)(iii) and must provide it to the withholding agent upon request. The information, statement, and certifications required on the withholding certificate are as follows—

(A) The name, permanent residence address (as described in §1.1441–1(e)(2)(ii)), and the employer identification number of the partnership, if any, and the country under the laws of which the partnership is created or governed;

(B) A certification that the person whose name is on the certificate is a foreign partnership;

(C) A withholding statement associated with the nonwithholding foreign partnership withholding certificate that provides all of the information required by paragraph (c)(3)(iv) of this section and §1.1441–1(e)(3)(iv). No withholding statement is required, however, for a nonwithholding foreign partnership withholding certificate furnished for income claimed to be effectively connected with the conduct of a trade or business in the United States;

(D) A certification that the income is effectively connected with the conduct of a trade or business in the United States, if applicable; and

(E) Any other information, certifications, or statements required by the form or accompanying instructions in addition to, or in lieu of, the information and certifications described in this paragraph (c)(3)(iii).

(iv) *Withholding statement provided by nonwithholding foreign partnership.* The provisions of §1.1441–1(e)(3)(iv) (regarding a withholding statement) shall apply to a nonwithholding foreign partnership by substituting the term nonwithholding foreign partnership for the term nonqualified intermediary.

(v) *Withholding and reporting by a foreign partnership.* A nonwithholding foreign partnership described in this paragraph (c)(3) that receives an amount subject to withholding (as defined in §1.1441–2(a)) shall be required to withhold and report such payment under chapter 3 of the Internal Revenue Code and the regulations thereunder except as otherwise provided in this paragraph (c)(3)(v). A nonwithholding foreign partnership shall not be required to withhold and report if it has provided a valid nonwithholding foreign partnership withholding certificate, it has provided all of the information required by paragraph (c)(3)(iv) of this section (withholding statement), and it does not know, and has no reason to know, that another withholding agent failed to withhold the correct amount or failed to report the payment correctly under §1.1461–1(c). A withholding foreign partnership's obligations to withhold and report shall be determined in accordance with its withholding foreign partnership agreement.

(d) *Presumption rules*—(1) *In general.* This paragraph (d) contains the applicable presumptions for a withholding agent (including a partnership) to determine the classification and status of a partnership and its partners in the absence of documentation. The provisions of §1.1441–1(b)(3)(iv) (regarding the 90-day grace period) and §1.1441–1(b)(3)(vii) through (ix) shall apply for purposes of this paragraph (d).

(2) *Determination of partnership status as U.S. or foreign in the absence of documentation.* In the absence of a valid representation of U.S. partnership status in accordance with paragraph (b)(1) of this section or of foreign partnership status in accordance with paragraph (c)(2)(i) or (3)(i) of this section, the withholding agent shall determine the classification of the payee under the presumptions set forth in §1.1441–1(b)(3)(ii). If the withholding agent treats the payee as a partnership under §1.1441–1(b)(3)(ii), the withholding agent shall presume the partnership to be a U.S. partnership unless there are indicia of foreign status. If there are indicia of foreign status, the withholding agent may presume the partnership to be foreign. Indicia of foreign status exist only if the withholding agent has actual knowledge of the payee's employer identification number and that number begins with the two digits ''98,'' the withholding agent's communications with the payee are mailed to an address in a foreign country, or the payment is made outside the United States (as defined in §1.6049–5(e)). For rules regarding reliable association with a withholding certificate from a domestic or a foreign partnership, see §1.1441–1(b)(2)(vii).

(3) *Determination of partners' status in the absence of certain documentation.* If a nonwithholding foreign partnership has provided a nonwithholding foreign partnership withholding certificate under paragraph (c)(3)(iii) of this section that would be valid except that the withholding agent cannot reliably associate all or a portion of the payment with valid documentation from a partner of the partnership, then the withholding agent may apply the presumption rule of this paragraph (d)(3) with respect to all or a portion of the payment for which documentation has not been received. See §1.1441–1(b)(2)(vii)(A) and (B) for rules regarding reliable association. The presumption rule of this paragraph (d)(3) also applies to a person that is presumed to be a foreign partnership under the rule of paragraph (d)(2) of this section. Any portion of a payment that the withholding agent cannot treat as reliably associated with valid documentation from a partner may be presumed made to a foreign payee. As a result, any payment of an amount subject to withholding is subject to withholding at a rate of 30 percent. Any payment that is presumed to be made to an undocumented foreign payee must be reported on Form 1042–S. See §1.1461–1(c).

(4) *Determination by a withholding foreign partnership of the status of its partners.* A withholding foreign partnership shall determine whether the partners or some other persons are the payees of the partners' distributive shares of any payment made by a withholding foreign partnership by applying the rules of §1.1441–1(b)(2), paragraph (c)(1) of this section (in the case of a partner that is a foreign partnership), and paragraph (e)(3) of this section (in the case of a partner that is a foreign estate or a foreign trust). Further, the provisions of paragraph (d)(3) of this section shall apply to determine the status of partners and the applicable withholding rates to the extent that, at the time the foreign partnership is required to withhold on a payment, it cannot reliably associate the amount with documentation for any one or more of its partners.

(e) *Foreign trusts and estates*—(1) *In general.* This paragraph (e) provides rules applicable to payments of amounts subject to withholding (as defined in §1.1441–2(a)) that a withholding agent may treat as made to any foreign trust or a foreign estate. For rules relating to payments to a U.S. trust or a U.S. estate, see paragraph (b) of this section. For the definitions of foreign simple trust, foreign complex trust, and foreign grantor trust, see §1.1441–1(c)(24), (25), and (26).

(2) *Payments to foreign complex trusts and foreign estates.* Under §1.1441–1(c)(6)(ii)(D), a foreign complex trust or foreign estate is generally considered to be the beneficial owner of income paid to the foreign complex trust or foreign estate. See paragraph (e)(4) of this section for rules describing when a withholding agent may treat a payment as made to a foreign complex trust or a foreign estate.

(3) *Payees of payments to foreign simple trusts and foreign grantor trusts*—(i) *Payments for which beneficiaries and owners*

are payees. For purposes of the regulations under chapters 3 and 61 of the Internal Revenue Code and section 3406, a foreign simple trust is not a beneficial owner or a payee of a payment. Also, a foreign grantor trust (or a portion of a trust that is a foreign grantor trust) is not considered a beneficial owner or a payee of a payment. Except as otherwise provided in paragraph (e)(3)(ii) of this section, the payees of a payment made to a person that the withholding agent may treat as a foreign simple trust or a foreign grantor trust (or a portion of a trust that is a foreign grantor trust) are determined under the rules of this paragraph (e)(3)(i). The payees shall be treated as the beneficial owners if they may be so treated under §1.1441–1(c)(6)(ii)(C) and they provide documentation supporting their status as the beneficial owners. The payees of a payment to a foreign simple trust or foreign grantor trust are determined as follows—

(A) If the withholding agent can reliably associate a payment with a valid Form W–9 provided under §1.1441–1(d) from a beneficiary or owner of the foreign trust, then the beneficiary or owner is a U.S. payee;

(B) If the withholding agent can reliably associate a payment with a valid Form W–8, or other appropriate documentation, provided under §1.1441–1(e)(1)(ii) from a beneficiary or owner of the foreign trust, then the beneficiary or owner is a payee that is a foreign beneficial owner;

(C) If the withholding agent can reliably associate a payment with a qualified intermediary withholding certificate under §1.1441–1(e)(3)(ii), a nonqualified intermediary withholding certificate under §1.1441–1(e)(3)(ii), or a U.S. branch withholding certificate under §1.1441–1(e)(3)(v), then the rules of §1.1441–1(b)(2)(v) shall apply to determine the payee in the same manner as if the payment had been paid directly to such intermediary or U.S. branch;

(D) If the withholding agent can reliably associate a payment with a withholding foreign partnership withholding certificate under paragraph (c)(2)(iv) of this section or a nonwithholding foreign partnership withholding certificate under paragraph (c)(3)(iii) of this section, then the rules of paragraph (c)(1)(i) or (ii) of this section shall apply to determine the payee;

(E) If the withholding agent can reliably associate the payment with a foreign simple trust withholding certificate or a foreign grantor trust withholding certificate (both described in paragraph (e)(5)(iii) of this section) from a second or higher-tier foreign simple trust or foreign grantor trust, then the rules of this paragraph (e)(3)(i) or paragraph (e)(3)(ii) of this section shall apply to determine whether the payment is treated as made to a beneficiary or owner of the higher-tier trust or to the trust itself in the same manner as if the payment had been made directly to the higher-tier trust; and

(F) If the withholding agent cannot reliably associate a payment with a withholding certificate or other appropriate documentation, the payees shall be determined by applying the presumptions described in paragraph (e)(6) of this section.

(ii) *Payments for which trust is payee.* A payment to a person that the withholding agent may treat as made to a foreign trust under paragraph (e)(5)(iii) of this section is treated as a payment to the trust, and not to a beneficiary of the trust, only if—

(A) The withholding agent can reliably associate the payment with a foreign complex trust withholding certificate under paragraph (e)(4) of this section;

(B) The withholding agent can reliably associate the payment with a foreign simple trust withholding certificate under paragraph (e)(5)(iii) of this section certifying that the payment is income that is treated as effectively connected with the conduct of a trade or business in the United States; or

(C) The withholding agent can treat the income as effectively connected income under the presumption rules of §1.1441–4(a)(3)(i).

(4) *Reliance on claim of foreign complex trust or foreign estate status.* A withholding agent may treat a payment as made to a foreign complex trust or a foreign estate if the withholding agent can reliably associate the payment with a beneficial owner withholding certificate described in §1.1441–1(e)(2)(i) or other documentary evidence under

§ 1.1441–6(c)(3) or (4) (regarding a claim for treaty benefits) or § 1.6049–5(c)(1) (regarding documentary evidence to establish foreign status for purposes of chapter 61 of the Internal Revenue Code) that establishes the foreign complex trust or foreign estate's status as a beneficial owner. See paragraph (e)(6) of this section for presumption rules if documentation is lacking.

(5) *Foreign simple trust and foreign grantor trust*—(i) *Reliance on claim of foreign simple trust or foreign grantor trust status.* A withholding agent may treat a person as a foreign simple trust or foreign grantor trust if it receives from that person a foreign simple trust or foreign grantor trust withholding certificate as described in paragraph (e)(5)(iii) of this section. A withholding agent must apply the presumption rules of §§ 1.1441–1(b)(3) and 1.6049–5(d) and paragraphs (d) and (e)(6) of this section to the extent it cannot, prior to the payment, reliably associate a payment (within the meaning of § 1.1441–1(b)(2)(vii)) with a valid foreign simple trust or foreign grantor trust withholding certificate, it cannot reliably determine how much of the payment relates to valid documentation provided by a payee (*e.g.*, a person that is not itself a nonqualified intermediary, flow-through entity, or U.S. branch) associated with the foreign simple trust or foreign grantor trust withholding certificate, or it does not have sufficient information to report the payment on Form 1042–S or Form 1099, if reporting is required. See § 1.1441–1(b)(2)(vii)(A) and (B).

(ii) *Reliance on claim of reduced withholding by a foreign simple trust or foreign grantor trust for its beneficiaries or owners.* This paragraph (e)(5)(ii) describes the manner in which a withholding agent may rely on a claim of reduced withholding when making a payment to a foreign simple trust or foreign grantor trust. To the extent that a withholding agent treats a payment to a foreign simple trust or foreign grantor trust as a payment to payees other than the trust in accordance with paragraph (e)(3)(i) of this section, it may rely on a claim for reduced withholding by a beneficiary or owner if, prior to the payment, the withholding agent can reliably associate the payment (within the meaning of § 1.1441–1(b)(2)(vii)) with a valid withholding certificate or other appropriate documentation from a payee or beneficial owner that establishes entitlement to a reduced rate of withholding. A withholding certificate or other appropriate documentation that establishes entitlement to a reduced rate of withholding is a beneficial owner withholding certificate described in § 1.1441–1(e)(2)(i) or documentary evidence described in § 1.1441–6(c)(3) or(4) or in § 1.6049–5(c)(1) (for a beneficiary or owner claiming to be a foreign person and a beneficial owner, determined under the provisions of § 1.1441–1(c)(6)), a Form W–9 described in § 1.1441–1(d) (for a beneficiary or owner claiming to be a U.S. payee), or a withholding foreign partnership withholding certificate described in paragraph (c)(2)(iv) of this section. Unless a foreign simple trust or foreign grantor trust withholding certificate is provided for income treated as income effectively connected with the conduct of a trade or business in the United States, a claim must be presented for each payee's portion of the payment. When making a claim for several payees, the trust may present a single foreign simple trust or foreign grantor trust withholding certificate with which the payees' certificates or other appropriate documentation are associated. Where the foreign simple trust or foreign grantor trust withholding certificate is provided for income that is treated as effectively connected with the conduct of a trade or business in the United States under paragraph (e)(5)(iii)(D) of this section, the claim may be presented without having to identify any beneficiary's or grantor's distributive share of the payment.

(iii) *Withholding certificate from foreign simple trust or foreign grantor trust.* A withholding certificate furnished by a foreign simple trust or a foreign grantor trust that is not a withholding foreign trust (within the meaning of paragraph (e)(5)(v) of this section) is valid only if it is furnished on a Form W–8, an acceptable substitute form, or such other form as the IRS may prescribe, it is signed under penalties of perjury by a trustee, its validity has

not expired, it contains the information, statements, and certifications required by this paragraph (e)(5)(iii) and §1.1441–1(e)(3)(iv), and the withholding certificates or other appropriate documentation for all of the payees (as determined under paragraph (e)(3)(i) of this section) to whom the certificate relates are associated with the foreign simple trust or foreign grantor trust withholding certificate. The rules of §1.1441–1(e)(4) shall apply to withholding certificates described in this paragraph (e)(5)(iii). No withholding certificates or other appropriate documentation from persons who derive income through a foreign simple trust or a foreign grantor trust (whether or not U.S. exempt recipients) are required to be associated with the foreign simple trust or foreign grantor trust withholding certificate if the certificate is furnished solely for income that is treated as effectively connected with the conduct of a trade or business in the United States. Withholding certificates and other appropriate documentation (as determined under paragraph (e)(3)(i) of this section) that may be associated with a foreign simple trust or foreign grantor trust withholding certificate consist of beneficial owner withholding certificates under §1.1441–1(e)(2)(i), intermediary withholding certificates under §1.1441–1(e)(3)(i), withholding foreign partnership withholding certificates under paragraph (c)(2)(iv) of this section, nonwithholding foreign partnership withholding certificates under paragraph (c)(3)(iii) of this section, withholding certificates from foreign trusts or estates under paragraph (e)(4) or (5)(iii) of this section, documentary evidence described in §§1.1441–6(c)(3) or (4), or 1.6049–5(c)(1), and any other documentation or certificates applicable under other provisions of the Internal Revenue Code or regulations that certify or establish the status of the payee or beneficial owner as a U.S. or a foreign person. Nothing in this paragraph (e)(5)(iii) shall require a foreign simple trust or foreign grantor trust to provide original documentation. Copies of certificates or documentary evidence may be passed up to the U.S. withholding agent, in which case the foreign simple trust or foreign grantor trust must retain the original documentation for the same time period that the copy is required to be retained by the withholding agent under §1.1441–1(e)(4)(iii) and must provide it to the withholding agent upon request. The information, statement, and certifications required on a foreign simple trust or foreign grantor trust withholding certificate are as follows—

(A) The name, permanent residence address (as described in §1.1441–1(e)(2)(ii)), and the employer identification number, if required, of the trust and the country under the laws of which the trust is created;

(B) A certification that the person whose name is on the certificate is a foreign simple trust or a foreign grantor trust;

(C) A withholding statement associated with the foreign simple trust or foreign grantor trust withholding certificate that provides all of the information required by paragraph (e)(5)(iv) of this section. No withholding statement is required, however, for a foreign simple trust withholding certificate furnished for income that is treated as effectively connected with the conduct of a trade or business in the United States;

(D) A certification on a foreign simple trust withholding certificate that the income is treated as effectively connected with the conduct of a trade or business in the United States, if applicable; and

(E) Any other information, certifications, or statements required by the form or accompanying instructions in addition to, or in lieu of, the information, certifications, and statements described in this paragraph (e)(5)(iii);

(iv) *Withholding statement provided by a foreign simple trust or foreign grantor trust.* The provisions of §1.1441–1(e)(3)(iv) (regarding a withholding statement) shall apply to a foreign simple trust or foreign grantor trust by substituting the term foreign simple trust or foreign grantor trust for the term nonqualified intermediary.

(v) *Withholding foreign trusts.* The IRS may enter an agreement with a foreign trust to treat the trust or estate as a withholding foreign trust. Such an agreement shall generally follow the same principles as an agreement with a

withholding foreign partnership under paragraph (c)(2)(ii) of this section. A withholding agent may treat a payment to a withholding foreign trust in the same manner the withholding agent would treat a payment to a withholding foreign partnership. The IRS may also enter an agreement to treat a trust as a qualified intermediary in appropriate circumstances. See §1.1441–1(e)(5)(ii)(D).

(6) *Presumption rules*—(i) *In general.* This paragraph (e)(6) contains the applicable presumptions for a withholding agent (including a trust or estate) to determine the classification and status of a trust or estate and its beneficiaries or owners in the absence of valid documentation. The provisions of §1.1441–1(b)(3)(iv) (regarding the 90-day grace period) and §1.1441–1(b)(3)(vii) through (ix) shall apply for purposes of this paragraph (e)(6).

(ii) *Determination of status as U.S. or foreign trust or estate in the absence of documentation.* In the absence of valid documentation that establishes the U.S. status of a trust or estate under paragraph (b)(1) of this section and of documentation that establishes the foreign status of a trust or estate under paragraph (e)(4) or (5)(iii) of this section, the withholding agent shall determine the classification of the payee based upon the presumptions set forth in §1.1441–1(b)(3)(ii). If, based upon those presumptions, the withholding agent classifies the payee as a trust or estate, the trust or estate shall be presumed to be a U.S. trust or U.S. estate unless there are indicia of foreign status, in which case the trust or estate shall be presumed to be foreign. Indicia of foreign status exists if the withholding agent has actual knowledge of the payee's employer identification number and that number begins with the two digits ''98,'' the withholding agent's communications with the payee are mailed to an address in a foreign country, or the payment is made outside the United States (as defined in §1.6049–5(e)). If an undocumented payee is presumed to be a foreign trust it shall be presumed to be a foreign complex trust. If a withholding agent has documentary evidence that establishes that an entity is a foreign trust, but the withholding agent cannot determine whether the foreign trust is a complex trust, a simple trust, or foreign grantor trust, the withholding agent may presume that the trust is a foreign complex trust.

(iii) *Determination of beneficiary or owner's status in the absence of certain documentation.* If a foreign simple trust or foreign grantor trust has provided a foreign simple trust or foreign grantor trust withholding certificate under paragraph (e)(5)(iii) of this section but the payment to such trust cannot be reliably associated with valid documentation from a specific beneficiary or owner of the trust, then any portion of a payment that a withholding agent cannot treat as reliably associated with valid documentation from a beneficiary or owner may be presumed made to a foreign payee. As a result, any payment of an amount subject to withholding is subject to withholding at a rate of 30 percent. Any such payment that is presumed to be made to an undocumented foreign person must be reported on Form 1042–S. See §1.1461–1(c).

(f) *Failure to receive withholding certificate timely or to act in accordance with applicable presumptions.* See applicable procedures described in §1.1441–1(b)(7) in the event the withholding agent does not hold an appropriate withholding certificate or other appropriate documentation at the time of payment or fails to rely on the presumptions set forth in §1.1441–1(b)(3) or in paragraph (d) or (e) of this section.

(g) *Effective date*—(1) *General rule.* This section applies to payments made after December 31, 2000.

(2) *Transition rules.* The validity of a withholding certificate that was valid on January 1, 1998, under the regulations in effect prior to January 1, 2001 (see 26 CFR parts 1 and 35a, revised April 1, 1999) and expired, or will expire, at any time during 1998, is extended until December 31, 1998. The validity of a withholding certificate that is valid on or after January 1, 1999, remains valid until its validity expires under the regulations in effect prior to January 1, 2001 (see 26 CFR parts 1 and 35a, revised April 1, 1999) but in no event will such a withholding certificate remain valid after December 31, 2000. The rule in this paragraph (g)(2),

however, does not apply to extend the validity period of a withholding certificate that expires solely by reason of changes in the circumstances of the person whose name is on the certificate. Notwithstanding the first three sentences of this paragraph (g)(2), a withholding agent may choose to not take advantage of the transition rule in this paragraph (g)(2) with respect to one or more withholding certificates valid under the regulations in effect prior to January 1, 2001 (see 26 CFR parts 1 and 35a, revised April 1, 1999) and, therefore, to require withholding certificates conforming to the requirements described in this section (new withholding certificates). For purposes of this section, a new withholding certificate is deemed to satisfy the documentation requirement under the regulations in effect prior to January 1, 2001 (see 26 CFR parts 1 and 35a, revised April 1, 1999). Further, a new withholding certificate remains valid for the period specified in §1.1441–1(e)(4)(ii), regardless of when the certificate is obtained.

[T.D. 8734, 62 FR 53452, Oct. 14, 1997, as amended by T.D. 8804, 63 FR 72185, 72188, Dec. 31, 1998; 64 FR 73410, Dec. 30, 1999; T.D. 8881, 65 FR 32188, May 22, 2000; 66 FR 18188, Apr. 6, 2001]

§1.1441–6 Claim of reduced withholding under an income tax treaty.

(a) *In general.* The rate of withholding on a payment of income subject to withholding may be reduced to the extent provided under an income tax treaty in effect between the United States and a foreign country. Most benefits under income tax treaties are to foreign persons who reside in the treaty country. In some cases, benefits are available under an income tax treaty to U.S. citizens or U.S. residents or to residents of a third country.

See paragraph (b)(5) of this section for claims of benefits by U.S. persons. If the requirements of this section are met, the amount withheld from the payment may be reduced at source to account for the treaty benefit. See also §1.1441–4(b)(2) for rules regarding claims of reduced rate of withholding under an income tax treaty in the case of compensation from personal services.

(b) *Reliance on claim of reduced withholding under an income tax treaty*—(1) *In general.* The withholding imposed under section 1441, 1442, or 1443 on any payment to a foreign person is eligible for reduction under the terms of an income tax treaty only to the extent that such payment is treated as derived by a resident of an applicable treaty jurisdiction, such resident is a beneficial owner, and all other requirements for benefits under the treaty are satisfied. See section 894 and the regulations thereunder to determine whether a resident of a treaty country derives the income. Absent actual knowledge or reason to know otherwise, a withholding agent may rely on a claim that a beneficial owner is entitled to a reduced rate of withholding based upon an income tax treaty if, prior to the payment, the withholding agent can reliably associate the payment with a beneficial owner withholding certificate, described in §1.1441–1(e)(2), that contains the information necessary to support the claim, or, in the case of a payment of income described in paragraph (c)(2) of this section made outside the United States with respect to an offshore account, documentary evidence described in paragraphs (c)(3), (4) and (5) of this section. See §§1.6049–5(e) for the definition of payments made outside the United States and 1.6049–5(c)(1) for the definition of offshore account. For purposes of this paragraph (b)(1), a beneficial owner withholding certificate described in §1.1441–1(e)(2)(i) contains information necessary to support the claim for a treaty benefit only if it includes the beneficial owner's taxpayer identifying number (except as otherwise provided in paragraph (c)(1) of this section) and the representations that the beneficial owner derives the income under section 894 and the regulations thereunder, if required, and meets the limitation on benefits provisions of the treaty, if any. The withholding certificate must also contain any other representations required by this section and any other information, certifications, or statements as may be required by the form or accompanying instructions in addition to, or in place of, the information and certifications described in this section. Absent actual knowledge or reason to know that the

claims are incorrect (and subject to the standards of knowledge in § 1.1441–7(b)), a withholding agent may rely on the claims made on a withholding certificate or on documentary evidence. A withholding agent may also rely on the information contained in a withholding statement provided under §§ 1.1441–1(e)(3)(iv) and 1.1441–5(c)(3)(iv) and (e)(5)(iv) to determine whether the appropriate statements regarding section 894 and limitation on benefits have been provided in connection with documentary evidence. If the beneficial owner is a person related to the withholding agent within the meaning of section 482, the withholding certificate must also contain a representation that the beneficial owner will file the statement required under § 301.6114–1(d) of this chapter (if applicable). The requirement to file an information statement under section 6114 for income subject to withholding applies only to amounts received during the calendar year that, in the aggregate, exceed $500,000. See § 301.6114–1(d) of this chapter. The Internal Revenue Service (IRS) may apply the provisions of § 1.1441–1(e)(1)(ii)(B) to notify the withholding agent that the certificate cannot be relied upon to grant benefits under an income tax treaty. See § 1.1441–1(e)(4)(viii) regarding reliance on a withholding certificate by a withholding agent. The provisions of § 1.1441–1(b)(3)(iv) dealing with a 90-day grace period shall apply for purposes of this section.

(2) *Payment to fiscally transparent entity*—(i) *In general*. If the person claiming a reduced rate of withholding under an income tax treaty is the interest holder of an entity that is considered to be fiscally transparent (as defined in the regulations under section 894) by the interest holder's jurisdiction with respect to an item of income, then, with respect to such income derived by that person through the entity, the entity shall be treated as a flow-through entity and may provide a flow-through withholding certificate with which the withholding certificate or other documentary evidence of the interest holder that supports the claim for treaty benefits is associated. For purposes of the preceding sentence, interest holders do not include any direct or indirect interest holders that are themselves treated as fiscally transparent entities with respect to that income by the interest holder's jurisdiction. See § 1.1441–1(c)(23) and (e)(3)(i) for the definition of flow-through entity and flow-through withholding certificate. The entity may provide a beneficial owner withholding certificate, or beneficial owner documentation, with respect to any remaining portion of the income to the extent the entity is receiving income and is not treated as fiscally transparent by its own jurisdiction. Further, the entity may claim a reduced rate of withholding with respect to the portion of a payment for which it is not treated as fiscally transparent if it meets all the requirements to make such a claim and, in the case of treaty benefits, it provides the documentation required by paragraph (b)(1) of this section. If dual claims, as described in paragraph (b)(2)(iii) of this section, are made, multiple withholding certificates may have to be furnished. Multiple withholding certificates may also have to be furnished if the entity receives income for which a reduction of withholding is claimed under a provision of the Internal Revenue Code (*e.g.*, portfolio interest) and income for which a reduction of withholding is claimed under an income tax treaty.

(ii) *Certification by qualified intermediary*. Notwithstanding paragraph (b)(2)(i) of this section, a foreign entity that is fiscally transparent, as defined in the regulations under section 894, that is also a qualified intermediary for purposes of claiming a reduced rate of withholding under an income tax treaty for its interest holders (who are deriving the income paid to the entity as residents of an applicable treaty jurisdiction) may furnish a single qualified intermediary withholding certificate, as described in § 1.1441–1(e)(3)(ii), for amounts for which it claims a reduced rate of withholding under an income tax treaty on behalf of its interest holders.

(iii) *Dual treatment*. Under paragraph (b)(2)(i) of this section, a withholding agent may make a payment to a foreign entity that is simultaneously claiming to be the beneficial owner of a portion of the income (whether or not it is also claiming a reduced rate of tax

on its own behalf) and a reduced rate on behalf of persons in their capacity as interest holders in the entity with respect to the same, or a different, portion of the income. If the same portion of a payment may be reliably associated with both the entity's claim and an interest holder's claim, the withholding agent may choose to reject both claims and request new documentation and information allocating the payment among the beneficial owners of the payment or the withholding agent may choose which claim to apply. If the entity and the interest holder's claims are reliably associated with separate portions of the payment, the withholding agent may, at its option, accept such dual claims based on withholding certificates or other appropriate documentation furnished by the entity and its interest holders with respect to their respective shares of the payment even though this will result in the withholding agent treating the entity differently with respect to different portions of the same payment. Alternatively, the withholding agent may choose to apply only the claim made by the entity, provided the entity may be treated as a beneficial owner of the income. If the withholding agent does not accept claims for a reduced rate of withholding presented by any one or more of the interest holders, or by the entity, any interest holder or the entity may subsequently claim a refund or credit of any amount so withheld to the extent the interest holder's or entity's share of such withholding exceeds the amount of tax due.

(iv) *Examples.* The following examples illustrate the rules of this paragraph (b)(2):

Example 1. (i) *Facts.* Entity E is a business organization formed under the laws of country Y. Country Y has an income tax treaty with the United States. The treaty contains a limitation on benefits provision. E receives U.S. source royalties from withholding agent W and claims a reduced rate of withholding under the U.S.-Y tax treaty on its own behalf (rather than on behalf of its interest holders). E furnishes a beneficial owner withholding certificate described in paragraph (b)(1) of this section that represents that E is a resident of country Y (within the meaning of the U.S.-Y tax treaty), is the beneficial owner of the income, derives the income under section 894 and the regulations thereunder, and is not precluded from claiming benefits by the treaty's limitation on benefits provision.

(ii) *Analysis.* Absent actual knowledge or reason to know otherwise, W may rely on the representations made by E to apply a reduced rate of withholding.

Example 2. (i) *Facts.* The facts are the same as under *Example 1,* except that one of E's interest holders, H, is an entity organized in country Z. The U.S.-Z tax treaty reduces the rate on royalties to zero whereas the rate on royalties under the U.S.-Y tax treaty applicable to E is 5 percent. H is not fiscally transparent under country Z's tax law with respect to such income. H furnishes a beneficial owner withholding certificate to E that represents that H derives, within the meaning of section 894 and the regulations thereunder, its share of the royalty income paid to E as a resident of country Z, is the beneficial owner of the royalty income, and is not precluded from claiming treaty benefits by virtue of the limitation on benefits provision in the U.S.-Z treaty. E furnishes to W a flow-through withholding certificate described in §1.1441–1(e)(3)(i) to which it attaches H's beneficial owner withholding certificate and a withholding statement for the portion of the payment that H claims as its distributive share of the royalty income. E also furnishes to W a beneficial owner withholding certificate for itself for the portion of the payment that H does not claim as its distributive share.

(ii) *Analysis.* Absent actual knowledge or reason to know otherwise, W may rely on the documentation furnished by E to treat the royalty payment to a single foreign entity (E) as derived by different residents of tax treaty countries as a result of the claims presented under different treaties. W may, at its option, grant dual treatment, that is, a reduced rate of zero percent under the U.S.-Z treaty on the portion of the royalty payment that H claims to derive as a resident of country Z and a reduced rate of 5 percent under the U.S.-Y treaty for the balance. However, under paragraph (b)(2)(iii) of this section, W may, at its option, treat E as the only relevant person deriving the royalty and grant benefits under the U.S.-Y treaty only.

Example 3. (i) *Facts.* E is a business organization formed under the laws of country X. Country X has an income tax treaty with the United States. E has two interest holders, H1, organized in country Y, and H2, organized in country Z. E receives from W, a U.S. withholding agent, U.S. source royalties and interest that is eligible for the portfolio interest exception under sections 871(h) and 881(c), provided W receives the appropriate beneficial owner statement required under section 871(h)(5). E is classified as a corporation under U.S. tax law principles. Country X, E's country of organization, treats E as an entity that is not fiscally transparent with

respect to items of income under the regulations under section 894. Under the U.S.-X income tax treaty, royalties are subject to 5 percent rate of withholding. Country Y, H1's country of organization, treats E as fiscally transparent with respect to items of income under section 894 and H1 as not fiscally transparent with respect to items of income. Under the country Y-U.S. income tax treaty, royalties are exempt from U.S. tax. Country Z, H2's country of organization, treats E as not fiscally transparent under section 894 with respect to items of income. E provides W with a flow-through beneficial owner withholding certificate with which it associates a beneficial owner withholding certificate from H1. H1's withholding certificate states that H1 is a resident of country Y, derives the royalty income under section 894, meets the applicable limitations on benefits provisions of the U.S.-Y treaty, and is the beneficial owner of the income. The withholding statement attached to E's flow-through withholding certificate allocates one-half of the royalty payment to H1. E also provides W with a beneficial owner withholding certificate for the interest income and the remaining one-half of the royalty income. The withholding certificate states that E is a resident of country X, derives the royalty income under section 894, meets the limitation on benefits provisions of the U.S.-X treaty, and is the beneficial owner of the income.

(ii) *Analysis.* Absent actual knowledge or reason to know that the claims are incorrect, W may treat one-half of the royalty derived by E as subject to a 5 percent withholding rate and one-half of the royalty as derived by H1 and subject to no withholding. Further, it may treat all of the interest as being paid to E and as qualifying for the portfolio interest exception. W can, at its option, treat the entire royalty as paid to E and subject it to withholding at a 5 percent rate of withholding. In that case, H1 would be entitled to claim a refund with respect to its one-half of the royalty.

(3) *Certified TIN.* The IRS may issue guidance requiring a foreign person claiming treaty benefits and for whom a TIN is required to establish with the IRS, at the time the TIN is requested or after the TIN is issued, that the person is a resident in a treaty country and meets other conditions (such as limitation on benefits provisions) of the treaty. See §601.601(d)(2) of this chapter.

(4) *Claim of benefits under an income tax treaty by a U.S. person.* In certain cases, a U.S. person may claim the benefit of an income tax treaty. For example, under certain treaties, a U.S. citizen residing in the treaty country may claim a reduced rate of U.S. tax on certain amounts representing a pension or an annuity from U.S. sources. Claims of treaty benefits by a U.S. person may be made by furnishing a Form W–9 to the withholding agent or such other form as the IRS may prescribe in published guidance (see §601.601(d)(2) of this chapter).

(c) *Exemption from requirement to furnish a taxpayer identifying number and special documentary evidence rules for certain income*—(1) *General rule.* In the case of income described in paragraph (c)(2) of this section, a withholding agent may rely on a beneficial owner withholding certificate described in paragraph (b)(1) of this section without regard to the requirement that the withholding certificate include the beneficial owner's taxpayer identifying number. In the case of payments of income described in paragraph (c)(2) of this section made outside the United States (as defined in §1.6049–5(e)) with respect to an offshore account (as defined in §1.6049–5(c)(1)), a withholding agent may, as an alternative to a withholding certificate described in paragraph (b)(1) of this section, rely on a certificate of residence described in paragraph (c)(3) of this section or documentary evidence described in paragraph (c)(4) of this section, relating to the beneficial owner, that the withholding agent has reviewed and maintains in its records in accordance with §1.1441-1(e)(4)(iii). In the case of a payment to a person other than an individual, the certificate of residence or documentary evidence must be accompanied by the statements described in paragraphs (c)(5)(i) and (ii) of this section regarding limitation on benefits and whether the amount paid is derived by such person or by one of its interest holders. The withholding agent maintains the reviewed documents by retaining either the documents viewed or a photocopy thereof and noting in its records the date on which, and by whom, the documents were received and reviewed. This paragraph (c)(1) shall not apply to amounts that are exempt from withholding based on a claim that the income is effectively connected with the conduct of a trade or business in the United States.

(2) *Income to which special rules apply.* The income to which paragraph (c)(1) of this section applies is dividends and interest from stocks and debt obligations that are actively traded, dividends from any redeemable security issued by an investment company registered under the Investment Company Act of 1940 (15 U.S.C. 80a–1), dividends, interest, or royalties from units of beneficial interest in a unit investment trust that are (or were upon issuance) publicly offered and are registered with the Securities and Exchange Commission under the Securities Act of 1933 (15 U.S.C. 77a) and amounts paid with respect to loans of securities described in this paragraph (c)(2). For purposes of this paragraph (c)(2), a stock or debt obligation is actively traded if it is actively traded within the meaning of section 1092(d) and § 1.1092(d)–1 when documentation is provided.

(3) *Certificate of residence.* A certificate of residence referred to in paragraph (c)(1) of this section is a certification issued by an appropriate tax official of the treaty country of which the taxpayer claims to be a resident that the taxpayer has filed its most recent income tax return as a resident of that country (within the meaning of the applicable tax treaty). The certificate of residence must have been issued by such official within three years prior to its being presented to the withholding agent, or such other period as the IRS may prescribe in published guidance (see § 601.601(d)(2) of this chapter). See § 1.1441–1(e)(4)(ii)(A) for the period during which a withholding agent may rely on a certificate of residence. The competent authorities may agree to a different procedure for certifying residence, in which case such procedure shall govern for payments made to a person claiming to be a resident of the country with which such an agreement is in effect.

(4) *Documentary evidence establishing residence in the treaty country*—(i) *Individuals.* For an individual, the documentary evidence referred to in paragraph (c)(1) of this section is any documentation that includes the individuals name, address, and photograph, is an official document issued by an authorized governmental body (*i.e.,* a government or agency thereof, or a municipality), and has been issued no more than three years prior to presentation to the withholding agent. A document older than three years may be relied upon as proof of residence only if it is accompanied by additional evidence of the person's residence in the treaty country (*e.g.*, a bank statement, utility bills, or medical bills). Documentary evidence must be in the form of original documents or certified copies thereof.

(ii) *Persons other than individuals.* For a person other than an individual, the documentary evidence referred to in paragraph (c)(1) of this section is any documentation that includes the name of the entity and the address of its principal office in the treaty country, and is an official document issued by an authorized governmental body (*e.g.*, a government or agency thereof, or a municipality).

(5) *Statements regarding entitlement to treaty benefits*—(i) *Statement regarding conditions under a limitation on benefits provision.* In addition to the documentary evidence described in (c)(4)(ii) of this section, a taxpayer that is not an individual must provide a statement that it meets one or more of the conditions set forth in the limitation on benefits article (if any, or in a similar provision) contained in the applicable tax treaty.

(ii) *Statement regarding whether the taxpayer derives the income.* A taxpayer that is not an individual must also provide, in addition to the documentary evidence and the statement described in paragraph (c)(5)(i) of this section, a statement that any income for which it intends to claim benefits under an applicable income tax treaty is income that will properly be treated as derived by itself as a resident of the applicable treaty jurisdiction within the meaning of section 894 and the regulations thereunder. This requirement does not apply if the taxpayer furnishes a certificate of residence that certifies that fact.

(d) *Joint owners.* In the case of a payment to joint owners, each owner must furnish a withholding certificate or, if applicable, documentary evidence or a certificate of residence. The applicable

rate of withholding on a payment of income to joint owners shall be the highest applicable rate.

(e) *Competent authority*. The procedures described in this section may be modified to the extent the U.S. competent authority may agree with the competent authority of a country with which the United States has an income tax treaty in effect.

(f) *Failure to receive withholding certificate timely*. See applicable procedures described in §1.1441–1(b)(7) in the event the withholding agent does not hold an appropriate withholding certificate or other appropriate documentation at the time of payment.

(g) *Effective date*—(1) *General rule*. This section applies to payments made after December 31, 2000.

(2) *Transition rules*. For purposes of this section, the validity of a Form 1001 or 8233 that was valid on January 1, 1998, under the regulations in effect prior to January 1, 2001 (see 26 CFR parts 1 and 35a, revised April 1, 1999) and expired, or will expire, at any time during 1998, is extended until December 31, 1998. The validity of a Form 1001 or 8233 that is valid on or after January 1, 1999, remains valid until its validity expires under the regulations in effect prior to January 1, 2001 (see 26 CFR parts 1 and 35a, revised April 1, 1999) but in no event will such a form remain valid after December 31, 2000. The rule in this paragraph (g)(2), however, does not apply to extend the validity period of a Form 1001 or 8233 that expires solely by reason of changes in the circumstances of the person whose name is on the certificate or in interpretation of the law under the regulations under §1.894–1T(d). Notwithstanding the first three sentences of this paragraph (g)(2), a withholding agent may choose to not take advantage of the transition rule in this paragraph (g)(2) with respect to one or more withholding certificates valid under the regulations in effect prior to January 1, 2001 (see 26 CFR parts 1 and 35a, revised April 1, 1999) and, therefore, to require withholding certificates conforming to the requirements described in this section (new withholding certificates). For purposes of this section, a new withholding certificate is deemed to satisfy the documentation requirement under the regulations in effect prior to January 1, 2001 (see 26 CFR parts 1 and 35a, revised April 1, 1999). Further, a new withholding certificate remains valid for the period specified in §1.1441–1(e)(4)(ii), regardless of when the certificate is obtained.

[T.D. 8734, 62 FR 53458, Oct. 14, 1997, as amended by T.D. 8804, 63 FR 72185, 72188, Dec. 31, 1998; T.D. 8856, 64 FR 73410, Dec. 30, 1999; 65 FR 16320, Mar. 28, 2000; T.D. 8881, 65 FR 32194, May 22, 2000]

§1.1441–7 General provisions relating to withholding agents.

(a) *Withholding agent defined*—(1) *In general*. For purposes of chapter 3 of the Internal Revenue Code and the regulations under such chapter, the term *withholding agent* means any person, U.S. or foreign, that has the control, receipt, custody, disposal, or payment of an item of income of a foreign person subject to withholding, including (but not limited to) a foreign intermediary described in §1.1441–1(e)(3)(i), a foreign partnership, or a U.S. branch described in §1.1441–1(b)(2)(iv)(A) or (E). See §§1.1441–1(b)(2) and (3) and 1.1441–5(c), (d), and (e), for rules to determine whether a payment is considered made to a foreign person. Any person who meets the definition of a withholding agent is required to deposit any tax withheld under §1.1461–1(a) and to make the returns prescribed by §1.1461–1(b) and (c), except as otherwise may be required by a qualified intermediary withholding agreement, a withholding foreign partnership agreement, or a withholding foreign trust agreement. When several persons qualify as withholding agents with respect to a single payment, only one tax is required to be withheld and deposited. See §1.1461–1. A person who, as a nominee described in §1.6031(c)–1T, has furnished to a partnership all of the information required to be furnished under §1.6031(c)–1T(a) shall not be treated as a withholding agent if it has notified the partnership that it is treating the provision of information to the partnership as a discharge of its obligations as a withholding agent.

(2) *Examples*. The following examples illustrate the rules of paragraph (a)(1) of this section:

Example 1. USB is a broker organized in the United States. USB pays U.S. source dividends and interest, which are amounts subject to withholding under §1.1441–2(a), to FC, a foreign corporation that has an investment account with USB. USB is a withholding agent as defined in paragraph (a)(1) of this section.

Example 2. USB is a bank organized in the United States. FB is a bank organized in country X. X has an omnibus account with USB through which FB invests in debt and equity instruments that pay amounts subject to withholding as defined in §1.1441–2(a). FB is a nonqualified intermediary, as defined in §1.1441–1(c)(14). Both USB and FB are withholding agents as defined in paragraph (a)(1) of this section.

Example 3. The facts are the same as in Example 2, except that FB is a qualified intermediary. Both USB and FB are withholding agents as defined in paragraph (a)(1) of this section.

Example 4. FB is a bank organized in country X. FB has a branch in the United States. FB's branch has customers that are foreign persons who receive amounts subject to withholding, as defined in §1.1441–2(a). FB is a withholding agent under paragraph (a)(1) of this section and is required to withhold and report payments of amounts subject to withholding in accordance with chapter 3 of the Internal Revenue Code.

Example 5. X is a foreign corporation. X pays dividends to shareholders who are foreign persons. Under section 861(a)(2)(B), a portion of the dividends are from sources within the United States and constitute amounts subject to withholding within the meaning of §1.1441–2(a). The dividends are not subject to tax under section 884(a). See 884(e)(3). X is a withholding agent under paragraph (a)(1) of this section.

(b) *Standards of knowledge*—(1) *In general.* A withholding agent must withhold at the full 30-percent rate under section 1441, 1442, or 1443(a) or at the full 4-percent rate under section 1443(b) if it has actual knowledge or reason to know that a claim of U.S. status or of a reduced rate of withholding under section 1441, 1442, or 1443 is unreliable or incorrect. A withholding agent shall be liable for tax, interest, and penalties to the extent provided under sections 1461 and 1463 and the regulations under those sections if it fails to withhold the correct amount despite its actual knowledge or reason to know the amount required to be withheld. For purposes of the regulations under sections 1441, 1442, and 1443, a withholding agent may rely on information or certifications contained in, or associated with, a withholding certificate or other documentation furnished by or for a beneficial owner or payee unless the withholding agent has actual knowledge or reason to know that the information or certifications are incorrect or unreliable and, if based on such knowledge or reason to know, it should withhold (under chapter 3 of the Code or another withholding provision of the Code) an amount greater than would be the case if it relied on the information or certifications, or it should report (under chapter 3 of the Code or under another provision of the Code) an amount that would not otherwise be reportable if it relied on the information or certifications. See §1.1441–1(e)(4)(viii) for applicable reliance rules. A withholding agent that has received notification by the Internal Revenue Service (IRS) that a claim of U.S. status or of a reduced rate is incorrect has actual knowledge beginning on the date that is 30 calendar days after the date the notice is received. A withholding agent that fails to act in accordance with the presumptions set forth in §§1.1441–1(b)(3), 1.1441–4(a), 1.1441–5 (d) and (e), or 1.1441–9(b)(3) may also be liable for tax, interest, and penalties. See §1.1441–1(b)(3)(ix) and (7).

(2) *Reason to know.* A withholding agent shall be considered to have reason to know if its knowledge of relevant facts or of statements contained in the withholding certificates or other documentation is such that a reasonably prudent person in the position of the withholding agent would question the claims made.

(3) *Financial institutions—limits on reason to know.* For purposes of this paragraph (b)(3) and paragraphs (b)(4) through (b)(10) of this section, the terms *withholding certificate, documentary evidence,* and *documentation* are defined in §1.1441–1(c)(16), (17) and (18). Except as otherwise provided in paragraphs (b)(4) through (b)(9) of this section, a withholding agent that is a financial institution (including a regulated investment company) that has a direct account relationship with a beneficial owner (a direct account holder) has a reason to know, with respect to amounts described in §1.1441–6(c)(2),

that documentation provided by the direct account holder is unreliable or incorrect only if one or more of the circumstances described in paragraphs (b)(4) through (b)(9) of this section exist. If a direct account holder has provided documentation that is unreliable or incorrect under the rules of paragraph (b)(4) through (b)(9) of this section, the withholding agent may require new documentation. Alternatively, the withholding agent may rely on the documentation originally provided if the rules of paragraphs (b)(4) through (b)(9) of this section permit such reliance based on additional statements and documentation. Paragraph (b)(10) of this section provides limits on reason to know for financial institutions that receive beneficial owner documentation from persons (indirect account holders) that have an account relationship with, or an ownership interest in, a direct account holder. For rules regarding reliance on Form W–9, see §31.3406(g)-3(e)(2) of this chapter.

(4) *Rules applicable to withholding certificates*—(i) *In general.* A withholding agent has reason to know that a beneficial owner withholding certificate provided by a direct account holder in connection with a payment of an amount described in §1.1441–6(c)(2) is unreliable or incorrect if the withholding certificate is incomplete with respect to any item on the certificate that is relevant to the claims made by the direct account holder, the withholding certificate contains any information that is inconsistent with the direct account holder's claim, the withholding agent has other account information that is inconsistent with the direct account holder's claim, or the withholding certificate lacks information necessary to establish entitlement to a reduced rate of withholding. For purposes of establishing a direct account holder's status as a foreign person or resident of a treaty country a withholding certificate shall be considered unreliable or inconsistent with an account holder's claims only if it is not reliable under the rules of paragraphs (b)(5) and (6) of this section. A withholding agent that relies on an agent to review and maintain a withholding certificate is considered to know or have reason to know the facts within the knowledge of the agent.

(ii) *Examples.* The rules of paragraph (b)(4) of this section are illustrated by the following examples:

Example 1. F, a foreign person that has a direct account relationship with USB, a bank that is a U.S. person, provides USB with a beneficial owner withholding certificate for the purpose of claiming a reduced rate of withholding on U.S. source dividends. F resides in a treaty country that has a limitation on benefits provision in its income tax treaty with the United States. The withholding certificate, however, does not contain a statement regarding limitations on benefits or deriving the income under section 894 as required by §1.1441–6(b)(1). USB cannot rely on the withholding certificate to grant a reduced rate of withholding because it is incomplete with respect to the claim made by F.

Example 2. F, a foreign person that has a direct account relationship with USB, a broker that is a U.S. person, provides USB with a withholding certificate for the purpose of claiming the portfolio interest exception under section 881(c), which applies to foreign corporations. F indicates on its withholding certificate, however, that it is a partnership. USB may not treat F as a beneficial owner of the interest for purposes of the portfolio interest exception because F has indicated on its withholding certificate that it is a foreign partnership, and therefore under §1.1441–1(c)(6)(ii) it is not the beneficial owner of the interest payment.

(5) *Withholding certificate—establishment of foreign status.* A withholding agent has reason to know that a beneficial owner withholding certificate (as defined in §1.1441–1(e)(2)) provided by a direct account holder in connection with a payment of an amount described in §1.1441–6(c)(2) is unreliable or incorrect for purposes of establishing the account holder's status as a foreign person if the certificate is described in paragraph (b)(5)(i) or (ii) of this section.

(i) A withholding certificate is unreliable or incorrect if the withholding certificate has a permanent residence address (as defined in §1.1441–1(e)(2)(ii)) in the United States, the withholding certificate has a mailing address in the United States, the withholding agent has a residence or mailing address as part of its account information that is an address in the United States, or the direct account holder notifies the withholding agent of a new residence or

mailing address in the United States (whether or not provided on a withholding certificate). A withholding agent may, however, rely on the beneficial owner withholding certificate as establishing the account holder's foreign status if it may do so under the provisions of paragraph (b)(5)(i)(A) or (B) of this section.

(A) A withholding agent may treat a direct account holder as a foreign person if the beneficial owner withholding certificate has been provided by an individual and—

(*1*) The withholding agent has in its possession or obtains documentary evidence (which does not contain a U.S. address) that has been provided within the past three years, was valid at the time it was provided, the documentary evidence supports the claim of foreign status, and the direct account holder provides the withholding agent with a reasonable explanation, in writing, supporting the account holder's foreign status; or

(*2*) The account is maintained at an office of the withholding agent outside the United States and the withholding agent is required to report annually a payment to the direct account holder on a tax information statement that is filed with the tax authority of the country in which the office is located and that country has an income tax treaty in effect with the United States.

(B) A withholding agent may treat an account holder as a foreign person if the beneficial owner withholding certificate has been provided by an entity that the withholding agent does not know, or does not have reason to know, is a flow-through entity and—

(*1*) The withholding agent has in its possession, or obtains, documentation that substantiates that the entity is actually organized or created under the laws of a foreign country; or

(*2*) The account is maintained at an office of the withholding agent outside the United States and the withholding agent is required to report annually a payment to the direct account holder on a tax information statement that is filed with the tax authority of the country in which the office is located and that country has an income tax treaty in effect with the United States.

(ii) A beneficial owner withholding certificate is unreliable or incorrect if it is provided with respect to an offshore account (as defined in §1.6049–5(c)(1)) and the direct account holder has standing instructions directing the withholding agent to pay amounts from its account to an address or an account maintained in the United States. The withholding agent may treat the direct account holder as a foreign person, however, if the direct account holder provides a reasonable explanation in writing that supports its foreign status.

(6) *Withholding certificate—claim of reduced rate of withholding under treaty.* A withholding agent has reason to know that a withholding certificate (other than Form W–9) provided by a direct account holder in connection with a payment of an amount described in §1.1441–6(c)(2) is unreliable or incorrect for purposes of establishing that the direct account holder is a resident of a country with which the United States has an income tax treaty if it is described in paragraphs (b)(6)(i) through (iii) of this section.

(i) A beneficial owner withholding certificate is unreliable or incorrect if the permanent residence address on the beneficial owner withholding certificate is not in the country whose treaty is invoked, or the direct account holder notifies the withholding agent of a new permanent residence address that is not in the treaty country. A withholding agent may, however, treat a direct account holder as entitled to a reduced rate of withholding under an income tax treaty if the direct account holder provides a reasonable explanation for the permanent residence address outside the treaty country (e.g., the address is the address of a branch of the beneficial owner located outside the treaty country in which the entity is a resident) or the withholding agent has in its possession, or obtains, documentary evidence that establishes residency in a treaty country.

(ii) A beneficial owner withholding certificate is unreliable or incorrect if the permanent residence address on the withholding certificate is in the applicable treaty country but the withholding certificate contains a mailing address outside the treaty country or

the withholding agent has a mailing address as part of its account information that is outside the treaty country. A mailing address that is a P.O. Box, in-care-of address, or address at a financial institution (if the financial institution is not a beneficial owner) shall not preclude a withholding agent from treating the direct account holder as a resident of a treaty country if such address is in the treaty country. If a withholding agent has a mailing address (whether or not contained on the withholding certificate) outside the applicable treaty country, the withholding agent may nevertheless treat a direct account holder as a resident of an applicable treaty country if—

(A) The withholding agent has in its possession, or obtains, additional documentation supporting the direct account holder's claim of residence in the applicable treaty country (and the additional documentation does not contain an address outside the treaty country);

(B) The withholding agent has in its possession, or obtains, documentation that establishes that the direct account holder is an entity organized in a treaty country (or an entity managed and controlled in a treaty country, if the applicable treaty so requires);

(C) The withholding agent knows that the address outside the applicable treaty country (other than a P.O. box, or in-care-of address) is a branch of a bank or insurance company that is a resident of the applicable treaty country; or

(D) The withholding agent obtains a written statement from the direct account holder that reasonably establishes entitlement to treaty benefits.

(iii) A beneficial owner withholding certificate is unreliable or incorrect to establish entitlement to a reduced rate of withholding under an income tax treaty if the direct account holder has standing instructions for the withholding agent to pay amounts from its account to an address or an account outside the treaty country unless the direct account holder provides a reasonable explanation, in writing, establishing the direct account holder's residence in the applicable treaty country.

(7) *Documentary evidence.* A withholding agent shall not treat documentary evidence provided by a direct account holder as valid if the documentary evidence does not reasonably establish the identity of the person presenting the documentary evidence. For example, documentary evidence is not valid if it is provided in person by a direct account holder that is a natural person and the photograph or signature on the documentary evidence, if any, does not match the appearance or signature of the person presenting the document. A withholding agent shall not rely on documentary evidence to reduce the rate of withholding that would otherwise apply under the presumption rules of §§1.1441–1(b)(3), 1.1441–5(d) and (e)(6), and 1.6049–5(d) if the documentary evidence contains information that is inconsistent with the direct account holder's claim of a reduced rate of withholding, the withholding agent has other account information that is inconsistent with the direct account holder's claim, or the documentary evidence lacks information necessary to establish entitlement to a reduced rate of withholding. For example, if a direct account holder provides documentary evidence to claim treaty benefits and the documentary evidence establishes the direct account holder's status as a foreign person and a resident of a treaty country, but the account holder fails to provide the treaty statements required by §1.1441–6(c)(5), the documentary evidence does not establish the direct account holder's entitlement to a reduced rate of withholding. For purposes of establishing a direct account holder's status as a foreign person or resident of a country with which the United States has an income tax treaty with respect to income described in §1.1441–6(c)(2), documentary evidence shall be considered unreliable or incorrect only if it is not reliable under the rules of paragraph (b)(8) and (9) of this section.

(8) *Documentary evidence—establishment of foreign status.* A withholding agent has reason to know that documentary evidence provided in connection with a payment of an amount described in §1.1441–6(c)(2) is unreliable or incorrect for purposes of establishing the direct account holder's status as a

foreign person if the documentary evidence is described in paragraphs (b)(8)(i), (ii), (iii) or (iv) of this section.

(i) A withholding agent shall not treat documentary evidence provided by an account holder after December 31, 2000, as valid for purposes of establishing the direct account holder's foreign status if the only mailing or residence address that is available to the withholding agent is an address at a financial institution (unless the financial institution is a beneficial owner of the income), an in-care-of address, or a P.O. box. In this case, the withholding agent must obtain additional documentation that is sufficient to establish the direct account holder's status as a foreign person. A withholding agent shall not treat documentary evidence provided by an account holder before January 1, 2001, as valid for purposes of establishing a direct account holder's status as a foreign person if it has actual knowledge that the direct account holder is a U.S. person or if it has a mailing or residence address for the direct account holder in the United States. If a withholding agent has an address for the direct account holder in the United States, the withholding agent may nevertheless treat the direct account holder as a foreign person if it can so treat the direct account holder under the rules of paragraph (b)(8)(ii) of this section.

(ii) Documentary evidence is unreliable or incorrect to establish a direct account holder's status as a foreign person if the withholding agent has a mailing or residence address (whether or not on the documentation) for the direct account holder in the United States or if the direct account holder notifies the withholding agent of a new address in the United States. A withholding agent may, however, rely on documentary evidence as establishing the direct account holder's foreign status if it may do so under the provisions of paragraph (b)(8)(ii)(A) or (B) of this section.

(A) A withholding agent may treat a direct account holder that is an individual as a foreign person even if it has a mailing or residence address for the direct account holder in the United States if the withholding agent—

(*1*) Has in its possession or obtains additional documentary evidence (which does not contain a U.S. address) supporting the claim of foreign status and a reasonable explanation in writing supporting the account holder's foreign status;

(*2*) Has in its possession or obtains a valid beneficial owner withholding certificate on Form W–8 and the Form W–8 contains a permanent residence address outside the United States and a mailing address outside the United States (or if a mailing address is inside the United States the direct account holder provides a reasonable explanation in writing supporting the direct account holder's foreign status); or

(*3*) The account is maintained at an office of the withholding agent outside the United States and the withholding agent is required to report annually a payment to the direct account holder on a tax information statement that is filed with the tax authority of the country in which the office is located and that country has an income tax treaty in effect with the United States.

(B) A withholding agent may treat a direct account holder that is an entity (other than a flow-through entity) as a foreign person even if it has a mailing or residence address for the direct account holder in the United States if the withholding agent—

(*1*) Has in its possession, or obtains, documentation that substantiates that the entity is actually organized or created under the laws of a foreign country;

(*2*) Obtains a valid beneficial owner withholding certificate on Form W–8 and the Form W–8 contains a permanent residence address outside the United States and a mailing address outside the United States (or if a mailing address is inside the United States the direct account holder provides additional documentary evidence sufficient to establish the direct account holder's foreign status); or

(*3*) The account is maintained at an office of the withholding agent outside the United States and the withholding agent is required to report annually a payment to the direct account holder on a tax information statement that is filed with the tax authority of the country in which the office is located

and that country has an income tax treaty in effect with the United States.

(iii) Documentary evidence is unreliable or incorrect if the direct account holder has standing instructions directing the withholding agent to pay amounts from its account to an address or an account maintained in the United States. The withholding agent may treat the direct account holder as a foreign person, however, if the account holder provides a reasonable explanation in writing that supports its foreign status.

(9) *Documentary evidence—claim of reduced rate of withholding under treaty.* A withholding agent has reason to know that documentary evidence provided in connection with a payment of an amount described in §1.1441–6(c)(2) is unreliable or incorrect for purposes of establishing that a direct account holder is a resident of a country with which the United States has an income tax treaty if it is described in paragraph (b)(9)(i) or (ii) of this section.

(i) Documentary evidence is unreliable or incorrect if the withholding agent has a mailing or residence address for the direct account holder (whether or not on the documentary evidence) that is outside the applicable treaty country, or the only address that the withholding agent has (whether in or outside of the applicable treaty country) is a P.O. box, an in-care-of address, or the address of a financial institution (if the financial institution is not the beneficial owner). If a withholding agent has a mailing or residence address for the direct account holder outside the applicable treaty country, the withholding agent may nevertheless treat a direct account holder as a resident of an applicable treaty country if the withholding agent—

(A) Has in its possession, or obtains, additional documentary evidence supporting the direct account holder's claim of residence in the applicable treaty country (and the documentary evidence does not contain an address outside the applicable treaty country, a P.O. box, an in-care-of address, or the address of a financial institution);

(B) Has in its possession, or obtains, documentary evidence that establishes the direct account holder is an entity organized in a treaty country (or an entity managed and controlled in a treaty country, if the applicable treaty so requires); or

(C) Obtains a valid beneficial owner withholding certificate on Form W–8 that contains a permanent residence address and a mailing address in the applicable treaty country.

(ii) Documentary evidence is unreliable or incorrect if the direct account holder has standing instructions directing the withholding agent to pay amounts from its account to an address or an account maintained outside the treaty country unless the direct account holder provides a reasonable explanation, in writing, establishing the direct account holder's residence in the applicable treaty country.

(10) *Limits on reason to know—indirect account holders.* A financial institution that receives documentation from a payee through a nonqualified intermediary, a flow-through entity, or a U.S. branch described in §1.1441–1(b)(2)(iv) (other than a U.S. branch that is treated as a U.S. person) with respect to a payment of an amount described in §1.1441–6(c)(2) has reason to know that the documentation is unreliable or incorrect if a reasonably prudent person in the position of a withholding agent would question the claims made. This standard requires, but is not limited to, a withholding agent's compliance with the rules of paragraphs (b)(10)(i) through (iii).

(i) The withholding agent must review the withholding statement described in §1.1441–1(e)(3)(iv) and may not rely on information in the statement to the extent the information does not support the claims made for any payee. For this purpose, a withholding agent may not treat a payee as a foreign person if an address in the United States is provided for such payee and may not treat a person as a resident of a country with which the United States has an income tax treaty if the address for that person is outside the applicable treaty country. Notwithstanding a U.S. address or an address outside a treaty country, the withholding agent may treat a payee as a foreign person or a foreign person as a resident of a treaty country if a reasonable explanation is provided, in

writing, by the nonqualified intermediary, flow-through entity, or U.S. branch supporting the payee's foreign status or the foreign person's residency in a treaty country.

(ii) The withholding agent must review each withholding certificate in accordance with the requirements of paragraphs (b)(5) and (6) of this section and verify that the information on the withholding certificate is consistent with the information on the withholding statement required under §1.1441–1(e)(3)(iv). If there is a discrepancy between the withholding certificate and the withholding statement, the withholding agent may choose to rely on the withholding certificate, if valid, and instruct the nonqualified intermediary, flow-through entity, or U.S. branch to correct the withholding statement or apply the presumption rules of §§1.1441–1(b), 1.1441–5(d) and (e)(6), and 1.6049–5(d) to the payment allocable to the payee who provided the withholding certificate. A withholding agent that receives a withholding certificate before December 31, 2001, is not required to review the information on withholding certificates or determine if it is consistent with the information on the withholding statement until December 31, 2001. A withholding agent may withhold and report in accordance with a withholding statement until December 31, 2001, unless it has actually performed the verification procedures required by this paragraph (b)(10)(ii) and determined that the withholding statement is inaccurate with respect to a particular payee.

(iii) The withholding agent must review the documentary evidence provided by the nonqualified intermediary, flow-through entity, or U.S. branch to determine that there is no obvious indication that the payee is a U.S. non-exempt recipient or that the documentary evidence does not establish the identity of the person who provided the documentation (*e.g.*, the documentary evidence does not appear to be an identification document).

(11) *Additional guidance.* The IRS may prescribe other circumstances for which a withholding certificate or documentary evidence is unreliable or incorrect in addition to the circumstances described in paragraph (b) of this section to establish an account holder's status as a foreign person or a beneficial owner entitled to a reduced rate of withholding in published guidance (see §601.601(d)(2) of this chapter).

(c) *Authorized agent*—(1) *In general.* The acts of an agent of a withholding agent (including the receipt of withholding certificates, the payment of amounts of income subject to withholding, and the deposit of tax withheld) are imputed to the withholding agent on whose behalf it is acting. However, if the agent is a foreign person, a withholding agent that is a U.S. person may treat the acts of the foreign agent as its own for purposes of determining whether it has complied with the provisions of this section, but only if the agent is an authorized foreign agent, as defined in paragraph (c)(2) of this section. An authorized foreign agent cannot apply the provisions of this paragraph (c) to appoint another person its authorized foreign agent with respect to the payments it receives from the withholding agent.

(2) *Authorized foreign agent.* An agent is an authorized foreign agent only if—

(i) There is a written agreement between the withholding agent and the foreign person acting as agent;

(ii) The notification procedures described in paragraph (c)(3) of this section have been complied with;

(iii) Books and records and relevant personnel of the foreign agent are available (on a continuous basis, including after termination of the relationship) for examination by the IRS in order to evaluate the withholding agent's compliance with the provisions of chapters 3 and 61 of the Code, section 3406, and the regulations under those provisions; and

(iv) The U.S. withholding agent remains fully liable for the acts of its agent and does not assert any of the defenses that may otherwise be available, including under common law principles of agency in order to avoid tax liability under the Internal Revenue Code.

(3) *Notification.* A withholding agent that appoints an authorized agent to act on its behalf for purposes of §1.871–14(c)(2), the withholding provisions of chapter 3 of the Code, section 3406 or

other withholding provisions of the Internal Revenue Code, or the reporting provisions of chapter 61 of the Code, is required to file notice of such appointment with the Office of the Assistant Commissioner (International). Such notice shall be filed before the first payment for which the authorized agent acts as such. Such notice shall acknowledge the withholding agent liability as provided in paragraph (c)(2)(iv) of this section.

(4) *Liability of U.S. withholding agent.* An authorized foreign agent is subject to the same withholding and reporting obligations that apply to any withholding agent under the provisions of chapter 3 of the Code and the regulations thereunder. In particular, an authorized foreign agent does not benefit from the special procedures or exceptions that may apply to a qualified intermediary. A withholding agent acting through an authorized foreign agent is liable for any failure of the agent, such as failure to withhold an amount or make payment of tax, in the same manner and to the same extent as if the agent's failure had been the failure of the U.S. withholding agent. For this purpose, the foreign agent's actual knowledge or reason to know shall be imputed to the U.S. withholding agent. The U.S. withholding agent's liability shall exist irrespective of the fact that the authorized foreign agent is also a withholding agent and is itself separately liable for failure to comply with the provisions of the regulations under section 1441, 1442, or 1443. However, the same tax, interest, or penalties shall not be collected more than once.

(5) *Filing of returns.* See §1.1461–1(b)(2)(iii) and (c)(4)(iii) regarding returns required to be made where a U.S. withholding agent acts through an authorized foreign agent.

(d) *United States obligations.* If the United States is a withholding agent for an item of interest, including original issue discount, on obligations of the United States or of any agency or instrumentality thereof, the withholding obligation of the United States is assumed and discharged by—

(1) The Commissioner of the Public Debt, for interest paid by checks issued through the Bureau of the Public Debt;

(2) The Treasurer of the United States, for interest paid by him or her, whether by check or otherwise;

(3) Each Federal Reserve Bank, for interest paid by it, whether by check or otherwise; or

(4) Such other person as may be designated by the IRS.

(e) *Assumed obligations.* If, in connection with the sale of a corporation's property, payment on the bonds or other obligations of the corporation is assumed by a person, then that person shall be a withholding agent to the extent amounts subject to withholding are paid to a foreign person. Thus, the person shall withhold such amounts under §1.1441–1 as would be required to be withheld by the seller or corporation had no such sale or assumption been made.

(f) *Conduit financing arrangements*—(1) *Liability of withholding agent.* Subject to paragraph (f)(2) of this section, any person that is required to deduct and withhold tax under §1.1441–3(g) is made liable for that tax by section 1461. A person that is required to deduct and withhold tax but fails to do so is liable for the payment of the tax and any applicable penalties and interest.

(2) *Exception for withholding agents that do not know of conduit financing arrangement*—(i) *In general.* A withholding agent will not be liable under paragraph (f)(1) of this section for failing to deduct and withhold with respect to a conduit financing arrangement unless the person knows or has reason to know that the financing arrangement is a conduit financing arrangement. This standard shall be satisfied if the withholding agent knows or has reason to know of facts sufficient to establish that the financing arrangement is a conduit financing arrangement, including facts sufficient to establish that the participation of the intermediate entity in the financing arrangement is pursuant to a tax avoidance plan. A withholding agent that knows only of the financing transactions that comprise the financing arrangement will not be considered to know or have reason to know of facts sufficient to establish that the financing arrangement is a conduit financing arrangement.

(ii) *Examples*. The following examples illustrate the operation of paragraph (d)(2) of this section.

Example 1. (i) DS is a U.S. subsidiary of FP, a corporation organized in Country N, a country that does not have an income tax treaty with the United States. FS is a special purpose subsidiary of FP that is incorporated in Country T, a country that has an income tax treaty with the United States that prohibits the imposition of withholding tax on payments of interest. FS is capitalized with $10,000,000 in debt from BK, a Country N bank, and $1,000,000 in capital from FS.

(ii) On May 1, 1995, C, a U.S. person, purchases an automobile from DS in return for an installment note. On July 1, 1995, DS sells a number of installment notes, including C's, to FS in exchange for $10,000,000. DS continues to service the installment notes for FS and C is not notified of the sale of its obligation and continues to make payments to DS. But for the withholding tax on payments of interest by DS to BK, DS would have borrowed directly from BK, pledging the installment notes as collateral.

(iii) The C installment note is a financing transaction, whether held by DS or by FS, and the FS note held by BK also is a financing transaction. After FS purchases the installment note, and during the time the installment note is held by FS, the transactions constitute a financing arrangement, within the meaning of §1.881–3(a)(2)(i). BK is the financing entity, FS is the intermediate entity, and C is the financed entity. Because the participation of FS in the financing arrangement reduces the tax imposed by section 881 and because there was a tax avoidance plan, FS is a conduit entity.

(iv) Because C does not know or have reason to know of the tax avoidance plan (and by extension that the financing arrangement is a conduit financing arrangement), C is not required to withhold tax under section 1441. However, DS, who knows that FS's participation in the financing arrangement is pursuant to a tax avoidance plan and is a withholding agent for purposes of section 1441, is not relieved of its withholding responsibilities.

Example 2. Assume the same facts as in *Example, 1* except that C receives a new payment booklet on which DS is described as ''agent''. Although C may deduce that its installment note has been sold, without more C has no reason to know of the existence of a financing arrangement. Accordingly, C is not liable for failure to withhold, although DS still is not relieved of its withholding responsibilities.

Example 3. (i) DC is a U.S. corporation that is in the process of negotiating a loan of $10,000,000 from BK1, a bank located in Country N, a country that does not have an income tax treaty with the United States. Before the loan agreement is signed, DC's tax lawyers point out that interest on the loan would not be subject to withholding tax if the loan were made by BK2, a subsidiary of BK1 that is incorporated in Country T, a country that has an income tax treaty with the United States that prohibits the imposition of withholding tax on payments of interest. BK1 makes a loan to BK2 to enable BK2 to make the loan to DC. Without the loan from BK1 to BK2, BK2 would not have been able to make the loan to DC.

(ii) The loan from BK1 to BK2 and the loan from BK2 to DC are both financing transactions and together constitute a financing arrangement within the meaning of §1.881–3(a)(2)(i). BK1 is the financing entity, BK2 is the intermediate entity, and DC is the financed entity. Because the participation of BK2 in the financing arrangement reduces the tax imposed by section 881 and because there is a tax avoidance plan, BK2 is a conduit entity.

(iii) Because DC is a party to the tax avoidance plan (and accordingly knows of its existence), DC must withhold tax under section 1441. If DC does not withhold tax on its payment of interest, BK2, a party to the plan and a withholding agent for purposes of section 1441, must withhold tax as required by section 1441.

Example 4. (i) DC is a U.S. corporation that has a long-standing banking relationship with BK2, a U.S. subsidiary of BK1, a bank incorporated in Country N, a country that does not have an income tax treaty with the United States. DC has borrowed amounts of as much as $75,000,000 from BK2 in the past. On January 1, 1995, DC asks to borrow $50,000,000 from BK2. BK2 does not have the funds available to make a loan of that size. BK2 considers asking BK1 to enter into a loan with DC but rejects this possibility because of the additional withholding tax that would be incurred. Accordingly, BK2 borrows the necessary amount from BK1 with the intention of on-lending to DC. BK1 does not make the loan directly to DC because of the withholding tax that would apply to payments of interest from DC to BK1. DC does not negotiate with BK1 and has no reason to know that BK1 was the source of the loan.

(ii) The loan from BK2 to DC and the loan from BK1 to BK2 are both financing transactions and together constitute a financing arrangement within the meaning of §1.881–3(a)(2)(i). BK1 is the financing entity, BK2 is the intermediate entity, and DC is the financed entity. The participation of BK2 in the financing arrangement reduces the tax imposed by section 881. Because the participation of BK2 in the financing arrangement reduces the tax imposed by section 881 and because there was a tax avoidance plan, BK2 is a conduit entity.

(iii) Because DC does not know or have reason to know of the tax avoidance plan (and

by extension that the financing arrangement is a conduit financing arrangement), DC is not required to withhold tax under section 1441. However, BK2, who is also a withholding agent under section 1441 and who knows that the financing arrangement is a conduit financing arrangement, is not relieved of its withholding responsibilities.

(3) *Effective date*. This paragraph (f) is effective for payments made by financed entities on or after September 11, 1995. This paragraph shall not apply to interest payments covered by section 127(g)(3) of the Tax Reform Act of 1984, and to interest payments with respect to other debt obligations issued prior to October 15, 1984 (whether or not such debt was issued by a Netherlands Antilles corporation).

(g) *Effective date*. Except as otherwise provided in paragraph (f)(3) of this section, this section applies to payments made after December 31, 2000.

[T.D. 7977, 49 FR 36834, Sept. 20, 1984, as amended by T.D. 8611, 60 FR 41014, Aug. 11, 1995; 60 FR 55312, Oct. 31, 1995; T.D. 8734, 62 FR 53462, Oct. 14, 1997; T.D. 8804, 63 FR 72188, Dec. 31, 1998; T.D. 8856, 64 FR 73412, Dec. 30, 1999; T.D. 8881, 65 FR 32197, 32212, May 22, 2000; 66 FR 18189, Apr. 6, 2001]

§ 1.1441–8 Exemption from withholding for payments to foreign governments, international organizations, foreign central banks of issue, and the Bank for International Settlements.

(a) *Foreign governments*. Under section 892, certain specific types of income received by foreign governments are excluded from gross income and are exempt from taxation, unless derived from the conduct of a commercial activity or received from or by a controlled commercial entity. Accordingly, withholding is not required under § 1.1441.1 with regard to any item of income which is exempt from taxation under section 892.

(b) *Reliance on claim of exemption by foreign government*. Absent actual knowledge or reason to know otherwise, the withholding agent may rely upon a claim of exemption made by the foreign government if, prior to the payment, the withholding agent can reliably associate the payment with documentation upon which it can rely to treat the payment as made to a beneficial owner in accordance with § 1.1441–1(e)(1)(ii). A Form W–8 furnished by a foreign government for purposes of claiming an exemption under this paragraph (b) is valid only if, in addition to other applicable requirements, it certifies that the income is, or will be, exempt from taxation under section 892 and the regulations under that section and whether the person whose name is on the certificate is an integral part of a foreign government (as defined in § 1.892–2T(a)(2)) or a controlled entity (as defined in § 1.892–2T(a)(3)).

(c) *Income of a foreign central bank of issue or the Bank for International Settlements*—(1) *Certain interest income*. Section 895 provides for the exclusion from gross income of certain income derived by a foreign central bank of issue, or by the Bank for International Settlements, from obligations of the United States or of any agency or instrumentality thereof or from interest on deposits with persons carrying on the banking business if the bank is the owner of the obligations or deposits and does not hold the obligations or deposits for, or use them in connection with, the conduct of a commercial banking function or other commercial activity by such bank. See § 1.895–1. Absent actual knowledge or reason to know that a foreign central bank of issue, or the Bank for International Settlements, is operating outside the scope of the exclusion granted by section 895 and the regulations under that section, the withholding agent may rely on a claim of exemption if, prior to the payment, the withholding agent can reliably associate the payment with documentation upon which it can rely to treat the foreign central bank of issue or the Bank for International Settlements as the beneficial owner of the payment in accordance with § 1.1441–1(e)(1)(ii). A Form W–8 furnished by a foreign central bank of issue or the Bank for International Settlements for purposes of claiming an exemption under this paragraph (c)(1) is valid only if, in addition to other applicable requirements, it certifies that the person whose name is on the certificate is a foreign central bank of issue, or the Bank for International Settlements, and that the bank does not, and will not, hold the obligations or the bank deposits covered by the

Form W–8 for, or use them in connection with, the conduct of a commercial banking function or other commercial activity.

(2) *Bankers acceptances*. Interest derived by a foreign central bank of issue from bankers acceptances is exempt from tax under sections 871(i)(2)(C) and 881(d) and § 1.861–2(b)(4). With respect to bankers' acceptances, a withholding agent may treat a payee as a foreign central bank of issue without requiring a withholding certificate if the name of the payee and other facts surrounding the payment reasonably indicate that the payee or beneficial owner is a foreign central bank of issue, as defined in § 1.861–2(b)(4).

(d) *Exemption for payments to international organizations*. A payment to an international organization (within the meaning of section 7701(a)(18)) is exempt from withholding on any payment. A withholding agent may treat a payee as an international organization without requiring a withholding certificate if the name of the payee is one that is designated as an international organization by executive order (pursuant to 22 U.S.C. 288 through 288(f)) and other facts surrounding the transaction reasonably indicate that the international organization is the beneficial owner of the payment.

(e) *Failure to receive withholding certificate timely and other applicable procedures*. See applicable procedures described in § 1.1441–1(b)(7) in the event the withholding agent does not hold a valid withholding certificate described in paragraph (b) or (c)(1) of this section or other appropriate documentation at the time of payment. Further, the provisions of § 1.1441–1(e)(4) shall apply to withholding certificates and other documents related thereto furnished under the provisions of this section.

(f) *Effective date*—(1) *In general*. This section applies to payments made after December 31, 2000.

(2) *Transition rules*. For purposes of this section, the validity of a Form 8709 that was valid on January 1, 1998, under the regulations in effect prior to January 1, 2001 (see 26 CFR part 1, revised April 1, 1999) and expired, or will expire, at any time during 1998, is extended until December 31, 1998. The validity of a Form 8709 that is valid on or after January 1, 1999, remains valid until its validity expires under the regulations in effect prior to January 1, 2001 (see 26 CFR part 1, revised April 1, 1999) but in no event shall such a form remain valid after December 31, 2000. The rule in this paragraph (f)(2), however, does not apply to extend the validity period of a Form 8709 that expires solely by reason of changes in the circumstances of the person whose name is on the certificate. Notwithstanding the first three sentences of this paragraph (f)(2), a withholding agent may choose to not take advantage of the transition rule in this paragraph (f)(2) with respect to one or more withholding certificates valid under the regulations in effect prior to January 1, 2001 (see 26 CFR part 1, revised April 1, 1999) and, therefore, to require withholding certificates conforming to the requirements described in this section (new withholding certificates). For purposes of this section, a new withholding certificate is deemed to satisfy the documentation requirement under the regulations in effect prior to January 1, 2001 (see 26 CFR part 1, revised April 1, 1999). Further, a new withholding certificate remains valid for the period specified in § 1.1441–1(e)(4)(ii), regardless of when the certificate is obtained.

[T.D. 8211, 53 FR 24066, June 27, 1988, as amended at T.D. 8211, 53 FR 27595, July 21, 1988; Redesignated and amended by T.D. 8734, 62 FR 53464, Oct. 14, 1997; T.D. 8804, 63 FR 72185, Dec. 31, 1998; 64 FR 73410, Dec. 30, 1999]

§ 1.1441–9 Exemption from withholding on exempt income of a foreign tax-exempt organization, including foreign private foundations.

(a) *Exemption from withholding for exempt income*. No withholding is required under section 1441(a) or 1442, and the regulations under those sections, on amounts paid to a foreign organization that is described in section 501(c) to the extent that the amounts are not income includable under section 512 in computing the organization's unrelated business taxable income. See, however, § 1.1443–1 for withholding on payments of unrelated business income to foreign tax-exempt organizations and on payments subject to tax under section 4948. For a foreign organization to

claim an exemption from withholding under section 1441(a) or 1442 based on its status as an organization described in section 501(c), it must furnish the withholding agent with a withholding certificate described in paragraph (b)(2) of this section. A foreign organization described in section 501(c) may choose to claim a reduced rate of withholding under the procedures described in other sections of the regulations under section 1441 and not under this section. In particular, if an organization chooses to claim benefits under an income tax treaty, the withholding procedures applicable to claims of such a reduced rate are governed solely by the provisions of §1.1441–6 and not of this section.

(b) *Reliance on foreign organization's claim of exemption from withholding*—(1) *General rule.* A withholding agent may rely on a claim of exemption under this section only if, prior to the payment, the withholding agent can reliably associate the payment with a valid withholding certificate described in paragraph (b)(2) of this section.

(2) *Withholding certificate.* A withholding certificate under this paragraph (b)(2) is valid only if it is a Form W–8 and if, in addition to other applicable requirements, the Form W–8 includes the taxpayer identifying number of the organization whose name is on the certificate, and it certifies that the Internal Revenue Service (IRS) has issued a favorable determination letter (and the date thereof) that is currently in effect, what portion, if any, of the amounts paid constitute income includible under section 512 in computing the organization's unrelated business taxable income, and, if the organization is described in section 501(c)(3), whether it is a private foundation described in section 509. Notwithstanding the preceding sentence, if the organization cannot certify that it has been issued a favorable determination letter that is still in effect, its withholding certificate is nevertheless valid under this paragraph (b)(2) if the organization attaches to the withholding certificate an opinion that is acceptable to the withholding agent from a U.S. counsel (or any other person as the IRS may prescribe in published guidance (see §601.601(d)(2) of this chapter)) concluding that the organization is described in section 501(c). If the determination letter or opinion of counsel to which the withholding certificate refers concludes that the organization is described in section 501(c)(3), and the certificate further certifies that the organization is not a private foundation described in section 509, an affidavit of the organization setting forth sufficient facts concerning the operations and support of the organization for the Internal Revenue Service (IRS) to determine that such organization would be likely to qualify as an organization described in section 509(a)(1), (2), (3), or (4) must be attached to the withholding certificate. An organization that provides an opinion of U.S. counsel or an affidavit may provide the same opinion or affidavit to more than one withholding agent provided that the opinion is acceptable to each withholding agent who receives it in conjunction with a withholding certificate. Any such opinion of counsel or affidavit must be renewed whenever there is a change in facts or circumstances that are relevant to determine the organization's status under section 501(c) or, if relevant, that the organization is or is not a private foundation described in section 509.

(3) *Presumptions in the absence of documentation.* Notwithstanding paragraph (b)(1) of this section, if the organization's certification with respect to whether amounts paid constitute income includable under section 512 in computing the organization's unrelated business taxable income is not reliable or is lacking but all other certifications are reliable, the withholding agent may rely on the certificate but the amounts paid are presumed to be income includable under section 512 in computing the organization's unrelated business taxable income. If the certification regarding private foundation status is not reliable, the withholding agent may rely on the certificate but the amounts paid are presumed to be paid to a foreign beneficial owner that is a private foundation.

(4) *Reason to know.* Reliance by a withholding agent on the information and certifications stated on a withholding certificate is subject to the agent's actual knowledge or reason to

know that such information or certification is incorrect as provided in §1.1441–7(b). For example, a withholding agent must cease to treat a foreign organization's claim for exemption from withholding based on the organization's tax-exempt status as valid beginning on the earlier of the date on which such agent knows that the IRS has given notice to such foreign organization that it is not an organization described in section 501(c) or the date on which the IRS gives notice to the public that such foreign organization is not an organization described in section 501(c). Similarly, a withholding agent may no longer rely on a certification that an amount is not subject to tax under section 4948 beginning on the earlier of the date on which such agent knows that the IRS has given notice to such foreign organization that it is subject to tax under section 4948 or the date on which the IRS gives notice that such foreign organization is a private foundation within the meaning of section 509(a).

(c) *Failure to receive withholding certificate timely and other applicable procedures.* See applicable procedures described in §1.1441–1(b)(7) in the event the withholding agent does not hold a valid withholding certificate or other appropriate documentation at the time of payment. Further, the provisions of §1.1441–1(e)(4) shall apply to withholding certificates and other documents related thereto furnished under the provisions of this section.

(d) *Effective date*—(1) *In general.* This section applies to payments made after December 31, 2000.

(2) *Transition rules.* For purposes of this section, the validity of a Form W–8, 1001, or 4224 or a statement that was valid on January 1, 1998, under the regulations in effect prior to January 1, 2001 (see 26 CFR parts 1 and 35a, revised April 1, 1999) and expired, or will expire, at any time during 1998, is extended until December 31, 1998. The validity of a Form W–8, 1001, or 4224 or a statement that is valid on or after January 1, 1999 remains valid until its validity expires under the regulations in effect prior to January 1, 2001 (see 26 CFR parts 1 and 35a, revised April 1, 1999) but in no event shall such form or statement remain valid after December 31, 2000. The rule in this paragraph (d)(2), however, does not apply to extend the validity period of a Form W–8, 1001, or 4224 or a statement that expires solely by reason of changes in the circumstances of the person whose name is on the certificate. Notwithstanding the first three sentences of this paragraph (d)(2), a withholding agent may choose to not take advantage of the transition rule in this paragraph (d)(2) with respect to one or more withholding certificates valid under the regulations in effect prior to January 1, 2001 (see 26 CFR parts 1 and 35a, revised April 1, 1999) and, therefore, to require withholding certificates conforming to the requirements described in this section (new withholding certificates). For purposes of this section, a new withholding certificate is deemed to satisfy the documentation requirement under the regulations in effect prior to January 1, 2001 (see 26 CFR parts 1 and 35a, revised April 1, 1999). Further, a new withholding certificate remains valid for the period specified in §1.1441-1(e)(4)(ii), regardless of when the certificate is obtained.

[T.D. 8734, 62 FR 53465, Oct. 14, 1997, as amended by T.D. 8804, 63 FR 72185, Dec. 31, 1998; T.D. 8856, 64 FR 73410, Dec. 10, 1999; T.D. 8881, 65 FR 32201, May 22, 2000]

§ 1.1441–10 Withholding agents with respect to fast-pay arrangements.

(a) *In general.* A corporation that issues fast-pay stock in a fast-pay arrangement described in §1.7701(l)–3(b)(1) is a withholding agent with respect to payments made on the fast-pay stock and payments deemed made under the recharacterization rules of §1.7701(l)–3. Except as provided in this paragraph (a) or in paragraph (b) of this section, the withholding tax rules under section 1441 and section 1442 apply with respect to a fast-pay arrangement described in §1.7701(l)–3(c)(1)(i) in accordance with the recharacterization rules provided in §1.7701(l)–3(c). In all cases, notwithstanding paragraph (b) of this section, if at any time the withholding agent knows or has reason to know that the Commissioner has exercised the discretion under either §1.7701(l)–3(c)(1)(ii) to apply the recharacterization rules of

§ 1.7701(l)–3(c), or § 1.7701(l)–3(d) to depart from the recharacterization rules of § 1.7701(l)–3(c) for a taxpayer, the withholding agent must withhold on payments made (or deemed made) to that taxpayer in accordance with the characterization of the fast-pay arrangement imposed by the Commissioner under § 1.7701(l)–3.

(b) *Exception*. If at any time the withholding agent knows or has reason to know that any taxpayer entered into a fast-pay arrangement with a principal purpose of applying the recharacterization rules of § 1.7701(l)–3(c) to avoid tax under section 871(a) or section 881, then for each payment made or deemed made to such taxpayer under the arrangement, the withholding agent must withhold, under section 1441 or section 1442, the higher of—

(1) The amount of withholding that would apply to such payment determined under the form of the arrangement; or

(2) The amount of withholding that would apply to deemed payments determined under the recharacterization rules of § 1.7701(l)–3(c).

(c) *Liability*. Any person required to deduct and withhold tax under this section is made liable for that tax by section 1461, and is also liable for applicable penalties and interest for failing to comply with section 1461.

(d) *Examples*. The following examples illustrate the rules of this section:

Example 1. REIT W issues shares of fast-pay stock to foreign individual A, a resident of Country C. United States source dividends paid to residents of C are subject to a 30 percent withholding tax. W issues all shares of benefited stock to foreign individuals who are residents of Country D. D's income tax convention with the United States reduces the United States withholding tax on dividends to 15 percent. Under § 1.7701(l)–3(c), the dividends paid by W to A are deemed to be paid by W to the benefited shareholders. W has reason to know that A entered into the fast-pay arrangement with a principal purpose of using the recharacterization rules of § 1.7701(l)–3(c) to reduce United States withholding tax. W must withhold at the 30 percent rate because the amount of withholding that applies to the payments determined under the form of the arrangement is higher than the amount of withholding that applies to the payments determined under § 1.7701(l)–3(c).

Example 2. The facts are the same as in *Example 1* of this paragraph (d) except that W does not know, or have reason to know, that A entered into the arrangement with a principal purpose of using the recharacterization rules of § 1.7701(l)–3(c) to reduce United States withholding tax. Further, the Commissioner has not exercised the discretion under § 1.7701(l)–3(d) to depart from the recharacterization rules of § 1.7701(l)–3(c). Accordingly, W must withhold tax at a 15 percent rate on the dividends deemed paid to the benefited shareholders.

(e) *Effective date*. This section applies to payments made (or deemed made) on or after January 6, 1999.

[T.D. 8853, 65 FR 1312, Jan. 10, 2000]

§ 1.1442–1 Withholding of tax on foreign corporations.

For regulations concerning the withholding of tax at source under section 1442 in the case of foreign corporations, foreign governments, international organizations, foreign tax-exempt corporations, or foreign private foundations, see §§ 1.1441–1 through 1.1441–9.

[T.D. 8734, 62 FR 53466, Oct. 14, 1997]

§ 1.1442–2 Exemption under a tax treaty.

For regulations providing for a claim of reduced withholding tax under section 1442 by certain foreign corporations pursuant to the provisions of an income tax treaty, see § 1.1441–6.

[T.D. 8734, 62 FR 53466, Oct. 14, 1997]

§ 1.1442–3 Tax exempt income of a foreign tax-exempt corporations.

For regulations providing for a claim of exemption for income exempt from tax under section 501(a) of a foreign tax-exempt corporation, see § 1.1441–9. See § 1.1443–1 for withholding rules applicable to foreign private foundations and to the unrelated business income of foreign tax-exempt organizations.

[T.D. 8734, 62 FR 53466, Oct. 14, 1997]

§ 1.1443–1 Foreign tax-exempt organizations.

(a) *Income includible under section 512 in computing unrelated business taxable income*. In the case of a foreign organization that is described in section 501(c), amounts paid to the organization includible under section 512 in

computing the organization's unrelated business taxable income are subject to withholding under §§1.1441–1, 1.1441–4, and 1.1441–6 in the same manner as payments of the same amounts to any foreign person that is not a tax-exempt organization. Therefore, a foreign organization receiving amounts includible under section 512 in computing the organization's unrelated business taxable income may claim an exemption from withholding or a reduced rate of withholding with respect to that income in the same manner as a foreign person that is not a tax-exempt organization. See §1.1441–9(b)(3) for presumption that amounts are includible under section 512 in computing the organization's unrelated business taxable income in the absence of a reliable certification.

(b) *Income subject to tax under section 4948*—(1) *In general.* The gross investment income (as defined in section 4940(c)(2)) of a foreign private foundation is subject to withholding under section 1443(b) at the rate of 4 percent to the extent that the income is from sources within the United States and is subject to the tax imposed by section 4948(a) and the regulations under that section. Withholding under this paragraph (b) is required irrespective of the fact that the income may be effectively connected with the conduct of a trade or business in the United States by the foreign organization. See §1.1441–9(b)(3) for applicable presumptions that amounts are subject to tax under section 4948. The withholding imposed under this paragraph (b)(1) does not obviate a private foundation's obligation to file any return required by law with respect to such organization, such as the form that the foundation is required to file under section 6033 for the taxable year.

(2) *Reliance on a foreign organization's claim of foreign private foundation status.* For reliance by a withholding agent on a foreign organization's claim of foreign private foundation status, see §1.1441–9 (b) and (c).

(3) *Applicable procedures.* A withholding agent withholding the 4-percent amount pursuant to paragraph (b)(1) of this section shall treat such withholding as withholding under section 1441(a) or 1442(a) for all purposes, including reporting of the payment on a Form 1042 and a Form 1042–S pursuant to §1.1461–1 (b) and (c). Similarly, the foreign private foundation shall treat the 4-percent withholding as withholding under section 1441(a) or 1442(a), including for purposes of claims for refunds and credits.

(4) *Claim of benefits under an income tax treaty.* The withholding procedures applicable to claims of a reduced rate under an income tax treaty are governed solely by the provisions of §1.1441–6 and not by this section.

(c) *Effective date*—(1) *In general.* This section applies to payments made after December 31, 2000.

(2) *Transition rules.* For purposes of this section, the validity of an affidavit or opinion of counsel described in §1.1443–1(b)(4)(i) in effect prior to January 1, 2001 (see §1.1443–1(b)(4)(i) as contained in 26 CFR part 1, revised April 1, 1999) is extended until December 31, 2000. However, a withholding agent may choose to not take advantage of the transition rule in this paragraph (c)(2) with respect to one or more withholding certificates valid under the regulations in effect prior to January 1, 2001 (see 26 CFR part 1, revised April 1, 1999) and, therefore, to require withholding certificates conforming to the requirements described in this section (new withholding certificates). For purposes of this section, a new withholding certificate is deemed to satisfy the documentation requirement under the regulations in effect prior to January 1, 2001 (see 26 CFR part 1, revised April 1, 1999). Further, a new withholding certificate remains valid for the period specified in §1.1441–1(e)(4)(ii), regardless of when the certificate is obtained.

[T.D. 8734, 62 FR 53466, Oct. 14, 1997, as amended by T.D. 8804, 63 FR 72186, Dec. 31, 1998; T.D. 8856, 64 FR 73411, Dec. 30, 1999]

§ 1.1445–1 Withholding on dispositions of U.S. real property interests by foreign persons: In general.

(a) *Purpose and scope of regulations.* These regulations set forth rules relating to the withholding requirements of section 1445. In general, section 1445(a) provides that any person who acquires a U.S. real property interest from a foreign person must withhold a tax of 10 percent from the amount realized by

the transferor foreign person (or a lesser amount established by agreement with the Internal Revenue Service). Section 1445(e) provides special rules requiring withholding on distributions and certain other transactions by corporations, partnerships, trusts, and estates. This §1.1445–1 provides general rules concerning the withholding requirement of sections 1445(a), as well as definitions applicable under both section 1445(a) and 1445(e). Section 1.1445–2 provides for various situations in which withholding is not required under section 1445(a). Section 1.1445–3 provides for adjustments to the amount required to be withheld by transferees under section 1445(a). Section 1.1445–4 prescribes the duties of agents in transactions subject to withholding under either section 1445(a) or 1445(e). Section 1.1445–5 provides rules concerning the withholding required under section 1445(e), while §1.1445–6 provides for adjustments to the amount required to be withheld under section 1445(e). Finally, §1.1445–7 provides rules concerning the treatment of a foreign corporation that has made an election under section 897(i) to be treated as a domestic corporation.

(b) *Duty to withhold*—(1) *In general.* Transferees of U.S. real property interests are required to deduct and withhold a tax equal to 10 percent of the amount realized by the transferor, if the transferor is a foreign person and the disposition takes place on or after January 1, 1985. Neither the transferee's duty to withhold nor the amount required to be withheld is affected by the amount of cash to be paid by the transferee. Amounts withheld must be reported and paid over in accordance with the requirements of paragraph (c) of this section. Failures to withhold and pay over are subject to the liabilities set forth in paragraph (e) of this section. If two or more persons are joint transferees of a U.S. real property interest, each such person is subject to the obligation to withhold. That obligation is fulfilled with respect to each such person if any one of them withholds and pays over the required amount in accordance with the rules of this section. If the amount realized (as defined in paragraph (g)(5) of this section) by the transferor is zero, then no withholding is required. For example, if a real property interest is transferred as a gift (i.e, the recipient does not assume any liabilities or furnish any other consideration to the transferor) then no withholding is required. Withholding is not required with respect to dispositions that takes place before January 1, 1985, even if the first payment of consideration is made after December 31, 1984.

(2) *U.S. real property interest owned jointly by foreign and non-foreign transferors.* The amount subject to withholding under paragraph (b)(1) of this section with respect to the transfer of a U.S. real property interest owned by one or more foreign persons (as defined in §1.897–1(k)) and one or more non-foreign persons shall be determined by allocating the amount realized from the transfer between (or among) such transferors based upon the capital contribution of each transferor with respect to the property and by aggregating the amounts allocated to any foreign person (or persons). For this purpose, a husband and wife will each be deemed to have contributed 50 percent of the aggregate capital contributed by such husband and wife. See §1.1445–1(f)(3)(iv) with respect to the crediting of the amount withheld between or among joint foreign transferors.

(3) *Options to acquire a U.S. real property interest*—(i) *No withholding on grant of option.* No withholding is required under section 1445 with respect to any amount realized by the grantor on the grant of an option to acquire a U.S. real property interest.

(ii) *No withholding upon lapse of option.* No withholding is required under section 1445 with respect to any amount realized by the grantor upon the lapse of an option to acquire a U.S. real property interest.

(iii) *Withholding required upon the sale or exchange of option.* A transferee of an option to acquire a U.S. real property interest must deduct and withhold a tax equal to 10 percent of the amount realized by the transferor upon the disposition. This §1.1445–1(b)(3)(iii) does not apply to require withholding upon the initial grant of an option.

(iv) *Withholding required on exercise of option.* If the holder exercises an option

to purchase a U.S. real property interest, the amount paid for the option shall be considered an amount realized by the grantor/transferor upon the transfer of the property with respect to which the option was granted, and shall thus be subject to withholding on the day that such underlying property is transferred. The preceding sentence applies regardless of whether or not the terms of the option specifically provide that the option price is applied to the purchase price.

(4) Exceptions and modifications. The duty to withhold under section 1445(a) is subject to the exceptions and modifications contained in §§1.1445–2 and 1.1445–3. Generally, §1.1445–2 provides rules for determining that withholding is not required because either the transferor is not a foreign person or the interest transferred is not a U.S. real property interest. In addition, §1.1445–2 provides exceptions to the withholding requirement, including a rule that exempts from withholding any person who acquires a U.S. real property interest for use as a residence for a contract price of $300,000 or less. If withholding is required under section 1445(a), §1.1445–3 allows the amount withheld to be modified pursuant to a withholding certificate issued by the Internal Revenue Service. If a transferee cannot withhold the full amount required because the first payment of consideration for the transfer does not involve sufficient cash (or other liquid assets convertible into cash, such as foreign currency), then a withholding certificate must be obtained pursuant to §1.1445–3.

(c) *Reporting and paying over of withheld amounts*—(1) *In general.* A transferee must report and pay over any tax withheld by the 20th day after the date of the transfer. Forms 8288 and 8288–A are used for this purpose, and must be filed with the Internal Revenue Service Center, Philadelphia, PA, 19255. Pursuant to section 7502 and regulations thereunder, the timely mailing of Forms 8288 and 8228–A will be treated as their timely filing. Form 8288–A will be stamped by the IRS to show receipt, and a stamped copy will be mailed by the IRS to the transferor (at the address reported on the form) for the transferor's use. See §§1.1445–1(f) and 1.1445–3(f).

(2) *Pending application for withholding certificate*—(i) *In general. (A) Delayed reporting and payment with respect to application submitted by transferee.* If an application for a withholding certificate with respect to a transfer of a U.S. real property interest is submitted to the Internal Revenue Service by the transferee on the day of or at any time prior to the transfer, the transferee must withhold 10 percent of the amount realized as required by paragraph (b) of this section. However, the amount withheld, or a lesser amount as determined by the Service, need not be reported and paid over to the Service until the 20th day following the Service's final determination with respect to the application for a withholding certificate. For this purpose, the Service's final determination occurs on the day when the withholding certificate is mailed to the transferee by the Service or when a notification denying the request for a withholding certificate is mailed to the transferee by the Service. An application is submitted to the Service on the day it is actually received by the Service at the address provided in §1.1445–1(g)(10) or, under the rules of section 7502, on the day it is mailed to the Service at the address provided in §1.1445–1(g)(10).

(B) *Delayed reporting and payment with respect to application submitted by transferor.* If an application for a withholding certificate with respect to a transfer of a U.S. real property interest is submitted to the Internal Revenue Service by the Transferor on the day of or any time prior to the transfer, such transferor must provide notice to the transferee prior to the transfer. No particular form is required but the notice must set forth the name, address, and taxpayer identification number, if any, of the transferor, a brief description of the property which is the subject of the application, and the date the application was submitted to the Service. The transferee must withhold 10 percent of the amount realized as required in paragraph (b) of this section but need not report or pay over to the Service such amount (or a lesser amount as determined by the Service) until the 20th

day following the Service's final determination with respect to the application. The Service will send a copy of the withholding certificate or copy of the notification denying the request for a withholding certificate to the transferee. For this purpose, the Service's final determination will be deemed to occur on the day when the copy of the withholding certificate or the copy of the notification denying the request for a withholding certificate is mailed by the Service to the transferee (or transferees). An application is submitted to the Service on the day it is actually received by the Service at the address provided in § 1.1445–1(g)(10) or, under the rules of § 7502, on the day it is mailed to the Service at the address provided in § 1.1445–1(g)(10).

(ii) *Anti-abuse rule*—(A) *In general.* A transferee that in reliance upon the rules of this paragraph (c)(2) fails to report and pay over amounts withheld by the 20th day following the date of the transfer, shall be subject to the payment of interest and penalties if the relevant application for a withholding certificate (or an amendment to the application for a withholding certificate) was submitted for a principal purpose of delaying the transferee's payment to the IRS of the amount withheld. Interest and penalties shall be assessed on the amount that is ultimately paid over (or collected pursuant to the agreement) with respect to the period between the 20th day after the date of the transfer and the date on which payment is made (or collected).

(B) *Presumption.* A principal purpose of delaying payment of the amount withheld shall be presumed if—

(*1*) The transferee applies for a withholding certificate pursuant to § 1.1445–3(c) based on a determination of the transferor's maximum tax liability, and

(*2*) Such liability is ultimately determined to be equal to 90 percent or more of the amount that was otherwise required to be withheld and paid over. However, the presumption created by the previous sentence may be rebutted by evidence establishing that delaying payment of the amount withheld was not a principal purpose of the transaction.

(d) *Contents of Forms 8288 and 8288–A*—(1) *Transactions subject to section 1445(a).* Any person that is required to file Forms 8288 and 8288–A pursuant to section 1445(a) and the rules of this section must set forth thereon the following information:

(i) The name, identifying number (if any), and home address (in the case of an individual) or office address (in the case of any entity) of the transferee(s) filing the return;

(ii) The name, identifying number (if any), and home address (in the case of an individual) or office address (in the case of any entity) of the transferor(s);

(iii) A brief description of the U.S. real property interest transferred, including its location and the nature of any substantial improvements in the case of real property, and the class or type and amount of interests transferred in the case of interests in a corporation that constitute U.S. real property interests;

(iv) The date of the transfer;

(v) The amount realized by the transferor, as defined in paragraph (g)(5) of this section;

(vi) The amount withheld by the transferee and whether withholding is at the statutory or reduced rate; and

(vii) Such other information as the Commissioner may require.

For purposes of paragraph (d)(1) (i) and (ii), mailing addresses may be provided in addition to, but not in lieu of, home addresses or office addresses.

(2) *Transactions subject to section 1445(e).* Any person that is required to file Forms 8288 and 8288–A pursuant to the rules of § 1.1445–5 must set forth thereon the following information:

(i) The name, identifying number (if any), and office address of the entity or fiduciary filing the return;

(ii) The amount withheld by the entity or fiduciary;

(iii) The date of the transfer;

(iv) In the case of a transaction subject to withholding pursuant to section 1445(e)(1) and § 1.1445–5(c):

(A) A brief description of the U.S. real property interest transferred, as described in paragraph (d)(1)(iii) of this section;

(B) The name, identifying number (if any), and home address (in the case of an individual) or office address (in the

case of an entity) of each holder of an interest in the entity that is a foreign person; and

(C) Each such interest-holder's pro rata share of the amount withheld;

(v) In the case of a distribution subject to withholding pursuant to section 1445(e)(2) and § 1.1445–5(d):

(A) A brief description of the U.S. real property interest transferred, as described in paragraph (d)(1)(iii) of this section; and

(B) The amount of gain recognized upon the distribution by the corporation.

(vi) In the case of a distribution subject to withholding pursuant to section 1445(e)(3) and § 1.1445–5(e):

(A) A brief description of the property distributed by the corporation;

(B) The name, identifying number (if any), and home address (in case of an individual) or office address (in the case of an entity) of each holder of an interest in the entity that is a foreign person;

(C) The amount realized upon the distribution by each such foreign interest holder; and

(D) Each foreign interest-holder's pro rata share of the amount withheld; and

(vii) Such other information as the Commissioner may require.

(e) *Liability of transferee upon failure to withhold*—(1) *In general*. Every person required to deduct and withhold tax under section 1445 is made liable for that tax by section 1461. Therefore, a person that is required to deduct and withhold tax but fails to do so may be held liable for the payment of the tax and any applicable penalties and interest.

(2) *Transferor's liability not otherwise satisfied*—(i) *Tax and penalties*. Except as provided in paragraph (e)(3) of this section, if a transferee is required to deduct and withhold tax under section 1445 but fails to do so, then the tax shall be assessed against and collected from that transferee. Such person may also be subject to any of the civil and criminal penalties that apply. Corporate officers or other responsible persons may be subject to a civil penalty under section 6672 equal to the amount that should have been withheld and paid over.

(ii) *Interest*. If a transferee is required to deduct and withhold tax under section 1445 but fails to do so, then such transferee shall be liable for the payment of interest pursuant to section 6601 and the regulations thereunder. Interest shall be payable with respect to the period between—

(A) The last date on which the tax imposed under section 1445 was required to be paid over by the transferee, and

(B) The date on which such tax is actually paid. Interest shall be payable with respect to the entire amount that is required to be deducted and withheld. However, if the Service issues a withholding certificate providing for withholding of a reduced amount, then, for the period after the issuance of the certificate, interest shall be payable with respect to that reduced amount.

(3) *Transferor's liability otherwise satisfied*—(i) *Tax and penalties*. If a transferee is required to deduct and withhold tax under section 1445 but fails to do so, and the transferor's tax liability with respect to the transfer was satisfied (or was established to be zero) by—

(A) The transferor's filing of an income tax return (and payment of any tax due) with respect to the transfer, or

(B) The issuance of a withholding certificate by the Internal Revenue Service establishing that the transferor's maximum tax liability is zero,

then the tax required to be withheld under section 1445 shall not be collected from the transferee. Such transferee's liability for tax, and the requirement that such person file Forms 8288 and 8288–A, shall be deemed to have been satisfied as of the date on which the transferor's income tax return was filed or the withholding certificate was issued. No penalty shall be imposed on or collected from such person for failure to return or pay the tax, unless such failure was fraudulent and for the purpose of evading payment. A transferee that seeks to avoid liability for tax and penalties pursuant to the rule of paragraph (e)(3)(i) must provide sufficient information for the Service to determine whether the transferor's tax liability was satisfied (or was established to be zero).

(ii) *Interest*. If a transferee is required to deduct and withhold tax under section 1445 but fails to do so, then such person shall be liable for the payment of interest under section 6601 and regulations thereunder. Such transferee's liability for the payment of interest shall not be excused by reason of the deemed satisfaction, pursuant to subdivision (i) of this paragraph (e)(3), of the transferee's liability under section 1445, because the deemed satisfaction of that liability is the equivalent of the late payment of a liability, on which interest must be paid. Interest shall be payable with respect to the period between—

(A) The last date on which the tax imposed under section 1445 was required to be paid over, and

(B) The date (established from information supplied to the Service by the transferee) on which any tax due is paid with respect to the transferor's relevant income tax return, or the date the withholding certificate is issued establishing that the transferor's maximum tax liability is zero.

Interest shall be payable with respect to the entire amount that is required to be deducted and withheld. However, if the Service issues a withholding certificate providing for withholding of a reduced amount, then for the period after the issuance of the certificate interest shall be payable with respect to that reduced amount.

(4) *Coordination with entity with holding rules*. For purposes of section 1445(e) and §§1.1445–5, 1.1445–6, 1.1445–7, and 1.1445–8T, the rules of this paragraph (e) shall be applied by—

(i) Substituting the words ''person required to withhold'' for the word ''transferee'' each place it appears in this paragraph (e), and

(ii) Substituting the words ''person subject to withholding'' for the word ''transferor'' each place it appears in this paragraph (e).

(f) *Effect of withholding on transferor*—(1) *In general*. The withholding of tax under section 1445(a) does not excuse a foreign person that disposes of a U.S. real property interest from filing a U.S. tax return with respect to the income arising from the disposition. Form 1040NR, 1041, or 1120F, as appropriate, must be filed, and any tax due must be paid, by the filing deadline generally applicable to such person. (The return may be filed by such later date as is provided in an extension granted by the Internal Revenue Service.) Any tax withheld under section 1445(a) shall be credited against the amount of income tax as computed in such return.

(2) *Manner of obtaining credit or refund*. A stamped copy of Form 8288–A will be provided to the transferor by the Service (under paragraph (c) of this section), and must be attached to the transferor's return to establish the amount withheld that is available as a credit. If the amount withheld under section 1445(a) constitutes less than the full amount of the transferor's U.S. tax liability for that taxable year, then a payment of estimated tax may be required to be made pursuant to section 6154 or 6654 prior to the filing of the income tax return for that year. Alternatively, if the amount withheld under section 1445(a) exceeds the transferor's maximum tax liability with respect to the disposition (as determined by the IRS), then the transferor may seek an early refund of the excess pursuant to §1.1445–3(g), or a normal refund upon the filing of a tax return.

(3) *Special rules*—(i) *Failure to receive Form 8288–A*. If a stamped copy of Form 8288–A has not been provided to the transferor by the Service, the transferor may establish the amount of tax withheld by the transferee by attaching to its return substantial evidence (*e.g.*, closing documents) of such amount. Such a transferor must attach to its return a statement which supplies all of the information required by §1.1445–1(d) (except such information that was not obtained after a diligent effort).

(ii) *U.S. persons subjected to withholding*. If a transferee withholds tax under section 1445(a) with respect to a person who is not a foreign person, such person may credit the amount of any tax withheld against his income tax liability in accordance with the provisions of this §1.1145–1(f) or apply for an early refund under §1.1445–3(g).

(iii) *Refund in case of installment sale.* A transferor that takes gain into account in accordance with the provisions of section 453 shall not be entitled to a refund of the amount withheld, unless a withholding certificate providing for such a refund is obtained from the Internal Revenue Service pursuant to the provisions of § 1.1445–3.

(iv) *Joint foreign transferors.* If two or more foreign persons jointly transfer a U.S. real property interest, each transferor shall be credited with such portion of the amount withheld as such transferors mutually agree. Such transferors must request that the transferee reflect the agreed-upon crediting of the amount withheld on the Forms 8288–A filed by the transferee. If the foreign transferors fail to request that the transferee reflect the agreed-upon crediting of the amount withheld by the 10th day after the date of transfer, the transferee must credit the amount withheld equally between (or among) the foreign transferors. In such case, the transferee is indemnified pursuant to section 1461 against any claim by a transferor objecting to the resulting division of credits. For rules regarding the amount realized allocated to joint foreign and non-foreign transferors, see § 1.1445–1(b)(2).

(g) *Definitions*—(1) *In general.* Unless otherwise specified, the definitions of terms provided in § 1.897–1 shall apply for purposes of this section and §§ 1.1445–2 through 1.1445–7. For purposes of section 1445 and the regulations thereunder, definitions of other relevant terms are provided in this paragraph (g). In addition, the term ''residence'' is defined in 1.1445–2(d)(1), the terms ''transferor's agent'' and ''transferee's agent'' are defined in 1.1445–4(f), and the term ''relevant taxpayer'' is defined in 1.1445–6(a)(2).

(2) *Transfer.* The term ''transfer'' means any transaction that would constitute a disposition for any purpose, of the Internal Revenue Code and regulations thereunder. For purposes of §§ 1.1445–5 and 1.1445–6, the term includes distribution to shareholders of a corporation, partners of a partnership and beneficiaries of a trust or estate.

(3) *Transferor.* The term ''transferor'' means any person, foreign or domestic, that disposes of a U.S. real property interest by sale, exchange, gift, or any other transfer. The term ''U.S. real property interest'' is defined in § 1.897–1(c).

(4) *Transferee.* The term ''transferee'' means any person, foreign or domestic, that acquires a U.S. real property interest by purchase, exchange, gift, or any other transfer.

(5) *Amount realized.* The amount realized by the transferor for the transfer of a U.S. real property interest is the sum of.

(i) The cash paid, or to be paid.

(ii) The fair market value of other property transferred, or to be transferred, and

(iii) The outstanding amount of any liability assumed by the transferee or to which the U.S. real property interest is subject immediately before and after the transfer.

The term ''cash paid or to be paid'' does not include stated or unstated interest or original issue discount (as determined under the rules of sections 1271 through 1275).

(6) *Contract price.* The contract price of a U.S. real property interest is the sum that is agreed to by the transferee and transferor as the total amount of consideration to be paid for the property. That amount will generally be equal to the amount realized by the transferor, as defined in paragraph (b)(5) of this section.

(7) *Fair market value.* The fair market value of property means the price at which the property would change hands between an unrelated willing buyer and willing seller, neither being under any compulsion to buy or to sell and both having reasonable knowledge of all relevant facts.

(8) *Date of transfer.* The date of transfer of a U.S. real property interest is the first date on which consideration is paid (or a liability assumed) by the transferee. However, for purposes of section 1445(e) (2), (3), and (4) and §§ 1.1445–5(c)(1)(iii) and 1.1445–5(c)(3) only, the date of transfer is the date of the distribution that gives rise to the obligation to withhold. For purposes of this paragraph (g)(8), the payment of consideration does not include the payment, prior to the passage of legal or equitable title (other than pursuant to an initial contract for purchase), of

earnest money, a good-faith deposit, or any similar sum that is primarily intended to bind the transferee or transferor to the entering or performance of a contract. Such a payment will not constitute a payment of consideration solely because it may ultimately be applied against the amount owed to the transferor by the transferee. Such a payment is presumed to be earnest money, a good faith deposit, or a similar sum if it is subject to forfeiture in the event of a failure to enter into a contract or a breach of contract. However, a payment that is not forefeitable may nevertheless be found to constitute earnest money, a good faith deposit, or a similar sum.

(9) *Identifying number*. Pursuant to § 1.897–1(p), an individual's identifying number is the social security number (or the identification numbers assigned by the Internal Revenue Service). The identifying number of any other person is its United States employer identification number.

(10) *Address of the Assistant Commissioner International*. Any written communication directed to the Assistant Commissioner (International) is to be addressed as follows: Director, Philadelphia Service Center; 11601 Roosevelt Blvd.; Philadelphia, PA 19255; ATTN: Drop Point 543X.

[T.D. 8113, 51 FR 46629, Dec. 24, 1986; 52 FR 3796, 3916, Feb. 6, 1987, as amended by T.D. 8647, 60 FR 66076, Dec. 21, 1995]

§ 1.1445–2 Situations in which withholding is not required under section 1445(a).

(a) *Purpose and scope of section*. This section provides rules concerning various situations in which withhold is not required under section 1445(a). In general, a transferee has a duty to withhold under section 1445(a) only if both of the following are true:

(1) The transferor is a foreign person; and

(2) The transferee is acquiring a U.S. real property interest.

Thus, paragraphs (b) and (c) of this section provide rules under which a transferee of property can ascertain that he has no duty to withhold because one or the other of the two key elements is missing. Under paragraph (b), a transferee may determine that no withholding is required because the transferor is not a foreign person. Under paragraph (c), a transferee may determine that no withholding is required because the property acquired is not a U.S. real property interest. Finally, paragraph (d) of this section provides rules concerning exceptions to the withholding requirement.

(b) *Transferor not a foreign person*—(1) *In general*. No withholding is required under section 1445 if the transferor of a U.S. real property interest is not a foreign person. Therefore, paragraph (b)(2) of this section provides rules pursuant to which the transferor can provide a certification of non-foreign status to inform the transferee that withholding is not required. A transferee that obtains such a certification must retain that document for five years, as provided in paragraph (b)(3) of this section. Except to the extent provided in paragraph (b)(4) of this section, the obtaining of this certification excuses the transferee from any liability otherwise imposed by section 1445 and § 1.1445–1(e). However, section 1445 and the rules of this section do not impose any obligation upon a transferee to obtain a certification from the transferor, thus, a transferee may instead rely upon other means to ascertain the non-foreign status of the transferor. If, however, the transferee relies upon other means and the transferor was, in fact, a foreign person, then the transferee is subject to the liability imposed by section 1445 and § 1.1445–1(e).

A transferee is in no event required to rely upon other means to ascertain the non-foreign status of the transferor and may demand a certification of non-foreign status. If the certification is not provided, the transferee may withhold tax under section 1445 and will be considered, for purposes of sections 1461 through 1463, to have been required to withhold such tax.

(2) *Transferor's certification of non-foreign status*—(i) *In general*. A transferee of a U.S. real property interest is not required to withhold under section 1445(a) if, prior to or at the time of the transfer, the transferor furnishes to the transferee a certification that—

(A) States that the transferor is not a foreign person.

(B) Sets forth the transferor's name, identifying number and home address (in the case of an individual) or office address (in the case of an entity), and

(C) Is signed under penalties of perjury.

In general, a foreign person is a nonresident alien individual, foreign corporation, foreign partnership, foreign trust, or foreign estate, but not a resident alien individual. In this regard, see §1.897–1(k). However, a foreign corporation that has made a valid election under section 897(i) is generally not treated as a foreign person for purposes of section 1445. In this regard, see §1.1445–7. Pursuant to §1.897–1(p), an individual's identifying number is the individual's Social Security number and any other person's identifying number is its U.S. employer identification number. A certification pursuant to this paragraph (b) must be vertified as true and signed under penalties of perjury by a responsible officer in the case of a corporation, by a general partner in the case of a partnership, and by a trustee, executor, or equivalent fiduciary in the case of a trust or estate. No particular form is needed for a certification pursuant to this paragraph (b), nor is any particular language required, so long as the document meets the requirements of this paragraph (b)(2)(i). Samples of acceptable certifications are provided in paragraph(b)(2)(iii) of this section.

(ii) *Foreign corporation that ''has made election under section 897(i).* A foreign corporation that has made a valid election under section 897(i) to be treated as a domestic corporation for purposes of section 897 may provide a certification of non-foreign status pursuant to this paragraph (b)(2). However, an electing foreign corporation must attach to such certification a copy of the acknowledgment of the election provided to the corporation by the Internal Revenue Service pursuant to §1.897–3(d)(4).

An acknowledgment is valid for this purpose only if it states that the information required by §1.897–3 has been determined to be complete.

(iii) *Sample certifications*—(A) *Individual transferor.*

''Section 1445 of the Internal Revenue Code provides that a transferee (buyer) of a U.S. real property interest must withhold tax if the transferor (seller) is a foreign person. To inform the transferee (buyer) that withholding of tax is not required upon my disposition of a U.S. real property interest, I, [*name of transferor*], hereby certify the following:

1. I am not a nonresident alien for purposes of U.S. income taxation;

2. My U.S. taxpayer identifying number [Social Security number] is _____; and

3. My home address is:

_____

_____

I understand that this certification may be disclosed to the Internal Revenue Service by the transferee and that any false statement I have made here could be punished by fine, imprisonment, or both.

Under penalties of perjury I declare that I have examined this certification and to the best of my knowledge and belief it is true, correct, and complete. [Signature and Date]''

(B) *Entity transferor.*

''Section 1445 of the Internal Revenue Code provides that a transferee of a U.S. real property interest must withhold tax if the transferor is a foreign person. To inform the transferee that withholding of tax is not required upon the disposition of a U.S. real property interest by [*name of transferor*], the undersigned hereby certifies the following on behalf of [*name of transferor*]:

1. [*Name of transferor*] is not a foreign corporation, foreign partnership, foreign trust, or foreign estate (as those terms are defined in the Internal Revenue Code and Income Tax Regulations]:

2. [*Name of transferor*]'s U.S. employer identification number is _____, and

3. [*Name of transferor*]'s office address is

_____

[*Name of transferor*] understands that this certification may be disclosed to the Internal Revenue Service by transferee and that any false statement contained herein could be punished by fine, imprisonment or both.

Under penalties of perjury I declare that I have examined this certification and to the best of my knowledge and belief it is true, correct and complete, and I further declare that I have authority to sign this document on behalf of [*name of transferor*].

[Signature and date]

[Title _____]

(3) *Transferee must retain certification.* If a transferee obtains a transferor's certification pursuant to the rules of this paragraph (b), then the transferee must retain that certification until the end of the fifth taxable year following the taxable year in which the transfer

takes place. The transferee must retain the certification, and make it avaliable to the Internal Revenue Service when requested in accordance with the requirements of section 6001 and regulations thereunder.

(4) *Reliance upon certification not permitted*—(i) *In general.* A transferee may not rely upon a transferor's certification pursuant to this paragraph (b) under the circumstances set forth in either subdivision (ii) or (iii) of this paragraph (b)(4). In either of those circumstances, a transferee's withholding obligation shall apply as if a certification had never been obtained, and the transferee is fully liable pursuant to section 1445 and §1.1445–1(e) for any failure to withhold.

(ii) *Failure to attach IRS acknowledgment of election.* A transferee that knows that the transferor is a foreign corporation may not rely upon a certification of non-foreign status provided by the corporation on the basis of election under section 897(i), unless there is attached to the certification a copy of the acknowledgment by the Internal Revenue Service of the corporation's election, as required by paragraph (b)(2)(ii) of this section.

(iii) *Knowledge of falsity.* A transferee is not entitled to rely upon a transferor's certification if prior to or at the time of the transfer the transferee either—

(A) Has actual knowledge that the transferor's certification is false; or

(B) Receives a notice that the certification is false from a transferor's or transferee's agent, pursuant to §1.1445–4.

(iv) *Belated notice of false certification.* If after the date of the transfer a transferee receives a notice that a certification is false, then that transferee is entitled to rely upon the certification only with respect to consideration that was paid prior to receipt for the notice. Such a transferee is required to withhold a full 10 percent of the amount realized from the consideration that remains to be paid to the transferor if possible. Thus, if 10 percent or more of the amount reailzed remains to be paid to the transferor then the transferee is required to withhold and pay over the full 10 percent. The transferee must do so by withholding and paying over the entire amount of each successive payment of consideration to the transferor until the full 10 percent of the amount realized has been withheld and paid over. Amounts so withheld must be reported and paid over by the 20th day following the date on which each such payment of consideration is made. A transferee that is subject to the rules of this paragraph (b)(4)(iv) may not obtain a withholding certificate pursuant to §1.1445–3, but must instead withhold and pay over the amounts required by this paragraph.

(c) *Transferred property not a U.S. real property interest*—(1) *In general.* No withholding is required under section 1445 if the transferee acquires only property that is not a U.S. real property interest. As defined in section 897(c) and §1.897–1(c), a U.S. real property interest includes certain interests in U.S. corporations, as well as direct interests in real property and certain associated personal property. This paragraph (c) provides rules pursuant to which a person acquiring an interest in a U.S. corporation may determine that withholding is not required because that interest is not a U.S. real property interest. To determine whether an interest in tangible property constitutes a U.S. real property interest the acquisition of which would be subject to withholding, see §1.897–1 (b) and (c).

(2) *Interests in publicly traded entities.* No withholding is required under section 1445(a) upon the acquisition of an interest in a domestic corporation if any class of stock of the corporation is regularly traded on an established securities market.

This exemption shall apply if the disposition is incident to an initial public offering of stock pursuant to a registration statement filed with the Securities and Exchange Commission. Similarly, no withholding is required under section 1445(a) upon the acquisition of an interest in a publicly traded partnership or trust. However, the rule of this paragraph (c)(2) shall not apply to the acquisition, from a single transferor in a single (or related transferors (as defined in §1.897–1(i)) transaction (or related transactions), of an interest

described in §1.897–1(c)(2)(iii)(B) (relating to substantial amounts of non-publicly traded interests in publicly traded corporations) or to similar interests in publicly traded partnerships or trusts. The person making an acquisition described in the preceding sentence must otherwise determine whether withholding is required, pursuant to section 1445 and the regulations thereunder. Transactions shall be deemed to be related if they are undertaken within 90 days of one another or if it can otherwise be shown that they were undertaken in pursuance of a prearranged plan.

(3) *Transferee receives statement that interest in corporation is not a U.S. real property interest*—(i) *In general.* No withholding is required under section 1445(a) upon the acquisition of an interest in a domestic corporation, if the tranferor provides the transferee with a copy of a statement, issued by the corporation pursuant to §1.897–2(h), certifying that the interest is not a U.S. real property interest. In general, a corporation may issue such a statement only if the corporation was not a U.S. real property holding corporation at any time during the previous five years (or the period in which the interest was held by its present holder, if shorter) or if interests in the corporation ceased to be United States real property interests under section 897(c)(1)(B). (A corporation may not provide such a statement based on its determination that the interest in question is an interest solely as a creditor). See §1.897–2 (f) and (h). The corporation may provide such a statement directly to the transferee at the transferor's request. The transferor must request such a statement prior to the transfer, and shall, to the extent possible, specify the anticipated date of the transfer. A corporation's statement may be relied upon for purposes of this paragraph (c)(3) only if the statement is dated not more than 30 days prior to the date of the transfer. A transferee may also rely upon a corporation's statement that is voluntarily provided by the corporation in response to a request from the transferee, if that statement otherwise complies with the requirements of this paragraph (c)(3) and §1.897–2(h).

(ii) *Reliance on statement not permitted.* A transferee is not entitled to rely upon a statement that a corporation is not a U.S. real property holding corporation if, prior to or at the time of the transfer, the transferee either—

(A) Has actual knowledge that the statement is false, or

(B) Receives a notice that the statement is false from a transferor's or transferee's agent, pursuant to §1.1445–4.

Such a transferee's withholding obligations shall apply as if a statement had never been given, and such a transferee may be held fully liable pursuant to §1.1445–1(e) for any failure to withhold.

(iii) *Belated notice of false statement.* If after the date of the transfer, a transferee receives notice that a statement provided under §1.1445–2(c)(3)(i) (that an interest in a corporation is not a U.S. real property interest) is false, then such transferee may rely on the statement only with respect to consideration that was paid prior to the receipt of the notice.

Such a transferee is required to withhold a full 10 percent of the amount realized from the consideration that remains to be paid to the transferor, if possible. Thus, if 10 percent or more of the amount realized remains to be paid to the transferor, then the transferee is required to withhold and pay over the full 10 percent. The transferee must do so by withholding and paying over the entire amount of each successive payment of consideration to the transferor, until the full 10 percent of the amount realized has been withheld and paid over. Amounts so withheld must be reported and paid over by the 20th day following the date on which each such payment of consideration is made. A transferee that is subject to the rules of this §1.1445–2(c)(3)(iii) may not obtain a withholding certificate pursuant to §1.1445–3, but must instead withhold and pay over the amounts required by this paragraph.

(d) *Exceptions to requirement of withholding*—(1) *Purchase of residence for $300,000 or less.* No withholding is required under section 1445(a) if one or more individual transferees acquire a U.S. real property interest for use as a residence and the amount realized on the transaction is $300,000 or less. For

purposes of this section, a U.S. real property interest is acquired for use as a residence if on the date of the transfer the transferee (or transferees) has definite plans to reside at the property for at least 50 percent of the number of days that the property is used by any person during each of the first two 12-month periods following the date of the transfer. The number of days that the property will be vacant is not taken into account in determining the number of days such property is used by any person. A transferee shall be considered to reside at a property on any day on which a member of the transferee's family, as defined in section 267(c)(4), resides at the property. No form or other document need be filed with the Internal Revenue Service to establish a transferee's entitlement to rely upon the exception provided by this paragraph (d)(1). A transferee who fails to withhold in reliance upon this exception, but who does not in fact reside at the property for the minimum number of days set forth above, shall be liable for the failure to withhold (if the transferor was a foreign person and did not pay the full U.S. tax due on any gain recognized upon the transfer). However, if the transferee establishes that the failure to reside the minimum number of days was caused by a change in circumstances that could not reasonably have been anticipated at the time of the transfer, then the transferee shall not be liable for the failure to withhold.

The exception provided by paragraph (d)(1) does not apply in any case where the transferee is other than an individual even if the property is acquired for or on behalf of an individual who will use the property as a residence. However, this exception applies regardless of the organizational structure of the transferor (i.e., regardless of whether the transferor is an individual, partnership, trust, corporation, etc.).

(2) *Coordination with nonrecognition provisions*—(i) *In general*. A transferee shall not be required to withhold under section 1445(a) with respect to the transfer of a U.S. real property interest if—

(A) The transferor notifies the transferee, in the manner described in paragraph (d)(2)(iii) of this section, that by reason of the operation of a nonrecognition provision of the Internal Revenue Code or the provisions of any United States treaty the transferor is not required to recognize any gain or loss with respect to the transfer, and

(B) By the 20th day after the date of the transfer the transferee provides a copy of the transferor's notice to the Assistant Commissioner (International), at the address provided in §1.1445–1(g)(10), together with a cover letter setting forth the name, identifying number (if any), and home address (in the case of an individual) or office address (in the case of an entity) of the transferee providing the notice to the Service. The rule of this paragraph (d)(2)(i) is subject to the exceptions set forth in paragraph (d)(2)(ii). For purposes of this paragraph (d)(2) a nonrecognition provision is any provision of the Internal Revenue Code for not recognizing gain or loss.

(ii) *Exceptions*. A transferee may not rely upon the rule of paragraph (d)(2)(i) of this section, and must therefore withhold under section 1445(a) with respect to the transfer of a U.S. real property interest, if either:

(A) The transferor qualifies for nonrecognition treatment with respect to part, but not all, of the gain realized by the transferor upon the transfer, or

(B) The transferee knows or has reason to know that the transferor is not entitled to the nonrecognition treatment claimed by the transferor.

In either of the above circumstances the transferee or transferor may request a withholding certificate from the Internal Revenue Service pursuant to the rules of §1.1445–3.

(3) *Special procedural rules applicable to foreclosures*—(i) *Amount to be withheld*—(A) *foreclosures*. A transferee that acquires a U.S. real property interest pursuant to a repossession or foreclosure on such property under a mortgage, security agreement, deed of trust or other instrument securing a debt must withhold tax under section 1445(a) equal to 10 percent of the amount realized on such sale. Such amount must be reported and paid over to the Service under the general rules of §1.1445–1. However, if the transferee complies with the notice requirements of

§ 1.1445–2(d)(3) (ii) and (iii), such transferee may report and pay over to the Service on or before the 20th day following the final determination by a court or trustee with jurisdiction over the foreclosure action, the lesser of:

(*1*) The amount otherwise required to be withheld under section 1445(a), or

(*2*) The ''alternative amount'' as defined in the succeeding sentence. The alternative amount is the entire amount, if any, determined by a court or trustee with jurisdiction over the matter, that accrues to the debtor/transferor out of the amount realized from the foreclosure sale. The amount of any mortgage, lien, or other security agreement secured by the property, that is terminated, assumed by another person, or otherwise extinguished (as to the debtor/transferor) shall not be treated as an amount that accrues to the debtor/transferor for purposes of this § 1.1445–2(d)(3)(i)(A). If the alternative amount is zero, no withholding is required. Any difference between the amount withheld at the time of the foreclosure sale and the amount to be reported and paid over to the Service must be transferred to the court or trustee with jurisdiction over the foreclosure action. Amounts withheld, if any, are to be reported and paid to the Service by using Forms 8288 and 8288–A in conformity with § 1.1445–1(d).

(B) *Deeds in lieu of foreclosures.* A transferee of a U.S. real property interest pursuant to a deed in lieu of foreclosure must withhold tax equal to 10 percent of the amount realized by the debtor/transferor on the transfer. However, no withholding is required if:

(*1*) The transferee is the only person with a security interest in the property,

(*2*) No cash or other property (other than incidental fees incurred with respect to the transfer) is paid, directly or indirectly, to any person with respect to the transfer, and

(*3*) The notice requirement of § 1.1445–2(d)(3) are satisfied.

The amount withheld, if any, must be reported and paid over to the Service not later than the 20th day following the date of transfer. In a case where withholding would otherwise be required, a withholding certificate may be requested in accordance with § 1.1445–3.

(ii) *Notice to the court or trustee in a foreclosure action*—(A) *Notice on day of purchase.* A transferee in a foreclosure sale that chooses to use the special rules applicable to foreclosures must provide notice to the court or trustee with jurisdiction over the foreclosure action on the day the property is transferred with respect to such transferee's withholding obligation. No particular form is necessary but the notice must set forth the transferee's name, home address in the case of an individual, office address in the case of an entity, a brief description of the property, the date of the transfer, the amount realized on the sale of the foreclosed property and the amount withheld under section 1445(a).

(B) *Notice whether amount withheld or alternative amount is reported and paid over to the Service.* A purchaser/transferee in a foreclosure that chooses to use the special rules applicable to foreclosures must provide notice to the court or trustee with jurisdiction over the foreclosure action regarding whether the amount withheld or the alternative amount will be (or has been) reported and paid over to the Service. The notice should set forth all the information required by the preceding paragraph (d)(3)(ii)(A), the amount withheld or alternative amount that will be (or has been) reported and paid over to the Service, and the amount that will be (or has been) paid over to the court or trustee.

(iii) *Notice to the Service*—(A) *General rule.* A transferee that in reliance upon the rules of this paragraph (d)(3) withholds an alternative amount (or does not withhold because the alternative amount is zero) must, on or before the 20th day following the final determination by a court or trustee in a foreclosure action or on or before the 20th day following the date of the transfer with respect to a transfer pursuant to a deed in lieu of foreclosure, provide notice thereof to the Assistant Commissioner (International) at the address provided in § 1.1445–1(g)(10). (The filing of such a notice shall not relieve a creditor of any obligation it may have to file a notice pursuant to section 6050J and the regulations thereunder.)

No particular form is required but the following information must be set forth in paragraphs labelled to correspond with the numbers set forth below.

(*1*) A statement that the notice constitutes a notice of foreclosure action or transfer pursuant to a deed in lieu of foreclosure under § 1.1445–2(d)(3).

(*2*) The name, identifying number (if any) and home address (in the case of an individual) or office address (in the case of an entity) of the purchaser/transferee.

(*3*) The name, identifying number (if any), and home address (in the case of an individual) or office address (in the case of an entity) of the debor/transferor.

(*4*) In a foreclosure action, the date of the final determination by a court or trustee regarding the distribution of the amount realized from the foreclosure sale. In a transfer pursuant to a deed in lieu of foreclosure, the date the property is transferred to the purchaser/transferee.

(*5*) A brief description of the property.

(*6*) The amount realized from the foreclosure sale or with respect to the transfer pursuant to a deed in lieu of foreclosure.

(*7*) The alternative amount.

(B) *Special rule for lenders required to file Form 1099–A where the alternative amount is zero.* A person required under section 6050J to file Form 1099–A does not have to comply with the notice requirement of § 1.1445–2(d)(3)(iii)(A) if the alternative amount is zero. In such case, the filing of the Form 1099–A will be deemed to satisfy the notice requirments of § 1.1445–2(d)(3)(iii)(A).

(iv) *Requirements not applicable.* A transferee is not required to withhold tax or provide notice pursuant to the rules of this paragraph (d)(3) if no substantive withholding liability applies to the transfer of the property by the debtor/transferor. For example, if the debtor/transferor provides the transferee with a certification of non-foreign status pursuant to paragraph (b) of this section, then no substantive withholding liability would exist with respect to the acquisition of the property from the debtor transferor. In such a case, no withholding of tax or notice to the Internal Revenue Service is required of the transferee with respect to the repossession or foreclosure.

(v) *Anti-abuse rule.* If a U.S. real property interest is transferred in foreclosure or pursuant to a deed in lieu of foreclosure for a principal purpose of avoiding the requirements of section 1445(a), then the provisions of this paragraph (d)(3) shall not apply to the transfer and the transferee shall be fully liable for any failure to withhold with respect to the transfer. A principal purpose to avoid section 1445(a) will be presumed (subject to rebuttal on the basis of all relevant facts and circumstances) if:

(A) The transferee acquires property in which it, or a related party, has a security interest;

(B) The security interest did not arise in connection with the debtor/transferor's or a related party's or predecessor in interest's acquisition, improvement, or maintenance of the property; and

(C) The total amount of all debts secured by the property exceeds 90 percent of the fair market value of the property.

(4) *Installment payments.* A transferee of a U.S. real property interest is not required to withhold under section 1445 when making installment payments on an obligation arising out of a dispositions that took place before January 1, 1985. With respect to disposition that take place after December 31, 1984, the transferee shall be required to satisfy its entire withholding obligation within the time specified in § 1.1445–1(c) regardless of the amount actually paid by the transferee. Thereafter, no withholding is required upon further installment payments on an obligation arising out of the transfer. A transferee that is unable to satisfy its entire withholding obligation within the time specified in § 1.1445–1(c) may request a withholding certificate pursuant to § 1.1445–3.

(5) *Acquisitions by governmental bodies.* No withholding of tax is required under section 1445 with respect to any acquisition of property by the United States, a state or possession of the United States, a political subdivision thereof, or the District of Columbia.

(6) [Reserved]

(7) *Withholding certificate obtained by transferee or transferor.* No withholding is required under section 1445(a) if the transferee is provided with a withholding cerfiticate that so specifies. Either the transferor or the transferee may seek a withholding certificate from the Internal Revenue Service, pursuant to the provisions of § 1.1445–3.

(8) *Amount realized by transferor is zero.* If the amount realized by transferor on a transfer of a U.S. real property interest is zero, no withholding is required.

[T.D. 8113, 51 FR 46633, Dec. 24, 1986; 52 FR 3917, Feb. 6, 1987; as amended at T.D. 8198, 53 FR 16230, May 5, 1988]

§ 1.1445–3 Adjustments to amount required to be withheld pursuant to withholding certificate.

(a) *In general.* Withholding under section 1445(a) may be reduced or eliminated pursuant to a withholding certificate issued by the Internal Revenue Service in accordance with the rules of this section. A withholding certificate may be issued by the Service in cases where reduced withholding is appropriate (see paragraph (c) of this section), where the transferor is exempt from U.S. tax (see paragraph (d) of this section), or where an agreement for the payment of tax is entered into with the Service (see paragraph (e) of this section). A withholding certificate that is obtained prior to a transfer notifies the transferee that no withholding is required. A withholding certificate that is obtained after a transfer has been made may authorize a normal refund or an early refund pursuant to paragraph (g) of this section. Either a transferee or transferor may apply for a withholding certificate. The Internal Revenue Service will act upon an application for a withholding certificate not later than the 90th day after it is received. Solely for this purpose (i.e., determining the day upon which the 90-day period commences), an application is received by the Service on the date that all information necessary for the Service to make a determination is provided by the applicant. (For rules regarding whether an application for a withholding certificate has been timely submitted, see § 1.445–1(c)(2).) The Service may deny a request for a withholding certificate where, after due notice, an applicant fails to provide information necessary for the Service to make a determination. The Service will act upon an application for an early refund not later than the 90th day after it is received. An application for an early refund must either (1) include a copy of a withholding certificate issued by the Service with respect to the transaction or, (2) be combined with an application for a withholding certificate. Where an application for an early refund is combined with an application for a withholding certificate, the Service will act upon both applications not later than the 90th day after receipt. In the case of an application for a certificate based on non-conforming secuirty under paragraph (e)(3)(v) of this section, and in unusually complicated cases, the Service may be unable to provide a final withholding certificate by the 90th day. In such a case the Service will notify the applicant, by the 45th day after receipt of the application, that additional processing time will be necessary. The Service's notice may request additional information or explanation concerning particular aspects of the application, and will provide a target date for final action (contingent upon the application's timely submission of any requested information). A withholding certificate issued pursuant to the provisions of this section serves to fulfill the requirements of section 1445(b)(4) concerning qualifying statements, section 1445(c)(1) concerning the transferor's maximum tax liability, or section 1445(c)(2) concerning the Secretary's authority to prescribe reduced withholding.

(b) *Applications for withholding certificates*—(1) *In general.* An application for a withholding certificate must be submitted to the Assistant Commissioner (International), at the address provided in § 1.1445–1(g)(10). An application for a withholding certificate must be signed by a responsible officer in the case of a corporation, by a general partner in the case of a partnership, by a trustee, executor, or equivalent fiduciary in the case of a trust or estate, and in the case of an individual by the individual himself. A duly authorized

agent may sign the application but the application must contain a valid power of attorney authorizing the agent to sign the application on behalf of the applicant. The person signing the application must verify under penalties of perjury that all representations made in connection with the application are true, correct, and complete to his knowledge and belief. No particular form is required for an application, but the application must set forth the information described in paragraphs (b), (2), (3), and (4) of this section.

(2) *Parties to the transaction*. The application must set forth the name, address, and identifying number (if any) of the person submitting the application (specifying whether that person is the transferee or transferor), and the name, address, and identifying number (if any) of other parties to the transaction (specifying whether each such party is a transferee or transferor). The applicant must determine if an identifying number exists for each party concerned and if none exists for a particular party the application must so state. The address provided in the case of an individual must be that individual's home address, and the address provided in the case of an entity must be that entity's office address. A mailing address may be provided in addition to, but not in lieu of, a home address or office address.

(3) *Real property interest to be transferred*. The application must set forth information concerning the U.S. real property interest with respect to which the withholding certificate is sought, including the type of interest, the contract price, and, in the case of an interest in real property, its location and general description, or in the case of an interest in a U.S. real property holding corporation, the class or type and amount of the interest.

(4) *Basis for certificate*—(i) *Reduced withholding*. If a withholding certificate is sought on the basis of a claim that reduced withholding in appropriate, the application must include:

(A) A calculation of the maximum tax that may be imposed on the disposition in accordance with paragraph (c)(2) of this section. Such calculation must be accompanied by a copy of the relevant contract and depreciation schedules or other evidence that confirms the contract price and adjusted basis of the property. If no depreciation schedules are provided, the application must state the nature of the use of the property and why depreciation was not allowable. Evidence that supports any claimed adjustment to the maximum tax on the disposition must also be provided;

(B) A calculation of the transferor's unsatisfied withholding liability, or evidence supporting the claim that no such liability exists, in accordance with paragraph (c)(3) of this section; and

(C) In the case of a request for a special reduction of withholding pursuant to paragraph (c)(4) of this section, a statement of law and facts in support of the request.

(ii) *Exemption*. If a withholding certificate is sought on the basis of the transferor's exemption from U.S. tax, the application must set forth a brief statement of the law and facts that support the claimed exemption. In this regard, see paragraph (d) of this section.

(iii) *Agreement*. If a withholding certificate is sought on the basis of an agreement for the payment of tax, the application must include a signed copy of the agreement proposed by the applicant and a copy of the security instrument (if any) proposed by the applicant. In this regard, see paragraph (e) of this section.

(c) *Adjustment of amount required to be withheld*—(1) *In general*. The Internal Revenue Service may issue a withholding certificate that excuses withholding or that permits the transferee to withhold an adjusted amount reflecting the transferor's maximum tax liability. The transferor's maximum tax liability is the sum of—

(i) The maximum amount which could be imposed as tax under section 871 or 882 upon the transferor's disposition of the subject real property interest, as determined under paragraph (c)(2) of this section, and

(ii) The transferor's unsatisfied withholding liability with respect to the subject real property interest, as determined under paragraph (c)(3) of this section.

In addition, the Internal Revenue Service may issue a withholding certificate that permits the transferee to withhold a reduced amount if the Service determines pursuant to paragraph (c)(4) of this section that reduced withholding will not jeopardize the collection of tax.

(2) *Maximum tax imposed on disposition.* The first element of the transferor's maximum tax liability is the maximum amount which the transferor could be required to pay as tax upon the disposition of the subject real property interest. In the case of an individual transferor that amount will generally be the contract price of the property minus its adjusted basis, multiplied by the maximum individual income tax rate applicable to long term capital gain. In the case of a corporate transferor, that amount will generally be the contract price of the property minus its adjusted basis, multiplied by the maximum corporate income tax rate applicable to long term capital gain. However, that amount must be adjusted to take into account the following:

(i) Any reduction of tax to which the transferor is entitled under the provisions of a U.S. income tax treaty;

(ii) The effect of any nonrecognition provision that is applicable to the transaction;

(iii) Any losses realized and recognized upon the previous disposition of U.S. real property interests during the taxable year;

(iv) Any amount that is required to be treated as ordinary income; and

(v) Any other factor that may increase or reduce the tax upon the disposition.

(3) *Transferor's unsatisfied withholding liability*—(i) *In general.* The second element of the transferor's maximum tax liability is the transferor's unsatisfied withholding liability. That liability is the amount of any tax that the transferor was required to but did not withhold and pay over under section 1445 upon the acquisition of the subject U.S. real property interest or a predecessor interest. The transferor's unsatisfied withholding liability is included in the calculation of maximum tax liability so that such prior withholding liability can be satisfied by the transferee's withholding upon the current transfer. Alternatively, the transferor's unsatisfied withholding liability may be disregarded for purposes of calculating the maximum tax liability, if either—

(A) Such prior withholding liability is fully satisfied by a payment that is made with the application submitted pursuant to this section; or

(B) An agreement is entered into for the payment of that liability pursuant to the rules of paragraph (e) of this section.

Because section 1445 only requires withholding after December 31, 1984, no transferor's unsatisfied withholding liability can exist unless the transferor acquired the subject or predecessor real property interest after that date. For purposes of this paragraph (c), a predecessor interest is one that was exchanged for the subject U.S. real property interest in a transaction in which the transferor was not required to recognize the full amount of the gain or loss realized upon the transfer.

(ii) *Evidence that no unsatisfied withholding liability exists.* For purposes of paragraph (b)(4)(i)(B) of this section (concerning information that must be submitted with an application for a withholding certificate), evidence that the transferor has no unsatisfied withholding liability includes any one of the following documents:

(A) Evidence that the transferor acquired the subject or predecessor real property interest prior to January 1, 1985;

(B) A copy of the Form 8288 that was filed by the transferor, and proof of payment of the amount shown due thereon, with respect to the transferor's acquisition of the subject or predecessor real property interest;

(C) A copy of a withholding certificate with respect to the transferor's acquisition of the subject or predecessor real property interest, plus a copy of Form 8288 and proof of payment with respect to any withholding required under that certificate;

(D) A copy of the non-foreign certification furnished by the person from whom the subject or predecessor U.S. real property interest was acquired, executed at the time of that acquisition;

(E) Evidence that the transferor purchased the subject or predecessor real property for $300,000 or less, and a statement signed by the transferor under penalties of perjury, that the transferor purchased the property for use as a residence within the meaning of § 1.1445–2(d)(1);

(F) Evidence that the person from whom the transferor acquired the subject or predecessor U.S. real property interest fully paid any tax imposed on that transaction pursuant to section 897.

(G) A copy of a notice of nonrecognition treatment provided to the transferor pursuant to § 1.1445–2(d)(2) by person from whom the transferor acquired the subject or predecessor U.S. real property interest; and

(H) A statement, signed by the transferor under penalties of perjury, setting forth the facts and circumstances that supported the transferor's conclusion that no withholding was required under section 1445(a) with respect to the transferor's acquisition of the subject or predecessor real property interest.

(4) *Special reduction of amount required to be withheld.* The Internal Revenue Service may, in its discretion, issue a withholding certificate that permits the transferee to withhold a reduced amount based upon a determination that reduced withholding will not jeopardize the collection of tax. A transferor that requests a withholding certificate pursuant to this paragraph (c)(4) is required pursuant to paragraph (b)(4)(i)(C) of this section to submit a statement of law and facts in support of the request. That statement must explain why the transferor is unable to enter into an agreement for the payment of tax pursuant to paragraph (e) of this section.

(d) *Transferor's exemption from U.S. tax*—(1) *In general.* The Internal Revenue Service will issue a withholding certificate that excuses all withholding by a transferee if it is established that:

(i) The transferor's gain from the disposition of the subject U.S. real property interest will be exempt from U.S. tax, and

(ii) The transferor has no unsatisfied withholding liability.

For the available exemptions, see paragraph (d)(2) of this section. The transferor's unsatisfied withholding liability shall be determined in accordance with the provisions of paragraph (c)(3) of this section. A transferor that is entitled to a reduction of (rather than an exemption from) U.S. tax may obtain a withholding certificate to that effect pursuant to the provisions of paragraph (c) of this section.

(2) *Available exemptions.* A transferor's gain from the disposition of a U.S. real property interest may be exempt from U.S. tax because either:

(i) The transferor is an integral part or controlled entity of a foreign government and the disposition of the subject property is not a commercial activity, as determined pursuant to section 892 and the regulations thereunder; or

(ii) The transferor is entitled to the benefits of an income tax treaty that provides for such an exemption (subject to the limitations imposed by section 1125(c) of Pub. L. 96–499, which, in general, overrides such benefits as of January 1, 1985).

(e) *Agreement for the payment of tax*—(1) *In general.* The Internal Revenue Service will issue a withholding certificate that excuses withholding or that permits a transferee to withhold a reduced amount, if either the transferee or the transferor enters into an agreement for the payment of tax pursuant to the provisions of this paragraph (e). An agreement for the payment of tax is a contract between the Service and any other person that consists of two necessary elements. Those elements are—

(i) A contract between the Service and the other person, setting forth in detail the rights and obligations of each; and

(ii) A security instrument or other form of security acceptable to the Director, Foreign Operations District.

(2) *Contents of agreement*—(i) *In general.* An agreement for the payment of tax must cover an amount described in subdivision (ii) or (iii) of this paragraph (e)(2). The agreement may either provide adequate security for the payment of the chosen amount in accordance with paragraph (e)(3) of this section, or provide for the payment of that amount through a combination of

security and withholding of tax by the transferee.

(ii) *Tax that would otherwise be withheld.* An agreement for the payment of tax may cover the amount of tax that would otherwise be required to be withheld pursuant to section 1445(a). In addition to the amount computed pursuant to section 1445(a), the applicant must agree to pay interest upon that amount, at the rate established under section 6621, with respect to the period between the date on which the tax imposed by section 1445(a) would otherwise be due (*i.e.*, the 20th day after the date of transfer) and the date on which the transferor's payment of tax with respect to the disposition will be due under the agreement. The amount of interest agreed upon must be paid by the applicant regardless of whether or not the Service is required to draw upon any security provided pursuant to the agreement. The interest may be paid either with the return or by the Service drawing upon the security.

(iii) *Maximum tax liability.* An agreement for the payment of tax may cover the transferor's maximum tax liability, determined in accordance with paragraph (c) of this section. The agreement must also provide for the payment of an additional amount equal to 25 percent of the amount determined under paragraph (c) of this section. This additional amount secures the interest and penalties that would accrue between the date of a failure to file a return and pay tax with respect to the disposition, and the date on which the Service collects upon that liability pursuant to the agreement. Such additional amount will only be collected if the Service finds it necessary to draw upon any security provided due to the transferor's failure to file a return and pay tax with respect to the relevant disposition.

(3) *Major types of security*—(i) *In general.* The following are the major types of security acceptable to the Service. Further details with respect to the terms and conditions of each type may be specified by Revenue Procedure.

(ii) *Bond with surety or guarantor.* The Service may accept as security with respect to a transferor's tax liability a bond that is executed with a satisfactory surety or guarantor. Only the following persons may act as surety or guarantor for this purpose

(A) A surety company holding a certificate of authority from the Secretary as an acceptable surety on Federal bonds, as listed in Treasury Department Circular No. 570, published annually in the FEDERAL REGISTER on the first working day of July;

(B) A person that is engaged within or without the United States in the conduct of a banking, financing, or similar business under the principles of §1.864–4(c)(5), and that is subject to U.S. or foreign local or national regulation of such business, if that person is otherwise acceptable to the Service; and

(C) A person that is engaged within or without the United States in the conduct of an insurance business that is subject to U.S. or foreign local or national regulation, if that person is otherwise acceptable to the Service.

(iii) *Bond with collateral.* The Service may accept as security with respect to a transferor's tax liability a bond that is secured by acceptable collateral. All collateral must be deposited with a responsible financial institution acting as escrow agent, or, in the Service's discretion, with the Service. Only the following types of collateral are acceptable:

(A) Bonds, notes, or other public debt obligations of the United States, in accordance with the rules of 31 CFR part 225; and

(B) A certified cashier's, or treasurer's check, drawn on an entity acceptable to the Service that is engaged within or without the United States in the conduct of a banking, financing, or similar business under the principles of §1.864–4(c)(5) and that is subject to U.S. or foreign local or national regulation of such business.

(iv) *Letter of credit.* The Service may accept as security with respect to a transferor's tax liability an irrevocable letter of credit. The Service may accept a letter of credit issued by an entity acceptable to the Service that is engaged within or without the United States in the conduct of a banking, financing, or similar business under the principles of §1.864–4(c)(5) and that is subject to U.S. or foreign local or national regulation of such business.

However, the Director will accept a letter of credit from an entity that is not engaged in trade or business in the United States only if such letter may be drawn on an advising bank within the United States.

(v) *Guarantees and other non-conforming security*—(A) *Guarantee*. The Service may in its discretion accept as security with respect to a transferor's tax liability the applicant's guarantee that it will pay such liability. The Service will in general accept such a guarantee only from a corporation, foreign or domestic, any class of stock of which is regularly traded on an established securities market on the date of the transfer.

(B) *Other forms of security*. The Service may in unusual circumstances and at its discretion accept any form of security that if finds to be adequate. An application for a withholding certificate that proposes a form of security that does not conform with any of the preferred types set forth in paragraph (e)(3) (ii) through (iv) of this section or any relevant Revenue Procedure must include:

(*1*) A detailed statement of the facts and circumstances supporting the use of the proposed form of security, and

(*2*) A memorandum of law concerning the validity and enforceability of the proposed form of security.

(4) *Terms of security instrument*. Any security instrument that is furnished pursuant to this section must provide that—

(i) The amount of each deposit of estimated tax that will be required with respect to the gain realized on the subject disposition may be collected by levy upon the security as of the date following the date on which each such deposit is due (unless such deposit is timely made);

(ii) The entire amount of the liability may be collected by levy upon the security at any time during the nine months following the date on which the payment of tax with respect to the subject disposition is due, subject to release of the security upon the full payment of the tax and any interest and penalties due. If the transferor requests an extension of time to file a return with respect to the disposition, then the Director may require that the term of the security instrument be extended until the date that is nine months after the filing deadline as extended.

(f) *Amendments to application for withholding certificate*—(1) *In general*. An applicant for a withholding certificate may amend an otherwise complete application by submitting an amending statement to the Assistant Commissioner (International), at the address provided in § 1.1445–1(g)(10). The amending statement shall provide the information required by § 1.1445–3(f)(3) and must be signed and accompanied by a penalties of perjury statement in accordance with § 1.1445–3(b)(1).

(2) *Extension of time for the Service to process reqests for withholding certificates*—(i) *In general*. If an amending statement is submitted, the time in which the Internal Revenue Service must act upon the amended application shall be extended by 30 days.

(ii) *Substantial amendments*. If an amending statement is submitted and the Service finds that the statement substantially amends the facts of the underlying application or substantially alters the terms of the withholding certificate as requested in the initial application, the time within which the Service must act upon the amended application shall be extended by 60 days. The applicant shall be so notified.

(iii) *Amending statement received after the requested withholding certificate has been signed by the Assistant Commissioner (International)*. If an amending statement is received after the withholding certificate, drafted in response to the underlying application, has been signed by the Assistant Commissioner (International) or his delegate and prior to the day such certificate is mailed to the applicant, the time in which the Service must act upon the amended application shall be extended by 90 days. The applicant will be so notified.

(3) *Information required to be submitted*. No particular form is required for an amending statement but the statement must provide the following information:

(i) *Identification of applicant*. The amending statement must set forth the name, address and identifying number (if any) of the person submitting the

amending statement (specifying whether that person is the transferee or transferor).

(ii) *Date of underlying application*. The amending statement must set forth the date of the underlying application for a withholding certificate.

(iii) *Real property interest to be (or that has been) transferred*. The amending statement must set forth a brief description of the real property interest with respect to which the underlying application for a withholding certificate was submitted.

(iv) *Amending information*. The amending statement must fully set forth the basis for the amendment including any modification of the facts supporting the application for a withholding certificate and any change sought in the terms of the withholding certificate.

(g) *Early refund of overwithheld amounts*. If a transferor receives a withholding certificate pursuant to this section, and an amount greater than that specified in the certificate was withheld by the transferee, then pursuant to the rules of this paragraph (g) the transferor may apply for a refund (without interest) of the excess amount prior to the date on which the transferor's tax return is due (without extensions). (Any interest payable on refunds issued after the filing of a tax return shall be determined in accordance with the provisions of section 6611 and regulations thereunder.) An application for an early refund must be addressed to the Assistant Commissioner (International), at the address provided in §1.1445–1(g)(10). No particular form is required for the application, but the following information must be set forth in separate paragraphs numbered to correspond with the number given below:

(1) Name, address, and identifying number (if any) of the transferor seeking the refund;

(2) Amount required to be withheld pursuant to the withholding certificate issued by Internal Revenue Service;

(3) Amount withheld by the transferee (attach a copy of Form 8288–A stamped by IRS pursuant to §1.1445–1(c));

(4) Amount to be refunded to the transferor. An application for an early refund cannot be processed unless the required copy of Form 8288–A (or substantial evidence of the amount withheld in the case of a failure to receive Form 8288–A as provided in §1.1445–1(f)(3)) is attached to the application. If an application for a withholding certificate based upon the transferor's maximum tax liability is submitted after the transfer takes place, then that application may be combined with an application for an early refund. The Service will act upon a claim for refund within the time limits set forth in paragraph (a) of this section.

[T.D. 8113, 51 FR 46637, Dec. 24, 1986; 52 FR 3796, Feb. 6, 1987]

§ 1.1445–4 Liability of agents.

(a) *Duty to provide notice of false certification or statement to transferee*. A transferee's or transferor's agent must provide notice to the transferee if either—

(1) The transferee is furnished with a non-U.S. real property interest statement pursuant to §1.1445-2(c)(3) and the agent knows that the statement is false; or

(2) The transferee is furnished with a non-foreign certification pursuant to §1.1445–2(b)(2) and either (i) the agent knows that the certification is false, or (ii) the agent represents a transferor that is a foreign corporation. An agent that represents a transferor that is a foreign corporation is not required to provide notice to the transferee if the foreign corporation provided a non-foreign certification to the transferee prior to such agent's employment and the agent does not know that the corporation did so.

(b) *Duty to provide notice of false certification or statement to entity or fiduciary*. A transferee's or transferor's agent must provide notice to an entity or fiduciary that plans to carry out a transaction described in section 1445(e)(1), (2), (3), or (4) if either—

(1) The entity or fiduciary is furnished with a non-U.S. real property interest statement pursuant to §1.1445–5(b)(4)(iii) and the agent knows that such statement is false; or

(2) The entity or fiduciary is furnished with a non-foreign certification

pursuant to §1.1445–5(b)(3) (ii) and either (i) the agent knows that such certification is false, or (ii) the agent represents a foreign corporation that made such a certification.

(c) *Procedural requirements*—(1) *Notice to transferee, entity, or fiduciary.* An agent who is required by this section to provide notice must do so in writing as soon as possible after learning of the false certification or statement, but not later than the date of the transfer (prior to the transferee's payment of consideration). If an agent first learns of a false certification or statement after the date of the transfer, notice must be given by the third day following that discovery. The notice must state that the certification or statement is false and may not be relied upon. The notice must also explain the possible consequences to the recipient of a failure to withhold. The notice need not disclose the information on which the agent's statement is based. The following is an example of an acceptable notice.''This is to notify you that you may be required to withhold tax in connection with *(describe transaction).* You have been provided with a certification of non-foreign status (or a non-U.S. real property interest statement) in connection with that transaction. I have learned that that document is false. Therefore, you may not rely upon it as a basis for failing to withhold under section 1445 of the Internal Revenue Code. Section 1445 provides that any person who acquires a U.S. real property interest from a foreign person must withhold a tax equal to 10 percent of the total purchase price. (The term 'U.S. real property interest' includes real property, stock in U.S. corporations whose assets are primarily real property, and some personal property associated with realty.) Any person who is required to withhold but fails to do so can be held liable for the tax. Thus, if you do not withhold the 10 percent tax from the total that you pay on this transaction you could be required to pay the tax yourself, if what you are acquiring is a U.S. real property interest and the transferor is a foreign person. Tax that is withheld must be promptly paid over to the IRS using Form 8288. For further information see sections 897 and 1445 of the Internal Revenue Code and the related regulations.''

(2) *Notice to be filed with IRS.* An agent who is required by paragraph (a) or (b) of this section to provide notice to a transferee, entity, or fiduciary must furnish a copy of that notice to the Internal Revenue Service by the date on which the notice is required to be given to the transferee, entity, or fiduciary. The copy of the notice must be delivered to the Assistant Commissioner (International) at the address provided in §1.1445–1(g)(10) and must be accompanied by a cover letter stating that the copy is being filed pursuant to the requirements of this §1.1445–4(c)(2).

(d) *Effect on recipient.* A transferee, entity, or fiduciary that receives a notice pursuant to this section prior to the date of the transfer from any agent of the transferor or transferee may not rely upon the subject certification or statement for purposes of excusing withholding pursuant to §1.1445–2 or §1.1445–5. Therefore, the recipient of a notice may be held liable for any failure to deduct and withhold tax under section 1445 as if such certification or statement had never been given. For special rules concerning the effect of the receipt of a notice after the date of the transfer, see §§1.1445–2(b)(4)(iv) and 1.1445–5 (c), (d) and (e).

(e) *Failure to provide notice.* Any agent who is required to provide notice but who fails to do so in the manner required by paragraph (a) or (b) of this section shall be held liable for the tax that the recipient of the notice would have been required to withhold under section 1445 if such notice had been given. However, an agent's liability under this paragraph (e) is limited to the amount of compensation that that agent derives from the transaction. In addition, an agent who assists in the preparation of, or fails to disclose knowledge of, a false certification or statement may be liable for civil or criminal penalties.

(f) *Definition of transferor's or transferee's agent*—(1) *In general.* For purposes of this section, the terms ''transferor's agent'' and ''transferee's agent'' means any person who represents the transferor or transferee (respectively)—

(i) In any negotiation with another person (or another person's agent) relating to the transaction; or

(ii) In settling the transaction.

(2) *Transactions subject to section 1445(e).* In the case of transactions subject section 1445(e), the following definitions apply.

(i) The term ''transferor's agent'' means any person that represents or advises an entity or fiduciary with respect to the planning, arrangement, or consummation by the entity of a transaction described in section 1445(e) (1), (2), (3), or (4).

(ii) The term ''transferee's agent'' means any person that represents or advises the holder of an interest in an entity with respect to the planning, arrangement or consummation by the entity of a transaction described in section 1445(e) (1), (2), (3), or (4).

(3) *Exclusion of settlement officers and clerical personnel.* For purposes of this section, a person shall not be treated as a transferor's agent or transferee's agent with respect to any transaction solely because such person performs one or more of the following activities.

(i) The receipt and disbursement of any portion of the consideration for the transaction;

(ii) The recording of any document in connection with the transaction;

(iii) Typing, copying, and other clerical tasks;

(iv) The obtaining of title insurance reports and reports concerning the condition of the real property that is the subject of the transaction; or

(v) The transmission or delivery of documents between the parties.

(4) *Exclusion for governing body of a condominium association and the board of directors of a cooperative housing corporation.* The members of a board, committee or other governing body of a condominium association and the board of directors and officers of a cooperative housing corporation will not be deemed agents of the transferor or transferee if such individuals function exclusively in their capacity as representatives of such association or corporation with respect to the transaction. In addition, the managing agent of a cooperative housing corporation or condominium association will not be deemed to be an agent of the transferee or transferor if such person functions exclusively in its capacity as a managing agent. If a person's activities include advising the transferee or transferor with respect to the transfer, this exclusion shall not apply.

[T.D. 8113, 51 FR 46641, Dec. 24, 1986; 52 FR 3796, 3917, Feb. 6, 1987]

§ 1.1445–5 Special rules concerning distributions and other transactions by corporations, partnerships, trusts, and estates.

(a) *Purpose and scope.* This section provides special rules concerning the withholding that is required under section 1445(e) upon distributions and other transactions involving domestic or foreign corporations, partnerships, trusts, and estates. Paragraph (b) of this section provides rules that apply generally to the various withholding requirements set forth in this section. Under section 1445(e)(1) and paragraph (c) of this section, a domestic partnership or the fiduciary of a domestic trust or estate is required to withhold tax upon the entity's disposition of a U.S. real property interest if any foreign persons are partners or beneficiaries of the entity. Paragraph (d) provides rules concerning the requirement of section 1445(e)(2) that a foreign corporation withhold tax upon its distribution of a U.S. real property interest to its interest-holders. Finally, under section 1445(e)(3) and paragraph (e) of this section a domestic U.S. real property holding corporation is required to withhold tax upon certain distributions to interest-holders that are foreign persons. Paragraphs (f) and (g) of this section are reserved to provide rules concerning transactions involving interests in partnerships, trusts, and estates that will be subject to withholding pursuant to sections 1445(e) (4) and (5).

(b) *Rules of general application*—(1) *Double withholding not required.* If tax is required to be withheld with respect to a transfer of property in accordance with the rules of this section, then no additional tax is required to be withheld by the transferee of the property with respect to that transfer pursuant to the general rules of section 1445(a) and § 1.1445–1. For rules coordinating the withholding under section 1441 (or

section 1442 or 1443) and under section 1445 on distributions from a corporation, see § 1.1441–3(b)(4). If a transfer of a U.S. real property interest described in section 1445(e) is exempt from withholding under the rules of this section, then no withholding is required under the general rules of section 1445(a) and § 1.1445–1.

(2) *Coordination with nonrecognition provisions*—(i) *In general.* Withholding shall not be required under the rules of this section with respect to a transfer described in section 1445(e) of a U.S. real property interest if—

(A) By reason of the operation of a nonrecognition provision of the Internal Revenue Code or the provisions of any treaty of the United States no gain or loss is required to be recognized by the foreign person with respect to which withholding would otherwise be required; and

(B) The entity or fiduciary that is otherwise required to withhold complies with the notice requirements of paragraph (b)(2)(ii) of this section. The entity or fiduciary must determine whether gain or loss is required to be recognized pursuant to the rules of section 897 and the applicable nonrecognition provisions of the Internal Revenue Code. An entity or fiduciary may obtain a withholding certificate from the Internal Revenue Service that confirms the applicability of a nonrecognition provision, but is not required to do so. For purposes of this paragraph (b)(2), a nonrecognition provision is any provision of the Internal Revenue Code for not recognizing gain or loss. If nonrecognition treatment is available only with respect to part of the gain realized on a transfer, the exemption from withholding provided by this paragraph (b)(2) shall not apply. In such cases a withholding certificate may be sought pursuant to the provisions of § 1.1445–6.

(ii) *Notice of nonrecognition transfer.* An entity or fiduciary that fails to withhold tax with respect to a transfer in reliance upon the rules of this paragraph (b)(2) must by the 20th day after the date of the transfer deliver a notice thereof to the Assistant Commissioner, (International), at the address provided in § 1.1445–1(g)(10). No particular form is required for a notice of transfer, but the following information must be set forth in paragraphs labelled to correspond with the letter set forth below:

(A) A statement that the document submitted constitutes a notice of a nonrecognition transfer pursuant to the requirements of § 1.1445–5(b)(2)(ii);

(B) The name, office address, and identifying number (if any) of the entity of fiduciary submitting the notice;

(C) The name, identifying number (if any), and home address (in the case of an individual) or office address (in the case of an entity) of each foreign person with respect to which withholding would otherwise be required;

(D) A brief description of the transfer; and

(E) A brief statement of the law and facts supporting the claim that recognition of gain or loss is not required with respect to the transfer.

(3) *Interest-holder not a foreign person*—(i) *In general.* Pursuant to the provisions of paragraphs (c) and (e) of this section, an entity or fiduciary is required to withhold with respect to certain transfers of property if a holder of an interest in the entity is a foreign person. For purposes of determining whether a holder of an interest is a foreign person, and entity or fiduciary may rely upon a certification of nonforeign status provided by that person in accordance with paragraph (b)(3)(ii) of this section. Except to the extent provided in paragraph (b)(3)(iii) of this section, such a certification excuses the entity or fiduciary from any liability otherwise imposed pursuant to section 1445(e) and regulations thereunder. However, no obligation is imposed upon an entity or fiduciary to obtain certifications from interest-holders; an entity or fiduciary may instead rely upon other means to ascertain the nonforeign status of an interest-holder. If the entity or fiduciary does rely upon other means but the interest-holder proves, in fact, to be a foreign person, then the entity or fiduciary is subject to any liability imposed pursuant to section 1445 and regulations thereunder.

An entity or fiduciary is not required to rely upon other means to ascertain the non-foreign status of an interest-holder and may demand a certification

of non-foreign status. If the certification is not provided, the entity or fiduciary may withhold tax under section 1445 and will be considered, for purposes of sections 1461 through 1463, to have been required to withhold such tax.

(ii) *Interest-holder's certification of non-foreign status*—(A) *In general.* For purposes of this section, an entity or fiduciary may treat any holder of an interest in the entity as a U.S. person if that interest-holder furnishes to the entity or fiduciary a certification stating that the interest-holder is not a foreign person, in accordance with the provisions of paragraph (b)(3)(ii)(B) of this section. In general, a foreign person is a nonresident alien individual, foreign corporation, foreign partnership, foreign trust, or foreign estate, but not a resident alien individual. In this regard, see § 1.897–1(k).

(B) *Procedural rules.* An interest-holder's certification of non-foreign status must—

(*1*) State that the interest-holder is not a foreign person;

(*2*) Set forth the interest-holder's name, identifying number, home address (in the case of an individual), or office address (in the case of an entity), and place of incorporation (in the case of a corporation); and

(*3*) Be signed under penalties of perjury.

Pursuant to § 1.897–1(p), an individual's identifying number is the individual's Social Security number and any other person's identifying number is its U.S. employer identification number. The certification must be signed by a responsible officer in the case of a corporation, by a general partner in the case of a partnership, and by a trustee, executor, or equivalent fiduciary in the case of a trust or estate. No particular form is needed for a certification pursuant to this paragraph (b)(3)(ii)(B), nor is any particular language required, so long as the document meets the requirements of this paragraph. Samples of acceptable certifications are provided in paragraph (b)(3)(ii)(D) of this section. An entity may rely upon a certification pursuant to this paragraph (b)(3)(ii)(B) for a period of two calendar years following the close of the calendar year in which the certification was given.

If an interest holder becomes a foreign person within the period described in the preceding sentence, the interest-holder must notify the entity prior to any further dispositions or distributions and upon receipt of such notice (or any other notification of the foreign status of the interest-holder) the entity may no longer rely upon the prior certification. An entity that obtains and relies upon a certification must retain that certification with its books and records for a period of three calendar years following the close of the last calendar year in which the entity relied upon the certification.

(C) *Foreign corporation that has made an election under section 897(i).* A foreign corporation that has made a valid election under section 897(i) to be treated as a domestic corporation for purposes of section 897 may provide a certification of non-foreign status pursuant to this paragraph (b)(3)(ii). However, an electing foreign corporation must attach to such certification a copy of the acknowledgment of the election provided to the corporation by the Internal Revenue Service pursuant to § 1.897–3(d)(4).

An acknowledgment is valid for this purpose only if it states that the information required by § 1.897–3 has been determined to be complete.

(D) *Sample certifications*—(*1*) *Individual interest-holder.*

"Under section 1445(e) of the Internal Revenue Code, a corporation, partnership, trust or estate must withhold tax with respect to certain transfers of property if a holder of an interest in the entity is a foreign person. To inform (*name of entity*) that no withholding is required with respect to my interest in it, I, (*name of interest-holder*), hereby certify the following:

1. I am not a nonresident alien for purposes of U.S. income taxation;

2. My U.S. taxpayer identifying number (Social Security number) is _____; and

3. My home address is

_____

_____

I agree to inform [name of entity] promptly if I become a nonresident alien at any time during the three years immediately following the date of this notice.

I understand that this certification may be disclosed to the Internal Revenue Service by (*name of entity*) and that any false statement

I have made here could be punished by fine, imprisonment, or both.

Under penalties of perjury I declare that I have examined this certification and to the best of my knowledge and belief it is true, correct, and complete.

[*Signature and date*]''

(*2*) *Entity interest-holder*. ''Under section 1445(e) of the Internal Revenue Code, a corporation, partnership, trust, or estate must withhold tax with respect to certain transfers of property if a holder of an interest in the entity is a foreign person. To inform [*name of entity*] that no withholding is required with respect to [*name of interest-holder*]'s interest in it, the undersigned hereby certifies the following on behalf of [*name of interest-holder*]:

1. [*Name of interest-holder*] is not a foreign corporation, foreign partnership, foreign trust, or foreign estate (as those terms are defined in the Internal Revenue Code and Income Tax Regulations);

2. [*Name of interest-holder*]'s U.S. employer identification number is _____; and

3. [*Name of interest-holder*]'s office address is

_____

and place of incorporation (if applicable) is

_____

[*Name of interest holder*] agrees to inform [*name of entity*] if it becomes a foreign person at any time during the three year period immediately following the date of this notice.

[*Name of interest-holder*] understands that this certification may be disclosed to the Internal Revenue Service by [*name of entity*] and that any false statement contained herein could be punished by fine, imprisonment, or both.

Under penalties of perjury I declare that I have examined this certification and to the best of my knowledge and belief it is true, correct, and complete, and I further declare that I have authority to sign this document on behalf of [*name of interest-holder*].

[*Signature and date*]

[*Title*]''

(iii) *Reliance upon certification not permitted*. An entity or fiduciary may not rely upon an interest-holder's certification of non-foreign status if, prior to or at the time of the transfer with respect to which withholding would be required, the entity or fiduciary either—

(A) Has actual knowledge that the certification is false;

(B) Has received a notice that the certification is false from a transferor's or transferee's agent, pursuant to §1.1445–4; or

(C) Has received from a corporation that it knows to be a foreign corporation a certification that does not have attached to it a copy of the IRS acknowledgment of the corporation's election under section 897(i), as required by paragraph (b)(3)(ii)(C) of this section. Such an entity's or fiduciary's withholding obligations shall apply as if a statement had never been given, and such an entity or fiduciary may be held fully liable pursuant to §1.1445–1(e) for any failure to withhold. For special rules concerning an entity's belated receipt of a notice concerning a false certification, see paragraphs (c)(2)(ii) and (e)(2)(iii) of this section.

(4) *Property transferred not a U.S. real property interest*—(i) *In general*. Pursuant to the provisions of paragraphs (c) and (d) of this section, an entity or fiduciary is required to withhold with respect to certain transfers of property, if the property transferred is a U.S. real property interest. (In addition, taxable distributions of U.S. real property interests by domestic or foreign partnerships, trusts, and estates will be subject to withholding pursuant to section 1445(e)(4) and paragraph (f) of this section after publication of a Treasury decision under sections 897 (e)(2) and (g). As defined in section 897(c) and §1.897–1(c), a U.S. real property interest includes certain interests in U.S. corporations, as well as direct interests in real property and certain associated personal property. This paragraph (b)(4) provides rules pursuant to which an entity (or fiduciary thereof) that transfers an interest in a U.S. corporation may determine that withholding is not required because the interest transferred is not a U.S. real property interest. To determine whether an interest in tangible property constitutes a U.S. real property interest the transfer of which would be subject to withholding, see §1.897–1 (b) and (c).

(ii) *Interests in publicly traded entities*. Withholding is not required under paragraph (c) or (d) of this section upon an entity's transfer of an interest in a domestic corporation if any class of stock of the corporation is regularly traded on an established securities market. This exemption shall apply to

a disposition incident to an initial public offering of stock pursuant to a registration statement filed with the Securities and Exchange Commission.

Similarly, no withholding is required under paragraph (c) or (d) of this section upon an entity's transfer of an interest in a publicly traded partnership or trust. However, the rule of this paragraph (b)(4)(ii) shall not apply to the transfer, to a single transferee (or related transferees as defined in §1.897–1(i)) in a single transaction (or related transactions), of an interest described in §1.897–1(c)(2)(iii)(B) (relating to substantial amounts of non-publicly traded interests in publicly traded corporations) or of similar interests in publicly traded partnerships or trusts. The entity making a transfer described in the preceding sentence must otherwise determine whether withholding is required, pursuant to section 1445(e) and the regulations thereunder. Transactions shall be deemed to be related if they are undertaken within 90 days of one another or if it can otherwise be shown that they were undertaken in pursuance of a prearranged plan.

(iii) *Corporation's statement that interest is not a U.S. real property interest.* (A) *In general.* No withholding is required under paragraph (c) or (d) of this section upon an entity's transfer of an interest in a domestic corporation if, prior to the transfer, the entity or fiduciary obtains a statement, issued by the corporation pursuant to §1.897–2(h), certifying that the interest is not a U.S. real property interest. In general, a corporation may issue such a statement only if the corporation was not a U.S. real property holding corporation at any time during the previous five years (or the period in which the interest was held by its present holder, if shorter) or if interests in the corporation ceased to be United States real property interests under section 897(c)(1)(B). (A corporation may not provide such a statement based on its determination that the interest in question is an interest solely as a creditor.) See §1.897–2 (f) and (h). A corporation's statement may be relied upon for purposes of this paragraph (b)(4)(iii) only if the statement is dated not more than 30 days prior to the date of the transfer.

(B) *Reliance on statement not permitted.* An entity or fiduciary is not entitled to rely upon a statement that an interest in a corporation is not a U.S. real property interest, if, prior to or at the time of the transfer, the entity or fiduciary either—

(*1*) Has actual knowledge that the statement is false, or

(*2*) Receives a notice that the statement is false from a transferor's or transferee's agent, pursuant to §1.1445–4.

Such an entity's or fiduciary's withholding obligations shall apply as if a statement had never been given, and such an entity or fiduciary may be held fully liable pursuant to §1.1445–1(e) for any failure to withhold. For special rules concerning an entity's belated receipt of a notice concerning a false statement, see paragraphs (c)(2)(iii) and (d)(2)(i) of this section.

(5) *Reporting and paying over of withheld amounts*—(i) *In General.* An entity or fiduciary must report and pay over to the Internal Revenue Service any tax withheld pursuant to section 1445(e) and this section by the 20th day after the date of the transfer (as defined in §1.1445–1(g)(8). Forms 8288 and 8288–A are used for this purpose and must be filed with the Internal Revenue Service Center, Philadephia, PA 19255. The contents of Forms 8288 and 8288–A are described in §1.1445–1(d). Pursuant to section 7502 and regulations thereunder, the timely mailing of Forms 8288 and 8288–A by U.S. mail will be treated as their timely filing. Form 8288–A will be stamped by the Internal Revenue Service to show receipt, and a stamped copy will be mailed by the Service to the interest-holder, at the address shown on the form, for the interest-holder's use. See paragraph (b)(7) of this section. If an application for a withholding certificate with respect to a transfer of a U.S. real property interest was submitted to the Internal Revenue Service on the day of or at any time prior to the transfer, the entity or fiduciary must withold the amount required under section 1445(e) and the rules of this section. However, the amount withheld, or a lesser amount as determined by the Service, need not be reported and paid over to the Service

until the 20th day following the Service's final determination. For this purpose, the Service's final determination occurs on the day when the withholding certificate is mailed to the applicant by the Service or when a notification denying the request for a withholding certificate is mailed to the applicant by the Service. An application is submitted to the Service on the day it is actually received by the Service at the address provided in § 1.1445–1(g)(10) or, under the rules of section 7502, on the day it is mailed to the Service at the address provided in § 1.1445–1(g)(10). For rules concerning the issuance of withholding certificates, see § 1.1445–6.

(ii) *Anti-abuse rule.* An entity or fiduciary that in reliance upon the rules of this paragraph (b)(5)(ii) fails to report and pay over amounts withheld by the 20th day following the date of the transfer, shall be subject to the payment of interest and penalties if the relevant application for a withholding certificate (or an amendment of the application for a withholding certificate) was submitted for a principle purpose of delaying the payment to the IRS of the amount withheld. Interest and penalties shall be assessed on the amount that is ultimately paid over, with respect to the period between the 20th day after the date of the transfer and the date on which payment is made.

(6) *Liability upon failure to withhold.* For rules regarding liability upon failure to withhold under section 1445(e) and this § 1.1445–5, see § 1.1445–1(e).

(7) *Effect of withholding by entity or fiduciary upon interest holder.* The withholding of tax under section 1445(e) does not excuse a foreign person that is subject to U.S. tax by reason of the operation of section 897 from filing a U.S. tax return. Thus, Form 1040NR. 1041. or 1120F, as appropriate must be filed and any tax due must be paid, by the filing date otherwise applicable to such person (or any extension thereof). The tax withheld with respect to the foreign person under section 1445(e) (as shown on Form 8288–A) shall be credited against the amount of income tax as computed in such return, but only if the stamped copy of Form 8288–A provided to the entity or fiduciary (under paragraph (b)(5) of this section) is attached to the return or substantial evidence of the amount of tax withheld is attached to the return in accordance with the succeeding sentence. If a stamped copy of Form 8288–A has not been provided to the interest-holder by the Service, the interest-holder may establish the amount of tax withheld by the entity or fiduciary by attaching to its return substantial evidence of such amount. Such an interestholder must attach to its return a statement which supplies all of the information required by § 1.1445–1(d) (2) (expect such information that was not obtained by a diligent effort.) If the amount withheld under section 1445(e) constitutes less than the full amount of the foreign person's U.S. tax liability for that taxable year, then a payment of estimated tax may be required to be made pursuant to section 6154 or 6654 prior to the filing of the income tax return for the year. Alternatively, if the amount withheld under section 1445(e) exceeds the foreign person's maximum tax liability with respect to the transaction (*as reflected* in a withholding certificate issued by the Internal Revenue Service pursuant to § 1.1445–6), then the foreign person may seek an early refund of the excess pursuant to § 1.1445–6(g). A foreign person that takes gain into account in accordance with the provisions of section 453 shall not be entitled to a refund to the amount withheld, unless a withholding certificate providing for such a refund is obtained pursuant to § 1.1445–6. If an entity or fiduciary withholds tax under section 1445(e) with respect to a beneficial owner of an interest who is not a foreign person, such beneficial owner may credit the amount of any tax withheld against his income tax liability in accordance with the provisions of this § 1.1445–5(b)(7) or apply for an early refund under § 1.1445–6(g).

(8) *Effective dates*—(i) *Partnership, trust, and estate dispositions of U.S. real property interests.* The provisions of section 1445(e)(1) and paragraph (c) of this section, requiring withholding upon certain dispositions of U.S. real property interests by domestic partnerships, trusts, and estates, shall apply to any disposition on or after January 1, 1985.

(ii) *Certain distributions by foreign corporations.* The provisions of section

1445(e)(2) and paragraph (d) of this section, requiring withholding upon distributions of U.S. real property interests by foreign corporations shall apply to distributions made on or after January 1, 1985.

(iii) *Distributions by certain domestic corporations to foreign shareholders.* The provisions of section 1445(e)(3) and paragraph (e) of this section, requiring withholding upon distributions by U.S. real property holding corporations to foreign shareholders, shall apply to distributions made on or after January 1. 1985.

(iv) *Taxable distributions by domestic or foreign partnerships, trusts, and estates.* The provisions of section 1445(e)(4), requiring withholding upon certain taxable distributions by domestic or foreign partnerships, trusts, and estates, shall apply to distributions made on or after the effective date of a Treasury decision under section 897 (e)(2)(B)(ii) and (g).

(v) [Reserved]

(vi) *Tiered Partnerships.* No withholding is required upon the disposition of a U.S. real property interest by a partnership which is directly owned, in whole or in part, by another domestic partnership (but only to the extent that the amount realized is attributable to the partnership interest of that other partnership) until the effective date of a Treasury Decision published under section 1445(e) providing rules governing this matter.

(c) *Dispositions of U.S. real property interests by domestic partnerships, trusts, and estates*—(1) *Withholding required*—(i) *In general.* If a domestic partnership, trust, or estate disposes of a U.S. real property interest and any partner, beneficiary, or owner of the entity is a foreign person, then the partnership or the trustee, executor, or equivalent fiduciary of the trust or estate must withhold tax with respect to each such foreign person in accordance with the provisions of subdivision (ii), (iii), or (iv), of this paragraph (c)(1) (as applicable). The withholding obligation imposed by this paragraph (c) applies to the fiduciary of a trust even if the grantor of the trust or another person is treated as the owner of the trust or any portion thereof for purposes of the Internal Revenue Code. Thus, the withholding obligation imposed by this paragraph (c) applies to the trustee of a land trust or similar arrangement, even if such a trustee is not ordinarily treated under the applicable provisions of local law as a true fiduciary.

(ii) *Disposition by partnership.* A partnership must withhold a tax equal to 35 percent (or the highest rate specified in section 1445(e)(1)) of each foreign partner's distributive share of the gain realized by the partnership upon the disposition of each U.S. real property interest. Such distributive share of the gain must be determined pursuant to the principles of section 704 and the regulations thereunder. For the rules applicable to partnerships, interests in which are regularly traded on an established securities market, see § 1.1445–8.

(iii) *Disposition by trust or estate.*—(A) *In general.* A trustee, fiduciary, executor or equivalent fiduciary (hereafter collectively referred to as the fiduciary) of a trust or estate having one or more foreign beneficiaries must withhold tax in accordance with the rules of this § 1.1445–5(c)(1)(iii). Such a fiduciary must establish a U.S. real property interest account and must enter in such account all gains and losses realized during the taxable year of the trust or estate from dispositions of U.S. real property interests. The fiduciary must withhold 35 percent (or the highest rate specified in section 1445(e)(1)) of any distribution to a foreign beneficiary that is attributable to the balance in the U.S. real property interest account on the day of the distribution. A distribution from a trust or estate to a beneficiary (domestic or foreign) shall, solely for purposes of section 1445(e)(1), be deemed to be attributable first to any balance in the U.S. real property interest account and then to other amounts. However, a distribution that occurs prior to the transfer of a U.S. real property interest in a taxable year or at any other time when the amount contained in the U.S. real property interest account is zero, is not subject to withholding under this § 1.1445–5(c)(1)(iii). The U.S. real property interest account is reduced by the amount distributed to all beneficiaries (domestic and foreign) attributable to such account during the taxable year of the trust or estate. Any

ending balance of the U.S. real property interest account not distributed by the close of the taxable year of the trust or estate is cancelled and is not carried over (or carried back) to any other year. Thus, the beginning balance of such account in any taxable year of the trust or estate is always zero. For rules applicable to grantor trusts see §1.1445–5(c)(1)(iv). For rules applicable to trusts, interests in which are regularly traded on an established securities market and real estate investment trusts, see §1.1445–8.

(B) *Example.*The following example illustrates the rules of paragraph (c)(1)(iii)(A) of this section.

On January 1, 1994, A establishes a domestic trust (which has as its taxable year, the calendar year) for the benefit of B, a nonresident alien, and C, a U.S. citizen. The trust is not a trust subject to sections 671 through 679. Under the terms of the trust, the trustee, T, is given discretion to distribute income and corpus of the trust to provide for the reasonable needs of B and C. During the trust's 1994 tax year, T disposes of three parcels of vacant land located in the United States. The following chart illustrates the computation of the amount subject to withholding under section 1445 with respect to distributions made by T to B and C during 1994.

Date	Parcel sold	Gains or (loss) realized	Distributions to C	Distributions to B (before withholding)	Section 1445 withholding 35% rate	U.S. real property interest account
1/01/94						-0-
3/01/94	Parcel 1	140,000				140,000
3/05/94			5,000	10,000	3,500	125,000
3/15/94			10,000	5,000	1,750	110,000
5/01/94	Parcel 2	300,000				410,000
5/15/94	Parcel 3	(50,000)				360,000
12/01/94			170,000	170,000	59,500	20,000
1/01/95						-0-

(iv) *Disposition by grantor trust.* The trustee or equivalent fiduciary of a trust that is subject to the provisions of subpart E of part 1 of subchapter J (sections 671 through 679) must withhold a tax equal to 35 percent (or the highest rate specified in section 1445(e)(1)) of the gain realized from each disposition of a U.S. real property interest to the extent such gain is allocable to a portion of the trust treated as owned by a foreign person under subpart E of part 1 of subchapter J.

(2) *Withholding not required under paragraph (c)*—(i) [Reserved]

(ii) *Interest-holder not a foreign person*—(A) *In general.* A domestic partnership, trust, or estate that disposes of a U.S. real property interest shall not be required to withhold with respect to any partner or beneficiary that it determines, pursuant to the rules of paragraph (b)(3) of this section, not to be a foreign person.

(B) *Belated notice of false certification.* If after the date of the transfer a partnership or fiduciary learns that a partner's or beneficiary's certification of non-foreign status is false, then that partnership or fiduciary shall be required to withhold, with respect to the foreign partner or beneficiary that gave the false certification, the lessor of—

(*1*) The amount otherwise required to be withheld under the rules of this paragraph (c), or

(*2*) An amount equal to that partner's or beneficiary's remaining interests in the income or assets of the partnership, trust, or estate. Amounts so withheld must be reported and paid over by the 60th day following the date on which the partnership or fiduciary learns that the certification is false. For rules concerning the notifications of false certifications that may be required to be given to partnerships and fiduciaries, see §1.1445–4(b).

(iii) *Property disposed of not a U.S. real property interest*—(A) *In general.* No withholding is required under this paragraph (c) if a domestic partnership, trust, or estate that disposes of property determines pursuant to the rules of paragraph (b)(4) of this section that the property disposed of is not a U.S. real property interest.

(B) *Belated notice of false statement.* If after the date of the transfer a partnership or fiduciary learns that a corporation's statement (that an interest in the corporation is not a U.S. real property interest) is false, then that partnership or fiduciary shall be required to withhold, with respect to each foreign partner or beneficiary, the lesser of—

(*1*) The amount otherwise required to be withheld under the rules of this paragraph (c), or

(*2*) An amount equal to that partner's or beneficiary's remaining interests in the income or assets of the parnership, trust, or estate.

Amounts so withheld must be reported and paid over by the 60th day following the date on which the partnership or fiduciary learns that the statement is false. For rules concerning the notifications of false statements that may be required to be given to partnerships or fiduciaries, see §1.1445–4(b).

(iv) *Withholding certificate.* No withholding is required under this paragraph (c) with respect to the transfer of a U.S. real property interest if the Internal Revenue Service issues a withholding certificate that so provides. For rules concerning the issuance of withholding certificates, see §1.1445–6.

(v) *Nonrecognition transactions.* For special rules concerning transactions entitled to nonrecognition of gain or loss, see paragraph (b)(2) of this section.

(3) *Large partnerships or trusts*—(i) *In general.* If a partnership or trust has more than 100 partners or beneficiaries, then the partnership or fiduciary of the trust may elect to withhold in accordance with the provisions of this §1.1445–5(c)(3) in lieu of withholding in the manner required by §1.1445–5(c)(1). However, the rules of this §1.1445–5(c)(3) shall not apply to any partnership or trust interests in which are regularly traded on an established securities market except as described in §1.1445–8(c)(1). The rules of this §1.1445–5(c)(3) shall not apply to any real estate investment trust. See §1445–8.

(ii) *Amount to be withheld.* A partnership or trust electing to withhold under this §1.1445–5(c)(3) shall withhold from each distribution to a foreign person an amount equal to 35 percent (or the highest rate specified in section 1445(e)(1)) of the amount attributable to section 1445(e)(1) transfers.

(iii) *Amounts attributable to section 1445(e)(1) transfers.* A distribution is attributable to section 1445(e)(1) transfers to the extent of the partner's or beneficiary's proportionate share of the current balance of the entity's section 1445(e)(1) account. A distribution from a partnership or trust that has made an election under this §1.1445–5(c)(3) shall be deemed first to be attributable to a section 1445(e)(1) transfer to the extent of the balance in the section 1445(e)(1) account. An entity's section 1445(e)(1) account shall be equal to—

(A) The total amount of net gain realized by the entity upon all transfers of U.S. real property interests carried out by the entity after the date of its election under this §1.1445–5(c)(3); minus

(B) The total amount of all distributions by the entity to domestic and foreign distributees from such account.

(iv) *Special rules for entities that make recurring sales of growing crops and timber.* An entity that makes an election under §1.1445–5(c)(3) and that makes recurring sales of growing crops and timber may further elect to determine the amount subject to withholding under the rules of this §1.1445–5(c)(3)(iv). Such an entity must withhold from each distribution to a foreign partner or beneficiary an amount equal to 10 percent of such partner's or beneficiary's proportionate share of the current balance of the entity's gross section 1445(e)(1) account. An entity's gross section 1445(e)(1) account equals—

(A) The total amount realized by the entity upon all transfers of U.S. real property interests carried out by the entity after the date of its election under this §1.1445–5(c)(3)(iv); minus

(B) The total amount of all distributions to domestic and foreign distributees from such account.

An entity that elects to compute the amount subject to withholding under this §1.1445–5(c)(3)(iv), shall make such election in accordance with §1.1445–5(c)(3)(vi) and shall be subject to the provisions otherwise applicable under §1.1445–5(c)(3).

(v) *Procedural rules.* An election under paragraph (c)(3) may be made by filing

a notice thereof with the Assistant Commissioner (International), at the address provided in § 1.1445–1(g)(10). The notice must be submitted by a general partner (in the case of a partnership) or the trustee or equivalent fiduciary (in the case of a trust). The notice must set forth the name, office address, and identifying number of the partnership or fiduciary making the election, and, in the case of a partnership, must include the name, office address, and identifying number of the general partner submitting the election. An election under this paragraph (c)(3) may be revoked only with the consent of the Internal Revenue Service. Consent of the Service may be requested by filing an application to revoke the election with the Assistant Commissioner (International) at the address stated above. This application must include all information provided to the Service with the election notice and must provide an explanation of the reasons for revoking the election. The application to revoke an election must also specify the amount remaining to be distributed in the section 1445(e)(1) account or the gross section 1445(e)(1) account.

An entity that ceases to qualify under section 1.1445–5(c)(3) because such entity does not have more than 100 partners or beneficiaries may revoke its election only with the consent of the Internal Revenue Service.

(d) *Distributions of U.S. real property interests by foreign corporations*—(1) *In general.* A foreign corporation that distributes a U.S. real property interest must deduct and withhold a tax equal to 35 percent (or the rate specified in section 1445(e)(2)) of the amount of gain recognized by the corporation on the distribution. The amount of gain required to be recognized by the corporation must be determined pursuant to the rules of section 897 and any other applicable section. For special rules concerning the applicability of a nonrecognition provision to a distribution, see paragraph (b)(2) of this section. The withholding liability imposed by this paragraph (d) applies to the same taxpayer that owes the related substantive income tax liability pursuant to the operation of section 897. Only one such liability will be assessed and collected from a foreign corporation, but separate penalties for failures to comply with the two requirements will be asserted.

(2) *Withholding not required*—(i) *Property distributed not a U.S. real property interest*—(A) *In general.* No withholding is required under this paragraph (d) if a foreign corporation that distributes property determines pursuant to the rules of paragraph (b)(3) of this section that the property distributed is not a U.S. real property interest.

(B) *Belated notice of false statement.* If after the date of a distribution described in paragraph (d)(1) of this section a foreign corporation learns that another corporation's statement (that an interest in that other corporation is not a U.S. real property interest) is false, then the foreign corporation may not rely upon that statement for any purpose. Such a foreign corporation's withholding obligations under this paragraph (d) shall apply if a statement had never been given, and such a corporation may be held fully liable pursuant to § 1.1445–5(b)(5) for any failure to withhold. Amounts withheld pursuant to the rule of this paragraph (d)(2)(i)(B) must be reported and paid over by the 60th day following the date on which the foreign corporation learns that the statement is false. No penalties or interest will be assessed for failures to withhold prior to that date. For rules concerning the notifications of false statements that may be required to be given to foreign corporations, see § 1.1445–4(b).

(ii) *Withholding certificate.* No withholding is required under this paragraph (d) with respect to a foreign corporation's distribution of a U.S. real property interest if the distributing corporation obtains a withholding certificate from the Internal Revenue Service that so provides. For rules concerning the issuance of withholding certificates, see § 1.1445–6.

(e) *Distributions to foreign persons by U.S. real property holding corporations*—(1) *In general.* A domestic corporation that distributes any property to a foreign person that holds an interest in the corporation must deduct and withhold a tax equal to 10 percent of the fair market value of the property distributed to the foreign person, if—

(i) The foreign person's interest in the corporation constitutes a U.S. real property interest under the provisions of section 897 and regulations thereunder; and

(ii) The property is distributed either—

(A) In redemption of stock under section 302; or

(B) In liquidation of the corporation pursuant to the provisions of part II of subchapter C (sections 331 through 341). For the treatment of a domestic corporation's transfer of a U.S. real property interest to a foreign interest-holder in a distribution to which section 301 applies, see sections 897(f), 1441, and 1442.

(2) *Withholding not required*—(i) *Foreign person's interest not a U.S. real property interest.* Withholding is required under this paragraph (e) only with respect to distributions to foreign persons holding interests in the corporation that constitute U.S. real property interests. In general, a foreign person's interest in a domestic corporation constitutes a U.S. real property interest if the corporation was a U.S real property holding corporation at any time during the shorter of (A) the period in which the foreign person held the interest or (B) the previous five years (but not earlier than June 19, 1980). See section 897(c) and §§1.897–1(c) and 1.897–2 (b) and (h). However, an interest in such a corporation ceases to be a U.S. real property interest after all of the U.S. real property interests held by the corporation itself are disposed of in transactions on which gain or loss is recognized. See section 897(c)(1)(B) and §1.897–2(f)(2). Thus, if a U.S. real property holding corporation in the process of liquidation does not elect section 337 nonrecognition treatment upon its sale of all U.S. real property interests held by the corporation, and recognizes gain or loss upon such sales, interests in that corporation cease to be U.S. real property interests. Therefore, no withholding would be required with respect to that corporation's subsequent liquidating distribution to a foreign shareholder of property other than a U.S. real property interest.

(ii) *Nonrecognition transactions.* For special rules concerning the applicability of a nonrecognition provision to a distribution described in paragraph (e)(1) of this section, see paragraph (b)(2) of this section.

(iii) *Interest-holder not a foreign person*—(A) *In general.* A domestic corporation shall not be required to withhold under this paragraph (e) with respect to a distribution of property to any distributee that it determines, pursuant to the rules of paragraph (b)(3) of this section, not to be a foreign person.

(B) *Belated notice of false certification.* If after the date of a distribution described in paragraph (e)(1) of this section a domestic corporation learns that an interest-holder's certification of non-foreign status is false, then the corporation may rely upon that certification only if the person providing the false certification holds (or held) less than 10 percent of the value of the outstanding stock of the corporation. With respect to less than 10 percent interest-holders, no withholding is required under this paragraph (e) upon receipt of a belated notice of false certification. With respect to 10 percent or greater interest-holders, the corporation's withholding obligations under this paragraph (e) shall apply as if a certification had never been given, and such a corporation may be held fully liable pursuant to §1.1445–5(b)(6) for any failure to withhold as of the date specified in this §1.1445–5(e)(2)(iii)(B). Amounts withheld pursuant to the rule of this paragraph (e)(2)(iii)(B) must be reported and paid over by the 60th day following the date on which the corporation learns that the certification is false. No penalties or interest for failures to withhold will be assessed prior to that date. For rules concerning the notifications of false certifications that may be required to be given to U.S. real property holding corporations, see §1.1445–4(b).

(iv) *Withholding certificate.* No withholding, or reduced withholding, is required under this paragraph (e) with respect to a domestic corporation's distribution of property if the distributing corporation obtains a withholding certificate from the Internal Revenue Service that so provides. For rules concerning the issuance of withholding certificates, see §1.1445–6.

(f) *Taxable distributions by domestic or foreign partnerships, trusts, or estates.* [Reserved]

(g) *Dispositions of interests in partnerships, trusts, and estates.* [Reserved]

[T.D. 8113, 51 FR 46642, Dec. 24, 1986; 52 FR 3796, 3917, Feb. 6, 1987, as amended at T.D. 8198, 53 FR 16230, May 5, 1988; T.D. 8321, 55 FR 50553, Dec. 7, 1990; T.D. 8647, 60 FR 66076, Dec. 21, 1995; 61 FR 7157, Feb. 26, 1996; T.D. 8734, 62 FR 53467, Oct. 14, 1997]

§ 1.1445–6 Adjustments pursuant to withhold certificate of amount required to be withheld under section 1445(e).

(a) *Withholding certificate for purposes of section 1445(e)*—(1) *In general.* Pursuant to the provisions of § 1.1445–5 (c)(2)(iv), (d)(2)(ii), and (e)(2)(iv), withholding under section 1445(e) may be reduced or eliminated pursuant to a withholding certificate issued by the Internal Revenue Service in accordance with the rules of this § 1.1445–6. A withholding certificate may be issued in cases where adjusted withholding is appropriate (e.g., because of the applicability of a nonrecognition provision—see paragraph (c) of this section), where the relevant taxpayers are exempt from U.S. tax (see paragraph (d) of this section), or where an agreement for the payment of tax is entered into with the Service (see paragraph (e) of this section). A withholding certificate that is obtained prior to a transfer allows the entity or fiduciary to withhold a reduced amount or excuses withholding entirely. A withholding certificate that is obtained after a transfer has been made may authorize a normal refund or an early refund pursuant to paragraph (g) of this section. The Internal Revenue Service will act upon an application for a withholding certificate not later than the 90th day after it is received. (The Service may deny a request for a withholding certificate where, after due notice, an applicant fails to provide the information necessary to make a determination.) Solely for this purpose (i.e., determining the day upon which the 90 day period commences), an application is received by the Service on the date when all information necessary for the Service to make a determination is provided by the applicant. (For rules regarding whether an application has been timely submitted, see § 1.1445–5(b)(5)). The Internal Revenue Service will act upon an application for an early refund not later than the 90th day after it is received. An application for an early refund must either (i) include a copy of a withholding certificate issued by the Service with respect to the transaction, or (ii) be combined with an application for a withholding certificate. Where an application for an early refund is combined with an application for a withholding certificate, the Service will act upon both applications not later than the 90th day after receipt. Either an entity, a fiduciary, or a relevant taxpayer (as defined in paragraph (a)(2) of this section) may apply for a withholding certificate. An entity or fiduciary may apply for a withholding certificate with respect to all or less than all relevant taxpayers. For special rules concerning the issuance of a withholding certificate to a foreign corporation that has made an election under section 897(i), see § 1.1445–7(d).

(2) *Relevant taxpayer.* For purposes of this section, the term ''relevant taxpayer'' means any foreign person that will bear substantive income tax liability by reason of the operation of section 897 with respect to a transaction upon which withholding is required under section 1445(e).

(b) *Applications for withholding certificates*—(1) *In general.* An application for a withholding certificate pursuant to this § 1.1445–6 must be submitted in the manner provided in § 1.1445—3 (b). However, in lieu of the information required to be submitted pursuant to § 1.1445–3(b)(4), the applicant must provide the information required by paragraph (b)(2) of this section. In addition, the information required by paragraph (b)(3) of this section must be submitted with the application.

(2) *Basis for certificate*—(i) *Adjusted withholding.* If a withholding certificate is sought on the basis of a claim that adjusted withholding is appropriate, the application must include a calculation, in accordance with paragraph (c) of this section, of the maximum tax that may be imposed on each relevant

taxpayer with respect to which adjusted withholding is sought. The application must also include all evidence necessary to substantiate the claimed calculation, such as records of adjustments to basis or appraisals of fair market value.

(ii) *Exemption*. If a withholding certificate is sought on the basis of a relevant taxpayer's exemption from U.S. tax, the application must set forth a brief statement of the law and facts that support the claimed exemption. See paragraph (d) of this section.

(iii) *Agreement*. If a withholding certificate is sought on the basis of an agreement for the payment of tax, the application must include a copy of the agreement proposed by the applicant and a copy of the security instrument (if any) proposed by the applicant. In this regard, see paragraph (e) of this section.

(3) *Relevant taxpayers*. An application for withholding certificate pursuant to this section must set forth the name, identifying number (if any) and home address (in the case of an individual) or office address (in the case of an entity) of each relevant taxpayer with respect to which adjusted withholding is sought.

(c) *Adjustment of amount required to be withheld*. The Internal Revenue Service may issue a withhold certificate that excuses withholding or that permits an entity or fiduciary to withhold an adjusted amount reflecting the relevant taxpayers' maximum tax liability. A relevant taxpayer's maximum tax liability is the maximum amount which that taxpayer could be required to pay as tax by reason of the transaction upon which withholding is required. In the case of an individual taxpayer that amount will generally be the gain realized by the individual, multiplied by the maximum individual income tax rate applicable to long term capital gain. In the case of a corporate taxpayer, that amount will generally be the gain realized by the corporation, multiplied by the maximum corporate income tax rate applicable to long term capital gain. However, that amount must be adjusted to take into account the following:

(1) Any reduction of tax to which the relevant taxpayer is entitled under the provisions of a U.S. income tax treaty;

(2) The effect of any nonrecognition provision that is applicable to the transaction;

(3) Any losses previously realized and recognized by the relevant taxpayer during the taxable year by reason of the operation of section 897;

(4) Any amount realized upon the subject transfer by the relevant taxpayer that is required to be treated as ordinary income under any provision of the Code; and

(5) Any other factor that may increase or reduce the tax upon the transaction.

(d) *Relevant taxpayer's exemption from U.S. tax*—(1) *In general*. The Internal Revenue Service will issue a withholding certificate that excuses withholding by an entity or fiduciary if it is established that a relevant taxpayer's income from the transaction will be exempt from U.S. tax. For the available exemptions, see paragraph (d)(2) of this section. If a relevant taxpayer is entitled to a reduction of (rather than an exemption from) U.S. tax, then the entity or fiduciary may obtain a withholding certificate to that effect pursuant to the provisions of paragraph (c) of this section.

(2) *Available exemptions*. A relevant taxpayer's income from a transaction with respect to which withholding is required under section 1445(e) may be exempt from U.S. tax because either:

(i) The relevant taxpayer is an integral part or controlled entity of a foreign government and the subject income is exempt from U.S. tax pursuant to section 892 and the regulations thereunder; or

(ii) The relevant taxpayer is entitled to the benefits of an income tax treaty that provides for such an exemption (subject to the limitations imposed by section 1125(c) of Pub. L. 96–499, which, in general overrides such benefits as of January 1, 1985).

(e) *Agreement for the payment of tax*—(1) *In general*. The Internal Revenue Service will issue a withholding certificate that excuses withholding or that permits an entity or fiduciary to withhold a reduced amount, if the entity, fiduciary, or a relevant taxpayer enters

into an agreement for the payment of tax pursuant to the provisions of this paragraph (e). An agreement for the payment of tax is a contract between the Service and the entity, fiduciary, or relevant taxpayer that consists of two necessary elements. Those elements are—

(i) A contract between the Service and the other person, setting forth in detail the rights and obligations of each; and

(ii) A security instrument or other form of security acceptable to the Assistant Commissioner (International).

(2) *Contents of agreement*—(i) *In general.* An agreement for the payment of tax must cover an amount described in subdivision (ii) or (iii) of this paragraph (e)(2). The agreement may either provide adequate security for the payment of the chosen amount with respect to the relevant taxpayer in accordance with paragraph (e)(3) of this section or provide for the payment of that amount through a combination of security and withholding of tax by the entity or fiduciary.

(ii) *Tax that would otherwise be withheld.* An agreement for the payment of tax may cover the amount of tax that would otherwise be required to be withheld with respect to the relevant taxpayer pursuant to section 1445(e). In addition to the amount computed pursuant to section 1445(e), the applicant must agree to pay interest upon that amount, at the rate established under section 6621, with respect to the period between the date on which withholding tax under section 1445(e) would otherwise be due and the date on which the relevant taxpayer's payment of tax with respect to the disposition will be due. The amount of interest agreed upon must be paid by the applicant regardless of whether or not the Service is required to draw upon any security provided pursuant to the agreement. The interest may be paid either with the return or by the Service drawing upon the security.

(iii) *Maximum tax liability.* An agreement for the payment of tax may cover the relevant taxpayer's maximum tax liability, determined in accordance with paragraph (c) of this section. The agreement must also provide for the payment of an additional amount equal to 25 percent of the amount determined under paragraph (c) of this section. This additional amount secures the interest and penalties that would accrue between the date of the relevant taxpayer's failure to file a return and pay tax with respect to the disposition, and the date of which the Service collects upon that liability pursuant to the agreement.

(iv) *Allocation of payment.* An agreement for the payment of tax pursuant to this section must set forth an allocation of the payment provided for by the agreement among the relevant taxpayers with respect to which the withholding certificate is sought. In the case of an agreement that covers an amount described in subdivision (ii) of this paragraph (e)(2), such allocation must be based upon the amount that would otherwise be required to be withheld with respect to each relevant taxpayer. In the case of an agreement that covers an amount described in subdivision (iii) of this paragraph (e)(2), such allocation must be based upon each relevant taxpayer's maximum tax liability.

(3) *Major types of security.* The major types of security that are acceptable to the Internal Revenue Service for purposes of this section are described in § 1.1445–3(e)(3).

(4) *Terms of security instrument.* Any security instrument that is furnished pursuant to this section must contain the terms described in § 1.1445–3(e)(4).

(f) *Amendments to application for withholding certificates*—(1) *In general.* An applicant for a withholding certificate may amend an otherwise complete application by submitting an amending statement to the Assistant Commissioner (International) at the address provided in § 1.1445–1(g)(10). The amending statement shall provide the information required by § 1.1445–6(f)(3) and must be signed and accompanied by a penalties of perjury statement in accordance with § 1.1445–6(b).

(2) *Extension of time for the Service to process requests for withholding certificates*—(i) *In general.* If an amending statement is submitted, the time in which the Internal Revenue Service must act upon the amended application shall be extended by 30 days.

(ii) *Substantial amendments.* If an amending statement is submitted and the Service finds that the statement substantially amends to the facts of the underlying application or substantially alters the terms of the withholding certificate as requested in the initial application, the time within which the Service must act upon the amended application shall be extended by 60 days. The applicant shall be so notified.

(iii) *Amending statement received after the requested withholding certificate has been signed by the Assistant Commissioner (International).* If an amending statement is received after the withholding certificate, drafted in response to the underlying application, has been signed by the Assistant Commissioner (International) or his delegate and prior to the day such certificate is mailed to the applicant, the time in which the Service must act upon the amended application shall be extended by 90 days.

(3) *Information required to be submitted.* No particular form is required for an amending statement but the statement must provide the following information:

(i) *Identification of applicant.* The amending statement must set forth the name, address, and identifying number (if any) of the person submitting the amending statement.

(ii) *Date of application.* The amending statement must set forth the date of the underlying application for a withholding certificate.

(iii) *Real property interest to be (or that has been) transferred.* The amending statement must set forth a brief description of the real property interest with respect to which the underlying application for a withholding certificate was submitted.

(iv) *Amending information.* The amending statement must fully set forth the basis for the amendment including any modification of the facts supporting the application for a withholding certificate and any change sought in the terms of the withholding certificate.

(g) *Early refund of overwithheld amounts.* If the Internal Revenue Service issues a withholding certificate pursuant to this section, and an amount greater than that specified in the certificate was withheld by the entity or fiduciary, then pursuant to the rules of this paragraph (g) a relevant taxpayer may apply for an early refund of a proportionate share of the excess amount (without interest) prior to the date on which the relevant taxpayer's return is due (without extensions). An application for an early refund must be addressed to the Assistant Commissioner (International), at the address provided in §1.1445–1(g)(10). No particular form is required for the application, but the following information must be set forth in separate paragraphs numbered to correspond with the numbers given below:

(1) Name, address, and identifying number (if any) of the relevant taxpayer seeking the refund;

(2) Amount required to be withheld pursuant to withholding certificate;

(3) Amount withheld by entity or fiduciary (attach a copy of Form 8288–A stamped by IRS pursuant to §1.1445–5(b)(4) or provide substantial evidence of the amount withheld in the case of a failure to receive Form 8288–A, as provided in §1.1445–5(b)(7)); and

(4) Amount to be refunded to the relevant taxpayer.

An application for an early refund cannot be processed unless the required copy of Form 8288–A or substantial evidence of the amount withheld in the case of a failure to receive Form 8288–A (as provided in §1.1445–5(b)(7)) is attached to the application. If an application for a withholding certificate is submitted after the transfer takes place, then that application may be combined with an application for an early refund. The Service will act upon a claim for refund within the time limits set forth in §1.1445–6(a)(1).

[T.D. 8113, 51 FR 46648, Dec. 24, 1986; 52 FR 3796, 3917, Feb. 6, 1987]

§1.1445–7 Treatment of foreign corporation that has made an election under section 897(i) to be treated as a domestic corporation.

(a) *In general.* Pursuant to section 897(i) a foreign corporation may elect to be treated as a domestic corporation for purposes of sections 897 and 6039C. A foreign corporation that has made such an election shall also be treated as a domestic corporation for purposes of

the withholding required under section 1445, in accordance with the provisions of this section.

(b) *Withholding under section 1445(a)*—(1) *Dispositions by corporation.* A foreign corporation that has made an election under section 897(i) may provide a transferee with a certification of nonforeign status in connection with the corporation's disposition of a U.S. real property interest. However, in accordance with the provisions of §§1.1445–2(b)(2)(ii) and 1.1445–5(b)(3)(ii)(C), such an electing foreign corporation must attach to such certification a copy of the acknowledgment of the election provided to the corporation by the Internal Revenue Service pursuant to §1.897–3(d)(4) which states that the information required by §1.897–3 has been determined to be complete.

(2) *Dispositions of interests in corporation.* Dispositions of interests in electing foreign corporations shall be subject to the withholding requirements of section 1445(a) and the rules of §§1.1445–1 through 1.1445–4. Therefore, if a foreign person disposes of an interest in such a corporation, and that interest is a U.S. real property interest under the provisions of section 897 and regulations thereunder, then the transferee is required to withhold under section 1445(a).

(c) *Withholding under section 1445(e).* Because a foreign corporation that has made an election under section 897(i) is treated as a domestic corporation for purposes of determining withholding obligations under section 1445, such a corporation is not subject to the requirement of section 1445(e)(2) that a foreign corporation withhold at the corporate capital gain rate from the gain recognized upon the distribution of a U.S. real property interest. Such a corporation is subject to the provisions of section 1445(e)(3). Thus, if interests in an electing corporation constitute U.S. real property interests, then the corporation is required to withhold with respect to the non-dividend distribution of any property to an interest-holder that is a foreign person. See §1.1445–5(e). Dividend distributions (distributions that are described in section 301) shall be treated as provided in sections 897(f), 1441 and 1442. In addition, if interests in an electing foreign corporation do not constitute U.S. real property interests, then distributions by such corporation shall be treated as provided in sections 897(f) (if applicable), 1441 and 1442.

(Approved by the Office of Management and Budget under control number 545–0902)

[T.D. 8113, 51 FR 46650, Dec. 24, 1986; 52 FR 3796, Feb. 6, 1987]

§1.1445–8 Special rules regarding publicly traded partnerships, publicly traded trusts and real estate investment trusts (REITs).

(a) *Entities to which this section applies.* The rules of this section apply to—

(1) Any partnership or trust, interests in which are regularly traded on an established securities market (regardless of the number of its partners or beneficiaries), and

(2) Any REIT (regardless of the form of its organization).

For purposes of paragraph (a)(1) of this section, the rules of section 1445 (e)(1) and this section shall not apply to a publicly traded partnership (as defined in section 7704) which is treated as a corporation under section 7704(a), or to those entities that are classified as ''associations'' and taxed as corporations. See §301.7701–2.

(b) *Obligation to withhold*—(1) *In general.* An entity described in paragraph (a) of this section is not required to withhold under the provisions of §1.1445–5(c), which states the withholding requirements of domestic partnerships, trusts and estates upon the disposition of U.S. real property interests. Except as otherwise provided in this paragraph (b), an entity described in paragraph (a) of this section shall be liable to withhold tax upon the distribution of any amount attributable to the disposition of a U.S. real property interest, with respect to each holder of an interest in the entity that is a foreign person. The amount to be withhold is described in paragraph (c) of this section.

(2) *Publicly traded partnerships.* Publicly traded partnerships which comply with the withholding procedures under section 1446 will be deemed to have satisfied their withholding obligations under this paragraph (b).

(3) *Special rule for certain distributions to nominees.* In the case of a person that—

(i) Is a nominee (as defined in paragraph (d) of this section),

(ii) Receives a distribution attributable to the disposition of a U.S. real property interest directly from an entity described in paragraph (a) of this section or indirectly from such entity through a nominee,

(iii) Receives the distribution for payment to any foreign person, or the account of any foreign person, and

(iv) Receives a qualified notice pursuant to paragraph (f) of this section,

then the obligation to withhold in accordance with the general rules of section 1445(e)(1) and this paragraph (b) shall be imposed solely on that person to the extent of the amount specified by the qualified notice. A person obligated to withhold by reason of this paragraph (b)(3) is referred to as a withholding agent.

(4) *Person designated to act for withholding agent.* The rules stated in §1.1441–7(b) (1) and (2) regarding a person designated to act for a withholding agent shall apply for purposes of this section.

(5) *Effect of withholding exemption granted under §1.1441–4(f).* A letter issued by a district director under the provisions of §1.1441–4(f), which exempts a person from withholding under section 1441 or section 1442, shall also exempt that person from withholding under this paragraph (b), if—

(i) The letter identifies another person as the withholding agent for purposes of section 1441 or 1442, and

(ii) Such other person enters into a written agreement, with the district director who issued the letter, to be the withholding agent for purposes of this paragraph (b).

The exemption granted, and the corresponding withholding obligation imposed, by this paragraph (b)(5) shall apply with respect to the first distribution made after execution of the agreement described in the preceding sentence and shall continue to apply to all distributions made during the period in which the exemption granted under §1.1441–4(f) is in effect.

(6) *Payment other than in money.* The rule stated in §1.1441–7(c) regarding payment other than in money shall apply for purposes of this section.

(c) *Amount to be withheld*—(1) *Distribution from a publicly traded partnership or publicly traded trust.* The amount to be withheld under this section with respect to a distribution by a publicly traded partnership or publicly traded trust shall be computed in the manner described in §1.1445–5(c)(3) (ii) and (iii), subject to the rules of this section.

(2) *REITs*—(i) *In general.* The amount to be withheld with respect to a distribution by a REIT, under this section shall be equal to 35 percent (or the highest rate specified in section 1445(e)(1)) of the amount described in paragraph (c)(2)(ii) of this section.

(ii) *Amount subject to withholding*—(A) *In general.* Except as otherwise provided in paragraph (c)(2)(ii)(C) of this section, the amount subject to withholding is the amount of any distribution, determined with respect to each share or certificate of beneficial interest, designated by a REIT as a capital gain dividend, multiplied by the number of shares or certificates of beneficial interest owned by the foreign person. Solely for purposes of this paragraph, the largest amount of any distribution occurring after March 7, 1991 that could be designated as a capital gain dividend under section 857(b)(3)(C) shall be deemed to have been designated by a REIT as a capital gain dividend regardless of the amount actually designated.

(B) *Distribution attributable to net short-term capital gain from the disposition of a U.S. real property interest.* [Reserved]

(C) *Designation of prior distribution as capital gain dividend.* If a REIT makes an actual designation of a prior distribution, in whole or in part, as a capital gain dividend, such prior distribution shall not be subject to withholding under this section. Rather, a REIT must characterize and treat as a capital gain dividend distribution (solely for purposes of section 1445(e)(1)) each distribution, determined with respect to each share or certificate of beneficial interest, made on the day of, or any time subsequent to, such designation as a capital gain dividend until such characterized amounts equal the

amount of the prior distribution designated as a capital gain dividend. The provisions of this paragraph shall not be applicable in any taxable year in which the REIT adopts a formal or informal resolution or plan of complete liquidation.

(iii) *Example*. The following example illustrates the rules of paragraph (c)(2)(ii)(C) of this section.

In the first quarter of 1988, XYZ REIT makes a dividend distribution of $2X. In the second quarter of 1988, XYZ sells real property, recognizing a long term capital gain of $15X, and makes a dividend distribution of $5X. In the third quarter of 1988, XYZ makes a distribution of $3X. In the fourth quarter of 1988, XYZ sells real property recognizing a long term capital loss of $2X. Within 30 days after the close of the taxable year, XYZ designates a capital gain dividend for the year of $13X. It subsequently makes a fourth quarter distribution of $7X. Since XYZ has made an actual designation of prior distributions during the taxable year as capital gain dividends, withholding on those prior distributions will not be required. However, the REIT must characterize, solely for purposes of section 1445(e)(1), a total amount of $13X of dividend distributions as capital gain dividends. Therefore, the fourth quarter dividend distribution of $7X must be characterized as a capital gain dividend subject to withholding under this section. In addition, XYZ will be required to characterize an additional $6X of subsequent dividend distributions as capital gain dividends.

(d) *Definition of nominee*. For purposes of this section, the term ''nominee'' means a domestic person that holds an interest in an entity described in paragraph (a) of this section on behalf of another domestic or foreign person.

(e) *Determination of non-foreign status by withholding agent*. A withholding agent may rely on a certificate of non-foreign status pursuant to §1.1445–2(b) or on the statements and address provided to it on Form W–9 or a form that is substantailly similar to such form, to determine whether an interest holder is a domestic person. Reliance on these documents will excuse the withholding agent from liability imposed under section 1445(e)(1) in the absence of actual knowledge that the interest holder is a foreign person. A withholding agent may also employ other means to determine the status of an interest holder, but, if the agent relies on such other means and the interest holder proves, in fact, to be a foreign person, then the withholding agent is subject to any liability imposed pursuant to section 1445 and the regulations thereunder for failure to withhold.

(f) *Qualified notice*. A qualified notice for purposes of paragraph (b)(3)(iv) of this section is a notice given by a partnership, trust or REIT regarding a distribution that is attributable to the disposition of a U.S. real property interest in accordance with the notice requirements with respect to dividends described in 17 CFR 240.10b–17(b) (1) or (3) issued pursuant to the Securities Exchange Act of 1934, 15 U.S.C. 78a *et seq*. In the case of a REIT, a qualified notice is only a notice of a distribution, all or any portion of which the REIT actually designates, or characterizes in accordance with paragraph (c)(2)(ii)(C) of this section, as a capital gain dividend in accordance with 17 CFR 240.10b–17(b) (1) or (3), with respect to each share or certificate of beneficial interest. A deemed designation under paragraph (c)(2)(ii)(A) of this section may not be the subject of a qualified notice under this paragraph (f). A person described in paragraph (b)(3) of this section shall be treated as receiving a qualified notice at the time such notice is published in accordance wtih 17 CFR 240.10b–17(b) (1) or (3).

(g) *Reporting and paying over withheld amounts*. With respect to an amount withheld under this section, a withholding agent is not required to conform to the requirements of §1.1445–5(b)(5) but is required to report and pay over to the Internal Revenue Service any amount required to be withheld pursuant to the rules and procedures of section 1461, the regulations thereunder and §1.6302–2. Forms 1042 and 1042S are to be used for this purpose.

(h) *Early refund procedure not available*. The early refund procedure set forth in §1.1445–6(g) shall not apply to amounts withheld under the rules of this section. For adjustment of overwithheld amounts, see §1.1461.4.

(i) *Liability upon failure to withhold*. For rules regarding liability upon failure to withhold under §1445(e) and this section, see §1.1445–1(e).

[T.D. 8321, 55 FR 50553, Dec. 7, 1990; 56 FR 4542, Feb. 5, 1991, as amended by T.D. 8647, 60 FR 66077, Dec. 21, 1995]

§ 1.1445–9T Special rule for section 1034 nonrecognition (temporary).

(a) *Purpose and scope.* This section provides a temporary regulation that, if and when adopted as a final regulation, will add a new paragraph (d)(2)(iii) to § 1.1445–2. Paragraph (b) of this section would then appear as paragraph (d)(2)(iii) of § 1.1445–2.

(b) No particular form is required for a transferor's notice to a transferee that the transferor is not required to recognize gain or loss with respect to a transfer. The notice must be verified as true and signed under penalties of perjury by a responsible officer in the case of a corporation, by a general partner in the case of a partnership, and by a trustee or equivalent fiduciary in the case of a trust or estate. The following information must be set forth in paragraphs labeled to correspond with the designation set forth below:

(1) A statement that the document submitted constitutes a notice of a nonrecognition transfer pursuant to the requirements of § 1.1445–2(d)(2);

(2) The name, identifying number (if any), and home address (in the case of an individual) or office address (in the case of an entity) of the transferor submitting the notice;

(3) A statement that the transferor is not required to recognize any gain or loss with respect to the transfer;

(4) A brief description of the transfer;

(5) A brief summary of the law and facts supporting the claim that recognition of gain or loss is not required with respect to the transfer; and

(6) If the transferor claims nonrecognition on the sale or exchange of a principal residence under section 1034(a) and another principal residence in the United States has not been purchased as of the date of sale of the principal residence, either (i) a copy of an executed binding contract for purchase by the transferor of a further principal residence in the United States with a purchase price exceeding the adjusted sales price of the old principal residence or (ii) an affidavit by the transferor signed under penalties of perjury stating that the transferor intends to complete purchase of another principal residence within the United States with a purchase price exceeding the adjusted sales price of the old principal residence by April 15 of the year following the taxable year of the sale of the principal residence, and that the transferor is expected to continue to be employed or stationed in the United States for a period of two years from the sale of the principal residence. If the transferor's adjusted sales price of the old principal residence exceeds the transferor's cost of purchasing another principal residence in the United States, withholding shall be required at the rate of ten percent on the portion of the gross amount realized on the sale or exchange of the principal residence equal to such excess.

(c) *Effective Date.* The rules of this section are effective with respect to sale of a principal residence after August 3, 1988.

[T.D. 8198, 53 FR 16230, May 5, 1988]

§ 1.1445–10T Special rule for Foreign governments (temporary).

(a) This section provides a temporary regulation that, if and when adopted as a final regulation will add a new paragraph (d)(6) to § 1.1445–2. Paragraph (b) of this section would then appear as paragraph (d)(6) of § 1.1445–2.

(b) *Foreign government*—(1) *As transferor.* A foreign government is subject to U.S. taxation under section 897 on the disposition of a U.S. real property interest except to the extent specifically otherwise provided in the regulations issued under section 892. A foreign government that disposes of a U.S. real property interest that is not subject to taxation as specifically provided by the regulations under section 892 may present a notice of nonrecognition treatment pursuant to paragraph (d)(2) of this section that specifically cites the provision of such regulation, and thereby avoids withholding by the transferee of the property. A foreign government that disposes of a U.S. real property interest or the transferee of the property may obtain a withholding certificate from the Internal Revenue Service that confirms the applicability of section 892, but neither is required to do so. Rules concerning the issuance of withholding certificates are provided in § 1.1445–3.

(2) *As transferee.* A foreign government or international organization

that acquires a U.S. real property interest is fully subject to section 1445 and the regulations thereunder. Therefore, such an entity is required to withhold tax upon the acquisition of a U.S. real property interest from a foreign person.

(c) *Effective date.* The rules of this section shall be effective for transfers, exchanges, distributions and other dispositions occuring on or after June 6, 1988.

[T.D. 8198, 53 FR 16230, May 5, 1988]

§ 1.1445–11T Special rules requiring withholding under § 1.1445–5 (temporary).

(a) *Purpose and scope.* This section provides temporary regulations that, if and when adopted as a final regulation will add certain new paragraphs within § 1.1445–5 (b) and (c). The paragraphs of this section would then appear as set forth below. Paragraph (b) of this section would then appear as paragraph (b)(8)(v) of § 1.1445–5. Paragraph (c) of this section would then appear as paragraph (c)(2)(i) of § 1.1445–5. Paragraph (d) of this section would then appear as paragraph (g) of § 1.1445–5.

(b) *Dispositions of interests in partnerships, trusts, and estates.* The provisions of section 1445(e)(5), requiring withholding upon certain dispositions of interests in partnerships, trusts, and estates, that own directly or indirectly a U.S. real property interest shall apply to dispositions on or after the effective date of a later Treasury decision under section 897(g) of the Code except in the case of dispositions of interests in partnerships in which fifty percent of the value of the gross assets consist of U.S. real property interests and ninety percent or more of the value of the gross assets consist of U.S. real property interests plus any cash or cash equivalents. The provisions of section 1445(e)(5), shall apply, however, to dispositions after June 6, 1988, of interests in partnerships in which fifty percent or more of the value of the gross assets consist of U.S. real property interests, and ninety percent or more of the value of the gross assets consist of U.S. real property interests plus any cash or cash equivalents. See paragraph (d) of this section.

(c) *Transactions covered elsewhere.* No withholding is required under this paragraph (c) with respect to the distribution of a U.S. real property interest by a partnership, trust, or estate. Such distributions shall be subject to withholding under section 1445(e)(4) and paragraph (f) of this § 1.1445–5 on the effective date of a later Treasury decision published under section 897(g) of the Code. No withholding is required at this time for distributions described in the preceding sentence. See paragraph (b)(8)(iv) of this § 1.1445–5. No withholding is required under this paragraph with respect to the disposition of an interest in a trust, estate, or partnership except in the case of a partnership in which fifty percent or more of the value of the gross assets consist of U.S. real property interests, and ninety percent or more of the value of the gross assets consist of U.S. real property interests plus any cash or cash equivalents. See paragraph (b)(8)(v) of § 1.1445–5. Withholding shall be required as provided in section 1445(e)(5) and paragraph (g) of this section with respect to the disposition after June 6, 1988, of an interest in a partnership in which fifty percent or more of the value of the gross assets consist of U.S. real property interests, and ninety percent or more of the value of the gross assets consist of U.S. real property interests plus any cash or cash equivalents.

(d) *Dispositions of interests in partnerships, trusts or estates*—(1) *Withholding required on disposition of certain partnership interests.* Withholding is required under section 1445(e)(5) and this paragraph with respect to the disposition by a foreign partner of an interest in a domestic or foreign partnership in which fifty percent or more of the value of the gross assets consist of U.S. real property interests, and ninety percent or more of the value of the gross assets consist of U.S. real property interests plus any cash or cash equivalents. For purposes of this paragraph cash equivalents mean any asset readily convertible into cash (whether or not denominated in U.S. dollars), including, but not limited to, bank accounts, certificates of deposit, money market accounts, commercial paper, U.S. and foreign treasury obligations

and bonds, corporate obligations and bonds, precious metals or commodities, and publicly traded instruments. The taxpayer on filing an income tax return for the year of the disposition may demonstrate the extent to which the gain on the disposition of the interest is not attributable to U.S. real property interests. A taxpayer is also permitted by §1.1445–3 to apply for a withholding certificate in instances where reduced withholding is approporiate.

(2) *Withholding not required*—(i) *Transferee receives statement that interest in partnership is not described in paragraph (d)(1).* No withholding is required under paragraph (d)(1) of this section upon the disposition of a partnership interest otherwise described in that paragraph if the transferee is provided a statement, issued by the partnership and signed by a general partner under penalties of perjury no earlier than 30 days before the transfer, certifying that fifty percent or more of the value of the gross assets does not consist of U.S. real property interests, or that ninety percent or more of the value of the gross assets of the partnership does not consist of U.S. real property interests plus cash or cash equivalents.

(ii) *Reliance on statement not permitted.* A transferee is not entitled to rely upon a statement described in paragraph (d)(2)(i) of this section if, prior to or at the time of the transfer, the transferee either—

(A) Has actual knowledge that the statement is false, or

(B) Receives a notice, pursuant to §1.1445–4.

Such a transferee's withholding obligations shall apply as if the statement had never been given, and such a transferee may be held fully liable pursuant to §1.1445–1(e) for any failure to withhold.

(iii) *Belated notice of false statement.* If, after the date of the transfer, a transferee receives notice that a statement provided under paragraph (d)(2)(i) of this section is false, then such transferee may rely on the statement only with respect to consideration that was paid prior to the receipt of the notice. Such a transferee is required to withhold a full 10 percent of the amount realized from the consideration that remains to be paid to the transferor. Thus, if 10 percent or more of the amount realized remains to be paid to the transferor, then the transferee is required to withhold and pay over the full 10 percent. The transferee must do so by withholding and paying over the entire amount of each successive payment of consideration to the transferor, until the full 10 percent of the amount realized has been withheld and paid over. Amounts so withheld must be reported and paid over by the 20th day following the date on which each such payment of consideration is made. A transferee that is subject to the rules of this §1.1445–10T(d)(2)(iii) may not obtain a withholding certificate pursuant to §1.1445–3, but must instead withhold and pay over the amounts required by this paragraph.

(e) *Effective date.* The rules of this section are effective for transactions after June 6, 1988.

[T.D. 8198, 53 FR 16231, May 5, 1988]

TAX–FREE COVENANT BONDS

§ 1.1451–1 Tax-free covenant bonds issued before January 1, 1934.

(a) *Rates of withholding*—(1) *Rate of 2 percent.* Withholding of a tax equal to 2 percent is required in the case of interest upon bonds or other corporate obligations containing a tax-free covenant and issued before January 1, 1934, paid to an individual, a fiduciary, or a partnership, whether resident or nonresident, or to a nonresident foreign corporation, regardless of whether the liability assumed by the obligor is less than, equal to, or greater than 2 percent.

(2) *Rate of 30 percent.* Notwithstanding subparagraph (1) of this paragraph, if the liability assumed by the obligor does not exceed 2 percent of the interest, withholding is required at the rate of 30 percent in the case of payments to a nonresident alien individual, a nonresident partnership composed in whole or in part of nonresident aliens, a nonresident foreign corporation, or an owner who is unknown to the withholding agent.

(3) *Obligations of resident payers.* The rates of withholding specified in subparagraphs (1) and (2) of this paragraph are applicable to interest on such tax-

free covenant bonds issued by a domestic corporation or by a resident foreign corporation.

(4) *Obligations of nonresident payers.* A nonresident foreign corporation having a fiscal or paying agent in the United States is required to withhold a tax of 2 percent in the case of interest upon its tax-free covenant bonds issued before January 1, 1934, which is paid to an individual or fiduciary who is a citizen or resident of the United States, to a partnership any member of which is a citizen or resident, or to an unknown owner.

(5) *Interest from sources without the United States.* Withholding is not required under section 1451 in the case of interest upon bonds or other corporate obligations issued before January 1, 1934, and containing a tax-free covenant if the interest is not to be treated as income from sources within the United States and the payments are made to a nonresident alien, a partnership composed wholly of nonresident aliens, or a nonresident foreign corporation.

(6) *Tax treaties.* The rates of tax to be withheld in accordance with this paragraph shall be reduced as may be provided by treaty with any country. See section 894 and § 1.1441–6 relating to income subject to a reduced rate of, or an exemption from, income tax pursuant to an income tax convention.

(b) *Date of issue.* The withholding provisions of section 1451 are applicable only to bonds, mortgages, or deeds of trust, or other similar obligations of a corporation which were issued before January 1, 1934, and which contain a tax-free covenant. For the purpose of section 1451, bonds, mortgages, or deeds of trust, or other similar obligations of a corporation, are issued when delivered. If a broker or other person acts as selling agent of the obligor, the obligation is issued when delivered by the agent to the purchaser. If a broker or other person purchases the obligation outright for the purpose of holding or reselling it, the obligation is issued when delivered to such broker or other person.

(c) *Extended maturity date.* In cases where on or after January 1, 1934, the maturity date of bonds or other obligations of a corporation is extended, the bonds or other obligations shall be considered to have been issued on or after January 1, 1934. The interest on such obligations is not subject to the withholding provisions of section 1451 but falls within the class of interest described in section 1441. See paragraph (c)(5)(iii) of § 1.1441–3.

(d) *Covenant in trust deed.* Bonds issued under a trust deed containing a tax-free covenant are treated as if they contain such a covenant. If neither the bonds nor the trust deeds given by the obligor to secure them contained a tax-free covenant, but the original trust deeds were modified before January 1, 1934, by supplemental agreements containing a tax-free covenant executed by the obligor corporation and the trustee, the bonds issued before January 1, 1934, are subject to the provisions of section 1451, provided appropriate authority existed for the modification of the trust deeds in this manner. The authority must have been contained in the original trust deeds or actually secured from the bondholders.

(e) *Notation showing date of issue.* In order that the date of issue of bonds, mortgages, deeds of trust, or other similar corporate obligations containing a tax-free covenant may be readily determined by the owner for the purpose of preparing the ownership certificates required by § 1.1461–1, the issuing or debtor corporation shall indicate the date of issue by an appropriate notation, or use the phrase ''issued on or after January 1, 1934,'' on each such obligation or in a statement accompanying the delivery of the obligation.

(f) *Effect of withholding on income taxes of bondholder and issuing corporation*—(1) *Federal tax.* In the case of corporate bonds or other corporate obligations issued before January 1, 1934, and containing a tax-free covenant, the corporation paying a Federal tax, or any part of it, for someone else pursuant to its agreement is not entitled to deduct such payment from its gross income on any ground; nor shall the tax so paid be included in the gross income of the bondholder. The amount of the tax so paid may, nevertheless, be claimed by the bondholder in accordance with paragraph (a) of § 1.1462–1 as

a credit against the total amount of income tax due. See also section 32. The tax so paid by the corporation upon tax-free covenant bond interest payable to a domestic or resident fiduciary and allocable to any nonresident alien beneficiary under section 652 or 662 is allowable, pro rata, as a credit against:

(i) The tax required to be withheld by the fiduciary in accordance with paragraph (f) of § 1.1441–3 from the income of the beneficiary, and

(ii) The total income tax computed in the return of the beneficiary, as indicated in paragraph (a) of § 1.1462–1.

(2) *State taxes.* In the case of corporate bonds or other obligations containing an appropriate tax-free covenant, the corporation paying for someone else, pursuant to its agreement, a State tax or any tax other than a Federal tax may deduct such payment as interest paid on indebtedness.

(g) *Alien resident of Puerto Rico.* For purposes of this section the term ''nonresident alien individual'' includes an alien resident of Puerto Rico.

(h) *Other rules for withholding of tax under section 1451.* The rules for withholding stated in paragraphs (c) (2) and (3), (f), and (g) of § 1.1441–3 shall also apply for purposes of withholding the tax under this section.

[T.D. 6500, 25 FR 12076, Nov. 26, 1960, as amended by T.D. 7157, 36 FR 25228, Dec. 30, 1971]

§ 1.1451–2 Exemptions from withholding under section 1451.

(a) *Claiming personal exemptions.* Withholding under § 1.1451–1 from interest on bonds or other obligations of corporations issued before January 1, 1934, and containing a tax-free covenant shall not be required if there is filed with the withholding agent when presenting coupons for payment, or not later than February 1 of the following year, an ownership certificate on Form 1000 stating:

(1) In the case of a citizen or resident of the United States, that his taxable income does not exceed his deductions for personal exemptions allowed under section 151; or

(2) In the case of an estate or trust the fiduciary of which is a citizen or resident of the United States, that its taxable income does not exceed the deduction for the personal exemption allowed under section 642(b).

(b) *Claiming residence in United States.* To claim residence in the United States for purposes of section 1451, see § 1.1441–5.

(c) *Other exemptions.* The exemptions allowed by paragraphs (d) and (h) of § 1.1441–4 shall also apply for purposes of section 1451.

[T.D. 6500, 25 FR 12077, Nov. 26, 1960, as amended by T.D. 6908, 31 FR 16774, Dec. 31, 1966]

APPLICATION OF WITHHOLDING PROVISIONS

§ 1.1461–1 Payment and returns of tax withheld.

(a) *Payment of withheld tax*—(1) *Deposits of tax.* Every withholding agent who withholds tax pursuant to chapter 3 of the Internal Revenue Code (Code) and the regulations under such chapter shall deposit such amount of tax with a Federal reserve bank or authorized financial institution as provided in § 1.6302–2(a). If for any reason the total amount of tax required to be returned for any calendar year pursuant to paragraph (b) of this section has not been deposited pursuant to § 1.6302–2, the withholding agent shall pay the balance of tax due for such year at such place as the Internal Revenue Service (IRS) shall specify. The tax shall be paid when filing the return required under paragraph (b)(1) of this section for such year, unless the IRS specifies otherwise.

(2) *Penalties for failure to pay tax.* For penalties and additions to the tax for failure to timely pay the tax required to be withheld under chapter 3 of the Code, see sections 6656, 6672, and 7202 and the regulations under those sections.

(b) *Income tax return*—(1) *General rule.* A withholding agent shall make an income tax return on Form 1042 (or such other form as the IRS may prescribe) for income paid during the preceding calendar year that the withholding agent is required to report on an information return on Form 1042–S (or such other form as the IRS may prescribe) under paragraph (c)(1) of this section. See section 6011 and § 1.6011–1(c). The

withholding agent must file the return on or before March 15 of the calendar year following the year in which the income was paid. The return must show the aggregate amount of income paid and tax withheld required to be reported on all the Forms 1042–S for the preceding calendar year by the withholding agent, in addition to such information as is required by the form and accompanying instructions. Withholding certificates or other statements or information provided to a withholding agent are not required to be attached to the return. A return must be filed under this paragraph (b)(1) even though no tax was required to be withheld during the preceding calendar year. The withholding agent must retain a copy of Form 1042 for the applicable statute of limitations on assessments and collection with respect to the amounts required to be reported on the Form 1042. See section 6501 and the regulations thereunder for the applicable statute of limitations. Adjustments to the total amount of tax withheld, as described in § 1.1461–2, shall be stated on the return as prescribed by the form and accompanying instructions.

(2) *Amended returns.* An amended return may be filed on a Form 1042 or such other form as the IRS may prescribe. An amended return must include such information as the form or accompanying instructions shall require, including, with respect to any information that has changed from the time of the filing of the return, the information that was shown on the original return and the corrected information.

(c) *Information returns*—(1) *Filing requirement*—(i) *In general.* A withholding agent (other than an individual who is not acting in the course of a trade or business with respect to a payment) must make an information return on Form 1042–S (or such other form as the IRS may prescribe) to report the amounts subject to reporting, as defined in paragraph (c)(2) of this section, that were paid during the preceding calendar year. Notwithstanding the preceding sentence, any person that withholds or is required to withhold an amount under sections 1441, 1442, or 1443 must file a Form 1042–S for the payment withheld upon whether or not that person is engaged in a trade or business and whether or not the payment is an amount subject to reporting. A Form 1042–S shall be prepared for each recipient of an amount subject to reporting. The Form 1042–S shall be prepared in such manner as the form and accompanying instructions prescribe. One copy of the Form 1042–S shall be filed with the IRS on or before March 15 of the calendar year following the year in which the amount subject to reporting was paid. It shall be filed with a transmittal form as provided in the instructions to the Form 1042–S and to the transmittal form. Withholding certificates, documentary evidence, or other statements or documentation provided to a withholding agent are not required to be attached to the form. Another copy of the Form 1042–S must be furnished to the recipient for whom the form is prepared (or any other person, as required under this paragraph (c) or the instructions to the form) on or before March 15 of the calendar year following the year in which the amount subject to reporting was paid. The withholding agent must retain a copy of each Form 1042–S for the statute of limitations on assessment and collection applicable to the Form 1042 to which the Form 1042–S relates.

(ii) *Recipient*—(A) *Defined.* For purposes of this section, the term *recipient* means—

(*1*) A beneficial owner as defined in § 1.1441–1(c)(6), including a foreign estate or a foreign complex trust, as defined in § 1.1441–1(c)(25);

(*2*) A qualified intermediary as defined in § 1.1441–1(e)(5)(ii);

(*3*) A withholding foreign partnership as defined in § 1.1441–5(c)(2) or a withholding foreign trust under § 1.1441–5(e)(5)(v);

(*4*) An authorized foreign agent as defined in § 1.1441–7(c);

(*5*) A U.S. branch that is treated as a U.S. person under § 1.1441–1(b)(2)(iv)(A);

(*6*) A nonwithholding foreign partnership or a foreign simple trust as defined in § 1.1441–1(c)(24), but only to the extent the income is (or is treated as) effectively connected with the conduct of a trade or business in the United States by such entity;

(*7*) A payee, as defined in § 1.1441–1(b)(2) that is presumed to be a foreign person under the presumption rules of § 1.1441–1(b)(3); 1.1441–5(d) or (e)(6), or 1.6049–5(d); and

(*8*) Any other person as required on Form 1042–S or the instructions to the form.

(B) *Persons that are not recipients.* A recipient does not include—

(*1*) A nonqualified intermediary;

(*2*) A payment to a wholly-owned entity that is disregarded under § 301.7701–2(c)(2) of this chapter as an entity separate from its owner;

(*3*) A flow-through entity, as defined in § 1.1441–1(c)(23) (to the extent it is receiving amounts subject to reporting other than income effectively connected with the conduct of a trade or business in the United States); and

(*4*) A U.S. branch described in § 1.1441–1(b)(2)(iv) that is not treated as a U.S. person under that section.

(2) *Amounts subject to reporting*—(i) *In general.* Subject to the exceptions described in paragraph (c)(2)(ii) of this section, amounts subject to reporting on Form 1042–S are amounts paid to a foreign payee (including persons presumed to be foreign) that are amounts subject to withholding as defined in § 1.1441–2(a). Amounts subject to reporting include amounts subject to withholding even if no amount is deducted and withheld from the payment because of a treaty or Internal Revenue Code exception to taxation or because an amount withheld was reimbursed to the payee under the adjustment procedures of § 1.1461–2. In addition, amounts subject to reporting include any amounts paid to a foreign payee on which a withholding agent withheld an amount (either under chapter 3 of the Internal Revenue Code or section 3406) whether or not the amount is subject to withholding. Amounts subject to reporting include, but are not limited to, the following items—

(A) The entire amount of a corporate distribution (whether actual or deemed) irrespective of any estimate of the portion of the distribution that represents a taxable dividend;

(B) Interest, including the portion of a notional principal contract payment that is characterized as interest. Interest shall also be reported on Form 1042-S if it is bank deposit interest paid to nonresident alien individuals as required under § 1.6049–8;

(C) Rents;

(D) Royalties;

(E) Compensation for dependent and independent personal services performed in the United States;

(F) Annuities;

(G) Pension distributions and other deferred income;

(H) Gambling winnings that are not exempt from tax under section 871(j);

(I) Income from the cancellation of indebtedness unless the withholding agent is unrelated to the debtor and does not have knowledge of the facts that give rise to the payment (see § 1.1441–2(d));

(J) Amounts that are (or are presumed to be) effectively connected with the conduct of a trade or business in the United States (including deposit interest as defined in sections 871(i)(2)(A) and 881(d)) even if no withholding certificate is required to be furnished by the payee or beneficial owner. In the case of amounts paid on a notional principal contract described in § 1.1441–4(a)(3) that are presumed to be effectively connected with the conduct of a trade or business in the United States, the amount required to be reported is limited to the amount of cash paid from the notional principal contract;

(K) Scholarship, fellowship, or grant income and compensation for personal services that is not excludible from gross income under section 117 (whether or not the taxable scholarship, fellowship, grant income, or compensation for personal services is exempt from tax under an income tax treaty) paid to foreign students, trainees, teachers, or researchers;

(L) Amounts paid to foreign governments, international organizations, or the Bank for International Settlements, whether or not documentation must be provided; and

(M) Original issue discount paid on the redemption of an OID obligation. The amount to be reported is the amount of OID includible in the gross income of the holder of the obligation, if known, or, if not known, the total

amount of original issue discount determined as if the holder held the obligation from its original issuance. A withholding agent may determine the total amount of OID by using the most recently published ''List of Original Issue Discount Instruments,'' (Publication 1212, available from the IRS Forms Distribution Centers).

(ii) *Exceptions to reporting*. The amounts listed in this paragraph (c)(2)(ii) are not required to be reported on Form 1042–S—

(A) Interest (including original issue discount) that is deposit interest under sections 871(i)(2)(A) and 881(d) and that is not effectively connected with the conduct of a trade or business in the United States, unless reporting is required under §1.6049–8 (regarding payments to certain foreign residents) or is interest that is effectively connected with the conduct of a trade or business in the United States;

(B) Interest or original issue discount on certain short-term obligations, described in section 871(g)(1)(B) or 881(a)(3);

(C) Interest paid on obligations sold between interest payment dates and the portion of the purchase price of an OID obligation that is sold or exchanged in a transaction other than a redemption, unless the sale or exchange is part of a plan, the principal purpose of which is to avoid tax and the withholding agent has actual knowledge or reason to know of such plan (see §1.1441–2(a)(5) and (6));

(D) Any item required to be reported on a Form W–2, including an item required to be shown on Form W–2 solely by reason of §1.6041–2 (relating to return of information for payments to employees) or §1.6052–1 (relating to information regarding payment of wages in the form of group-term life insurance);

(E) Any item required to be reported on Form 1099, and such other forms as are prescribed pursuant to the information reporting provisions of sections 6041 through 6050P and the regulations under those sections;

(F) Amounts paid on a notional principal contract described in §1.1441–4(a)(3)(i) that are not effectively connected with the conduct of a trade or business in the United States (or not treated as effectively connected pursuant to §1.1441–4(a)(3)(ii));

(G) Amounts required to be reported on Form 8288 (U.S. Withholding Tax Return for Dispositions by Foreign Persons of U.S. Real Property Interests) or Form 8804 (Annual Return for Partnership Withholding Tax (section 1446)). A withholding agent that must report a distribution partly on a Form 8288 or 8804 and partly on a Form 1042–S may elect to report the entire amount on a Form 8288 or 8804;

(H) Interest (including original issue discount) paid with respect to foreign-targeted registered obligations described in §1.871–14(e)(2) to the extent the documentation requirements described in §1.871–14(e)(3) and (4) are required to be satisfied (taking into account the provisions of §1.871–14(e)(4)(ii), if applicable;

(I) Interest on a foreign targeted bearer obligation (see §§1.1441–1(b)(4)(i) and 1.1441–2(a));

(J) Gain described in section 301(c)(3); and

(K) Amounts described in §1.1441–1(b)(4)(xviii) (dealing with certain amounts paid by the U.S. government).

(3) *Required information*. The information required to be furnished under this paragraph (c)(3) shall be based upon the information provided by or on behalf of the recipient of an amount subject to reporting (as corrected and supplemented based on the withholding agent's actual knowledge) or the presumption rules of §§1.1441–1(b)(3), 1.1441–4(a); 1.1441–5(d) and (e); 1.1441–9(b)(3) or 1.6049–5(d). The Form 1042–S must include the following information, if applicable—

(i) The name, address, and taxpayer identifying number of the withholding agent;

(ii) A description of each category of income paid based on the income codes provided on the form (e.g., interest, dividends, royalties, etc.) and the aggregate amount in each category expressed in U.S. dollars;

(iii) The rate of withholding applied or the basis for exempting the payment from withholding (based on exemption codes provided on the form);

(iv) The name and address of the recipient;

(v) The name and address of any nonqualified intermediary, flow-through entity, or U.S. branch as described in §1.1441–1(b)(2)(iv) (other than a branch that is treated as a U.S. person) to which the payment was made;

(vi) The taxpayer identifying number of the recipient if required under §1.1441–1(e)(4)(vii) or if actually known to the withholding agent making the return;

(vii) The taxpayer identifying number of a nonqualified intermediary or flow-through entity (to the extent it is not a recipient) or other flow-through entity to the extent it is known to the withholding agent;

(viii) The country (based on the country codes provided on the form) of the recipient and of any nonqualified intermediary or flow-through entity the name of which appears on the form; and

(ix) Such information as the form or the instructions may require in addition to, or in lieu of, information required under this paragraph (c)(3).

(4) *Method of reporting*—(i) *Payments by U.S. withholding agents to recipients.* A withholding agent that is a U.S. person (other than a foreign branch of a U.S. person that is a qualified intermediary as defined in §1.1441–1(e)(5)(ii)) and that makes payments of amounts subject to reporting on Form 1042–S must file a separate Form 1042–S for each recipient who receives such amount. For purposes of this paragraph (c)(4), a U.S. person includes a U.S. branch described in §1.1441–1(e)(2)(iv)(A) or (E) that agrees to be treated as a U.S. person. Except as may otherwise be required on Form 1042–S or the instructions to the form, only payments for which the income code, exemption code, withholding rate and recipient code are the same may be reported on a single Form 1042–S. See paragraph (c)(4)(ii) of this section for reporting of payments made to a person that is not a recipient.

(A) *Payments to beneficial owners.* If a U.S. withholding agent makes a payment directly to a beneficial owner it must complete Form 1042–S treating the beneficial owner as the recipient. Under the grace period rule of §1.1441–1(b)(3)(iv), a U.S. withholding agent may, under certain circumstances, treat a payee as a foreign person while the withholding agent awaits a valid withholding certificate. A U.S. withholding agent who relies on the grace period rule to treat a payee as a foreign person must file a Form 1042–S to report all payments on Form 1042–S during the period that person was presumed to be foreign even if that person is later determined to be a U.S. person based on appropriate documentation or is presumed to be a U.S. person after the grace period ends. In the case of joint owners, a withholding agent may provide a single Form 1042–S made out to the owner whose status the U.S. withholding agent relied upon to determine the applicable rate of withholding. If, however, any one of the owners requests its own Form 1042–S, the withholding agent must furnish a Form 1042–S to the person who requests it. If more than one Form 1042–S is issued for a single payment, the aggregate amount paid and tax withheld that is reported on all Forms 1042–S cannot exceed the total amounts paid to joint owners and the tax withheld thereon.

(B) *Payments to a qualified intermediary, a withholding foreign partnership, or a withholding foreign trust.* A U.S. withholding agent that makes payments to a qualified intermediary (whether or not the qualified intermediary assumes primary withholding responsibility), a withholding foreign partnership, or a withholding foreign trust shall complete Forms 1042–S treating the qualified intermediary or withholding foreign partnership as the recipient. The U.S. withholding agent must complete a separate Form 1042–S for each withholding rate pool. A withholding rate pool is a payment of a single type of income (determined by the income codes on Form 1042–S) that is subject to a single rate of withholding. A qualified intermediary that does not assume primary withholding responsibility on all payments it receives provides information regarding the proportions of income subject to a particular withholding rate to the withholding agent on a withholding statement associated with a qualified intermediary withholding certificate. A qualified intermediary may provide a

U.S. withholding agent with information regarding withholding rate pools for U.S. non-exempt recipients (as defined under §1.1441–1(c)(21)). Amounts paid with respect to such withholding rate pools must be reported on Form 1099 completed for each U.S. non-exempt recipient to the extent they are subject to Form 1099 reporting. These amounts must not be reported on Form 1042–S. In addition, the qualified intermediary may provide the U.S. withholding agent information regarding withholding rate pools for U.S. persons that are exempt recipients as defined under §1.1441–1(c)(20). If such information is provided, a U.S. withholding agent should not report such withholding rate pools on Form 1042–S.

(C) *Amounts paid to U.S. branches treated as U.S. persons.* A U.S. withholding agent making a payment to a U.S. branch of a foreign person described in §1.1441–1(b)(2)(iv) shall complete Form 1042–S as follows—

(*1*) If the branch has provided the U.S. withholding agent with a withholding certificate that evidences its agreement with the withholding agent to be treated as a U.S. person, the U.S. withholding agent files Forms 1042–S treating the U.S. branch as the recipient;

(*2*) If the branch has provided the U.S. withholding agent with a withholding certificate that transmits information regarding beneficial owners, qualified intermediaries, withholding foreign partnerships, or other recipients, the U.S. withholding agent must complete a separate Form 1042–S for each recipient whose documentation is associated with the U.S. branch's withholding certificate; or

(*3*) If the U.S. withholding agent cannot reliably associate a payment with a valid withholding certificate from the U.S. branch, it shall treat the U.S. branch as the recipient and report the income as effectively connected with the conduct of a trade or business in the United States.

(D) *Amounts paid to an authorized foreign agent.* If a U.S. withholding agent makes a payment to an authorized foreign agent, the withholding agent files Forms 1042–S treating the authorized foreign agent as the recipient, provided that the authorized foreign agent reports the payments on Forms 1042–S to each recipient to which it makes payments. If the authorized foreign agent fails to report the amounts paid on Forms 1042–S for each recipient to which the payment is made, the U.S. withholding agent remains responsible for such reporting.

(E) *Dual* Claims. A U.S. withholding agent may make a payment to a foreign entity that is simultaneously claiming a reduced rate of tax on its own behalf for a portion of the payment and a reduced rate on behalf of persons in their capacity as interest holders in that entity on the remaining portion. See §1.1441–6(b)(2)(iii). If the claims are consistent and the withholding agent accepts the multiple claims, the withholding agent must file a separate Form 1042–S for those payments for which the entity is treated as the beneficial owner and Forms 1042–S for each of the interest holder in the entity for which the interest holder is treated as the recipient. For those payments for which the interest holder in an entity is treated as the recipient, the U.S. withholding agent shall prepare the Form 1042–S in the same manner as a payment made to a nonqualified intermediary or flow-through entity as set forth in paragraph (c)(4)(ii) of this section. If the claims are consistent but the withholding agent has not chosen to accept the multiple claims, or if the claims are inconsistent, the withholding agent must file a separate Form 1042–S for the person or persons it has chosen to treat as the recipients.

(ii) *Payments made by U.S. withholding agents to persons that are not recipients*—(A) *Amounts paid to a nonqualified intermediary, a flow-through entity, and certain U.S. branches.* If a U.S. withholding agent makes a payment to a nonqualified intermediary, a flow-through entity, or a U.S. branch described in §1.1441–1(b)(2)(iv) (other than a branch that agrees to be treated as a U.S. person), it must complete a separate Form 1042–S for each recipient to the extent the withholding agent can reliably associate a payment with valid documentation (within the meaning of §1.1441–1(b)(2)(vii)) from the recipient which is associated with the withholding certificate provided by the

nonqualified intermediary, flow-through entity, or U.S. branch. If a payment is made through tiers of nonqualified intermediaries or flow-through entities, the withholding agent must nevertheless complete Form 1042–S for the recipients to the extent it can reliably associate the payment with documentation from the recipients. A withholding agent that is completing a Form 1042–S for a recipient that receives a payment through a nonqualified intermediary, a flow-through entity, or a U.S. branch must include on the Form 1042–S the name of the nonqualified intermediary or flow-through entity from which the recipient directly receives the payment. If a U.S. withholding agent cannot reliably associate the payment, or any portion of the payment, with valid documentation from a recipient either because no such documentation has been provided or because the nonqualified intermediary, flow-through entity, or U.S. branch has failed to provide sufficient allocation information so that the withholding agent can associate the payment, or any portion thereof, with valid documentation, then the withholding agent must report the payments as made to an unknown recipient in accordance with the appropriate presumption rules for that payment. Thus, if under the presumption rules the payment is presumed to be made to a foreign person, the withholding agent must generally withhold 30 percent of the payment and report the payment on Form 1042–S made out to an unknown recipient and shall also include the name of the nonqualified intermediary or flow-through entity that received the payment on behalf of the unknown recipient. If, however, the recipient is presumed to be a U.S. non-exempt recipient (as defined in §1.1441–1(c)(21)), the withholding agent must withhold on the payment as required under section 3406 and report the payment as made to an unknown recipient on the appropriate Form 1099 as required under chapter 61 of the Internal Revenue Code.

(B) *Disregarded entities.* If a U.S. withholding agent makes a payment to a disregarded entity but receives a valid withholding certificate or other documentary evidence from a foreign person that is the single owner of a disregarded entity, the withholding agent must file a Form 1042–S treating the foreign single owner as the recipient. The taxpayer identifying number on the Form 1042–S, if required, must be the foreign single owner's TIN.

(iii) *Reporting by qualified intermediaries, withholding foreign partnerships, and withholding foreign trusts.* A qualified intermediary, a withholding foreign partnership, and a withholding foreign trust shall report payments on Form 1042–S as provided in their agreements with the IRS and the instructions to the form.

(iv) *Reporting by a nonqualified intermediary, flow-through entity, and certain U.S. branches.* A nonqualified intermediary, flow-through entity, or U.S. branch described in §1.1441–1(e)(2)(iv) (other than a U.S. branch that is treated as a U.S. person) is a withholding agent and must file Forms 1042–S for amounts paid to recipients in the same manner as a U.S. withholding agent. A Form 1042–S will not be required, however, if another withholding agent has reported the same amount to the same recipient for which the nonqualified intermediary, flow-through entity, or U.S. branch would be required to file a return and the entire amount that should be withheld from such payment has been withheld. A nonqualified intermediary, flow-through entity, or U.S. branch must report payments made to recipients to the extent it has failed to provide the appropriate documentation to another withholding agent together with the information required for that withholding agent to reliably associate the payment with the recipient documentation or to the extent it knows, or has reason to know, that less than the required amount has been withheld. A nonqualified intermediary or flow-through entity that is required to report a payment on Form 1042–S must follow the same rules as apply to a U.S. withholding agent under paragraph (c)(4)(i) and (ii) of this section.

(v) *Pro rata reporting for allocation failures.* If a nonqualified intermediary, flow-through entity, or U.S. branch described in §1.1441–1(b)(2)(iv) (other than a branch treated as a U.S. person) that uses the alternative procedures of

§ 1.1441–1(e)(3)(iv)(D) fails to provide information sufficient to allocate the amount subject to reporting paid to a withholding rate pool to the payees identified for that pool, then the withholding agent shall report the payment in accordance with the rule provided in § 1.1441–1(e)(3)(iv)(D)(*6*).

(vi) *Other withholding agents*. Any person that is a withholding agent not described in paragraph (c)(4)(i), (iii), or (iv) of this section (e.g., a foreign person that is not a qualified intermediary, flow-through entity, or U.S. branch) shall file Form 1042–S in the same manner as a U.S. withholding agent and in accordance with the instructions to the form.

(5) *Magnetic media reporting*. A withholding agent that makes 250 or more Form 1042–S information returns for a taxable year must file Form 1042–S returns on magnetic media. See § 301.6011–2 of this chapter for requirements applicable to a withholding agent that files Forms 1042–S with the IRS on magnetic media and publications of the IRS relating to magnetic media filing.

(d) *Report of taxpayer identifying numbers*. When so required under procedures that the IRS may prescribe in published guidance (see § 601.601(d)(2) of this chapter), a withholding agent must attach to the Form 1042 a list of all the taxpayer identifying numbers (and corresponding names) that have been furnished to the withholding agent and upon which the withholding agent has relied to grant a reduced rate of withholding and that are not otherwise required to be reported on a Form 1042–S under the provisions of this section.

(e) *Indemnification of withholding agent*. A withholding agent is indemnified against the claims and demands of any person for the amount of any tax it deducts and withholds in accordance with the provisions of chapter 3 of the Code and the regulations under that chapter. A withholding agent that withholds based on a reasonable belief that such withholding is required under chapter 3 of the Code and the regulations under that chapter is treated for purposes of section 1461 and this paragraph (e) as having withheld tax in accordance with the provisions of chapter 3 of the Code and the regulations under that chapter. In addition, a withholding agent is indemnified against the claims and demands of any person for the amount of any payments made in accordance with the grace period provisions set forth in § 1.1441–1(b)(3)(iv). This paragraph (e) does not apply to relieve a withholding agent from tax liability under chapter 3 of the Code or the regulations under that chapter.

(f) *Amounts paid not constituting gross income*. Any amount withheld in accordance with § 1.1441–3 shall be reported and paid in accordance with this section, even though the amount paid to the beneficial owner may not constitute gross income in whole or in part. For this purpose, a reference in this section and § 1.1461–2 to an amount shall, where appropriate, be deemed to refer to the amount subject to withholding under § 1.1441–3.

(g) *Extensions of time to file Forms 1042 and 1042–S*. The IRS may grant an extension of time in which to file a Form 1042 or a Form 1042–S. Form 2758, Application for Extension of Time to File Certain Excise, Income, Information, and Other Returns (or such other form as the IRS may prescribe), must be used to request an extension of time for a Form 1042. Form 8809, Request for Extension of Time to File Information Returns (or such other form as the IRS may prescribe) must be used to request an extension of time for a Form 1042–S. The request must contain a statement of the reasons for requesting the extension and such other information as the forms or instructions may require. It must be mailed or delivered not later than March 15 of the year following the end of the calendar year for which the return will be filed.

(h) *Penalties*. For penalties and additions to the tax for failure to file returns or furnish statements in accordance with this section, see sections 6651, 6662, 6663, 6721, 6722, 6723, 6724(c), 7201, 7203, and the regulations under those sections.

(i) *Effective date*. This section shall apply to returns required for payments made after December 31, 2000.

[T.D. 8734, 62 FR 53467, Oct. 14, 1997, as amended by T.D. 8804, 63 FR 72188, Dec. 31, 1998; T.D. 8856, 64 FR 73412, Dec. 30, 1999; T.D. 8881, 65 FR 32201, 32212, May 22, 2000; 66 FR 18189, Apr. 6, 2001]

§ 1.1461–2 Adjustments for overwithholding or underwithholding of tax.

(a) *Adjustments of overwithheld tax*—(1) *In general*. A withholding agent that has overwithheld under chapter 3 of the Internal Revenue Code (Code) and made a deposit of the tax as provided in § 1.6302–2(a) may adjust the overwithheld amount either pursuant to the reimbursement procedure described in paragraph (a)(2) of this section or pursuant to the set-off procedure described in paragraph (a)(3) of this section. Adjustments under this paragraph (a) may only be made within the time prescribed under paragraph (a) (2) or (3) of this section. After such time, a refund of the amount overwithheld can only be claimed by the beneficial owner with the Internal Revenue Service (IRS) pursuant to the procedures described in chapter 65 of the Code. For purposes of this section, the term overwithholding means any amount actually withheld (determined before application of the adjustment procedures under this section) from an item of income pursuant to chapter 3 of the Code or the regulations thereunder in excess of the actual tax liability due, regardless of whether such overwithholding was in error or appeared correct at the time it occurred.

(2) *Reimbursement of tax*—(i) *General rule*. Under the reimbursement procedure, the withholding agent repays the beneficial owner or payee for the amount overwithheld. In such a case, the withholding agent may reimburse itself by reducing, by the amount of tax actually repaid to the beneficial owner or payee, the amount of any deposit of tax made by the withholding agent under § 1.6302–2(a)(1)(iii) for any subsequent payment period occurring before the end of the calendar year following the calendar year of overwithholding. Any such reduction that occurs for a payment period in the calendar year following the calendar year of overwithholding shall be allowed only if—

(A) The withholding agent states, on a timely filed (not including extensions) Form 1042–S for the calendar year of overwithholding, the amount of tax withheld and the amount of any actual repayment; and

(B) The withholding agent states on a timely filed (not including extensions) Form 1042 for the calendar year of overwithholding, that the filing of the Form 1042 constitutes a claim for credit in accordance with § 1.6414–1.

(ii) *Record maintenance*. If the beneficial owner is repaid an amount of withholding tax under the provisions of this paragraph (a)(2), the withholding agent shall keep as part of its records a receipt showing the date and amount of repayment and the withholding agent must provide a copy of such receipt to the beneficial owner. For this purpose, a canceled check or an entry in a statement is sufficient provided that the check or statement contains a specific notation that it is a refund of tax overwithheld.

(3) *Set-offs*. Under the set-off procedure, the withholding agent may repay the beneficial owner or payee by applying the amount overwithheld against any amount which otherwise would be required under chapter 3 of the Code or the regulations thereunder to be withheld from income paid by the withholding agent to such person before the earlier of the due date (without regard to extensions) for filing the Form 1042–S for the calendar year of overwithholding or the date that the Form 1042–S is actually filed with the IRS. For purposes of making a return on Form 1042 or 1042–S (or an amended form) for the calendar year of overwithholding and for purposes of making a deposit of the amount withheld, the reduced amount shall be considered the amount required to be withheld from such income under chapter 3 of the Code and the regulations thereunder.

(4) *Examples*. The principles of this paragraph (a) are illustrated by the following examples:

Example 1. (i) N is a nonresident alien individual who is a resident of the United Kingdom. In December 2001, a domestic corporation C pays a dividend of $100 to N, at which time C withholds $30 and remits the balance

of $70 to N. On February 10, 2002, prior to the time that C files its Form 1042, N furnishes a valid Form W–8 described in §1.1441–1(e)(2)(i) upon which C may rely to reduce the rate of withholding to 15 percent under the provisions of the U.S.–U.K. tax treaty. Consequently, N advises C that its tax liability is only $15 and not $30 and requests reimbursement of $15. Although C has already deposited the $30 that was withheld, as required by §1.6302–2(a)(1)(iv), C repays N in the amount of $15.

(ii) During 2001, C makes no other payments upon which tax is required to be withheld under chapter 3 of the Code; accordingly, its return on Form 1042 for such year, which is filed on March 15, 2002, shows total tax withheld of $30, an adjusted total tax withheld of $15, and $30 previously paid for such year. Pursuant to §1.6414–1(b), C claims a credit for the overpayment of $15 shown on the Form 1042 for 2001. Accordingly, it is permitted to reduce by $15 any deposit required by §1.6302–2 to be made of tax withheld during the calendar year 2002. The Form 1042–S required to be filed by C with respect to the dividend of $100 paid to N in 2001 is required to show tax withheld of $30 and tax released of $15.

Example 2. The facts are the same as in *Example 1*. In addition, during 2002, C makes payments to N upon which it is required to withhold $200 under chapter 3 of the Code, all of which is withheld in June 2002. Pursuant to §1.6302–2(a)(1)(iii), C deposits the amount of $185 on July 15, 2002 ($200 less the $15 for which credit is claimed on the Form 1042 for 2001). On March 15, 2003, C Corporation files its return on Form 1042 for calendar year 2002, which shows total tax withheld of $200, $185 previously deposited by C, and $15 allowable credit.

Example 3. The facts are the same as in *Example 1*. Under §1.6032–2(a)(1)(ii)), C is required to deposit on a quarter-monthly basis the tax withheld under chapter 3 of the Code. C withholds tax of $100 between February 8 and February 15, 2002, and deposits $75 [($100 x 90 percent) less $15] of the withheld tax within 3 banking days after February 15, 2002, and by depositing $10 [($100 − $15) less $75] within 3 banking days after March 15, 2002.

(b) *Withholding of additional tax when underwithholding occurs*. A withholding agent may withhold from future payments made to a beneficial owner the tax that should have been withheld from previous payments to such beneficial owner. In the alternative, the withholding agent may satisfy the tax from property that it holds in custody for the beneficial owner or property over which it has control. Such additional withholding or satisfaction of the tax owed may only be made before the date that the Form 1042 is required to be filed (not including extensions) for the calendar year in which the underwithholding occurred. See §1.6302–2 for making deposits of tax or §1.1461–1(a) for making payment of the balance due for a calendar year.

(c) *Definition*. For purposes of this section, the term *payment period* means the period for which the withholding agent is required by §1.6302–2(a)(1) to make a deposit of tax withheld under chapter 3 of the Code.

(d) *Effective date*. This section applies to payments made after December 31, 2000.

[T.D. 8734, 62 FR 53470, Oct. 14, 1997, as amended by T.D. 8804, 63 FR 72188, Dec. 31, 1998; T.D. 8856, 64 FR 73412, Dec. 30, 1999]

§1.1462–1 Withheld tax as credit to recipient of income.

(a) *Creditable tax*. The entire amount of the income from which the tax is required to be withheld (including amounts calculated under the gross-up formula in §1.1441–3(f)(1)) shall be included in gross income in the return required to be made by the beneficial owner of the income, without deduction for the amount required to be or actually withheld, but the amount of tax actually withheld shall be allowed as a credit against the total income tax computed in the beneficial owner's return.

(b) *Amounts paid to persons who are not the beneficial owner*. Amounts withheld at source under chapter 3 of the Internal Revenue Code (Code) on payments to a fiduciary, partnership, or intermediary is deemed to have been paid by the taxpayer ultimately liable for the tax upon such income. Thus, for example, if a beneficiary of a trust is subject to the taxes imposed by section 1, 2, 3, or 11 upon any portion of the income received from a foreign trust, the part of any amount withheld at source which is properly allocable to the income so taxed to such beneficiary shall be credited against the amount of the income tax computed upon the beneficiary's return, and any excess shall be refunded. Further, if a partnership withholds an amount under chapter 3 of the Code with respect to the distributive share of a partner that is a

partnership or with respect to the distributive share of partners in an upper tier partnership, such amount is deemed to have been withheld by the upper tier partnership.

(c) *Effective date*. This section applies to payments made after December 31, 2000.

[T.D. 8734, 62 FR 53471, Oct. 14, 1997, as amended by T.D. 8804, 63 FR 72188, Dec. 31, 1998]

§ 1.1463–1 Tax paid by recipient of income.

(a) *Tax paid*. If the tax required to be withheld under chapter 3 of the Internal Revenue Code is paid by the beneficial owner of the income or by the withholding agent, it shall not be recollected from the other, regardless of the original liability therefor. However, this section does not relieve the person that did not withhold tax from liability for interest or any penalties or additions to tax otherwise applicable. See § 1.1441–7(b) for additional applicable rules.

(b) *Effective date*. This section applies to failures to withhold occurring after December 31, 2000.

[T.D. 8734, 62 FR 53471, Oct. 14, 1997, as amended by T.D. 8804, 63 FR 72188, Dec. 31, 1998; T.D. 8856, 64 FR 73412, Dec. 30, 1999]

§ 1.1464–1 Refunds or credits.

(a) *In general*. The refund or credit under chapter 65 of the Code of an overpayment of tax which has actually been withheld at the source under chapter 3 of the Code shall be made to the taxpayer from whose income the amount of such tax was in fact withheld. To the extent that the overpayment under chapter 3 was not in fact withheld at the source, but was paid, by the withholding agent the refund or credit under chapter 65 of the overpayment shall be made to the withholding agent. Thus, where a debtor corporation assumes liability pursuant to its tax-free covenant for the tax required to be withheld under chapter 3 upon interest and pays the tax in behalf of its bondholder, and it can be shown that the bondholder is not in fact liable for any tax, the overpayment of tax shall be credited or refunded to the withholding agent in accordance with chapter 65 since the tax was not actually deducted and withheld from the interest paid to the bondholder. In further illustration, where a withholding agent who is required by chapter 3 to withhold $300 tax from rents paid to a nonresident alien individual mistakenly withholds $320 and mistakenly pays $350 as internal revenue tax, the amount of $30 shall be credited or refunded to the withholding agent in accordance with chapter 65 and the amount of $20 shall be credited or refunded in accordance with such chapter to the person from whose income such amount has been withheld.

(b) *Tax repaid to payee*. For purposes of this section and § 1.6414–1, any amount of tax withheld under chapter 3 of the Code, which, pursuant to paragraph (a)(1) of § 1.1461–2, is repaid by the withholding agent to the person from whose income such amount was erroneously withheld shall be considered as tax which, within the meaning of sections 1464 and 6414, was not actually withheld by the withholding agent.

[T.D. 6922, 32 FR 8713, June 17, 1967, as amended by T.D. 8804, 63 FR 72188, Dec. 31, 1998]

Rules Applicable to Recovery of Excessive Profits on Government Contracts

RECOVERY OF EXCESSIVE PROFITS ON GOVERNMENT CONTRACTS

§ 1.1471–1 Recovery of excessive profits on government contracts.

The inclusion of the statutory provisions of section 1471 in this part does not supersede the provisions of 26 CFR (1939) part 17 (Treasury Decision 4906) and 26 CFR (1939) part 16 (Treasury Decision 4909) as made applicable to section 1471 by Treasury Decision 6091 (19 FR 5167, C.B. 1954–2, 47).

[T.D. 6500, 25 FR 12081, Nov. 26, 1960]

EDITORIAL NOTE: For the convenience of the user, the text of parts 16 and 17 (not entirely superseded) of 26 CFR (1939) referred to above is set forth below:

PART 16—EXCESS PROFITS ON ARMY CONTRACTS FOR AIRCRAFT

REGULATIONS UNDER SECTION 14 OF THE ACT OF APRIL 3, 1939, AND OTHER PROVISIONS

AUTHORITY: Sections 16.1 to 16.18 issued under 52 Stat. 467; 26 U.S.C. 3791. Interpret or apply sec. 3, 48 Stat. 505, as amended, sec. 14, 53 Stat. 560; 34 U.S.C. 496, 10 U.S.C. 311, 312.2206

SOURCE: Sections 16.1 to 16.18 contained in T.D. 4909, 4 FR 2733, July 1, 1939, except as otherwise noted.

§ 16.1 *Definitions*. As used in the regulations in this part the term:

(a) ''Act'' means the act of April 3, 1939 (53 Stat. 560; 10 U.S.C. 311, 312, 34 U.S.C. 496), together with the applicable provisions of section 3 of the act of March 27, 1934, 48 Stat. 505; 34 U.S.C. 496, as amended by the act of June 25, 1936, 49 Stat. 1926; 34 U.S.C., Sup. IV, 496, and as further amended by the act of April 3, 1939 (53 Stat. 560; 34 U.S.C. 496).

(b) ''Person'' includes an individual, a corporation, a partnership, a trust or estate, a joint-stock company, an association, or a syndicate, group, pool, joint venture or other unincorporated organization or group, through or by means of which any business, financial operation or venture is carried on.

(c) ''Contract'' means an agreement made by authority of the Secretary of the Army for the construction or manufacture of any complete aircraft or any portion thereof for the Army.

(d) ''Contractor'' means a person entering into a direct contract with the Secretary of the Army or his duly authorized representative.

(e) ''Subcontract'' means an agreement entered into by one person with another person for the construction or manufacture of any complete aircraft or any portion thereof for the Army, the prime contract for such aircraft or portion thereof having been entered into between a contractor and the Secretary of the Army or his duly authorized representative.

(f) ''Subcontractor'' means any person other than a contractor entering into a subcontract.

(g) ''Contracting party'' means a contractor or subcontractor as the case may be.

(h) ''Contract price'' or ''total contract price'' means the amount or total amount to be received under a contract or subcontract as the case may be.

(i) ''Income-taxable year'' means the calendar year, the fiscal year ending during such calendar year, or the fractional part of such calendar or fiscal year, upon the basis of which the contracting party's net income is computed and for which its income tax returns are made for Federal income tax purposes.

§ 16.2 *Contracts and subcontracts under which excess profit liability may be incurred*. Except as otherwise provided with respect to contracts or subcontracts for certain scientific equipment (see § 16.3), every contract awarded for an amount exceeding $10,000 and entered into after the enactment of the act of April 3, 1939 for the construction or manufacture of any complete aircraft or any portion thereof for the Army, is subject to the provisions of the act relating to excess profit liability. Any subcontract made with respect to such a contract and involving an amount in excess of $10,000 is also within the scope of the act. If a contracting party places orders with another party, aggregating an amount in excess of $10,000, for articles or materials which constitute a part of the cost of performing the contract or subcontract, the placing of such orders shall constitute a subcontract within the scope of the act, unless it is clearly shown that each of the orders involving $10,000 or less is a bona fide separate and distinct subcontract and not a subdivision made for the purpose of evading the provisions of the act.

§ 16.3 *Contracts or subcontracts for scientific equipment*. No excess profit liability is incurred upon a contract or subcontract entered into after the enactment of the act of April 3, 1939, if at the time or prior to the time such contract or subcontract is made it is designated by the Secretary of the Army as being exempt under the provisions of the act pertaining to scientific equipment used for communication, target detection, navigation, and fire control.

§ 16.4 *Completion of contract defined*. The date of delivery of the aircraft or portion thereof covered by the contract or subcontract shall be considered the date of completion of the contract or subcontract unless otherwise determined jointly by the Secretary of the Army and the Secretary of the Treasury or their duly authorized representatives. Except as otherwise provided in the preceding sentence, the replacement of defective parts or delivered articles or the performance of other guarantee work in respect of such articles will not operate to extend the date of completion. As to the treatment of the cost of such work as a cost of performing a contract or subcontract, see § 16.8(h). As to a refund in case of adjustment due to any subsequently incurred additional costs, see § 16.18. If a contract or subcontract is at any time cancelled or terminated, it is completed at the time of the cancellation or termination.

§ 16.5 *Manner of determining liability*. (a) The first step in the determination of the excess profit to be paid to the United States by a contracting party with respect to contracts and subcontracts completed within an income-taxable year is to ascertain the total

contract prices of all contracts and subcontracts completed by the contracting party within the income-taxable year. As to total contract prices, see §16.7.

(b) The second step is to ascertain the cost of performing such contracts and subcontracts and to deduct such cost from the total contract prices of such contracts and subcontracts as computed in the first step. See §16.8. The amount remaining after such subtraction is the amount of net profit or net loss upon the contracts and subcontracts completed within the income-taxable year.

(c) The third step, in case there is a net profit upon such contracts and subcontracts, is to subtract from the amount of such net profit as computed in the second step the sum of:

(1) An amount equal to 12 percent of the total contract prices of the contracts and subcontracts completed within the income-taxable year;

(2) The amount of any net loss allowable as a credit in determining the excess profit for the income-taxable year (see §16.9); and

(3) The amount of any deficiency in profit allowable as a credit in determining the excess profit for the income-taxable year (see §16.9). The amount remaining after such subtraction is the amount of excess profit for the income-taxable year.

(d) The fourth step is to ascertain the amount of credit allowed for Federal income taxes paid or remaining to be paid upon the amount of such excess profit (see §16.10) and then subtract from the amount of such excess profit the amount of credit for Federal income taxes. The amount remaining after this subtraction is the amount of excess profit to be paid to the United States by the contracting party for the income-taxable year.

[T.D. 4909, 4 FR 2733, July 1, 1939, as amended by T.D. 6511, 25 FR 12442, Dec. 6, 1960]

§16.6 *Computation of excess profit liability.* The application of the provisions of §16.5 may be illustrated by the following example:

Example. On September 1, 1939, the B Corporation, which keeps its books and makes its Federal income tax returns on a calendar year basis, entered into a contract for the construction of Army aircraft coming within the scope of the act, the total contract price of which was $200,000. On March 10, 1940, the corporation entered into another such contract, the total contract price of which was $40,000. Both contracts were completed within the calendar year 1940, the first at a cost of $155,000 and the second at a cost of $45,000. During the year 1940, the B Corporation also completed at a deficiency in profit of $2,000 a contract entered into after April 3, 1939, for the construction of naval aircraft coming within the scope of 10 U.S.C. 2382 (formerly section 3 of the Act of March 27, 1934 (48 Stat. 505)). For the year 1939, the B Corporation sustained a net loss of $1,500 and a deficiency in profit of $1,000 on all contracts and subcontracts entered into after April 3, 1939, for Army aircraft coming within the scope of the act and completed within the calendar year 1939. For the year 1939, the B Corporation also sustained a net loss of $1,000 on a contract, entered into after April 3, 1939, and completed within the calendar year 1939, for naval aircraft coming within the scope of 10 U.S.C. 2382 (formerly section 3 of the Act of March 27, 1934 (48 Stat. 505)). For purposes of the Federal income tax, the net income of the B Corporation for the year 1940, on which the tax was paid, amounted to $96,000, which included the total net profit of $40,000 upon the two contracts entered into on September 1, 1939, and March 10, 1940. The excess profit liability is $4,332, computed as follows:

Total contract prices:		
Contract No. 1	$200,000	
Contract No. 2	40,000	
		$240,000
Less: Cost of performing contracts:		
Contract No. 1	155,000	
Contract No. 2	45,000	
		$200,000
Net profit on contracts		$40,000
Less:		
12 percent of total contract prices (12 percent of $240,000)	$28,800	
Deficiency in profit (in naval aircraft contracts) in 1940	2,000	
Net loss (in Army aircraft contracts) from 1939	1,500	
Net loss (in naval aircraft contracts) from 1939	1,000	
Deficiency in profit (in Army aircraft contracts) from 1939	1,000	.....
Excess profit for year 1940		5,700
Less: Credit for Federal income taxes (Federal income tax on $5,700 at rates for 1940)		1,368
		34,300
Amount of excess profit payable to the United States		4,332

[T.D. 4909, 4 FR 2733, July 1, 1939, as amended by T.D. 6511, 25 FR 12442, Dec. 6, 1960]

§16.7 *Total contract price.* The total contract price of a particular contract or subcontract (see §16.1) may be received in money or its equivalent. If something other than money is received, only the fair market value of the thing received, at the date of receipt, is to be included in determining the amount received. Bonuses earned for bettering performance and penalties incurred for failure to meet the contract guarantees are to be regarded as adjustments of the original contract price. Trade or other discounts granted by a contracting party in respect of a contract or subcontract performed by such party are also to be deducted

in determining the true total contract price of such contract or subcontract.

§16.8 *Cost of performing a contract or subcontract.*—(a) *General rule.* The cost of performing a particular contract or subcontract shall be the sum of (1) the direct costs, including therein expenditures for materials, direct labor and direct expenses, incurred by the contracting party in performing the contract or subcontract; and (2) the proper proportion of any indirect costs (including therein a reasonable proportion of management expenses) incident to and necessary for the performance of the contract or subcontract.

(b) *Elements of cost.* No definitions of the elements of cost may be stated which are of invariable application to all contractors and subcontractors. In general, the elements of cost may be defined for purposes of the act as follows:

(1) Manufacturing cost, which is the sum of factory cost (see paragraph (c) of this section) and other manufacturing cost (see paragraph (d) of this section);

(2) Miscellaneous direct expenses (see paragraph (e) of this section);

(3) General expenses, which are the sum of indirect engineering expenses, usually termed ''engineering overhead'' (see paragraph (f) of this section) and expenses of distribution, servicing and administration (see paragraph (g) of this section); and

(4) Guarantee expenses (see paragraph (h) of this section).

(c) *Factory cost.* Factory cost is the sum of the following:

(1) *Direct materials.* Materials, such as those purchased for stock and subsequently issued for contract operations and those acquired under subcontracts, which become a component part of the finished product or which are used directly in fabricating, converting or processing such materials or parts.

(2) *Direct productive labor.* Productive labor, usually termed ''shop labor,'' which is performed on and is properly chargeable directly to the article manufactured or constructed pursuant to the contract or subcontract, but which ordinarily does not include direct engineering labor (see subparagraph (3) of this paragraph).

(3) *Direct engineering labor.* The compensation of professional engineers and other technicists (including reasonable advisory fees), and of draftsmen, properly chargeable directly to the cost of the contract or subcontract.

(4) *Miscellaneous direct factory charges.* Items which are properly chargeable directly to the factory cost of performing the contract or subcontract but which do not come within the classifications in subparagraphs (1), (2), and (3) of this paragraph, as for example, royalties which the contracting party pays to another party and which are properly chargeable to the cost of performing the contract or subcontract (but see paragraph (d) of this section).

(5) *Indirect factory expenses.* Items, usually termed ''factory overhead,'' which are not directly chargeable to the factory cost of performing the contract or subcontract but which are properly incident to and necessary for the performance of the contract or subcontract and consist of the following:

(i) *Labor.* Amounts expended for factory labor, such as supervision and inspection, clerical labor, timekeeping, packing and shipping, stores supply, services of tool crib attendants, and services in the factory employment bureau, which are not chargeable directly to productive labor of the contract or subcontract.

(ii) *Materials and supplies.* The cost of materials and supplies for general use in the factory in current operations, such as shop fuel, lubricants, heat-treating, plating, cleaning and anodizing supplies, nondurable tools and gauges, stationery (such as time tickets and other forms), and boxing and wrapping materials.

(iii) *Service expenses.* Factory expenses of a general nature, such as those for power, heat and light (whether purchased or produced), ventilation and air-conditioning and operation and maintenance of general plant assets and facilities.

(iv) *Fixed charges and obsolescence.* Recurring charges with respect to property used for manufacturing purposes of the contract or subcontract, such as premiums for fire and elevator insurance, property taxes, rentals and allowances for depreciation of such property, including maintenance and depreciation of reasonable stand-by equipment; and depreciation and obsolescence of special equipment and facilities necessarily acquired primarily for the performance of the contract or subcontract. In making allowances for depreciation, consideration shall be given to the number and length of shifts.

(v) *Miscellaneous indirect factory expenses.* Miscellaneous factory expenses not directly chargeable to the factory cost of performing the contract or subcontract, such as purchasing expenses; ordinary and necessary expenses of rearranging facilities within a department or plant; employees' welfare expenses; premiums or dues on compensation insurance; employers' payments to unemployment, old age and social security Federal and State funds not including payments deducted from or chargeable to employees or officers; pensions and retirement payments to factory employees; factory accident compensation (as to self-insurance, see paragraph (g) of this section); but not including any amounts which are not incident to services, operations, plant, equipment or facilities involved in the performance of the contract or subcontract.

(d) *Other manufacturing cost.* Other manufacturing cost as used in paragraph (b) of

this section includes items of manufacturing costs which are not properly or satisfactorily chargeable to factory costs (see paragraph (c) of this section) but which upon a complete showing of all pertinent facts are properly to be included as a cost of performing the contract or subcontract, as for instance, payments of royalties and amortization of the cost of designs purchased and patent rights over their useful life; and ''deferred'' or ''unliquidated'' experimental and development charges. For example, in case experimental and development costs have been properly deferred or capitalized and are amortized in accordance with a reasonably consistent plan, a proper portion of the current charge, determined by a ratable allocation which is reasonable in consideration of the pertinent facts, may be treated as a cost of performing the contract or subcontract. In the case of general experimental and development expenses which may be charged off currently, a reasonable portion thereof may be allocated to the cost of performing the contract or subcontract. If a special experimental or development project is carried on in pursuance of a contract, or in anticipation of a contract which is later entered into, and the expense is not treated as a part of general experimental and development expenses or is not otherwise allowed as a cost of performing the contract, there clearly appearing no reasonable prospect of an additional contract for the type of article involved, the entire cost of such project may be allowed as a part of the cost of performing the contract.

(e) *Miscellaneous direct expenses.* Miscellaneous direct expenses as used in paragraph (b) of this section include:

(1) *Cost of installation and construction.* Cost of installation and construction includes the cost of materials, labor and expenses necessary for the erection and installation prior to the completion of the contract and after the delivery of the product or material manufactured or constructed pursuant to the contract or subcontract.

(2) *Sundry direct expenses.* Items of expense which are properly chargeable directly to the cost of performing a contract or subcontract and which do not constitute guarantee expenses (see paragraph (h) of this section) or direct costs classified as factory cost or other manufacturing cost (see paragraphs (c) and (d) of this section), such as premiums on performance or other bonds required under the contract or subcontract; State sales taxes imposed on the contracting party; freight on outgoing shipments; fees paid for wind tunnel and model basin tests; demonstration and test expenses; crash insurance premiums; traveling expenses. In order for any such item to be allowed as a charge directly to the cost of performing a contract or subcontract, (i) a detailed record shall be kept by the contracting party of all items of a similar character, and (ii) no item of a similar character which is properly a direct charge to other work shall be allowed as a part of any indirect expenses in determining the proper proportion thereof chargeable to the cost of performing the contract or subcontract. As to allowable indirect expenses, see paragraphs (c)(5), (f), (g) and (j) of this section.

(f) *Indirect engineering expenses.* Indirect engineering expenses, usually termed ''engineering overhead,'' which are treated in this section as a part of general expenses in determining the cost of performing a contract or subcontract (see paragraph (b) of this section), comprise the general engineering expenses which are incident to and necessary for the performance of the contract or subcontract, such as the following:

(1) *Labor.* Reasonable fees of engineers employed in a general consulting capacity, and compensation of employees for personal services to the engineering department, such as supervision, which is properly chargeable to the contract or subcontract, but which is not chargeable as direct engineering labor (see paragraph (c)(3) of this section).

(2) *Material.* Supplies for the engineering department, such as paper and ink for drafting and similar supplies.

(3) *Miscellaneous expenses.* Expenses of the engineering department, such as (i) maintenance and repair of engineering equipment, and (ii) services purchased outside of the engineering department for blue printing, drawing, computing, and like purposes.

(g) *Expenses of distribution, servicing and administration.* Expenses of distribution, servicing and administration, which are treated in this section as a part of general expenses in determining the cost of performing a contract or subcontract (see paragraph (b) of this section), comprehend the expenses incident to and necessary for the performance of the contract or subcontract, which are incurred in connection with the distribution and general servicing of the contracting party's products and the general administration of the business, such as:

(1) *Compensation for personal services of employees.* The salaries of the corporate and general executive officers and the salaries and wages of administrative clerical employees and of the office services employees such as telephone operators, janitors, cleaners, watchmen and office equipment repairmen.

(2) *Bidding and general selling expenses.* Bidding and general selling expenses which by reference to all the pertinent facts and circumstances reasonably constitute a part of the cost of performing a contract or subcontract. The treatment of bidding and general selling expenses as a part of general expenses in accordance with this paragraph is in lieu of any direct charges which otherwise might be made for such expenses. The term

''bidding expenses'' as used in this section includes all expenses in connection with preparing and submitting bids.

(3) *General servicing expenses.* Expenses which by reference to all the pertinent facts and circumstances reasonably constitute a part of the cost of performing a contract or subcontract and which are incident to delivered or installed articles and are due to ordinary adjustments or minor defects; but including no items which are treated as a part of guarantee expenses (see paragraph (h) of this section) or as a part of direct costs, such as direct materials, direct labor, and other direct expense.

(4) *Other expenses.* Miscellaneous office and administrative expenses, such as stationery and office supplies; postage; repair and depreciation of office equipment; contributions to local charitable or community organizations to the extent constituting ordinary and necessary business expenses; employees' welfare expenses; premiums and dues on compensation insurance; employers' payments to unemployment, old age and social security Federal and State funds not including payments deducted from or chargeable to employees or officers; pensions and retirement payments to administrative office employees and accident compensation to office employees (as to self-insurance, see subdivision (i) of this subparagraph.

(i) Subject to the exception stated in this subdivision, in cases where a contracting party assumes its own insurable risks (usually termed ''self-insurance''), losses and payments will be allowed in the cost of performing a contract or subcontract only to the extent of the actual losses suffered or payments incurred during, and in the course of, the performance of the contract or subcontract and properly chargeable to such contract or subcontract. If however, a contracting party assumes its own insurable risks (a) for compensation paid to employees for injuries received in the performance of their duties, or (b) for unemployment risks in States where insurance is required, there may be allowed as a part of the cost of performing a contract or subcontract a reasonable portion of the charges set up for purposes of self-insurance under a system of accounting regularly employed by the contracting party, as determined by the Commissioner of Internal Revenue, at rates not exceeding the lawful or approved rates of insurance companies for such insurance, reduced by amounts representing the acquisition cost in such companies, provided the contracting party adopts and consistently follows this method with respect to self-insurance in connection with all contracts and subcontracts subsequently performed by him.

(ii) Allowances for interest on invested capital are not allowable as costs of performing a contract or subcontract.

(iii) Among the items which shall not be included as a part of the cost of performing a contract or subcontract or considered in determining such cost, are the following: Entertainment expenses; dues and memberships other than of regular trade associations; donations except as otherwise provided above; losses on other contracts; profits or losses from sales or exchanges of capital assets; extraordinary expenses due to strikes or lockouts; fines and penalties; amortization of unrealized appreciation of values of assets; expenses, maintenance and depreciation of excess facilities (including idle land and building, idle parts of a building, and excess machinery and equipment) vacated or abandoned, or not adaptable for future use in performing contracts or subcontracts; increases in reserve accounts for contingencies, repairs, compensation insurance (except as above provided with respect to self-insurance) and guarantee work; Federal and State income and excess-profits taxes and surtaxes; cash discount earned up to one percent of the amount of the purchase, except that all discounts on subcontracts subject to the act will be considered; interest incurred or earned; bond discount or finance charges; premiums for life insurance on the lives of officers; legal and accounting fees in connection with reorganizations, security issues, capital stock issues and the prosecution of claims against the United State (including income tax matters); taxes and expenses on issues and transfers of capital stock; losses on investments; bad debts; and expenses of collection and exchange.

(iv) In order that the cost of performing a contract or subcontract may be accounted for clearly, the amount of any excess profits repayable to the United States pursuant to the act should not be charged to or included in such cost.

(h) *Guarantee expenses.* Guarantee expenses include the various items of factory cost, other manufacturing cost, cost of installation and construction, indirect engineering expenses and other general expenses (see paragraphs (c) to (g), of this section) which are incurred after delivery or installation of the article manufactured or constructed pursuant to the particular contract or subcontract and which are incident to the correction of defects or deficiencies which the contracting party is required to make under the guarantee provisions of the particular contract or subcontract. If the total amount of such guarantee expenses is not ascertainable at the time of filing the report required to be filed with the district director of internal revenue (see §16.15) and the contracting party includes any estimated amount of such expenses as part of the claimed total cost of performing the contract or subcontract, such estimated amount shall be separately shown on the report and the reasons for claiming such estimated amount shall accompany the

report; but only the amount of guarantee expenses actually incurred will be allowed. If the amount of guarantee expenses actually incurred is greater than the amount (if any) claimed on the report and the contracting party has made an overpayment of excess profit, a refund of the overpayment shall be made in accordance with the provisions of § 16.18. If the amount of guarantee expenses actually incurred is less than the amount claimed on the report and an additional amount of excess profit is determined to be due, the additional amount of excess profit shall be assessed and paid in accordance with the provisions of § 16.18.

(i) *Unreasonable compensation.* (1) The salaries and compensation for services which are treated as a part of the cost of performing a contract or subcontract include reasonable payments for salaries, bonuses, or other compensation for services. As a general rule, bonuses paid to employees (and not to officers) in pursuance of a regularly established incentive bonus system may be allowed as a part of the cost of performing a contract or subcontract.

(2) The test of allowability is whether the aggregate compensation paid to each individual is for services actually rendered incident to, and necessary for, the performance of the contract or subcontract, and is reasonable. Excessive or unreasonable payments, whether in cash, stock or other property ostensibly as compensation for services shall not be included in the cost of performing a contract or subcontract.

(j) *Allocation of indirect costs.* No general rule applicable to all cases may be stated for ascertaining the proper proportion of the indirect costs to be allocated to the cost of performing a particular contract or subcontract. Such proper proportion depends upon all the facts and circumstances relating to the performance of the particular contract or subcontract. Subject to a requirement that all items which have no relation to the performance of the contract or subcontract shall be eliminated from the amount to be allocated, the following methods of allocation are outlined as acceptable in a majority of cases:

(1) *Factory indirect expenses.* The allowable indirect factory expenses (see paragraph (c)(5) of this section) shall ordinarily be allocated or ''distributed'' to the cost of the contract or subcontract on the basis of the proportion which the direct productive labor (see paragraph (c)(2) of this section) attributable to the contract or subcontract bears to the total direct productive labor of the production department or particular section thereof during the period within which the contract or subcontract is performed, except that if the indirect factory expenses are incurred in different amounts and in different proportions by the various producing departments consideration shall be given to such circumstances to the extent necessary to make a fair and reasonable determination of the true profit and excess profit.

(2) *Engineering indirect expenses.* The allowable indirect engineering expenses (see paragraph (f) of this section) shall ordinarily be allocated or ''distributed'' to the cost of the contract or subcontract on the basis of the proportion which the direct engineering labor attributable to the contract or subcontract (see paragraph (c)(3) of this section) bears to the total direct engineering labor of the engineering department or particular section thereof during the period within which the contract or subcontract is performed. If the expenses of the engineering department are not sufficient in amount to require the maintenance of separate accounts, the engineering indirect costs may be included in the indirect factory expenses (see paragraph (c)(5) of this section) and allocated or distributed to the cost of performing the contract or subcontract as a part of such expenses, provided the proportion so allocated or distributed is proper under the facts and circumstances relating to the performance of the particular contract or subcontract.

(3) *Administrative expenses (or ''overhead'').* The allowable expenses of administration (see paragraph (g) of this section) or other general expenses except indirect engineering expenses, bidding and general selling expenses, and general servicing expenses shall ordinarily be allocated or distributed to the cost of performing a contract or subcontract on the basis of the proportion which the sum of the manufacturing cost (see paragraph (b) of this section) and the cost of installation and construction (see paragraph (e) of this section) attributable to the particular contract or subcontract bears to the sum of the total manufacturing cost and the total cost of installation and construction during the period within which the contract or subcontract is performed.

(4) *Bidding, general selling, and general servicing expenses.* The allowable bidding and general selling expenses and general servicing expenses (see paragraph (g) (2) and (3) of this section) shall ordinarily be allocated or distributed to the cost of performing a contract or subcontract on the basis of:

(i) The proportion which the contract price of the particular contract or subcontract bears to the total sales made(including contracts or subcontracts completed) during the period within which the particular contract or subcontracts is performed, or

(ii) The proportion which the sum of the manufacturing cost (see paragraph (b) of this section) and the cost of installation and construction (see paragraph (e) of this section) attributable to the particular contract or subcontract bears to the sum of the total manufacturing cost and the total cost of installation and construction during the period

within which the contract or subcontract is performed,

except that special consideration shall be given to the relation which certain classes of such expenses bear to the various classes of articles produced by the contracting party in each case in which such consideration is necessary in order to make a fair and reasonable determination of the true profit and excess profit. See § 16.13.

§ 16.9 *Credit for net loss or for deficiency in profit in computing excess profit.* (a) The term ''net loss'' as used in the act and as applied to contracts and subcontracts for aircraft or portions thereof coming within the regulations prescribed under the act or under 10 U.S.C. 2382 (formerly section 3 of the Act of March 27, 1934 (48 Stat. 505)) means the amount by which the total cost of performing all such contracts and subcontracts for aircraft entered into after April 3, 1939, and completed by a particular contracting party within the income-taxable year exceeds the total contract prices of such contracts and subcontracts. As to the meaning of income-taxable year, see § 16.1.

(b) The term ''deficiency in profit'', as used in the act and as applied to contracts and subcontracts for aircraft or portions thereof coming within the regulations prescribed under the act or under 10 U.S.C. 2882 (formerly section 3 of the Act of March 27, 1934 (48 Stat. 505)), means the amount by which 12 percent of the total contract prices of all such contracts and subcontracts for aircraft entered into after April 3, 1939, and completed by a particular contracting party within the income-taxable year exceeds the net profit upon all such contracts and subcontracts.

(c) A net loss or a deficiency in profit sustained by a contracting party for an income-taxable year is allowable as a credit in computing the contracting party's excess profit on contracts and subcontracts for aircraft coming within the regulations prescribed under the act or under 10 U.S.C. 2382 (formerly section 3 of the Act of March 27, 1934 (48 Stat. 505)) and completed during the four next succeeding income-taxable years. Credit for such a net loss or deficiency in profit may be claimed in the contracting party's annual report of profit filed with the district director of internal revenue (see § 16.15), but it shall be supported by separate schedules for each contract or subcontract involved showing total contract prices, costs of performance and pertinent facts relative thereto, together with a summarized computation of the net loss or deficiency in profit. The net loss or deficiency in profit claimed is subject to verification and adjustment. As to preservation of books and records, see § 16.13.

(d) Net loss or deficiency in profit sustained on contracts and subcontracts completed within one income-taxable year may not be considered in computing net loss or deficiency in profit sustained on contracts and subcontracts completed within another income-taxable year.

(e) The provisions of this section may be illustrated by the following example:

Example. For the calendar year 1939, the A Corporation, which keeps its books and makes its Federal income tax returns on a calendar year basis, sustained a net loss of $30,000 on the contracts and subcontracts for Army aircraft and portions thereof coming within the scope of the act and completed within that year. During the year 1939, the A Corporation also completed contracts for naval aircraft coming within the scope of 10 U.S.C. 2382 (formerly section 3 of the Act of March 27, 1934 (48 Stat. 505)) at a deficiency in profit of $10,000. In 1940, the A Corporation completed similar contracts for Army aircraft totaling $175,000 at a cost of $155,000, whereby the A Corporation realized a net profit of $20,000 but sustained a deficiency in profit of $1,000 (i.e., 12 percent of $175,000, or $21,000, less $20,000. During the year 1940, the A Corporation also completed contracts for naval aircraft coming within the scope of 10 U.S.C. 2382 (formerly section 3 of the Act of March 27, 1934 (48 Stat. 505)) at a net loss of $2,000. In 1941, the A Corporation completed contracts for Army aircraft coming within the scope of the act totaling $400,000 at a cost of $300,000, or at a net profit of $100,000. After deducting from the net profit of $100,000 for the year 1941 the amount of $48,000 (i.e., 12 percent of the total contract price of $400,000), there remains $52,000 in excess profit on the contracts completed in the year 1941. The A Corporation may deduct from such $52,000, in determining the amount of excess profit it must pay for the year 1941 with respect to the contracts completed in such year, the net loss of $30,000 and the deficiency in profit of $10,000 sustained in 1939 on Army and naval aircraft contracts, respectively, and the net loss of $2,000 and the deficiency in profit of $1,000 sustained in 1940 on naval and Army aircraft contracts, respectively.

[T.D. 4909, 4 FR 2733, July 1, 1939, as amended by T.D. 6511, 25 FR 12442, Dec. 6, 1960]

§ 16.10 *Credit for Federal income taxes.* For the purpose of computing the amount of excess profit to be paid to the United States, a credit is allowable against the excess profit for the amount of Federal income taxes paid or remaining to be paid on the amount of such excess profit. The ''Federal income taxes'' in respect of which this credit is allowable include the income taxes imposed by Titles I and IA of the Revenue Act of 1938, and Chapter 1 and Subchapter A of Chapter 2 of the Internal Revenue Code, and the excess-profits taxes imposed by section 602 of the Revenue Act of 1938 and Subchapter B of Chapter 2 of the Internal Revenue Code. This credit is allowable for these taxes only to the

extent that it is affirmatively shown that they have been finally determined and paid or remain to be paid and that they were imposed upon the excess profit against which the credit is to be made. In case such a credit has been allowed and the amount of Federal income taxes imposed upon the excess profit is redetermined, the credit previously allowed shall be adjusted accordingly.

§16.11 *Failure of contractor to require agreement by subcontractor.* (a) Every contract or subcontract coming within the scope of the act and the regulations in this part is required by the act to contain, among other things, an agreement by the contracting party to make no subcontract unless the subcontractor agrees:

(1) To make a report, as described in the act, under oath to the Secretary of War upon the completion of the subcontract;

(2) To pay into the Treasury excess profit, as determined by the Treasury Department, in the manner and amounts specified in the act;

(3) To make no subdivision of the subcontract for the same article or articles for the purpose of evading the provisions of the act;

(4) That the manufacturing spaces and books of its own plant, affiliates, and subdivisions shall at all times be subject to inspection and audit as provided in the act.

(b) If a contracting party enters into a subcontract with a subcontractor who fails to make such agreement, such contracting party shall, in addition to its liability for excess profit determined on contracts or subcontracts performed by it, be liable for any excess profit determined to be due the United States on the subcontract entered into with such subcontractor. In such event, however, the excess profit to be paid to the United States in respect of the subcontract entered into with such subcontractor shall be determined separately from any contracts or subcontracts performed by the contracting party entering into the subcontract with such subcontractor.

§16.12 *Evasion of excess profit.* Section 3 of the act of March 27, 1934, as amended, provides that the contracting party shall agree to make no subdivisions of any contract or subcontract for the same article or articles for the purpose of evading the provisions of the act. If any such subdivision or subcontract is made it shall constitute a violation of the agreement provided for in the act, and the cost of completing a contract or subcontract by a contracting party which violates such agreement shall be determined in a manner necessary clearly to reflect the true excess profit of such contracting party.

§16.13 *Books of account and records.* (a) It is recognized that no uniform method of accounting can be prescribed for all contracting parties subject to the provisions of the act. Each contracting party is required by law to make a report of its true profits and excess profit. Such party must, therefore, maintain such accounting records as will enable it to do so. See §16.8. Among the essentials are the following:

(1) The profit or loss upon a particular contract or subcontract shall be accounted for and fully explained in the books of account separately on each contract or subcontract.

(2) Any cost accounting methods, however standard they may be and regardless of long continued practice, shall be controlled by, and be in accord with, the objectives and purposes of the act and of any regulations prescribed thereunder.

(3) The accounts shall clearly disclose the nature and amount of the different items of cost of performing a contract or subcontract.

(b) In cases where it has been the custom priorly to use so-called ''normal'' rates of overhead expense or administrative expenses, or ''standard'' or ''normal'' prices of material or labor charges, no objection will be made to the use temporarily during the period of performing the contract or subcontract of such methods in charging the contract or subcontract, if the method of accounting employed is such as clearly to reflect, in the final determination upon the books of account, the actual profit derived from the performance of the contract or subcontract and if the necessary adjusting entries are entered upon the books and they explain in full detail the revisions necessary to accord with the facts. As to the elements of cost, see §16.8.

(c) All books, records, and original evidences of costs (including, among other things, production orders, bills or schedules of materials, purchase requisitions, purchase orders, vouchers, requisitions for materials, standing expense orders, inventories, labor time cards, pay rolls, cost distribution sheets) pertinent to the determination of the true profit, excess profit, deficiency in profit or net loss from the performance of a contract or subcontract shall be kept at all times available for inspection by internal-revenue officers, and shall be carefully preserved and retained so long as the contents thereof may become material in the administration of the act. This provision is not confined to books, records, and original evidences pertaining to items which may be considered to be a part of the cost of performing a contract or subcontract. It is applicable to all books, records, and original evidences of costs of each plant, branch or department involved in the performance of a contract or subcontract or in the allocation or distribution of costs to the contract or subcontract.

§16.14 *Report to Secretary of the Army.* (a) Upon the completion of a contract or subcontract coming within the scope of the act and the regulations in this part, the contracting party is required to make a report,

under oath, to the Secretary of the Army. As to the date of completion of a contract or subcontract, see §16.4. Such report shall be in the form prescribed by the Secretary of the Army and shall state the total contract price, the cost of performing the contract, the net income from such contract, and the per centum such income bears to the contract price. The contracting party shall also include as a part of such report a statement showing:

(1) The manner in which the indirect costs were determined and allocated to the cost of performing the contract or subcontract (see §16.8);

(2) The name and address of every subcontractor with whom a subcontract was made, the object of such subcontract, the date when completed and the amount thereof; and

(3) The name and address of each affiliate or other organization, trade or business owned or controlled directly or indirectly by the same interests as those who so own or control the contracting party, together with a statement showing in detail all transactions which were made with such affiliate or other organization, trade or business and are pertinent to the determination of the excess profit.

(b) A copy of the report required to be made to the Secretary of the Army is required to be transmitted by the contracting party to the Secretary of the Treasury. Such copy shall not be transmitted directly to the Secretary of the Treasury but shall be filed as a part of the annual report. See §16.15.

§16.15 *Annual reports for income-taxable years*—(a) *General requirements.* Every contracting party completing a contract or subcontract within the contracting party's income-taxable year ending after April 3, 1939 shall file with the district director of internal revenue for the internal revenue district in which the contracting party's Federal income tax returns are required to be filed an annual report on the prescribed form of the profit and excess profit on all contracts and subcontracts coming within the scope of the act and the regulations in this part and completed within the particular income-taxable year. There shall be included as a part of such a report a statement, preferably in columnar form, showing separately for each such contract or subcontract completed by the contracting party within the income-taxable year the total contract price, the cost of performing the contract or subcontract and the resulting profit or loss on each contract or subcontract together with a summary statement showing in detail the computation of the net profit or net loss upon all contracts and subcontracts completed within the income-taxable year and the amount of the excess profit, if any, for the income-taxable year covered by the report. A copy of the report made to the Secretary of the Army (see §16.14) with respect to each contract or subcontract covered in the annual report, shall be filed as a part of such annual report. In case the income-taxable year of the contracting party is a period of less than twelve months (see §16.1), the report required by this section shall be made for such period and not for a full year.

(b) *Time for filing annual reports.* Annual reports of contracts and subcontracts coming within the scope of the act and the regulations in this part completed by a contracting party within an income-taxable year must be filed on or before the 15th day of the ninth month following the close of the contracting party's income-taxable year. It is important that the contracting party render on or before the due date an annual report as nearly complete and final as it is possible for the contracting party to prepare. An extension of time granted the contracting party for filing its Federal income tax return does not serve to extend the time for filing the annual report required by this section. Authority consistent with authorizations for granting extensions of time for filing Federal income tax returns is hereby delegated to the various collectors of internal revenue for granting extensions of time for filing the reports required by this section. Application for extensions of time for filing such reports should be addressed to the district director of internal revenue for the district in which the contracting party files its Federal income tax returns and must contain a full recital of the causes for the delay.

§16.16 *Payment of excess profit liability.* The amount of the excess profit liability to be paid to the United States shall be paid on or before the due date for filing the report with the district director of internal revenue. See §16.15. At the option of the contracting party, the amount of the excess profit liability may be paid in four equal installments instead of in a single payment, in which case the first installment is to be paid on or before the date prescribed for the payment of the excess profit as a single payment, the second installment on or before the 15th day of the third month, the third installment on or before the 15th day of the sixth month, and the fourth installment on or before the 15th day of the ninth month, after such date.

§16.17 *Liability of surety.* The surety under contracts entered into with the Secretary of the Army for the construction or manufacture of any complete aircraft or any portion thereof for the Army shall not be liable for payment of excess profit due the United States in respect of such contracts.

§16.18 *Determination of liability for excess profit, interest and penalties; assessment, collection, payment, refunds.* (a) The duty of determining the correct amount of excess profit liability on contracts and subcontracts coming within the scope of the act and the regulations in this part is upon the Commissioner of Internal Revenue. Under section

3(b) of the act of March 27, 1934, as last amended, all provisions of law (including the provisions of law relating to interest, penalties and refunds) applicable with respect to the taxes imposed by Title I of the Revenue Act of 1934 and not inconsistent with section 3 of the act of March 27, 1934, as last amended, are applicable with respect to the assessment, collection, or payment of excess profits on contracts and subcontracts coming within the scope of the act and the regulations in this part and to refunds of overpayments of profits into the Treasury under the act. Claims by a contracting party for the refund of an amount of excess profit, interest, penalties, and additions to such excess profit shall conform to the general requirements prescribed with respect to claims for refund of overpayments of taxes imposed by Title I of the Revenue Act of 1934 and, if filed on account of any additional costs incurred pursuant to guarantee provisions in a contract, shall be supplemented by a statement under oath showing the amount and nature of such costs and all facts pertinent thereto.

(b) Administrative procedure for the determination, assessment and collection of excess profit liability under the act and the regulations in this part and the examination of reports and claims in connection therewith will be prescribed from time to time by the Commissioner of Internal Revenue.

PART 17—EXCESS PROFITS ON NAVY CONTRACTS

REGULATIONS FOR INCOME-TAXABLE YEARS ENDING AFTER APRIL 3, 1939

AUTHORITY: Sections 17.1 to 17.19 issued under 52 Stat. 467; 26 U.S.C. 3791. Interpret or apply sec. 3, 48 Stat. 505, as amended, 53 Stat. 112; 34 U.S.C. 496, 26 U.S.C. 650, 651.

SOURCE: Sections 17.1 to 17.19 contained in T.D. 4906, 4 FR 2492, June 27, 1939, except as otherwise noted.

§ 17.1 *Definitions.* As used in the regulations in this part the term:

(a) *Act* means the act of March 27, 1934 (48 Stat. 505; 34 U.S.C. 496), as originally enacted, as amended by the act of June 25, 1936 (49 Stat. 1926; 34 U.S.C. 496), and as further amended by the act of April 3, 1939 (53 Stat. 560; 34 U.S.C. 496).

(b) *Person* includes an individual, a corporation, a partnership, a trust or estate, a joint-stock company, an association, or a syndicate, group, pool, joint venture or other unincorporated organization or group, through or by means of which any business, financial operation or venture is carried on.

(c) *Contract* means an agreement made by authority of the Secretary of the Navy for the construction or manufacture of any complete naval vessel or aircraft or any portion thereof.

(d) *Contractor* means a person entering into a direct contract with the Secretary of the Navy or his duly authorized representative.

(e) *Subcontract* means an agreement entered into by one person with another person for the construction or manufacture of a complete naval vessel or aircraft or any portion thereof, the prime contract for such vessel or aircraft or portion thereof having been entered into between a contractor and the Secretary of the Navy or his duly authorized representative.

(f) *Subcontractor* means any person other than a contractor entering into a subcontract.

(g) *Contracting party* means a contractor or subcontractor as the case may be.

(h) *Contract price* or *contract price* means the amount or total amount to be received under a contract or subcontract as the case may be.

(i) *Income-taxable year* means the calendar year, the fiscal year ending during such calendar year or the fractional part of such calendar or fiscal year, upon the basis of which the contracting party's net income is computed and for which its income tax returns are made for Federal income tax purposes.

§ 17.2 *Scope of this part.* The regulations in this part deal with liability for excess profit on contracts and subcontracts for the construction or manufacture of any complete naval vessel or aircraft or any portion thereof completed within income-taxable years ending after April 3, 1939. As to the date of the completion of a contract or subcontract, see § 17.5.

§ 17.3 *Contracts and subcontracts under which excess profit liability may be incurred.* Except as otherwise provided with respect to contracts or subcontracts for certain scientific equipment (see § 17.4), every contract awarded for an amount exceeding $10,000 and entered into after the enactment of the act of March 27, 1934 for the construction or manufacture of any complete naval vessel or aircraft, or any portion thereof, is subject to the provisions of the act relating to excess profit liability. Any subcontract made with respect to such a contract and involving an amount in excess of $10,000 is also within the scope of the act. If a contracting party places orders with another party, aggregating an amount in excess of $10,000, for articles or materials which constitute a part of the cost of performing the contract or subcontract, the placing of such orders shall constitute a subcontract within the scope of the act, unless it is clearly shown that each of the orders involving $10,000 or less is a bona fide separate and distinct subcontract and not a subdivision made for the purpose of evading the provisions of the act.

§ 17.4 *Contracts or subcontracts for scientific equipment.* No excess profit liability is incurred upon a contract or subcontract entered into after the amendment of section

3(b) of the act of June 25, 1936, if at the time or prior to the time such contract or subcontract is made it is designated by the Secretary of the Navy as being exempt under the provisions of the act pertaining to scientific equipment used for communication, target detection, navigation, or fire control. The exemption of contracts or subcontracts for scientific equipment does not extend to any contract or subcontract entered into prior to the enactment of such amendment of section 3(b) of the act.

§ 17.5 *Completion of contract defined.* The date of delivery of the vessel, aircraft or portion thereof covered by the contract or subcontract shall be considered the date of completion of the contract or subcontract unless otherwise determined jointly by the Secretary of the Navy and the Secretary of the Treasury or their duly authorized representatives. Except as otherwise provided in the preceding sentence, the replacement of defective parts of delivered articles or the performance of other guarantee work in respect to such articles will not operate to extend the date of completion. As to the treatment of the cost of such work as a cost of performing a contract or subcontract, see § 17.9(h). As to a refund in case of adjustment due to any subsequently incurred additional costs, see § 17.19. If a contract or subcontract is at any time cancelled or terminated, it is completed at the time of the cancellation or termination.

§ 17.6 *Manner of determining liability with respect to contracts or subcontracts for complete naval vessles or portions thereof.* If in an income-taxable year ending after April 3, 1939 a contracting party completes one or more contracts or subcontracts coming within the scope of the act and entered into for the construction or manufacture of any complete naval vessel or any portion thereof, the amount of excess profit to be paid to the United States with respect to all such contracts and subcontracts completed within the income-taxable year shall be computed as follows:

(a) The first step is to ascertain the total contract prices of all such contracts and subcontracts completed by the contracting party within the income-taxable year. As to total contract prices, see §§ 17.1 and 17.8.

(b) The second step is to ascertain the cost of performing such contracts and subcontracts (see § 17.9) and to deduct such cost from the total contract prices of such contracts and subcontracts as computed in the first step.

The amount remaining after such subtraction is the amount of net profit or net loss upon such contracts and subcontracts completed within the income-taxable year.

(c) The third step, in case there is a new profit upon such contracts and subcontracts, is to subtract from the amount of such net profit as computed in the second step the sum of:

(1) An amount equal to 10 percent of the total contract prices of such contracts and subcontracts completed within the income-taxable year; and

(2) The amount of any net loss which was sustained in the preceding income-taxable year with respect to contracts or subcontracts entered into for the construction or manufacture of any complete naval vessel or any portion thereof, and which is allowable as a credit in determining the excess profit for the income-taxable year with respect to contracts and subcontracts entered into for the construction or manufacture of any complete naval vessel or any portion thereof (see § 17.10(a)).

The amount remaining after such subtraction is the amount of excess profit for the income-taxable year with respect to contracts and subcontracts entered into for the construction or manufacture of any complete naval vessel or any portion thereof.

(d) The fourth step is to ascertain the amount of credit allowed for Federal income taxes paid or remaining to be paid upon the amount of such excess profit as computed in the third step (see § 17.11) and then subtract from the amount of such excess profit the amount of credit for Federal income taxes. The amount remaining after this subtraction is the amount of excess profit to be paid to the United States by the contracting party for the income-taxable year with respect to contracts and subcontracts entered into for the construction or manufacture of any complete naval vessel or any portion thereof and completed within the income- taxable year.

(e) The application of the provisions of this section of the regulations may be illustrated by the following example:

Example: On September 1, 1939 the A Corporation, which keeps its books and makes its Federal income tax returns on a calendar year basis, entered into a contract with the Secretary of the Navy for the construction of portions of a naval vessel coming within the scope of the act, the total contract price of which $200,000. On March 10, 1940 the A Corporation entered into another such contract, the total contract price of which was $40,000. Both contracts were completed within the calendar year 1940, the first at a cost of $155,000 and the second at a cost of $45,000. During the year 1940 the A Corporation also completed at a loss of $10,000 two contracts entered into for the construction or manufacture of naval aircraft coming within the scope of the act. For the year 1939 the A Corporation sustained a net loss of $2,500 on all contracts and subcontracts for any complete naval vessel or any portion thereof coming within the scope of the act and completed within the calendar year 1939. For the year 1939 the A Corporation also sustained a net

loss of $1,800 on all other contracts and subcontracts coming within the scope of the act which were completed within the calendar year 1939. For purposes of Federal income tax, the net income of the A Corporation for the year 1940 amounted to $96,000, which amount included the net profit of $40,000 upon the contracts entered into on September 1, 1939 and March 10, 1940. For the year 1940 the A Corporation paid Federal income taxes amounting to $19,200. The excess profit liability of the A Corporation for 1940 is payable with respect to the contracts for portions of a naval vessel which were completed in 1940. The loss of $10,000 on other contracts completed in 1940 and the net loss of $1,800 for 1939 on contracts and subcontracts for naval aircraft do not enter into the computation of such liability. Accordingly, the excess profit liability of the A Corporation for 1940 is $10,800 computed as follows:

Total contract prices:		
Contract No. 1	$200,000	
Contract No. 2	40,000	
		$240,000
Less cost of performing contracts:		
Contract No. 1	155,000	
Contract No. 2	45,000	
		200,000
Net profit on contracts		40,000
Less:		
10 percent of total contract prices (10 percent of $240,000)	24,000	
Net loss from 1939	2,500	
		26,500
Excess profit for year 1940		13,500
Less credit for Federal income taxes (Federal income tax on $13,500 at rates for 1940)		2,700
Amount of excess profit payable to the United States		10,800

§ 17.7 *Manner of determining liability with respect to contracts or subcontracts for complete naval aircraft or portions thereof.* If in an income-taxable year ending after April 3, 1939 a contracting party completes one or more contracts or subcontracts coming within the scope of the act and entered into for the construction or manufacture of any complete naval aircraft or any portion thereof, the amount of excess profit to be paid to the United States with respect to all such contracts and subcontracts completed within the income-taxable year shall be computed as follows:

(a) The first step is to ascertain the total contract prices of all such contracts and subcontracts completed by the contracting party within the income-taxable year. As to total contract prices, see §§ 17.1 and 17.8.

(b) The second step is to ascertain the cost of performing such contracts and subcontracts (see § 17.9) and to deduct such cost from the total contract prices of such contracts and subcontracts as computed in the first step.

The amount remaining after such subtraction is the amount of net profit or net loss upon such contracts and subcontracts completed within the income-taxable year.

(c) The third step, in case there is a net profit upon such contracts and subcontracts, is to subtract from the amount of such net profit as computed in the second step the sum of:

(1) An amount equal to 12 percent of the total contract prices of such contracts and subcontracts completed within the income-taxable year;

(2) The amount of any net loss which was sustained in the same or a prior income- taxable year with respect to contracts or subcontracts for the construction or manufacture of any complete aircraft or any portion thereof, and which is allowable as a credit in determining the excess profit for the income-taxable year with respect to contracts and subcontracts entered into for the construction or manufacture of complete aircraft or any portion thereof (see § 17.10(b)); and

(3) The amount of any deficiency in profit which was sustained in the same or a prior income-taxable year with respect to contracts or subcontracts for the construction or manufacture of any complete aircraft or any portion thereof, and which is allowable as a credit in determining the excess profit for the income-taxable year with respect to contracts and subcontracts entered into for the construction or manufacture of complete aircraft or any portion thereof (see § 17.10(c)).

The amount remaining after such subtraction is the amount of excess profit for the income-taxable year with respect to contracts and subcontracts entered into for the construction or manufacture of complete naval aircraft or any portion thereof.

(d) The fourth step is to ascertain the amount of credit allowed for Federal income taxes paid or remaining to be paid upon the amount of such excess profit as computed in the third step (see § 17.11) and then subtract from the amount of such excess profit the amount of credit for Federal income taxes. The amount remaining after this subtraction is the amount of excess profit to be paid to the United States by the contracting party for the income-taxable year with respect to contracts and subcontracts entered into for the construction or manufacture of complete naval aircraft or any portion thereof and completed within the income-taxable year.

(e) The application of the provisions of this section of the regulations may be illustrated by the following example:

Example. On September 1, 1939, the B Corporation, which keeps its books and makes its Federal income tax returns on a calendar year basis, entered into a contract with the Secretary of the Navy for the construction of naval aircraft coming within the scope of the act, the total contract price of which was $200,000. On March 10, 1940, the B Corporation entered into another such contract, the total contract price of which was $40,000. Both contracts were completed within the calendar year 1940, the first at a cost of $155,000 and the second at a cost of $45,000. During the year 1940, the B Corporation also completed at a deficiency in profit of $2,000 a contract entered into for the construction of Army aircraft coming within the scope of the act. During the year 1940, the B Corporation also completed at a loss of $10,000 two contracts entered into for the construction or manufacture of portions of a naval vessel coming within the scope of the act. For the year 1939, the B Corporation sustained a net loss of $2,500 and a deficiency in profit of $1,000 on all contracts and subcontracts for naval aircraft coming within the scope of the act and completed within the calendar year 1939. For the year 1939, the B Corporation also sustained a net loss of $1,800 on a contract for the construction of Army aircraft coming within the scope of the act which was completed within the calendar year 1939. For the purposes of the Federal income tax, the net income of the B Corporation for the year 1940, on which the tax was paid, amounted to $96,000, which included the net profit of $40,000 upon the contracts entered into on September 1, 1939, and March 10, 1940. The excess profit liability of the B Corporation for 1940 is payable with respect to the contracts for naval aircraft which were completed in 1940. The loss of $10,000 on the contracts for portions of a naval vessel completed in 1940 does not enter into the computation of such liability. Accordingly, the excess profit liability of the B Corporation for 1940 is $2,964 computed as follows:

Total contract prices:		
Contract No. 1	$200,000	
Contract No. 2	40,000	
		$240,000
Less: Cost of performing contracts:		
Contract No. 1	155,000	
Contract No. 2	45,000	
		200,000
Net profit on contracts		40,000
Less:		
12 percent of total contract prices (12 percent of $240,000)	28,800	
Deficiency in profit (in Army aircraft contracts) in 1940	2,000	
Net loss (in naval aircraft contracts) from 1939	2,500	
Net loss (in Army aircraft contracts) from 1939	1,800	
Deficiency in profit (in naval aircraft contracts) from 1939	1,000	
		36,100
Excess profit for year 1940		3,900
Less: Credit for Federal income taxes (Federal income tax on $3,900 at rates for 1940)		936
Amount of excess profit payable to the United States		2,964

[T.D. 4906, 4 FR 2492, June 27, 1939, as amended by T.D. 6512, 25 FR 12443, Dec. 6, 1960]

§ 17.8 *Total contract price*. The total contract price of a particular contract or subcontract (see § 17.1) may be received in money or its equivalent. If something other than money is received, only the fair market value of the thing received, at the date of receipt, is to be included in determining the amount received. Bonuses earned for bettering performance and penalties incurred for failure to meet the contract guarantees are to be regarded as adjustments of the original contract price. Trade or other discounts granted by a contracting party in respect of a contract or subcontract performed by such party are also to be deducted in determining the true total contract price of such contract or subcontract.

§ 17.9 *Cost of performing a contract or subcontract*—(a) *General rule*. The cost of performing a particular contract or subcontract shall be the sum of (1) the direct costs, including therein expenditures for materials, direct labor and direct expenses, incurred by the contracting party in performing the contract or subcontract; and (2) the proper proportion of any indirect costs (including therein a reasonable proportion of management expenses) incident to and necessary for the performance of the contract or subcontract.

(b) *Elements of cost*. No definitions of the elements of cost may be stated which are of invariable application to all contractors and subcontractors. In general, the elements of cost may be defined for purposes of the act as follows:

(1) Manufacturing cost, which is the sum of factory cost (see paragraph (c) of this section) and other manufacturing cost (see paragraph (d) of this section);

(2) Miscellaneous direct expenses (see paragraph (e) of this section);

(3) General expenses, which are the sum of indirect engineering expenses, usually termed ''engineering overhead'' (see paragraph (f) of this section) and expenses of distribution, servicing and administration (see paragraph (g) of this section); and

(4) Guarantee expenses (see paragraph (h) of this section).

(c) *Factory cost*. Factory cost is the sum of the following:

(1) *Direct materials*. Materials, such as those purchased for stock and subsequently issued for contract operations and those acquired under subcontracts, which become a component part of the finished product or which are used directly in fabricating, converting or processing such materials or parts.

(2) *Direct productive labor*. Productive labor, usually termed ''shop labor,'' which is performed on and is properly chargeable directly to the article manufactured or constructed pursuant to the contract or subcontract, but which ordinarily does not include direct engineering labor (see subparagraph (3) of this paragraph).

(3) *Direct engineering labor*. The compensation of professional engineers and other technicists (including reasonable advisory fees), and of draftsmen, properly chargeable directly to the cost of the contract or subcontract.

(4) *Miscellaneous direct factory charges*. Items which are properly chargeable directly to the factory cost of performing the contract or subcontract but which do not come within the classifications in subparagraphs (1), (2), and (3) of this paragraph, as for example, royalties which the contracting party pays to another party and which are properly chargeable to the cost of performing the contract or subcontract (but see paragraph (d) of this section).

(5) *Indirect factory expenses*. Items, usually termed ''factory overhead,'' which are not directly chargeable to the factory cost of performing the contract or subcontract but which are properly incident to and necessary for the performance of the contract or subcontract and consist of the following:

(i) *Labor*. Amounts expended for factory labor, such as supervision and inspection, clerical labor, timekeeping, packing and shipping, stores supply, services of tool crib attendants, and services in the factory employment bureau, which are not chargeable directly to productive labor of the contract or subcontract.

(ii) *Materials and supplies*. The cost of materials and supplies for general use in the factory in current operations, such as shop fuel, lubricants, heat-treating, plating, cleaning and anodizing supplies, nondurable tools and gauges, stationery (such as time tickets and other forms), and boxing and wrapping materials.

(iii) *Service expenses*. Factory expenses of a general nature, such as those for power, heat and light (whether purchased or produced), ventilation and air conditioning and operation and maintenance of general plant assets and facilities.

(iv) *Fixed charges and obsolescence*. Recurring charges with respect to property used for manufacturing purposes of the contract or subcontract, such as premiums for fire and elevator insurance, property taxes, rentals and allowances for depreciation of such property, including maintenance and depreciation of reasonable standby equipment; and depreciation and obsolescence of special equipment and facilities necessarily acquired primarily for the performance of the contract or subcontract. In making allowances for depreciation, consideration shall be given to the number and length of shifts.

(v) *Miscellaneous indirect factory expenses*. Miscellaneous factory expenses not directly chargeable to the factory cost of performing the contract or subcontract, such as purchasing expenses; ordinary and necessary expenses of rearranging facilities within a department or plant; employees' welfare expenses; premiums or dues on compensation insurance; employers' payments to unemployment, old age and social security, Federal and State funds not including payments deducted from or chargeable to employees or officers; pensions and retirement payments to factory employees; factory accident compensation (as to self-insurance, see paragraph (g) of this section); but not including any amounts which are not incident to services, operations, plant, equipment or facilities involved in the performance of the contract or subcontract.

(d) *Other manufacturing cost*. Other manufacturing cost as used in paragraph (b) of this section includes items of manufacturing costs which are not properly or satisfactorily chargeable to factory costs (see paragraph (c) of this section) but which upon a complete showing of all pertinent facts are properly to be included as a cost of performing the contract or subcontract, as for instance, payments of royalties and amortization of the cost of designs purchased and patent rights over their useful life; and ''deferred'' or ''unliquidated'' experimental and development charges. For example, in case experimental and development costs have been properly deferred or capitalized and are amortized in accordance with a reasonably consistent plan, a proper portion of the current charge, determined by a ratable allocation which is reasonable in consideration of the pertinent facts, may be treated as a cost of performing the contract or subcontract. In the case of general experimental and development expenses which may be charged off currently, a reasonable portion thereof may be allocated to the cost of performing the contract or subcontract. If a special experimental or development project is carried on in pursuance of a contract, or in anticipation of a contract which is later entered into, and the expense is not treated as a part of general experimental and development expenses or is not otherwise allowed as a cost of performing the contract, there clearly appearing no reasonable prospect of an additional contract for the type of article involved, the entire cost of such project may be allowed as a part of the cost of performing the contract.

(e) *Miscellaneous direct expenses.* Miscellaneous direct expenses as used in paragraph (b) of this section include:

(1) *Cost of installation and construction.* Cost of installation and construction includes the cost of materials, labor and expenses necessary for the erection and installation prior to the completion of the contract and after the delivery of the product or material manufactured or constructed pursuant to the contract or subcontract.

(2) *Sundry direct expenses.* Items of expense which are properly chargeable directly to the cost of performing a contract or subcontract and which do not constitute guarantee expenses (see paragraph (h) of this section) or direct costs classified as factory cost or other manufacturing cost (see paragraphs (c) and (d) of this section), such as premiums on performance or other bonds required under the contract or subcontract; State sales taxes imposed on the contracting party; freight on outgoing shipments; fees paid for wind tunnel and model basin tests; demonstration and test expenses; crash insurance premiums; traveling expenses. In order for any such item to be allowed as a charge directly to the cost of performing a contract or subcontract, (i) a detailed record shall be kept by the contracting party of all items of a similar character, and (ii) no item of a similar character which is properly a direct charge to other work shall be allowed as a part of any indirect expenses in determining the proper proportion thereof chargeable to the cost of performing the contract or subcontract. As to allowable indirect expenses, see paragraphs (c)(5), (f), (g), and (j) of this section.

(f) *Indirect engineering expenses.* Indirect engineering expenses, usually termed ''engineering overhead,'' which are treated in this section as a part of general expenses in determining the cost of performing a contract or subcontract (see paragraph (b) of this section), comprise the general engineering expenses which are incident to and necessary for the performance of the contract or subcontract, such as the following:

(1) *Labor.* Reasonable fees of engineers employed in a general consulting capacity, and compensation of employees for personal services to the engineering department, such as supervision, which is properly chargeable to the contract or subcontract, but which is not chargeable as direct engineering labor (see paragraph (c)(3) of this section).

(2) *Material.* Supplies for the engineering department, such as paper and ink for drafting and similar supplies.

(3) *Miscellaneous expenses.* Expenses of the engineering department, such as (i) maintenance and repair of engineering equipment, and (ii) services purchased outside of the engineering department for blue- printing, drawing, computing, and like purposes.

(g) *Expenses of distribution, servicing and administration.* Expenses of distribution, servicing and administration, which are treated in this section as a part of general expenses in determining the cost of performing a contract or subcontract (see paragraph (b) of this section), comprehend the expenses incident to and necessary for the performance of the contract or subcontract, which are incurred in connection with the distribution and general servicing of the contracting party's products and the general administration of the business, such as:

(1) *Compensation for personal services of employees.* The salaries of the corporate and general executive officers and the salaries and wages of administrative clerical employees and of the office services employees such as telephone operators, janitors, cleaners, watchmen and office equipment repairmen.

(2) *Bidding and general selling expenses.* Bidding and general selling expenses which by reference to all the pertinent facts and circumstances reasonably constitute a part of the cost of performing a contract or subcontract. The treatment of bidding and general selling expenses as a part of general expenses in accordance with this paragraph is in lieu of any direct charges which otherwise might be made for such expenses. The term ''bidding expenses'' as used in this section includes all expenses in connection with preparing and submitting bids.

(3) *General servicing expenses.* Expenses which by reference to all the pertinent facts and circumstances reasonably constitute a part of the cost of performing a contract or subcontract and which are incident to delivered or installed articles and are due to ordinary adjustments or minor defects; but including no items which are treated as a part of guarantee expenses (see paragraph (h) of this section) or as a part of direct costs, such as direct materials, direct labor, and other direct expense.

(4) *Other expenses.* Miscellaneous office and administrative expenses, such as stationery and office supplies; postage; repair and depreciation of office equipment; contributions to local charitable or community organizations to the extent constituting ordinary and necessary business expenses; employees' welfare expenses; premiums and dues on compensation insurance; employers' payments to unemployment, old age and social security Federal and State funds not including payments deducted from or chargeable to employees or officers; pensions and retirement payments to administrative office employees and accident compensation to office employees (as to self-insurance, see subdivision (i) of this subparagraph).

(i) Subject to the exception stated in this subdivision, in cases where a contracting party assumes its own insurable risks (usually termed ''self-insurance''), losses and

payments will be allowed in the cost of performing a contract or subcontract only to the extent of the actual losses suffered or payments incurred during, and in the course of, the performance of the contract or subcontract and properly chargeable to such contract or subcontract. If, however, a contracting party assumes its own insurable risks *(a)* for compensation paid to employees for injuries received in the performance of their duties, or *(b)* for unemployment risks in States where insurance is required, there may be allowed as a part of the cost of performing a contract or subcontract a reasonable portion of the charges set up for purposes of self-insurance under a system of accounting regularly employed by the contracting party, as determined by the Commissioner of Internal Revenue, at rates not exceeding the lawful or approved rates of insurance companies for such insurance, reduced by amounts representing the acquisition cost in such companies, provided the contracting party adopts and consistently follows this method with respect to self-insurance in connection with all contracts and subcontracts subsequently performed by him.

(ii) Allowances for interest on invested capital are not allowable as costs of performing a contract or subcontract.

(iii) Among the items which shall not be included as a part of the cost of performing a contract or subcontract or considered in determining such cost, are the following: Entertainment expenses; dues and memberships other than of regular trade associations; donations except as otherwise provided above; losses on other contracts; profits or losses from sales or exchanges of capital assets; extraordinary expenses due to strikes or lockouts; fines and penalties; amortization of unrealized appreciation of values of assets; expenses, maintenance and depreciation of excess facilities (including idle land and building, idle parts of a building, and excess machinery and equipment) vacated or abandoned, or not adaptable for future use in performing contracts or subcontracts; increases in reserve accounts for contingencies, repairs, compensation insurance (except as above provided with respect to self-insurance) and guarantee work; Federal and State income and excess-profits taxes and surtaxes; cash discount earned up to one percent of the amount of the purchase, except that all discounts on subcontracts subject to the act will be considered; interest incurred or earned; bond discount or finance charges; premiums for life insurance on the lives of officers; legal and accounting fees in connection with reorganizations, security issues, capital stock issues and the prosecution of claims against the United States (including income tax matters); taxes and expenses on issues and transfers of capital stock; losses on investments; bad debts; and expenses of collection and exchange.

(iv) In order that the cost of performing a contract or subcontract may be accounted for clearly, the amount of any excess profits repayable to the United States pursuant to the act should not be charged to or included in such cost.

(h) *Guarantee expenses.* Guarantee expenses include the various items of factory, cost, other manufacturing cost, cost of installation and construction, indirect engineering expenses and other general expenses (see paragraphs (c) to (g) of this section) which are incurred after delivery or installation of the article manufactured or constructed pursuant to the particular contract or subcontract and which are incident to the correction of defects or deficiencies which the contracting party is required to make under the guarantee provisions of the particular contract or subcontract. If the total amount of such guarantee expenses is not ascertainable at the time of filing the report required to be filed with the district director of internal revenue (see §17.16) and the contracting party includes any estimated amount of such expenses as part of the claimed total cost of performing the contract or subcontract, such estimated amount shall be separately shown on the report and the reasons for claiming such estimated amount shall accompany the report; but only the amount of guarantee expenses actually incurred will be allowed. If the amount of guarantee expenses actually incurred is greater than the amount (if any) claimed on the report and the contracting party has made an overpayment of excess profit, a refund of the overpayment shall be made, in accordance with the provisions of §17.19. If the amount of guarantee expenses actually incurred is less than the amount claimed on the report and an additional amount of excess profit is determined to be due, the additional amount of excess profit shall be assessed and paid in accordance with the provisions of §17.19.

(i) *Unreasonable compensation.* (1) The salaries and compensation for services which are treated as a part of the cost of performing a contract or subcontract include reasonable payments for salaries, bonuses, or other compensation for services. As a general rule, bonuses paid to employees (and not to officers) in pursuance of a regularly established incentive bonus system may be allowed as a part of the cost of performing a contract or subcontract.

(2) The test of allowability is whether the aggregate compensation paid to each individual is for services actually rendered incident to, and necessary for, the performance of the contract or subcontract, and is reasonable. Excessive or unreasonable payments whether in cash, stock or other property ostensibly as compensation for services shall

not be included in the cost of performing a contract or subcontract.

(j) *Allocation of indirect costs.* No general rule applicable to all cases may be stated for ascertaining the proper proportion of the indirect costs to be allocated to the cost of performing a particular contract or subcontract. Such proper proportion depends upon all the facts and circumstances relating to the performance of the particular contract or subcontract. Subject to a requirement that all items which have no relation to the performance of the contract or subcontract shall be eliminated from the amount to be allocated, the following methods of allocation are outlined as acceptable in a majority of cases:

(1) *Factory indirect expenses.* The allowable indirect factory expenses (see paragraph (c)(5) of this section) shall ordinarily be allocated or ''distributed'' to the cost of the contract or subcontract on the basis of the proportion which the direct productive labor (see paragraph (c)(2) of this section) attributable to the contract or subcontract bears to the total direct productive labor of the production department or particular section thereof during the period within which the contract or subcontract is performed, except that if the indirect factory expenses are incurred in different amounts and in different proportions by the various producing departments consideration shall be given to such circumstances to the extent necessary to make a fair and reasonable determination of the true profit and excess profit.

(2) *Engineering indirect expenses.* The allowable indirect engineering expenses (see paragraph (f) of this section) shall ordinarily be allocated or ''distributed'' to the cost of the contract or subcontract on the basis of the proportion which the direct engineering labor attributable to the contract or subcontract (see paragraph (c)(3) of this section) bears to the total direct engineering labor of the engineering department or particular section thereof during the period within which the contract or subcontract is performed. If the expenses of the engineering department are not sufficient in amount to require the maintenance of separate accounts, the engineering indirect costs may be included in the indirect factory expenses (see paragraph (c)(5) of this section) and allocated or distributed to the cost of performing the contract or subcontract as a part of such expenses, provided the proportion so allocated or distributed is proper under the facts and circumstances relating to the performance of the particular contract or subcontract.

(3) *Administrative expenses (or ''overhead'').* The allowable expenses of administration (see paragraph (g) of this section) or other general expenses except indirect engineering expenses, bidding and general selling expenses, and general servicing expenses shall ordinarily be allocated or distributed to the cost of performing a contract or subcontract on the basis of the proportion which the sum of the manufacturing cost (see paragraph (b) of this section) and the cost of installation and construction (see paragraph (e) of this section) attributable to the particular contract or subcontract bears to the sum of the total manufacturing cost and the total cost of installation and construction during the period within which the contract or subcontract is performed.

(4) *Bidding, general selling, and general servicing expenses.* The allowable bidding and general selling expenses and general servicing expenses (see paragraph (g) (2) and (3) of this section) shall ordinarily be allocated or distributed to the cost of performing a contract or subcontract on the basis of:

(i) The proportion which the contract price of the particular contract or subcontract bears to the total sales made (including contracts or subcontracts completed) during the period within which the particular contract or subcontract is performed, or

(ii) The proportion which the sum of the manufacturing cost (see paragraph (b) of this section) and the cost of installation and construction (see paragraph (e) of this section) attributable to the particular contract or subcontract bears to the sum of the total manufacturing cost and the total cost of installation and construction during the period within which the contract or subcontract is performed.

except that special consideration shall be given to the relation which certain classes of such expenses bear to the various classes of article produced by the contracting party in each case in which such consideration is necessary in order to make a fair and reasonable determination of the true profit and excess profit. See § 17.14.

§ 17.10 *Credits for net loss and deficiency in profit in computing excess profit—(a) Net loss on contracts and subcontracts for naval vessels or portions thereof.* In the case of contracts or subcontracts for the construction or manufacture of any complete naval vessel or any portion thereof coming within the scope of the act which are completed within an income-taxable year ending after April 3, 1939, the term ''net loss'' as used in the act and in this part means the amount by which the total costs of performing all such contracts and subcontracts completed within such income-taxable year exceeds the total contract prices of such contracts and subcontracts. Such net loss sustained by a contracting party for an income-taxable year ending after April 3, 1939, is allowable as a credit in computing the contracting party's excess profit on contracts and subcontracts for the construction or manufacture of any complete naval vessel or any portion thereof which are completed within the next succeeding income-taxable year.

(b) *Net loss on contracts and subcontracts for aircraft or portions thereof.* In the case of contracts or subcontracts for the construction or manufacture of any complete aircraft or any portion thereof coming within the scope of the act, which are completed within an income-taxable year ending after April 3, 1939, the term ''net loss'' as used in the act and in these regulations means the amount by which the total costs of performing all such contracts and subcontracts completed within such income-taxable year exceeds the total contract prices of such contracts and subcontracts. Such net loss sustained by a contracting party for an income-taxable year ending after April 3, 1939, is allowable as a credit in computing the contracting party's excess profit on contracts and subcontracts for the construction or manufacture of any complete aircraft or any portion thereof which are completed within the four next succeeding income-taxable years.

(c) *Deficiency in profit.* The term ''deficiency in profit'' as used in the act and in this part relates to contracts and subcontracts coming within the scope of the act which are for the construction or manufacture of any complete aircraft or any portion thereof and are completed within an income-taxable year ending after April 3, 1939. As so used, the term ''deficiency in profit'' means the amount by which 12 percent of the total contract prices of such contracts and subcontracts which are completed by a particular contracting party within the income-taxable year exceeds the net profit upon such contracts and subcontracts. A deficiency in profit sustained by a contracting party with respect to such contracts and subcontracts for the construction or manufacture of complete aircraft or any portion thereof and completed within any income-taxable year ending after April 3, 1939, is allowable as a credit in computing the contracting party's excess profit on contracts and subcontracts for the construction or manufacture of complete aircraft or any portion thereof which are completed within the same or the four next succeeding income-taxable years.

(d) *Claim for credit.* Credit for a deficiency in profit or a net loss may be claimed in the contracting party's annual report of profit filed with the district director of internal revenue (see § 17.16), but it shall be supported by separate schedules for each contract or subcontract involved showing total contract prices, costs of performance and pertinent facts relative thereto, together with a summarized computation of the deficiency in profit or net loss. The deficiency in profit or net loss claimed is subject to verification and adjustment. As to preservation of books and records, see § 17.14. A deficiency in profit or net loss sustained on contracts and subcontracts completed within one income-taxable year may not be considered in computing a net loss or deficiency in profit sustained on contracts and subcontracts completed within another income- taxable year.

(e) *Examples.* The provisions of this section of the regulations may be illustrated by the following examples:

Example (1) For the calendar year 1939 the A Corporation, which keeps its books and makes its Federal income tax returns on a calendar year basis, sustained a net loss of $50,000 upon all contracts and subcontracts coming within the scope of the act which were entered into for the construction or manufacture of any complete naval vessel or any portion thereof and were completed within the calendar year 1939. For the calendar year 1940 the A Corporation had a net profit of $30,000 upon all such contracts and subcontracts completed within the year 1940. It also had a net profit of $10,000 upon other contracts completed within that year all such contracts being for naval aircraft coming within the scope of the act. For the calendar year 1941 the corporation had a net profit of $25,000 upon contracts completed within that year. The net loss of $50,000 sustained in 1939 may be taken as a credit against the net profit of $30,000 realized in 1940 upon the contracts for the construction or manufacture of complete naval vessels or portions thereof completed within that year; but the excess of $20,000 ($50,000 minus $30,000) may not be taken as a credit in computing the excess profit realized upon the other contracts completed in 1940 at a net profit of $10,000 or as a credit in computing the excess profit upon the contracts completed within the year 1941 at a net profit of $25,000.

Example (2). For the calendar year 1939, the B Corporation, which keeps its books and makes its Federal income tax returns on a calendar year basis, sustained a net loss of $10,000 and a deficiency in profit of $35,000 upon all contracts and subcontracts for naval aircraft and portions thereof coming within the scope of the act and completed within that year. During the year 1939, the B Corporation also completed contracts for Army aircraft coming within the scope of the Act at a net profit which was $15,000 in excess of 12 percent of the total contract prices of such contracts. On all contracts and subcontracts for naval aircraft coming within the scope of the act and completed within the calendar year 1940, the B Corporation realized a net profit which was $25,000 in excess of 12 percent of the total contract prices of such contracts and subcontracts while sustaining a deficiency in profit of $10,000 on like contracts and subcontracts for Army aircraft. On all contracts and subcontracts for naval aircraft coming within the scope of the act and completed within the calendar year 1941, the B Corporation realized a net profit which was $20,000 in excess of 12 percent of the total contract prices of such contracts. The net loss of $10,000 and deficiency

in profit of $35,000 (or a total of $45,000) sustained in 1939 with respect to contracts and subcontracts for naval aircraft completed within that year may be taken as a credit to the extent of $15,000 in computing the excess profit on the contracts and subcontracts for Army aircraft completed in 1939. The remainder of such net loss and such deficiency in profit ($45,000 minus $15,000, or $30,000) may be combined with the deficiency in profit of $10,000 sustained in 1940 on contracts for Army aircraft and taken as a credit to the extent of $25,000 in computing the excess profit on the contracts and subcontracts for aircraft completed during 1940. The sum of such net loss and such deficiency in profit then remaining ($40,000 minus $25,000, or $15,000) may be taken as a credit in computing the excess profit realized on the contracts and subcontracts for aircraft completed in the year 1941.

[T.D. 4906, 4 FR 2492, June 27, 1939, as amended by T.D. 6512, 25 FR 12444, Dec. 6, 1960]

§ 17.11 *Credit for Federal income taxes.* For the purpose of computing the amount of excess profit to be paid to the United States, a credit is allowable against the excess profit for the amount of Federal income taxes paid or remaining to be paid on the amount of such excess profit. The ''Federal income taxes'' in respect of which this credit is allowable include the income taxes imposed by Titles I and IA of the Revenue Act of 1938, and Chapter 1 and Subchapter A of Chapter 2 of the Internal Revenue Code, and the excess-profits taxes imposed by section 602 of the Revenue Act of 1938, and Subchapter B of Chapter 2 of the Internal Revenue Code. This credit is allowable for these taxes only to the extent that it is affirmatively shown that they have been finally determined and paid or remain to be paid and that they were imposed upon the excess profit against which the credit is to be made. In case such a credit has been allowed and the amount of Federal income taxes imposed upon the excess profit is redetermined, the credit previously allowed shall be accordingly adjusted.

§ 17.12 *Failure of contractor to require agreement by subcontractor.* (a) Every contract or subcontract coming within the scope of the act is required by the act to contain, among other things, an agreement by the contracting party to make no subcontract unless the subcontractor agrees:

(1) To make a report, as described in the act, under oath to the Secretary of the Navy upon the completion of the subcontract;

(2) To pay into the Treasury excess profit, as determined by the Treasury Department, in the manner and amounts specified in the act;

(3) To make no subdivision of the subcontract for the same article or articles for the purpose of evading the provisions of the act;

(4) That the manufacturing spaces and books of its own plant, affiliates, and subdivisions shall at all times be subject to inspection and audit as provided in the act.

(b) If a contracting party enters into a subcontract with a subcontractor who fails to make such agreement, such contracting party shall, in addition to its liability for excess profit determined on contracts or subcontracts performed by it, be liable for any excess profit determined to be due the United States on the subcontract entered into with such subcontractor. In such event, however, the excess profit to be paid to the United States in respect of the subcontract entered into with such subcontractor shall be determined separately from any contracts or subcontracts performed by the contracting party entering into the subcontract with such subcontractor.

§ 17.13 *Evasion of excess profit.* Section 3 of the act provides that the contracting party shall agree to make no subdivisions of any contract or subcontract for the same article or articles for the purpose of evading the provisions of the act. If any such subdivision or subcontract is made it shall constitute a violation of the agreement provided for in the act, and the cost of completing a contract or subcontract by a contracting party which violates such agreement shall be determined in a manner necessary clearly to reflect the true excess profit of such contracting party.

§ 17.14 *Books of account and records.* (a) It is recognized that no uniform method of accounting can be prescribed for all contracting parties subject to the provisions of the act. Each contracting party is required by law to make a report of its true profit and excess profit. Such party must, therefore, maintain such accounting records as will enable it to do so. See § 17.9. Among the essentials are the following:

(1) The profit or loss upon a particular contract or subcontract shall be accounted for and fully explained in the books of account separately on each contract or subcontract.

(2) Any cost accounting methods, however standard they may be and regardless of long continued practice, shall be controlled by, and be in accord with, the objectives and purposes of the act and of any regulations prescribed thereunder.

(3) The accounts shall clearly disclose the nature and amount of the different items of cost of performing a contract or subcontract.

(b) In cases where it has been the custom priorly to use so-called ''normal'' rates of overhead expense or administrative expenses, or ''standard'' or ''normal'' prices of material or labor charges, no objection will be made to the use temporarily during the period of performing the contract or subcontract of such methods in charging the

contract or subcontract, if the method of accounting employed is such as clearly to reflect, in the final determination upon the books of account, the actual profit derived from the performance of the contract or subcontract and if the necessary adjusting entries are entered upon the books and they explain in full detail the revisions necessary to accord with the facts. As to the elements of cost, see §17.9.

(c) All books, records, and original evidences of costs (including, for example, production orders, bills or schedules of materials, purchase requisitions, purchase orders, vouchers, requisitions for materials, standing expense orders, inventories, labor time cards, payrolls, cost distribution sheets) pertinent to the determination of the true profit, excess profit, deficiency in profit, or net loss from the performance of a contract or subcontract shall be kept at all times available for inspection by internal revenue officers, and shall be carefully preserved and retained so long as the contents thereof may become material in the administration of the act. This provision is not confined to books, records and original evidences pertaining to items which may be considered to be a part of the cost of performing a contract or subcontract. It is applicable to all books, records and original evidences of costs of each plant, branch or department involved in the performance of a contract or subcontract or in the distribution of costs to the contract or subcontract.

§17.15 *Report to Secretary of the Navy.* (a) Upon the completion of a contract or a subcontract coming within the scope of the act and this part, the contracting party is required to make a report, under oath, to the Secretary of the Navy. As to the date of completion of a contract or subcontract, see §17.5. The act requires that such report shall be in the form prescribed by the Secretary of the Navy and shall state the total contract price, the cost of performing the contract, the net income from such contract, and the per centum such income bears to the contract price. The contracting party shall also include as a part of such report a statement showing:

(1) The manner in which the indirect costs were determined and allocated to the cost of performing the contract or subcontract (see §17.9);

(2) The name and address of every subcontractor with whom a subcontract was made, the object of such subcontract, the date when completed and the amount thereof; and

(3) The name and address of each affiliate or other organization, trade or business owned or controlled directly or indirectly by the same interests as those who so own or control the contracting party, together with a statement showing in detail all transactions which were made with such affiliate or other organization, trade or business and are pertinent to the determination of the excess profit.

(b) A copy of the report required to be made to the Secretary of the Navy is required to be transmitted by the contracting party to the Secretary of the Treasury. Such copy shall not be transmitted directly to the Secretary of the Treasury but shall be filed as a part of the annual report. See §17.16.

§17.16 *Annual reports for income-taxable years*—(a) *General requirements.* Every contracting party completing a contract or subcontract within the contracting party's income-taxable year ending after April 3, 1939 shall file, with the district director of internal revenue for the internal revenue district in which the contracting party's Federal income tax return is required to be filed, annual reports on the prescribed forms of the profit and excess profit on all contracts and subcontracts coming within the scope of the act. If any contracts or subcontracts so completed by the contracting party were entered into for the construction or manufacture of any complete naval vessel or any portion thereof, the profit and excess profit on all such contracts and subcontracts completed within the income-taxable year ending after April 3, 1939 shall be computed in accordance with the provisions of §17.6. If any contracts or subcontracts so completed by the contracting party were entered into for the construction or manufacture of any complete naval aircraft or any portion thereof, the profit and excess profit on all such contracts and subcontracts completed within the income-taxable year ending after April 3, 1939 shall be computed in accordance with the provisions of §17.7. There shall be included as a part of the annual report a statement, preferably in columnar form, showing separately for each contract or subcontract completed by the contracting party within the income-taxable year and covered by the report, the total contract price, the cost of performing the contract or subcontract and resulting profit or loss on each contract or subcontract together with a summary statement showing in detail the computation of the net profit or net loss upon each group of contracts and subcontracts covered by the report and the amount of the excess profit, if any, with respect to each group of contracts and subcontracts covered by the report. A copy of the report made to the Secretary of the Navy (see §17.15) with respect to each contract or subcontract covered in the annual report, shall be filed as a part of such annual report. In case the income-taxable year of the contracting party is a period of less than twelve months (see §17.1), the reports required by this section shall be made for such period and not for a full year.

(b) *Time for filing annual reports.* Annual reports of contracts and subcontracts completed by a contracting party within an income-taxable year ending after April 3, 1939

shall be filed on or before the 15th day of the ninth month following the close of the contracting party's income-taxable year. It is important that the contracting party render on or before the due date annual reports as nearly complete and final as it is possible for the contracting party to prepare. An extension of time granted the contracting party for filing its Federal income tax return does not serve to extend the time for filing the annual reports required by this section. Authority consistent with authorizations for granting extensions of time for filing Federal income tax returns is hereby delegated to the various district directors of internal revenue for granting extensions of time for filing the reports required by this section. Application for extensions of time for filing such reports should be addressed to the district director of internal revenue for the district in which the contracting party files its Federal income tax returns and must contain a full recital of the causes for the delay.

§ 17.17 *Payment of excess profit liability.* The amount of the excess profit liability to be paid to the United States shall be paid on or before the due date for filing the report with the district director of internal revenue. See § 17.16. At the option of the contracting party, the amount of the excess profit liability may be paid in four equal installments instead of in a single payment, in which case the first installment is to be paid on or before the date prescribed for the payment of the excess profit as a single payment, the second installment on or before the 15th day of the third month, the third installment on or before the 15th day of the sixth month, and the fourth installment on or before the 15th day of the ninth month, after such date.

§ 17.18 *Liability of surety.* The surety under contracts entered into after the amendment of section 3(b) of the act of June 25, 1936 shall not be liable for payment of excess profit due the United States in respect of such contracts.

§ 17.19 *Determination of liability for excess profit, interest and penalties; assessment, collection, payment, refunds.* (a) The duty of determining the correct amount of excess profit liability on contracts and subcontracts coming within the scope of the act is upon the Commissioner of Internal Revenue. Under section 3(b) of the act, as amended, and section 651 of the Internal Revenue Code, all provisions of law (including the provisions of law relating to interest, penalties and refunds) applicable with respect to the taxes imposed by Title I of the Revenue Act of 1934 and not inconsistent with section 3 of the act are applicable with respect to the assessment, collection, or payment of excess profits on contracts and subcontracts coming within the scope of the act and to refunds of overpayments of profits into the Treasury under the act. Claims by a contracting party for the refund of an amount of excess profit, interest, penalties, and additions to such excess profit shall conform to the general requirements prescribed with respect to claims for refund of overpayments of taxes imposed by Title I of the Revenue Act of 1934 and, if filed on account of any additional costs incurred pursuant to guarantee provisions in a contract, shall be supplemented by a statement under oath showing the amount and nature of such costs and all facts pertinent thereto.

(b) Administrative procedure for the determination, assessment and collection of excess profit liability under section 3 of the act, sections 650 and 651 of the Internal Revenue Code, and this part, and the examination of reports and claims in connection therewith will be prescribed from time to time by the Commissioner of Internal Revenue.

MITIGATION OF EFFECT OF RENEGOTIATION OF GOVERNMENT CONTRACTS

§ 1.1481–1 [Reserved]

Tax on Transfers To Avoid Income Tax

§ 1.1491–1 Imposition of tax.

Section 1491 imposes an excise tax upon transfers of stock or securities by a citizen or resident of the United States, or by a domestic corporation or partnership, or by a trust which is not a foreign trust, to a foreign corporation as paid-in surplus or as a contribution to capital, or to a foreign trust, or to a foreign partnership. The tax is in an amount equal to 27½ percent of the excess of (a) the value of the stock or securities so transferred over (b) its adjusted basis, as provided in section 1011, for determining gain in the hands of the transferor.

[T.D. 6500, 25 FR 12082, Nov. 26, 1960]

§ 1.1492–1 Nontaxable transfers.

(a) The tax imposed by section 1491 does not apply:

(1) If the transferee is an organization (other than an organization described in section 401(a) exempt from income tax under the provisions of sections 501 to 504, inclusive; or

(2) If before the transfer it has been established to the satisfaction of the Commissioner that the transfer is not in pursuance of a plan having as one of

its principal purposes the avoidance of Federal income taxes.

(b) Whether a transfer of stock or securities is in pursuance of a plan having as one of its principal purposes the avoidance of Federal income taxes is a question to be determined from the facts and circumstances of each particular case. In any such case where a transferor desires to establish that the transfer is not in pursuance of such a plan, a statement of the facts relating to the plan under which the transfer is to be made or was made, together with a copy of the plan if in writing, shall be forwarded to the Commissioner of Internal Revenue, Washington, DC 20225, for a ruling. This statement shall contain, or be verified by, a written declaration that it is made under the penalties of perjury. A letter notifying the transferor of the Commissioner's determination will be mailed to the transferor.

[T.D. 6500, 25 FR 12082, Nov. 26, 1960]

§ 1.1493–1 Definition of foreign trust.

For taxable years beginning before January 1, 1967, a trust is to be considered a ''foreign trust'' within the meaning of chapter 5 of the Code, if, assuming a subsequent sale by the trustee, outside the United States and for cash, of the property transferred to the trust, the profit, if any, from such sale (being income from sources without the United States under the provisions of part I (section 861 and following), subchapter N, chapter 1 of the Code), would not be included in the gross income of the trust under subtitle A of the Code. For taxable years beginning after December 31, 1966, the term ''foreign trust,'' as used in chapter 5 of the Code, shall have the meaning prescribed by section 7701(a)(31).

[T.D. 7332, 39 FR 44230, Dec. 23, 1974]

§ 1.1494–1 Returns; payment and collection of tax.

(a) *Returns and payment.* Every person making a transfer described in section 1491 shall make a return to the district director on the day on which the transfer is made and, unless the transfer is nontaxable under section 1492, pay the tax due on such transfer. This return, which shall contain, or be verified by, a written declaration that it is made under the penalties of perjury, shall be made on Form 926 and shall be filed with the district director to whom the transferor's return of income is required to be made. The return shall set forth in detail the following information:

(1) Name and address of transferor, and place of organization or creation, if a corporation, partnership, or trust.

(2) Name and address of transferee, place of organization or creation, and whether the transferee is a foreign corporation, a foreign trust, or a foreign partnership. If the transferee is a foreign trust or a foreign partnership, the name and address of the fiduciary and each beneficiary, in the case of a trust, or of each partner, in the case of a partnership, must be shown.

(3) Description and amount of stock or securities transferred, the date of transfer, and a complete statement showing all the facts relating to the transfer, accompanied by a copy of the plan under which the transfer was made.

(4) The fair market value of the stock or securities transferred as of the date of transfer, and the adjusted basis provided in section 1011 for determining gain in the hands of the transferor.

(5) Whether the transfer was made in pursuance of a plan submitted to and approved by the Commissioner as not having as one of its principal purposes the avoidance of Federal income taxes. If the plan has been so approved, a copy of the Commissioner's letter approving the plan shall accompany the return.

(6) Such other information as may be required by the return form.

(b) *Certificate.* (1) If the transferee of the stock or securities, the transfer of which is reported in the return, is a foreign organization meeting the tests of exemption from income tax provided in part I (section 501 and following), subchapter F, chapter 1 of the Code, and the transferor on that account claims that no liability for tax is imposed by section 1491, such transferor must file with Form 926 a certificate establishing the exemption of the transferee under such part I. This certificate, which shall contain, or be verified by, a written declaration that

it is made under the penalties of perjury, shall contain complete information showing the character of the transferee, the purpose for which it was organized, its actual activities, the source of its income and the disposition of such income, whether or not any of its income is credited to surplus or may inure to the benefit of any private shareholder or individual, and in general all facts relating to its operations which affect its right to exemption. To such certificate shall be attached a copy of the charter or articles of incorporation, the by-laws of the organization, and the latest financial statement showing the assets, liabilities, receipts, and disbursements of the organization.

(2) If the transferee is a foreign organization which has been held to be exempt from income tax under such part I (or corresponding provisions of prior law), a copy of the Commissioner's letter so holding shall be filed with Form 926 in lieu of the above certificate and attachments.

(c) *Assessment and collection.* The determination, assessment, and collection of the tax and the examination of returns and claims filed pursuant to chapter 5 of the Code will be made under such procedure as may be prescribed from time to time by the Commissioner.

[T.D. 6500, 25 FR 12082, Nov. 26, 1960]

§ 1.1494–2 Effective date.

Chapter 5 (section 1491 and following) of the Internal Revenue Code of 1954 and the regulations prescribed thereunder apply with respect to transfers occurring after December 31, 1954. (See section 7851(a)(1)(B).) Chapter 7 (section 1250 and following) of the Internal Revenue Code of 1939 and the regulations applicable thereto apply with respect to transfers occurring prior to January 1, 1955.

[T.D. 6500, 25 FR 12083, Nov. 26, 1960]

Consolidated Returns

RETURNS AND PAYMENT OF TAX

CONSOLIDATED RETURN REGULATIONS

§ 1.1502–0 Effective dates.

(a) The regulations under section 1502 are applicable to taxable years beginning after December 31, 1965, except as otherwise provided therein.

(b) The provisions of §§ 1.1502–0A through 1.1502–3A, 1.1502–10A through 1.1502–19A, and 1.1502–30A through 1.1502–51A (as contained in the 26 CFR part 1 edition revised April 1, 1996) are applicable to taxable years beginning before January 1, 1966.

[T.D. 8677, 61 FR 33325, June 27, 1996]

§ 1.1502–1 Definitions.

(a) *Group.* The term *group* means an affiliated group of corporations as defined in section 1504. See § 1.1502–75(d) as to when a group remains in existence. Except as the context otherwise requires, references to a group are references to a consolidated group (as defined in paragraph (h) of this section).

(b) *Member.* The term *member* means a corporation (including the common parent) that is included in the group, or as the context may require, a corporation that is included in a subgroup.

(c) *Subsidiary.* The term *subsidiary* means a corporation other than the common parent which is a member of such group.

(d) *Consolidated return year.* The term *consolidated return year* means a taxable year for which a consolidated return is filed or required to be filed by such group.

(e) *Separate return year.* The term *separate return year* means a taxable year of a corporation for which it files a separate return or for which it joins in the filing of a consolidated return by another group.

(f) *Separate return limitation year*—(1) *In general.* Except as provided in paragraphs (f)(2) and (3) of this section, the term *separate return limitation year* (or

SRLY) means any separate return year of a member or of a predecessor of a member.

(2) *Exceptions*. The term *separate return limitation year* (or *SRLY*) does not include:

(i) A separate return year of the corporation which is the common parent for the consolidated return year to which the tax attribute is to be carried (except as provided in §1.1502–75(d)(2)(ii) and subparagraph (3) of this paragraph),

(ii) A separate return year of any corporation which was a member of the group for each day of such year, or

(iii) A separate return year of a predecessor of any member if such predecessor was a member of the group for each day of such year,

Provided that an election under section 1562(a) (relating to the privilege to elect multiple surtax exemptions) was never effective (or is no longer effective as a result of a termination of such election) for such year. An election under section 1562(a) which is effective for a taxable year beginning in 1963 and ending in 1964 shall be disregarded.

(3) *Reverse acquisitions*. In the event of an acquisition to which §1.1502–75(d)(3) applies, all taxable years of the first corporation and of each of its subsidiaries ending on or before the date of the acquisition shall be treated as separate return limitation years, and the separate return years (if any) of the second corporation and each of its subsidiaries shall not be treated as separate return limitation years (unless they were so treated immediately before the acquisition). For example, if corporation P merges into corporation T, and the persons who were stockholders of P immediately before the merger, as a result of owning the stock of P, own more than 50 percent of the fair market value of the outstanding stock of T, then a loss incurred before the merger by T (even though it is the common parent), or by a subsidiary of T, is treated as having been incurred in a separate return limitation year. Conversely, a loss incurred before the merger by P, or by a subsidiary of P in a separate return year during all of which such subsidiary was a member of the group of which P was the common parent and for which section 1562 was not effective, is treated as having been incurred in a year which is not a separate return limitation year.

(4) *Predecessor and successors*. The term *predecessor* means a transferor or distributor of assets to a member (the successor) in a transaction—

(i) To which section 381(a) applies; or

(ii) That occurs on or after January 1, 1997, in which the successor's basis for the assets is determined, directly or indirectly, in whole or in part, by reference to the basis of the assets of the transferor or distributor, but in the case of a transaction that occurs before June 25, 1999, only if the amount by which basis differs from value, in the aggregate, is material. For a transaction that occurs before June 25, 1999, only one member may be considered a predecessor to or a successor of one other member.

(g) *Consolidated return change of ownership*—(1) *In general*. A consolidated return change of ownership occurs during any taxable year (referred to in this subparagraph as the ''year of change'') of the corporation which is the common parent for the taxable year to which the tax attribute is to be carried, if, at the end of the year of change:

(i) Any one or more of the persons described in section 382(a)(2) own a percentage of the fair market value of the outstanding stock of such corporation which is more than 50 percentage points greater than such person or persons owned at:

(a) The beginning of such taxable year, or

(b) The beginning of the preceding taxable year, and

(ii) The increase in percentage points at the end of such year is attributable to:

(a) A purchase (within the meaning of section 382(a)(4)) by such person or persons of such stock, the stock of another corporation owning stock in such corporation, or an interest in a partnership or trust owning stock in such corporation, or

(b) A decrease in the amount of such stock outstanding or the amount of stock outstanding of another corporation owning stock in such corporation,

except a decrease resulting from a redemption to pay death taxes to which section 303 applies.

For purposes of subdivision (i) *(a)* and *(b)* of this subparagraph, the beginning of the taxable years specified therein shall be the beginning of such taxable years or October 1, 1965, whichever occurs later.

(2) *Operating rules*. For purposes of this paragraph:

(i) The term *stock* means all shares except nonvoting stock which is limited and preferred as to dividends, and

(ii) Section 318 (relating to constructive ownership of stock) shall apply in determining the ownership of stock, except that section 318(a) (2)(C) and (3)(C) shall be applied without regard to the 50-percent limitation contained therein.

(3) *Old members*. The term *old members* of a group means:

(i) Those corporations which were members of such group immediately preceding the first day of the taxable year in which the consolidated return change of ownership occurs, or

(ii) If the group was not in existence prior to the taxable year in which the consolidated return change of ownership occurs, the corporation which is the common parent for the taxable year to which the tax attribute is to be carried.

(4) *Reverse acquisitions*. If there has been a consolidated return change of ownership of a corporation under subparagraph (1) of this paragraph and the stock or assets of such corporation are subsequently acquired by another corporation in an acquisition to which §1.1502–75(d)(3) applies so that the group of which the former corporation is the common parent is treated as continuing in existence, then the ''old members'', as defined in subparagraph (3) of this paragraph, of such group immediately before the acquisition shall continue to be treated as ''old members'' immediately after the acquisition. For example, assume that corporations P and S comprise group PS, and PS undergoes a consolidated return change of ownership. Subsequently, the stock of P, the common parent, is acquired by corporation T, the common parent of group TU, in an acquisition to which section 368(a)(1)(B) and §1.1502–75(d)(3) apply. The PS group is treated as continuing in existence with T as the common parent. P and S continue to be treated as old members, as defined in subparagraph (3) of this paragraph.

(h) *Consolidated group*. The term ''consolidated group'' means a group filing (or required to file) consolidated returns for the tax year.

(i) [Reserved]

(j) *Affiliated*. Corporations are affiliated if they are members of a group with each other.

[T.D. 6894, 31 FR 11794, Sept. 8, 1966, as amended by T.D. 7246, 38 FR 758, Jan. 4, 1973; T.D. 8294, 55 FR 9434, Mar. 14, 1990; T.D. 8319, 55 FR 49038, Nov. 26, 1990; T.D. 8560, 59 FR 41675, Aug. 15, 1994; T.D. 8677, 61 FR 33325, June 27, 1996; T.D. 8823, 64 FR 36101, July 2, 1999]

CONSOLIDATED TAX LIABILITY

§ 1.1502–2 Computation of tax liability.

The tax liability of a group for a consolidated return year shall be determined by adding together:

(a) The tax imposed by section 11 on the consolidated taxable income for such year (see §1.1502–11 for the computation of consolidated taxable income);

(b) The tax imposed by section 541 on the consolidated undistributed personal holding company income;

(c) If paragraph (b) of this section does not apply, the aggregate of the taxes imposed by section 541 on the separate undistributed personal holding company income of the members which are personal holding companies;

(d) If paragraph (b) of this section does not apply, the tax imposed by section 531 on the consolidated accumulated taxable income (see §1.1502–43);

(e) The tax imposed by section 594(a) in lieu of the taxes imposed by section 11 or 1201 on the taxable income of a life insurance department of the common parent of a group which is a mutual savings bank;

(f) The tax imposed by section 802(a) on consolidated life insurance company taxable income;

(g) The tax imposed by section 831(a) on the consolidated insurance company taxable income of the members which are subject to such tax;

(h) The tax imposed by section 1201, instead of the taxes computed under paragraphs (a) and (g) of this section, computed by reference to the net capital gain of the group (see § 1.1502–22) (or, for consolidated return years to which § 1.1502–22 does not apply, computed by reference to the excess of the consolidated net long-term capital gain over the consolidated net short-term capital loss (see § 1.1502–41A for the determination of the consolidated net long-term capital gain and the consolidated net short-term capital loss));

(i) [Reserved]

(j) The tax imposed by section 1333 on war loss recoveries; and

by allowing as a credit against such taxes the investment credit under section 38 (see § 1.1502–3), and the foreign tax credit under section 33 (see § 1.1502–4). For purposes of this section, the surtax exemption of the group for a consolidated return year is $25,000, or if a lesser amount is allowed under section 1561, such lesser amount. See § 1.1561–2(a)(2). For increase in tax due to the application of section 47, see § 1.1502–3(f). For amount of tax surcharge, see section 51 and § 1.1502–7.

[T.D. 6894, 31 FR 11794, Sept. 8, 1966, as amended by T.D. 7093, 36 FR 4871, Mar. 13, 1971; T.D. 7937, 49 FR 3462, Jan. 27, 1984; T.D. 8677, 61 FR 33326, June 27, 1996; T.D. 8823, 64 FR 36099, July 2, 1999]

§ 1.1502–3 Consolidated tax credits.

(a) *Determination of amount of consolidated credit*—(1) *In general*. The credit allowed by section 38 for a consolidated return year of a group shall be equal to the consolidated credit earned. The consolidated credit earned is equal to the aggregate of the credit earned (as determined under subparagraph (2) of this paragraph) by all members of the group for the consolidated return year.

(2) *Determination of credit earned*. The credit earned of a member is an amount equal to 7 percent of such member's qualified investment (determined under section 46(c)). For purposes of computing a member's qualified investment, the basis of property shall not include any gain or loss realized with respect to such property by another member in an intercompany transaction (as defined in § 1.1502–13(b)), whether or not such gain or loss is deferred. Thus, if section 38 property acquired in an intercompany transaction has a basis of $100 to the purchasing member, and if the selling member has a $20 gain with respect to such property, the basis of such property for purposes of computing the purchaser's qualified investment is only $80. Such $80 basis shall also be used for purposes of applying section 47 to such property. See paragraph (f) of this section.

(3) *Consolidated limitation based on amount of tax*. (i) Notwithstanding the amount of the consolidated credit earned for the taxable year, the consolidated credit allowed by section 38 to the group for the consolidated return year is limited to:

(a) So much of the consolidated liability for tax as does not exceed $25,000, plus

(b) For taxable years ending on or before March 9, 1967, 25 percent of the consolidated liability for tax in excess of $25,000, or

(c) For taxable years ending after March 9, 1967, 50 percent of the consolidated liability for tax in excess of $25,000.

The $25,000 amount referred to in the preceding sentence shall be reduced by any part of such $25,000 amount apportioned under § 1.46–1 to component members of the controlled group (as defined in section 46(a)(5)) which do not join in the filing of the consolidated return. For further rules for computing the limitation based on amount of tax with respect to the suspension period (as defined in section 48(j)), see section 46(a)(2). The amount determined under this subparagraph is referred to in this section as the ''consolidated limitation based on amount of tax.''

(ii) If an organization to which section 593 applies or a cooperative organization described in section 1381(a) joins in the filing of the consolidated return, the $25,000 amount referred to in subdivision (i) of this subparagraph (reduced as provided in such subdivision) shall be apportioned equally among the members of the group filing the consolidated return. The amount so apportioned equally to any such organization shall then be decreased in accordance with the provisions of section 46(d). Finally, the sum of all such equal portions (as decreased under section

46(d)) of each member of the group shall be substituted for the $25,000 amount referred to in subdivision (i) of this subparagraph.

(4) *Consolidated liability for tax.* For purposes of subparagraph (3) of this paragraph, the consolidated liability for tax shall be the income tax imposed for the taxable year upon the group by chapter 1 of the Code, reduced by the consolidated foreign tax credit allowable under § 1.1502–4. The tax imposed by section 56 (relating to minimum tax for tax preferences), section 531 (relating to accumulated earnings tax), section 541 (relating to personal holding company tax), and any additional tax imposed by section 1351(d)(1) (relating to recoveries of foreign expropriation losses), shall not be considered tax imposed by chapter 1 of the Code. In addition, any increase in tax resulting from the application of section 47 (relating to certain dispositions, etc., of section 38 property) shall not be treated as tax imposed by chapter 1 for purposes of computing the consolidated liability for tax.

(b) *Carryback and carryover of unused credits*—(1) *Allowance of unused credit as consolidated carryback or carryover.* A group shall be allowed to add to the amount allowable as a credit under paragraph (a)(1) of this section for any consolidated return year an amount equal to the aggregate of the consolidated investment credit carryovers and carrybacks to such year. The consolidated investment credit carryovers and carrybacks to the taxable year shall consist of any consolidated unused credits of the group, plus any unused credits of members of the group arising in separate return years of such members, which may be carried over or back to the taxable year under the principles of section 46(b). However, such consolidated carryovers and carrybacks shall not include any consolidated unused credits apportioned to a corporation for a separate return year pursuant to paragraph (c) of § 1.1502–79 and shall be subject to the limitations contained in paragraphs (c) and (e) of this section. A consolidated unused credit for any consolidated return year is the excess of the consolidated credit earned over the consolidated limitation based on amount of tax for such year.

(2) *Absorption rules.* For purposes of determining the amount, if any, of an unused credit (whether consolidated or separate) which can be carried to a taxable year (consolidated or separate), the amount of such unused credit which is absorbed in a prior consolidated return year under section 46(b) shall be determined by:

(i) Applying all unused credits which can be carried to such prior year in the order of the taxable years in which such unused credits arose, beginning with the taxable year which ends earliest, and

(ii) Applying all such unused credits which can be carried to such prior year from taxable years ending on the same date on a pro rata basis.

(3) *Example.* The provisions of paragraphs (a) and (b) of this section may be illustrated by the following example:

Example. (i) Corporation P is incorporated on January 1, 1966. On that same day P incorporates corporation S, a wholly owned subsidiary. P and S file consolidated returns for calendar years 1966 and 1967. P's and S's credit earned, the consolidated credit earned, and the consolidated limitation based on amount of tax for 1966 and 1967 are as follows:

	Credit earned	Consolidated credit earned	Consolidated limitation based on amount of tax
1966:			
P	$60,000		
S	$30,000	$90,000	$100,000
1967:			
P	$40,000		
S	$25,000	$65,000	$50,000

(ii) P's and S's credit earned for 1966 are aggregated, and the group's consolidated credit earned, $90,000, is allowable in full to the group as a credit under section 38 for 1966

since such amount is less than the consolidated limitation based on amount of tax for 1966, $100,000.

(iii) Since the consolidated limitation based on amount of tax for 1967 is $50,000, only $50,000 of the $65,000 consolidated credit earned for such year is allowable to the group under section 38 as a credit for 1967. The consolidated unused credit for 1967 of $15,000 ($65,000 less $50,000) is a consolidated investment credit carryback and carryover to the years prescribed in section 46(b). In this case the consolidated unused credit is a consolidated investment credit carryback to 1966 (since P and S were not in existence in 1964 and 1965) and a consolidated investment credit carryover to 1968 and subsequent years. The portion of the consolidated unused credit for 1967 which is allowable as a credit for 1966 is $10,000. This amount shall be added to the amount allowable as a credit to the group for 1966. The balance of the consolidated unused credit for 1967 to be carried to 1968 is $5,000. These amounts are computed as follows:

Consolidated carryback to 1966			$15,000
1966 consolidated limitation based on tax		$100,000	
Less: Consolidated credit earned for 1966	$90,000		
Consolidated unused credits attributable to years preceding 1967	0	$90,000	
Limit on amount of 1967 consolidated unused credit which may be added as a credit for 1966			$10,000
Balance of 1967 consolidated unused credit to be carried to 1968			$5,000

(c) *Limitation on investment credit carryovers and carrybacks from separate return limitation years applicable for consolidated return years for which the due date of the return is on or before March 13, 1998*—(1)*General rule*. In the case of an unused credit of a member of the group arising in a separate return limitation year (as defined in § 1.1502–1(f)) of such member (and in a separate return limitation year of any predecessor of such member), the amount which may be included under paragraph (b) of this section (computed without regard to the limitation contained in paragraph (e) of this section) shall not exceed the amount determined under paragraph (c)(2) of this section.

(2) *Computation of limitation*. The amount referred to in paragraph (c)(1) of this section with respect to a member of the group is the excess, if any, of—

(i) The limitation based on amount of tax of the group, minus such limitation recomputed by excluding the items of income, deduction, and foreign tax credit of such member; over

(ii) The sum of the investment credit earned by such member for such consolidated return year, and the unused credits attributable to such member which may be carried to such consolidated return year arising in unused credit years ending prior to the particular separate return limitation year.

(3) *Special effective date*. This paragraph (c) applies to consolidated return years for which the due date of the income tax return (without extensions) is on or before March 13, 1998. See paragraph (d) of this section for the rule that limits the group's use of a section 38 credit carryover or carryback from a SRLY for a consolidated return year for which the due date of the income tax return (without extensions) is after March 13, 1998. See also paragraph (d)(4) of this section for an optional effective date rule (generally making the rules of this paragraph (c) inapplicable to a consolidated return year beginning after December 31, 1996, if the due date of the income tax return (without extensions) for such year is on or before March 13, 1998).

(4) *Examples*. The provisions of this paragraph (c) may be illustrated by the following examples:

Example 1. (i) Assume the same facts as in the example contained in paragraph (b)(3) of this section, except that all the stock of corporation T, also a calendar year taxpayer, is acquired by P on January 1, 1968, and that P, S, and T file a consolidated return for 1968. In 1966, T had an unused credit of $10,000

which has not been absorbed and is available as an investment credit carryover to 1968. Such carryover is from a separate return limitation year. P's and S's credit earned for 1968 is $10,000 each, and T's credit earned is $8,000; the consolidated credit earned is therefore $28,000. The group's consolidated limitation based on amount of tax for 1968 is $50,000. Such limitation recomputed by excluding the items of income, deduction, and foreign tax credit of T is $30,000. Thus, the amount determined under paragraph (c)(2)(i) of this section is $20,000 ($50,000 minus $30,000). Accordingly, the limitation on the carryover of T's unused credit is $12,000, the excess of $20,000 over $8,000 (the sum of T's credit earned for the taxable year and any carryovers from prior unused credit years (none in this case)). Therefore T's $10,000 unused credit from 1966 may be carried over to the consolidated return year without limitation.

(ii) The group's consolidated credit earned for 1968, $28,000, is allowable in full as a credit under section 38 since such amount is less than the consolidated limitation based on amount of tax, $50,000.

(iii) The group's consolidated investment credit carryover to 1968 is $15,000, consisting of the consolidated unused credits of the group ($5,000) plus T's separate return year unused credit ($10,000). The entire $15,000 consolidated carryover shall be added to the amount allowable to the group as a credit under section 38 for 1968, since such amount is less than $22,000 (the excess of the consolidated limitation based on tax, $50,000, over the sum of the consolidated credit earned for 1968, $28,000, and unused credits arising in prior unused credit years, zero).

Example 2. Assume the same facts as in *Example 1*, except that the amount determined under paragraph (c)(2)(i) of this section is $12,000. Therefore, the limitation on the carryover of T's unused credit is $4,000. Accordingly, the consolidated investment credit carryover is only $9,000 since the amount of T's separate return year unused credit which may be added to the group's $ 5,000 consolidated unused credit is $4,000. These amounts are computed as follows:

T's carryover to 1968	.....	.....	$10,000
Consolidated limitation based on amount of tax minus recomputed limitation	.....	$12,000	.....
Less: T's credit earned for 1968	$8,000	.....	.....
Unused credits attributable to T arising in unused credit years preceding 1966	0	$8,000	.....
Limit on amount of 1966 unused credit of T which may be added to consolidated investment credit carryover	.....	.....	$4,000
Balance of 1966 unused credit of T to be carried to 1969 (subject to the limitation contained in paragraph (c) of this section)	.....	.....	$6,000

(d) *Limitation on tax credit carryovers and carrybacks from separate return limitation years applicable for consolidated return years for which the due date of the return is after March 13, 1998*—(1) *General rule*. The aggregate of a member's unused section 38 credits arising in SRLYs that are included in the consolidated section 38 credits for all consolidated return years of the group may not exceed—

(i) The aggregate for all consolidated return years of the member's contributions to the consolidated section 38(c) limitation for each consolidated return year; reduced by

(ii) The aggregate of the member's section 38 credits arising and absorbed in all consolidated return years (whether or not absorbed by the member).

(2) *Computational rules*—(i) *Member's contribution to the consolidated section 38(c) limitation*. If the consolidated section 38(c) limitation for a consolidated return year is determined by reference to the consolidated tentative minimum tax (see section 38(c)(1)(A)), then a member's contribution to the consolidated section 38(c) limitation for such year equals the member's share of the consolidated net income tax minus the member's share of the consolidated tentative minimum tax. If the consolidated section 38(c) limitation for a consolidated return year is determined by

reference to the consolidated net regular tax liability (see section 38(c)(1)(B)), then a member's contribution to the consolidated section 38(c) limitation for such year equals the member's share of the consolidated net income tax minus 25 percent of the quantity which is equal to so much of the member's share of the consolidated net regular tax liability less its portion of the $25,000 amount specified in section 38(c)(1)(B). The group computes the member's shares by applying to the respective consolidated amounts the principles of section 1552 and the percentage method under §1.1502–33(d)(3), assuming a 100% allocation of any decreased tax liability. The group must make proper adjustments so that taxes and credits not taken into account in computing the limitation under section 38(c) are not taken into account in computing the member's share of the consolidated net income tax, etc. (See, for example, the taxes described in section 26(b) that are disregarded in computing regular tax liability.) Also, the group may apportion all or a part of the $25,000 amount (or lesser amount if reduced by section 38(c)(3)) for any year to one or more members.

(ii) *Years included in computation.* For purposes of computing the limitation under this paragraph (d), the consolidated return years of the group include only those years, including the year to which a credit is carried, that the member has been continuously included in the group's consolidated return, but exclude—

(A) For carryovers, any years ending after the year to which the credit is carried; and

(B) For carrybacks, any years ending after the year in which the credit arose.

(iii) *Subgroups and successors.* The SRLY subgroup principles under §1.1502–21(c)(2) apply for purposes of this paragraph (d). The predecessor and successor principles under §1.1502–21(f) also apply for purposes of this paragraph (d).

(iv) *Overlap with section 383.* The principles under §1.1502–21(g) apply for purposes of this paragraph (d). For example, an overlap of paragraph (d) of this section and the application of section 383 with respect to a credit carryover occurs if a corporation becomes a member of a consolidated group (the SRLY event) within six months of the change date of an ownership change giving rise to a section 383 credit limitation with respect to that carryover (the section 383 event), with the result that the limitation of this paragraph (d) does not apply. See §§1.1502–21(g)(2)(ii)(A) and 1.383–1; see also §1.1502–21(g)(4) (subgroup rules).

(3) *Effective date*—(i) *In general.* This paragraph (d) generally applies to consolidated return years for which the due date of the income tax return (without extensions) is after March 13, 1998.

(A) *Contribution years.* Except as provided in paragraph (d)(4)(ii) of this section, a group does not take into account a consolidated taxable year for which the due date of the income tax return (without extensions) is on or before March 13, 1998, in determining a member's (or subgroup's) contributions to the consolidated section 38(c) limitation under this paragraph (d).

(B) *Special subgroup rule.* In the event that the principles of §1.1502–21(g)(1) do not apply to a particular credit carryover in the current group, then solely for purposes of applying paragraph (d) of this section to determine the limitation with respect to that carryover and with respect to which the SRLY register (the aggregate of the member's or subgroup's contribution to consolidated section 38(c) limitation reduced by the aggregate of the member's or subgroup's section 38 credits arising and absorbed in all consolidated return years) began in a taxable year for which the due date of the return is on or before May 25, 2000, the principles of §1.1502–21(c)(2) shall be applied without regard to the phrase ''or for a carryover that was subject to the overlap rule described in paragraph (g) of this section or §1.1502–15(g) with respect to another group (the former group).''

(ii) *Overlap rule.* Paragraph (d)(2)(iv) of this section (relating to overlap with section 383) applies to taxable years for which the due date (without extensions) of the consolidated return is after May 25, 2000. For purposes of paragraph (d)(2)(iv) of this section,

only an ownership change to which section 383, as amended by the Tax Reform Act of 1986 (100 Stat. 2085), applies and which results in a section 383 credit limitation shall constitute a section 383 event.

(4) *Optional effective date of January 1, 1997.* (i) For consolidated taxable years beginning on or after January 1, 1997, for which the due date of the income tax return (without extensions) is on or before March 13, 1998, in lieu of paragraphs (c) and (e)(3) of this section (relating to the general business credit), §1.1502–4(f)(3) and (g)(3) (relating to the foreign tax credit), the next to last sentence of §1.1502–9A(a)(2), §1.1502–9A(b)(1)(v) (relating to overall foreign losses), and §1.1502–55(h)(4)(iii) (relating to the alternative minimum tax credit), a consolidated group may apply the corresponding provisions as they appear in 1998–1 C.B. 655 through 661 (see §601.601(d)(2) of this chapter) (treating references in such corresponding provisions to §§1.1502–9(b)(1)(ii), (iii), and (iv) as references to §§1.1502–9A(b)(1)(ii), (iii), and (iv)). Also, in the case of a consolidated return change of ownership that occurs on or after January 1, 1997, in a taxable year for which the due date of the income tax return (without extensions) is on or before March 13, 1998, a consolidated group may choose not to apply paragraph (e) of this section and §1.1502–4(g) to taxable years ending after December 31, 1996. A consolidated group making the choices described in the two preceding sentences generally must apply all such corresponding provisions (including not applying paragraph (e) of this section and §1.1502–4(g)) for all relevant years. However, a consolidated group making the election provided in §1.1502–9A(b)(1)(vi) (electing not to apply §1.1502–9A(b)(1)(v) to years beginning before January 1, 1998) may nevertheless choose to apply all such corresponding provisions referred to in this paragraph (d)(4)(i) other than the provision corresponding to §1.1502–9A(b)(1)(v) for all relevant years.

(ii) If a consolidated group chooses to apply the corresponding provisions referred to in paragraph (d)(4)(i) of this section, the consolidated group shall not take into account a consolidated taxable year beginning before January 1, 1997, in determining a member's (or subgroup's) contributions to the consolidated section 38(c) limitation under this paragraph (d).

(5) *Example.* The following example illustrates the provisions of this paragraph (d):

Example. (i) Individual A owns all of the stock of P and T. P is the common parent of the P group. P acquires all the stock of T at the beginning of Year 2. T carries over an unused section 38 general business credit from Year 1 of $100,000. The table in paragraph (i) of this Example shows the group's net consolidated income tax, consolidated tentative minimum tax, and consolidated net regular tax liabilities, and T's share of such taxes computed under the principles of section 1552 and the percentage method under §1.1502–33(d)(3), assuming a 100% allocation of any decreased tax liability, for Year 2. (The effects of the lower section 11 brackets are ignored, there are no other tax credits affecting a group amount or member's share, and $1,000s are omitted.)

Year 2	Group	P's share of col. 1	T's share of col. 1
1. consolidated taxable income	$2,000	$1,200	$800
2. consolidated net regular tax	$700	$420	$280
3. consolidated alternative minimum taxable income	$4,000	$3,200	$800
4. consolidated tentative minimum tax	$800	$640	$160
5. consolidated net income tax	$800	$520	$280
6. greater of line 4 or 25% of (line 2 minus $25,000) for the group	$800		
7. consolidated §38(c) limitation (line 5 minus line 6)	$0		

(ii) T's Year 1 is a SRLY with respect to the P group. See §1.1502–1(f)(2)(ii). T did not undergo an ownership change giving rise to a section 383 credit limitation within 6 months of joining the P group. Thus, T's $100,000 general business credit arising in Year 1 is subject to a SRLY limitation in the P group. The amount of T's unused section 38 credits from Year 1 that are included in the consolidated section 38 credits for Year 2 may not exceed T's contribution to the consolidated section 38(c) limitation. For Year 2, the group determines the consolidated section 38(c) limitation by reference to consolidated tentative minimum tax for Year 2. Therefore, T's contribution to the consolidated section 38(c) limitation for Year 2 equals its share of consolidated net income tax minus its share of consolidated tentative minimum tax. T's contribution is $280,000 minus $160,000, or $120,000. However, because the

group has a consolidated section 38 limitation of zero, it may not include any of T's unused section 38 credits in the consolidated section 38 credits for Year 2.

(iii) The following table shows similar information for the group for Year 3:

Year 3	Group	P's share of col. 1	T's share of col. 1
1. consolidated taxable income	$1,200	$1,500	$(300)
2. consolidated net regular tax	$420	$525	$(105)
3. consolidated alternative minimum taxable income	$1,500	$1,700	$(200)
4. consolidated tentative minimum tax	$300	$340	$(40)
5. consolidated net income tax	$420	$525	$(105)
6. greater of line 4 or 25% of (line 2 minus $25,000) for the group	$300		
7. consolidated §38(c) limitation (line 5 minus line 6)	$120		

(iv) The amount of T's unused section 38 credits from Year 1 that are included in the consolidated section 38 credits for Year 3 may not exceed T's aggregate contribution to the consolidated section 38(c) limitation

for Years 2 and 3. For Year 3, the group determines the consolidated section 38(c) limitation by reference to the consolidated tentative minimum tax for Year 3. Therefore, T's contribution to the consolidated section 38(c) limitation for Year 3 equals its share of consolidated net income tax minus its share of consolidated tentative minimum tax. Applying the principles of section 1552 and §1.1502–33(d) (taking into account, for example, that T's positive earnings and profits adjustment under §1.1502–33(d) reflects its losses actually absorbed by the group), T's contribution is $(105,000) minus $(40,000), or $(65,000). T's aggregate contribution to the consolidated section 38(c) limitation for Years 2 and 3 is $120,000 + $(65,000), or $55,000. The group may include $55,000 of T's Year 1 unused section 38 credits in its consolidated section 38 tax credit in Year 3.

(e) *Limitation on investment credit carryovers where there has been a consolidated return change of ownership*— (1) *General rule*. If a consolidated return change of ownership (as defined in paragraph (g) of §1.1502–1) occurs during the taxable year or an earlier taxable year, the amount which may be included under paragraph (b) of this section in the consolidated investment credit carryovers to the taxable year with respect to the aggregate unused credits attributable to old members of the group (as defined in paragraph (g)(3) of §1.1502–1) arising in taxable years (consolidated or separate) ending on the same day and before the taxable year in which the consolidated return change of ownership occurred shall not exceed the amount determined under subparagraph (2) of this paragraph.

(2) *Computation of limitation*. The amount referred to in subparagraph (1) of this paragraph shall be the excess of the consolidated limitation based on the amount of tax for the taxable year, recomputed by including only the items of income, deduction, and foreign tax credit of the old members, over the sum of:

(i) The aggregate investment credits earned by the old members for the taxable year, and

(ii) The aggregate unused investment credits attributable to the old members which may be carried to the taxable year arising in unused credit years ending prior to the particular unused credit year or years.

(3) *Special effective date*. This paragraph (e) applies only to a consolidated return change of ownership that occurred during a consolidated return year for which the due date of the income tax return (without extensions) is on or before March 13, 1998. See paragraph (d)(4) of this section for an optional effective date rule (generally making the rules of this paragraph (e) also inapplicable if the consolidated return change of ownership occurred on or after January 1, 1997, and during a consolidated return year for which the due date of the income tax return (without extensions) is on or before March 13, 1998).

(f) *Early dispositions, etc., of section 38 property*—(1) *Dispositions of section 38 property during and after consolidated return year*. If property is subject to section 47(a) (1) or (2) with respect to a member during a consolidated return year, any increase in tax shall be added to the tax liability of the group under §1.1502–2 (regardless of whether the property was placed in service in a consolidated or separate return year). Also, if property is subject to section 47(a) (1) or (2) with respect to a corporation during a taxable year for which such corporation files on a separate return basis, any increase in tax shall be added to the tax liability of such corporation (regardless of whether such property was placed in service in a consolidated or separate return year).

(2) *Exception for transfer to another member*. (i) Except as provided in subdivisions (ii) and (iii) of this subparagraph, a transfer of section 38 property from one member of the group to another member of such group during a consolidated return year shall not be treated as a disposition or cessation within the meaning of section 47(a)(1). If such section 38 property is disposed of, or otherwise ceases to be section 38 property or becomes public utility property with respect to the transferee, before the close of the estimated useful life which was taken into account in computing qualified investment, then section 47(a) (1) or (2) shall apply to the transferee with respect to such property (determined by taking into account the period of use, qualified investment, other dispositions, etc., of the transferor). Any increase in tax due to the application of section 47(a) (1) or (2) shall be added to the tax liability of

such transferee (or the tax liability of a group, if the transferee joins in the filing of a consolidated return).

(ii) Except as provided in subdivision (iii) of this subparagraph, if section 38 property is disposed of during a consolidated return year by one member of the group to another member of such group which is an organization to which section 593 applies or a cooperative organization described in section 1381(a), the tax under chapter 1 of the Code for such consolidated return year shall be increased by an amount equal to the aggregate decrease in the credits allowed under section 38 for all prior taxable years which would result solely from treating such property, for purposes of determining qualified investment, as placed in service by such organization to which section 593 applies or such cooperative organization described in section 1381(a), as the case may be, but with due regard to the use of the property before such transfer.

(iii) Section 47(a)(1) shall apply to a transfer of section 38 property by a corporation during a consolidated return year if such corporation is liquidated in a transaction to which section 334(b)(2) applies.

(3) *Examples*. The provisions of this paragraph may be illustrated by the following examples:

Example (1). P, S, and T file a consolidated return for calendar year 1967. In such year S places in service section 38 property having an estimated useful life of more than 8 years. In 1968, P, S, and T file a consolidated return and in such year S sells such property to T. Such sale will not cause section 47(a)(1) to apply.

Example (2). Assume the same facts as in example (1), except that P, S, and T filed separate returns for 1967. The sale from S to T will not cause section 47(a)(1) to apply.

Example (3). Assume the same facts as in example (1), except that P, S, and T continue to file consolidated returns through 1971 and in such year T disposes of the property to individual A. Section 47(a)(1) will apply to the group and any increase in tax shall be added to the tax liability of the group. For the purposes of determining the actual period of use by T, such period shall include S's period of use.

Example (4). Assume the same facts as in example (3), except that T files a separate return in 1971. Again, the actual periods of use by S and T will be combined in applying section 47. If the disposition results in an increase in tax under section 47(a)(1), such additional tax shall be added to the separate tax liability of T.

Example (5). Assume the same facts as in example (1), except that in 1969, P sells all the stock of T to a third party. Such sale will not cause section 47(a)(1) to apply.

[T.D. 6894, 31 FR 11794, Sept. 8, 1966, as amended by T.D. 7246, 38 FR 758, Jan. 4, 1973; T.D. 8597, 60 FR 36679, July 18, 1995; T.D. 8751, 63 FR 1742, Jan. 12, 1998; T.D. 8766, 63 FR 12642, Mar. 16, 1998; T.D. 8884, 65 FR 33754, May 25, 2000; 65 FR 48379, Aug. 8, 2000; 65 FR 50281, Aug. 17, 2000]

§ 1.1502–4 Consolidated foreign tax credit.

(a) *In general*. The credit under section 901 for taxes paid or accrued to any foreign country or possession of the United States shall be allowed to the group only if the common parent corporation chooses to use such credit in the computation of the tax liability of the group for the consolidated return year. If this choice is made, no deduction may be taken on the consolidated return for such taxes paid or accrued by any member of the group. See section 275(a)(4).

(b) *Limitation effective under section 904(a) for the group*—(1) *Common parent's limitation effective for group*. The determination of whether the overall limitation or the per-country limitation applies for a consolidated return year shall be made by reference to the limitation effective with respect to the common parent corporation for such year. If the limitation effective with respect to a member for its immediately preceding separate return year differs from the limitation effective with respect to the common parent corporation for the consolidated return year, then such member shall, if the overall limitation is effective with respect to the common parent, be deemed to have made an election to use such overall limitation, or, if the per-country limitation is effective with respect to the common parent, be deemed to have revoked its election to use the overall limitation. Consent of the Secretary or his delegate (if otherwise required) is hereby given to such member for such election or revocation. Any such election or revocation shall apply only prospectively beginning with such consolidated return year.

(2) *Limitation effective for subsequent years*. The limitation effective with respect to a member for the last year for which it joins in the filing of a consolidated return with a group shall remain in effect for a subsequent separate return year and may be changed by such corporation for such subsequent year only in accordance with the provisions of section 904(b) (and this paragraph if it joins in the filing of a consolidated return with another group). Any retroactive change in the limitation by the common parent corporation for such member's last consolidated return year shall change the election effective with respect to such member for such last period. Thus, if the common parent (P) elects the overall limitation with respect to calendar year 1966, such election would be effective with respect to its subsidiary S for 1966. If S leaves the group at the beginning of calendar year 1967, such election shall be effective for 1967 with respect to S (unless S revokes such election for 1967 or a subsequent year in accordance with section 904(b), or this paragraph if it joins in the filing of a consolidated return with another group). However, if P retroactively changes back to the per-country limitation with respect to 1966, such limitation would be effective with respect to S for 1966 and subsequent years (unless S elects the overall limitation for any such subsequent year).

(c) *Computation of consolidated foreign tax credit*. The foreign tax credit for the consolidated return year shall be determined on a consolidated basis under the principles of sections 901 through 905 and section 960. For example, if the per-country limitations applies to the consolidated return year, taxes paid or accrued for such year (including those deemed paid or accrued under sections 902 and 960(a) and paragraph (e) of this section) to each foreign country or possession by the members of the group shall be aggregated. If the overall limitation applies, taxes paid or accrued for such year (including those deemed paid or accrued) to all foreign countries and possessions by members of the group shall be aggregated. If the overall limitation applies and a member of the group qualifies as a Western Hemisphere trade corporation, see section 1503(b).

(d) *Computation of limitation on credit*. For purposes of computing the group's applicable limitation under section 904(a), the following rules shall apply:

(1) *Computation of taxable income from foreign sources*. The numerator of the applicable limiting fraction under section 904(a) shall be an amount (not in excess of the amount determined under subparagraph (2) of this paragraph) equal to the aggregate of the separate taxable incomes of the members from sources within each foreign country or possession of the United States (if the per-country limitation is applicable), or from sources without the United States (if the overall limitation is applicable), determined under § 1.1502–12, adjusted for the following items taken into account in the computation of consolidated taxable income:

(i) The portion of the consolidated net operating loss deduction, the consolidated charitable contributions deduction, the consolidated dividends received deduction, and the consolidated section 922 deduction, attributable to such foreign source income;

(ii) Any such foreign source capital gain net income (net capital gain for taxable years beginning before January 1, 1977) (determined without regard to any net capital loss carryover or carryback);

(iii) Any such foreign source net capital loss and section 1231 net loss, reduced by the portion of the consolidated net capital loss attributable to such foreign source loss; and

(iv) The portion of any consolidated net capital loss carryover or carryback attributable to such foreign source income which is absorbed in the taxable year.

(2) *Computation of entire taxable income*. The denominator of the applicable limiting fraction under section 904(a) (that is, the entire taxable income of the group) shall be the consolidated taxable income of the group computed in accordance with § 1.1502–11.

(3) *Computation of tax against which credit is taken*. The tax against which the limiting fraction under section 904(a) is applied shall be the consolidated tax liability of the group determined under § 1.1502–2, but without regard to paragraphs (b), (c), (d), and (j)

thereof, and without regard to any credit against such liability.

(e) *Carryover and carryback of unused foreign tax*—(1) *Allowance of unused foreign tax as consolidated carryover or carryback.* The aggregate of the consolidated unused foreign tax carryovers and carrybacks to the taxable year, to the extent absorbed for such year under the principles of section 904(d), shall be deemed to be paid or accrued to a foreign country or possession for such year. The consolidated unused foreign tax carryovers and carrybacks to the taxable year shall consist of any consolidated unused foreign tax, plus any unused foreign tax of members for separate return years of such members, which may be carried over or back to the taxable year under the principles of section 904 (d) and (e). However, such consolidated carryovers and carrybacks shall not include any consolidated unused foreign taxes apportioned to a corporation for a separate return year pursuant to §1.1502–79(d) and shall be subject to the limitations contained in paragraphs (f) and (g) of this section. A consolidated unused foreign tax is the excess of the foreign taxes paid or accrued by the group (or deemed paid or accrued by the group, other than by reason of section 904(d) over the applicable limitation for the consolidated return year.

(2) *Absorption rules.* For purposes of determining the amount, if any, of an unused foreign tax (consolidated or separate) which can be carried to a taxable year (consolidated or separate), the amount of such unused tax which is absorbed in a prior consolidated return year under section 904(d) shall be determined by:

(i) Applying all unused foreign taxes which can be carried to such prior year in the order of the taxable years in which such unused taxes arose, beginning with the taxable year which ends earliest, and

(ii) Applying all such unused taxes which can be carried to such prior year from taxable years ending on the same date on a pro rata basis.

(f) *Limitation on unused foreign tax carryover or carryback from separate return limitation years*—(1) General rule. In the case of an unused foreign tax of a member of the group arising in a separate return limitation year (as defined in paragraph (f) of §1.1502–1) of such member, the amount which may be included under paragraph (e) of this section (computed without regard to the limitation contained in paragraph (g) of this section) shall not exceed the amount determined under subparagraph (2) of this paragraph.

(2) *Computation of limitation.* The amount referred to in subparagraph (1) of this paragraph with respect to a member of the group is the excess, if any, of:

(i) The section 904(a) limitation of the group, minus such limitation recomputed by excluding the items of income and deduction of such member, over

(ii) The sum of *(a)* the foreign taxes paid (or deemed paid, other than by reason of section 904(d)) by such member for the consolidated return year, and *(b)* the unused foreign tax attributable to such member which may be carried to such consolidated return year arising in taxable years ending prior to the particular separate return limitation year.

(3) *Limitation on unused foreign tax credit carryover or carryback from separate return limitation years.* Paragraphs (f)(1) and (2) of this section do not apply for consolidated return years for which the due date of the income tax return (without extensions) is after March 13, 1998. For consolidated return years for which the due date of the income tax return (without extensions) is after March 13, 1998, a group shall include an unused foreign tax of a member arising in a SRLY without regard to the contribution of the member to consolidated tax liability for the consolidated return year. See also §1.1502–3(d)(4) for an optional effective date rule (generally making the rules of paragraphs (f)(1) and (2) of this section also inapplicable to a consolidated return year beginning on or after January 1, 1997, if the due date of the income tax return (without extensions) for such year is on or before March 13, 1998).

(g) *Limitation on unused foreign tax carryover where there has been a consolidated return change of ownership*—(1) *General rule.* If a consolidated return change of ownership (as defined in

paragraph (g) of § 1.1502–1) occurs during the taxable year or an earlier taxable year, the amount which may be included under paragraph (e) of this section in the consolidated unused foreign tax carryovers to the taxable year with respect to the aggregate unused credits attributable to the old members of the group (as defined in paragraph (g)(3) of § 1.1502–1) arising in taxable years (consolidated or separate) ending on the same day and before the taxable year in which the consolidated return change of ownership occurred shall not exceed the amount determined under subparagraph (2) of this paragraph.

(2) *Computation of limitation*. The amount referred to in subparagraph (1) of this paragraph shall be the excess of the section 904(a) limitation of the group for the taxable year, recomputed by including only the items of income and deduction of the old members of the group, over the sum of:

(i) The aggregate foreign taxes paid (or deemed paid, other than by reason of section 904(d)) by the old members for the taxable year, and

(ii) The aggregate unused foreign tax attributable to the old members which can be carried to the taxable year arising in taxable years ending prior to the particular unused foreign tax year or years.

(3) *Special effective date for CRCO limitation*. Paragraphs (g)(1) and (2) of this section apply only to a consolidated return change of ownership that occurred during a consolidated return year for which the due date of the income tax return (without extensions) is on or before March 13, 1998. See also § 1.1502–3(d)(4) for an optional effective date rule (generally making the rules of paragraph (g)(1) and (2) of this section also inapplicable if the consolidated return change of ownership occurred on or after January 1, 1997, and during a consolidated return year for which the due date of the income tax return (without extensions) is on or before March 13, 1998).

(h) *Amount of credit with respect to interest income*. If any member of the group has interest income described in section 904(f)(2) (for a year for which it filed on a consolidated or separate basis), the group's foreign tax credit with respect to such interest shall be computed separately in accordance with the principles of section 904(f) and this section.

(i) [Reserved]

(j) *Examples*. The provisions of this section may be illustrated by the following examples:

Example (1). Domestic corporation P is incorporated on January 1, 1966. On that same day it also incorporates domestic corporations S and T, wholly owned subsidiaries. P, S, and T file consolidated returns for 1966 and 1967 on the basis of a calendar year. T engages in business solely in country A. S transacts business solely in countries A and B. P does business solely in the United States. During 1966 T sold an item of inventory to P at a profit of $2,000. Under § 1.1502–13 (as contained in the 26 CFR part 1 edition revised as of April 1, 1995) such profit is deferred and none of the circumstances of restoration contained in paragraph (d), (e), or (f) of § 1.1502–13 have occurred as of the close of 1966. The taxable income for 1966 from foreign and United States sources, and the foreign taxes paid on such foreign income are as follows:

Corporation	U.S. taxable income	Country A		Country B		Total taxable income
		Taxable income	Foreign tax paid	Taxable income	Foreign tax paid	
P	$40,000					$40,000
T		$20,000	$12,000			20,000
S		10,000	6,000	$10,000	$3,000	20,000
						$80,000

Such taxable income was computed by taking into account the rules provided in § 1.1502–12. Thus, the $2,000 deferred profit is not included in T's taxable income for 1966 (but will be included for the taxable year for which one of the events specified in paragraph (d), (e), or (f) of § 1.1502–13 occurs). The consolidated taxable income of the group (computed in accordance with § 1.1502–11) is $80,000. The consolidated tax liability against which the credit may be taken (computed in accordance with paragraph (d)(3) of this section) is $31,900.

(i) Assuming P chooses to use the foreign taxes paid as a credit and the group is subject to the per-country limitation, the group may take as a credit against the consolidated tax liability $11,962.50 of the amount paid to country A, plus the $3,000 paid to country B. Such amounts are computed as follows: The aggregate taxes paid to country A of $18,000 is limited to $11,962.50 ($31,900 times $30,000/$80,000). The unused foreign tax with respect to country A is $6,037.50 ($18,000 less $11,962.50), and is a consolidated unused foreign tax which shall be carried to the years prescribed by section 904(d). A credit of $3,000 is available with respect to the taxes paid to country B since such amount is less than the limitation of $3,987.50 ($31,900 times $10,000/$80,000).

(ii) Assuming the overall limitation is in effect for the taxable year, the group may take $15,950 as a credit, computed as follows: The aggregate taxes paid to all foreign countries of $21,000 is limited to $15,950 ($31,900 times $40,000/$80,000). The unused foreign tax is $5,050 ($21,000 less $15,950), and is a consolidated unused foreign tax which shall be carried to the years prescribed by section 904(d).

Example (2). Assume the same facts as in example (1), except that T has a $10,000 long-term capital gain (derived from a sale to a nonmember in country A) and P has a $10,000 long-term capital loss (derived from a sale to a nonmember in the United States). Notwithstanding that the consolidated net capital gain (capital gain net income for taxable years beginning after December 31, 1976) of the group is zero, T's capital gain shall be reflected in full in the computation of taxable income from foreign sources.

Example (3). Assume the same facts as in example (1), except that the group had a consolidated section 172 deduction of $8,000 which is attributable to a net operating loss sustained by T. The $8,000 consolidated net operating loss deduction is offset against T's income from country A, thus reducing T's taxable income from country A to $12,000.

[T.D. 6894, 31 FR 11794, Sept. 8, 1966, as amended by T.D. 7728, 45 FR 72650, Nov. 3, 1980; T.D. 8597, 60 FR 36679, July 18, 1995; T.D. 8766, 63 FR 12642, Mar. 16, 1998; T.D. 8884, 65 FR 33758, May 25, 2000]

§ 1.1502–5 Estimated tax.

(a) *General rule*—(1) *Consolidated estimated tax.* If a group files a consolidated return for two consecutive taxable years, it must make payments of estimated tax on a consolidated basis for each subsequent taxable year, until such time as separate returns are properly filed. Until such time, the group is treated as a single corporation for purposes of section 6154 (relating to payment of estimated tax by corporations). If separate returns are filed by the members for a taxable year, the amount of any estimated tax payments made with respect to a consolidated payment of estimated tax for such year shall be credited against the separate tax liabilities of the members in any manner designated by the common parent which is satisfactory to the Commissioner. The consolidated payments of estimated tax shall be deposited with the authorized commercial dispositary or Federal Reserve Bank with which the common parent deposits its estimated tax payments. A statement should be attached to the payment setting forth the name, address, employer identification number, and internal revenue service center of each member.

(2) *First two consolidated return years.* For the first 2 years for which a group files a consolidated return, it may make payments of estimated tax on either a consolidated or separate basis. If a consolidated return is filed for such year, the amount of any estimated tax payments made for such year by any member shall be credited against the tax liability of the group.

(3) *Effective date.* This section applies to taxable years for which the due date (without extensions) for filing returns is after August 6, 1979. For prior taxable years see 26 CFR 1.1502–5 (Revised as of April 1, 1978).

(b) *Addition to tax for failure to pay estimated tax under section 6655*—(1) *Consolidated return filed.* For the first two taxable years for which a group files a consolidated return, the group may compute the amount of the penalty (if any) under section 6655 on a consolidated basis or separate member basis, regardless of the method of payment. Thereafter, for a taxable year for which the group files a consolidated return, the group must compute the penalty on a consolidated basis.

(2) *Computation of penalty on consolidated basis.* (i) This paragraph (b)(2) gives the rules for computing the penalty under section 6655 on a consolidated basis.

(ii) The tax and facts shown on the return for the preceding taxable year referred to in section 6655(d) (1) and (2) are, if a consolidated return was filed

for that preceding year, such items shown on the consolidated return for that preceding year or, if one was not filed for that preceding year, the aggregate taxes and the facts shown on the separate returns of the common parent and any other corporation that was a member of the same affiliated group as the common parent for that preceding year.

(iii) If estimated tax was not paid on a consolidated basis, then the amount of the group's payments of estimated tax for the taxable year is the aggregate of the payments made by all members for the year.

(iv) Section 6655(d)(1) applies only if the common parent's consolidated return, or each member's separate return, for the preceding taxable year (as the case may be) was a taxable year of 12 months.

(3) *Computation of penalty on separate member basis.* To compute any penalty under section 6655 on a separate member basis, for purposes of section 6655(b)(1), the ''tax shown on the return for the taxable year'' is the portion of the tax shown on the consolidated return allocable to the member under paragraph (b)(5) of this section. If the member was included in the consolidated return filed by the group for the preceding taxable year then:

(i) For purposes of section 6655(d)(1), the ''tax shown on the return'' for any member shall be the portion of the tax shown on the consolidated return for the preceding year allocable to the member under paragraph (b)(5) of this section.

(ii) For purposes of section 6655(d)(2), the ''facts shown on the return'' shall be the facts shown on the consolidated return for the preceding year and the tax computed under that section shall be allocated under the rules of paragraph (b)(5) of this section.

(4) *Consolidated payments if separate returns filed.* If the group does not file a consolidated return for the taxable year, but makes payments of estimated tax on a consolidated basis, for purposes of section 6655(b)(2), the ''amount, if any of the installment paid'' by any member is an amount apportioned to the member in a manner designated by the common parent that is satisfactory to the Commissioner. If the member was included in the consolidated return filed by the group for the preceding taxable year, the amount of a member's penalty under section 6655 is computed on the separate member basis described in paragraph (b)(3)(i) and (ii) of this section.

(5) *Rules for allocation of consolidated tax liability.* For purposes of subparagraphs (1) and (2) of this paragraph, the tax shown on a consolidated return shall be allocated to the members of the group under the method which the group has elected pursuant to section 1552 and 1.1502–33(d)(2).

(c) *Examples.* The provisions of this section may be illustrated by the following examples:

Example (1). Corporations P and S–1 file a consolidated return for the first time for calendar year 1978. P and S–1 also file consolidated returns for 1979 and 1980. For 1978 and 1979, P and S–1 may make payments of estimated tax on either a separate or consolidated basis. For 1980, however, the group must pay its estimated tax on a consolidated basis. In determining whether P and S–1 come within the exception provided in section 6655(d)(1) for 1980, the ''tax shown on the return'' is the tax shown on the consolidated return for 1979.

Example (2). Assume the same facts as in example (1). Assume further that corporation S–2 was a member of the group during 1979, and joins in the filing of the consolidated return for such year but ceases to be a member of the group on September 15, 1980. In determining whether the group (which no longer includes S–2) comes within the exception provided in section 6655(d)(1) for 1980, the ''tax shown on the return'' is the tax shown on the consolidated return for 1979.

Example (3). Assume the same facts as in example (1). Assume further that corporation S–2 becomes a member of the group on July 1, 1980, and joins in the filing of the consolidated return for 1968. In determining whether the group (which now includes S–2) comes within the exception provided in section 6655(d)(1) for 1980, the ''tax shown on the return'' is the tax shown on the consolidated return for 1979. Any tax of S–2 for any separate return year is not included as a part of the ''tax shown on the return'' for purposes of applying section 6655(d)(1).

Example (4). Corporations X and Y filed consolidated returns for the calendar years 1977 and 1978 and separate returns for 1979. In determining whether X and Y comes within the exception provided in section 6655(d)(1) for 1979, the ''tax shown on the return'' is the amount of tax shown on the consolidated return for 1978 allocable to X and Y in accordance with paragraph (b)(5) of this section.

(d) *Cross reference.* For provisions relating to quick refunds of corporate estimated tax payments, see § 1.1502–78, and §§ 1.6425–1 through 1.6425–3.

[T.D. 6894, 31 FR 11794, Sept. 8, 1966, as amended by T.D. 7059, 35 FR 14549, Sept. 17, 1970; T.D. 7637, 44 FR 46840, Aug. 9, 1979; 62 FR 23657, May 1, 1997]

§ 1.1502–6 Liability for tax.

(a) *Several liability of members of group.* Except as provided in paragraph (b) of this section, the common parent corporation and each subsidiary which was a member of the group during any part of the consolidated return year shall be severally liable for the tax for such year computed in accordance with the regulations under section 1502 prescribed on or before the due date (not including extensions of time) for the filing of the consolidated return for such year.

(b) *Liability of subsidiary after withdrawal.* If a subsidiary has ceased to be a member of the group and in such cessation resulted from a bona fide sale or exchange of its stock for fair value and occurred prior to the date upon which any deficiency is assessed, the district director may, if he believes that the assessment or collection of the balance of the deficiency will not be jeopardized, make assessment and collection of such deficiency from such former subsidiary in an amount not exceeding the portion of such deficiency which the district director may determine to be allocable to it. If the district director makes assessment and collection of any part of a deficiency from such former subsidiary, then for purposes of any credit or refund of the amount collected from such former subsidiary the agency of the common parent under the provisions of § 1.1502–77 shall not apply.

(c) *Effect of intercompany agreements.* No agreement entered into by one or more members of the group with any other member of such group or with any other person shall in any case have the effect of reducing the liability prescribed under this section.

[T.D. 6894, 31 FR 11794, Sept. 8, 1966]

§ 1.1502–9 Consolidated overall foreign losses and separate limitation losses.

(a) *In general.* This section provides rules for applying section 904(f) (including its definitions and nomenclature) to a group and its members. Generally, section 904(f) concerns rules relating to overall foreign losses (OFLs) and separate limitation losses (SLLs) and the consequences of such losses. As provided in section 904(f)(5), losses are computed separately in each category of income described in section 904(d)(1) (basket). Paragraph (b) of this section defines terms and provides computational and accounting rules, including rules regarding recapture. Paragraph (c) of this section provides rules that apply to OFLs and SLLs when a member becomes or ceases to be a member of a group. Paragraph (d) of this section provides a predecessor and successor rule. Paragraph (e) of this section provides effective dates.

(b) *Consolidated application of section 904(f).* A group applies section 904(f) for a consolidated return year in accordance with that section, subject to the following rules:

(1) *Computation of CSLI or CSLL and consolidated U.S. source income or loss.* The group computes its consolidated separate limitation income (CSLI) or consolidated separate limitation loss (CSLL) for each basket under the principles of § 1.1502–11 by aggregating each member's foreign-source taxable income or loss in such basket computed under the principles of § 1.1502–12, and taking into account the foreign portion of the consolidated items described in § 1.1502–11(a)(2) through (8) for such basket. The group computes its consolidated U.S.-source taxable income or loss under similar principles.

(2) *Netting CSLLs, CSLIs, and consolidated U.S. source taxable income or loss.* The group applies section 904(f)(5) to determine the extent to which a CSLL for a basket reduces CSLI for another basket or consolidated U.S.-source taxable income.

(3) *CSLL and COFL accounts.* To the extent provided in section 904(f), the amount by which a CSLL for a basket (the loss basket) reduces CSLI for another basket (the income basket) shall result in the creation of (or addition

to) a CSLL account for the loss basket with respect to the income basket. Likewise, the amount by which a CSLL for a loss basket reduces consolidated U.S.-source income will create (or add to) a consolidated overall foreign loss account (a COFL account).

(4) *Recapture of COFL and CSLL accounts.* In the case of a COFL account for a loss basket, section 904(f)(1) and (3) recharacterizes some or all of the foreign-source income in the loss basket as U.S.-source income. In the case of a CSLL account for a loss basket with respect to an income basket, section 904(f)(5)(C) and (F) recharacterizes some or all of the foreign-source income in the loss basket as foreign-source income in the income basket. The COFL account or CSLL account is reduced to the extent amounts are recharacterized with respect to such account.

(5) *Intercompany transactions*—(i) *Non-application of section 904(f) disposition rules.* Neither section 904(f)(3) (in the case of a COFL account) nor (5)(F) (in the case of a CSLL account) applies at the time of a disposition that is an intercompany transaction to which §1.1502–13 applies. Instead, section 904(f)(3) and (5)(F) applies only at such time and only to the extent that the group is required under §1.1502–13 (without regard to section 904(f)(3) and (5)(F)) to take into account any intercompany items resulting from the disposition, based on the COFL or CSLL account existing at the end of the consolidated return year during which the group takes the intercompany items into account.

(ii) *Example.* Paragraph (b)(5)(i) of this section is illustrated by the following examples. The identity of the parties and the basic assumptions set forth in §1.1502–13(c)(7)(i) apply to the examples. Except as otherwise stated, assume further that the consolidated group recognizes no foreign-source income other than as a result of the transactions described. The examples are as follows:

Example 1. (i) On June 10, Year 1, S transfers nondepreciable property with a basis of $100 and a fair market value of $250 to B in a transaction to which section 351 applies. The property was predominantly used without the United States in a trade or business, within the meaning of section 904(f)(3). B continues to use the property without the United States. The group has a COFL account in the relevant loss basket of $120 as of December 31, Year 1.

(ii) Because the contribution from S to B is an intercompany transaction, section 904(f)(3) does not apply to result in any gain recognition in Year 1. See paragraph (b)(5)(i) of this section.

(iii) On January 10, Year 4, B ceases to be a member of the group. Because S did not recognize gain in Year 1 under section 351, no gain is taken into account in Year 4 under §1.1502–13(d). Thus, no portion of the group's COFL account is recaptured in Year 4. For rules requiring apportionment of a portion of the COFL account to B, see paragraph (c)(2) of this section.

Example 2. (i) The facts are the same as in paragraph (i) of *Example 1.* On January 10, Year 4, B sells the property to X for $300. As of December 31, Year 4, the group's COFL account is $40. (The COFL account was reduced between Year 1 and Year 4 due to unrelated foreign-source income taken into account by the group.)

(ii) B takes into account gain of $200 in Year 4. The $40 COFL account in Year 4 recharacterizes $40 of the gain as U.S. source. See section 904(f)(3).

Example 3. (i) On June 10, Year 1, S sells nondepreciable property with a basis of $100 and a fair market value of $250 to B for $250 cash. The property was predominantly used without the United States in a trade or business, within the meaning of section 904(f)(3). The group has a COFL account in the relevant loss basket of $120 as of December 31, Year 1. B predominately uses the property in a trade or business without the United States.

(ii) Because the sale is an intercompany transaction, section 904(f)(3) does not require the group to take into account any gain in Year 1. Thus, under paragraph (b)(5)(i) of this section, the COFL account is not reduced in Year 1.

(iii) On January 10, Year 4, B sells the property to X for $300. As of December 31, Year 4, the group's COFL account is $60. (The COFL account was reduced between Year 1 and Year 4 due to unrelated foreign-source income taken into account by the group.)

(iv) In Year 4, S's $150 intercompany gain and B's $50 corresponding gain are taken into account to produce the same effect on consolidated taxable income as if S and B were divisions of a single corporation. See §1.1502–13(c). All of B's $50 corresponding gain is recharacterized under section 904(f)(3). If S and B were divisions of a single corporation and the intercompany sale were a transfer between the divisions, B would succeed to S's $100 basis in the property and would have $200 of gain ($60 of which would be recharacterized under section 904(f)(3)), instead of a $50 gain. Consequently, S's $150 intercompany gain and B's $50 corresponding gain are taken into account, and $10 of S's gain is recharacterized under section 904(f)(3) as U.S. source to reflect the $10 difference between B's $50 recharacterized gain and the $60 recomputed gain that would have been recharacterized.

(c) *Becoming or ceasing to be a member of a group*—(1) *Adding separate accounts on becoming a member.* At the time that a corporation becomes a member of a group (a new member), the group adds to the balance of its COFL or CSLL account the balance of the new member's corresponding OFL account or SLL account. A new member's OFL account corresponds to a COFL account if the account is for the same loss basket. A new member's SLL account corresponds to a CSLL account if the account is for the same loss basket and with respect to the same income basket. If the group does not have a COFL or CSLL account corresponding to the new member's account, it creates a COFL or CSLL account with a balance equal to the balance of the member's account.

(2) *Apportionment of consolidated account to departing member*—(i) *In general.* A group apportions to a member that ceases to be a member (a departing member) a portion of each COFL and CSLL account as of the end of the year during which the member ceases to be a member and after the group makes the additions or reductions to such account required under paragraphs (b)(3), (b)(4) and (c)(1) of this section (other than an addition under paragraph (c)(1) of this section attributable to a member becoming a member after the departing member ceases to be a member). The group computes such portion under paragraph (c)(2)(ii) of this section, as limited by paragraph (c)(2)(iii) of this section. The departing member carries such portion to its first separate return year after it ceases to be a member. Also, the group reduces each account by such portion and carries such reduced amount to its first consolidated return year beginning after the year in which the member ceases to be a member. If two or more members cease to be members in the same year, the group computes the portion allocable to each such member (and reduces its accounts by such portion) in the order that the members cease to be members.

(ii) *Departing member's portion of group's account.* A departing member's portion of a group's COFL or CSLL account for a loss basket is computed based upon the member's share of the group's assets that generate income subject to recapture at the time that the member ceases to be a member. Under the characterization principles of §§1.861–9T(g)(3) and 1.861–12T, the group identifies the assets of the departing member and the remaining members that generate foreign-source income (foreign assets) in each basket. The assets are characterized based upon the income that the assets are reasonably expected to generate after the member ceases to be a member. The member's portion of a group's COFL or CSLL account for a loss basket is the group's COFL or CSLL account, respectively, multiplied by a fraction, the numerator of which is the value of the member's foreign assets for the loss basket and the denominator of which is the value of the foreign assets of the group (including the departing member) for the loss basket. The value of the foreign assets is determined under the asset valuation rules of §1.861–9T(g)(1) and (2) using either tax book value or fair market value under the method chosen by the group for purposes of interest apportionment as provided in §1.861–9T(g)(1)(ii). For purposes of this paragraph (c)(2)(ii), §1.861–9T(g)(2)(iv) (assets in intercompany transactions) shall apply, but §1.861–9T(g)(2)(iii) (adjustments for directly allocated interest) shall not

apply. If the group uses the tax book value method, the member's portions of COFL and CSLL accounts are limited by paragraph (c)(2)(iii) of this section. In addition, for purposes of this paragraph (c)(2)(ii), the tax book value of assets transferred in intercompany transactions shall be determined without regard to previously deferred gain or loss that is taken into account by the group as a result of the transaction in which the member ceases to be a member. The assets should be valued at the time the member ceases to be a member, but values on other dates may be used unless this creates substantial distortions. For example, if a member ceases to be a member in the middle of the group's consolidated return year, an average of the values of assets at the beginning and end of the year (as provided in §1.861–9T(g)(2)) may be used or, if a member ceases to be a member in the early part of the group's consolidated return year, values at the beginning of the year may be used, unless this creates substantial distortions.

(iii) *Limitation on member's portion for groups using tax book value method.* If a group uses the tax book value method of valuing assets for purposes of paragraph (c)(2)(ii) of this section and the aggregate of a member's portions of COFL and CSLL accounts for a loss basket (with respect to one or more income baskets) determined under paragraph (c)(2)(ii) of this section exceeds 150 percent of the actual fair market value of the member's foreign assets in the loss basket, the member's portion of the COFL or CSLL accounts for the loss basket shall be reduced (proportionately, in the case of multiple accounts) by such excess. This rule does not apply if the departing member and all other members that cease to be members as part of the same transaction own all (or substantially all) the foreign assets in the loss basket.

(iv) *Determination of values of foreign assets binding on departing member.* The group's determination of the value of the member's and the group's foreign assets for a loss basket is binding on the member, unless the Commissioner concludes that the determination is not appropriate. The common parent of the group must attach a statement to the return for the taxable year that the departing member ceases to be a member of the group that sets forth the name and taxpayer identification number of the departing member, the amount of each COFL or CSLL for each loss basket that is apportioned to the departing member under this paragraph (c)(2), the method used to determine the value of the member's and the group's foreign assets in each such loss basket, and the value of the member's and the group's foreign assets in each such loss basket. The common parent must also furnish a copy of the statement to the departing member.

(v) *Anti-abuse rule.* If a corporation becomes a member and ceases to be a member, and a principal purpose of the corporation becoming and ceasing to be a member is to transfer the corporation's OFL account or SLL account to the group or to transfer the group's COFL or CSLL account to the corporation, appropriate adjustments will be made to eliminate the benefit of such a transfer of accounts. Similarly, if any member acquires assets or disposes of assets (including a transfer of assets between members of the group and the departing member) with a principal purpose of affecting the apportionment of accounts under paragraph (c)(2)(i) of this section, appropriate adjustments will be made to eliminate the benefit of such acquisition or disposition.

(vi) *Examples.* The following examples illustrate this paragraph (c):

Example 1. (i) On November 6, Year 1, S, a member of the P group, a consolidated group with a calendar consolidated return year, ceases to be a member of the group. On December 31, Year 1, the P group has a $40 COFL account for the general limitation basket, a $20 CSLL account for the general limitation basket (i.e., the loss basket) with respect to the passive basket (i.e., the income basket), and a $10 CSLL account for the shipping income basket (i.e., the loss basket) with respect to the passive basket (i.e., the income basket). No member of the group has foreign-source income or loss in Year 1. The group apportions its interest expense according to the tax book value method.

(ii) On November 6, Year 1, the group identifies S's assets and its own assets (including S's assets) expected to

produce foreign general limitation income. Use of end-of-the-year values will not create substantial distortions in determining the relative values of S's and the group's relevant assets on November 6, Year 1. The group determines that S's relevant assets have a tax book value of $2,000 and a fair market value of $2,200. Also, the group's relevant assets (including S's assets) have a tax book value of $8,000. On November 6, Year 1, S has no assets expected to produce foreign shipping income.

(iii) Under paragraph (c)(2)(ii) of this section, S takes a $10 COFL account for the general limitation basket ($40 × $2000/$8000) and a $5 CSLL account for the general limitation basket with respect to the passive basket ($20 × $2000/$8000). S does not take any portion of the shipping income basket CSLL account. The limitation described in paragraph (c)(2)(iii) of this section does not apply because the aggregate of the COFL and CSLL accounts for the general limitation basket that are apportioned to S ($15) is less than 150 percent of the actual fair market value of S's general limitation foreign assets ($2,200 × 150%).

Example 2. (i) Assume the same facts as in *Example 1*, except that the fair market value of S's general limitation foreign assets is $4 as of November 6, Year 1.

(ii) Under paragraph (c)(2)(iii) of this section, S's COFL and CSLL accounts for the general limitation basket must be reduced by $9, which is the excess of $15 (the aggregate amount of the accounts apportioned under paragraph (c)(2)(ii) of this section) over $6 (150 percent of the $4 actual fair market value of S's general limitation foreign assets). S thus takes a $4 COFL account for the general limitation basket ($10 − ($9 × $10/$15)) and a $2 CSLL account for the general limitation basket with respect to the passive basket ($5 − ($9 × $5/$15)).

(d) *Predecessor and successor*. A reference to a member includes, as the context may require, a reference to a predecessor or successor of the member. See § 1.1502–1(f).

(e) *Effective dates*. This section applies to consolidated return years for which the due date of the income tax return (without extensions) is after August 11, 1999. However, paragraph (b)(5) of this section (intercompany transactions) is not applicable for intercompany transactions that occur before January 28, 1999. A group applies the principles of § 1.1502–9A(e) to a disposition which is an intercompany transaction to which § 1.1502–13 applies and that occurs before January 28, 1999. Also, paragraph (c)(2) of this section (apportionment of consolidated account to departing member) is not applicable for members ceasing to be members of a group before January 28, 1999. A group applies the principles of § 1.1502–9A (rather than paragraph (c)(2) of this section) to determine the amount of a consolidated account that is apportioned to a member that ceases to be a member of the group before January 28, 1999 (and reduces its consolidated account by such apportioned amount) before applying paragraph (c)(2) of this section to members that cease to be members on or after January 28, 1999.

[T.D. 8833, 64 FR 43616, Aug. 11, 1999]

COMPUTATION OF CONSOLIDATED TAXABLE INCOME

§ 1.1502–11 Consolidated taxable income.

(a) *In general*. The consolidated taxable income for a consolidated return year shall be determined by taking into account:

(1) The separate taxable income of each member of the group (see § 1.1502–12 for the computation of separate taxable income);

(2) Any consolidated net operating loss deduction (see §§ 1.1502–21 (or 1.1502-21A, as appropriate) for the computation of the consolidated net operating loss deduction);

(3) Any consolidated capital gain net income (net capital gain for taxable years beginning before January 1, 1977) (see §§ 1.1502–22 (or 1.1502-22A, as appropriate) for the computation of the consolidated capital gain net income (net capital gain for taxable years beginning before January 1, 1977));

(4) Any consolidated section 1231 net loss (see §§ 1.1502–23 (or 1.1502-23A, as appropriate) for the computation of the consolidated section 1231 net loss);

(5) Any consolidated charitable contributions deduction (see § 1.1502–24 for the computation of the consolidated charitable contributions deduction);

(6) Any consolidated section 922 deduction (see § 1.1502–25 for the computation of the consolidated section 922 deduction);

(7) Any consolidated dividends received deduction (see § 1.1502–26 for the computation of the consolidated dividends received deduction); and

(8) Any consolidated section 247 deduction (see § 1.1502–27 for the computation of the consolidated section 247 deduction).

(b) *Elimination of circular stock basis adjustments*—(1) *In general.* If one member (P) disposes of the stock of another member (S), this paragraph (b) limits the use of S's deductions and losses in the year of disposition and the carryback of items to prior years. The purpose of the limitation is to prevent P's income or gain from the disposition of S's stock from increasing the absorption of S's deductions and losses, because the increased absorption would reduce P's basis (or increase its excess loss account) in S's stock under § 1.1502–32 and, in turn, increase P's income or gain. See paragraph (b)(3) of this section for the application of these principles to P's deduction or loss from the disposition of S's stock, and paragraph (b)(4) of this section for the application of these principles to multiple stock dispositions. See § 1.1502–19(c) for the definition of disposition.

(2) *Limitation on deductions and losses*—(i) *Determination of amount of limitation.* If P disposes of one or more shares of S's stock, the extent to which S's deductions and losses for the tax year of the disposition (and its deductions and losses carried over from prior years) may offset income and gain is subject to limitation. The amount of S's deductions and losses that may offset income and gain is determined by tentatively computing taxable income (or loss) for the year of disposition (and any prior years to which the deductions or losses may be carried) without taking into account P's income and gain from the disposition.

(ii) *Application of limitation.* S's deductions and losses offset income and gain only to the extent of the amount determined under paragraph (b)(2)(i) of this section. To the extent S's deductions and losses in the year of disposition cannot offset income or gain because of the limitation under this paragraph (b), the items are carried to other years under the applicable provisions of the Internal Revenue Code and regulations as if they were the only items incurred by S in the year of disposition. For example, to the extent S incurs an operating loss in the year of disposition that is limited, the loss is treated as a separate net operating loss attributable to S arising in that year. The tentative computation does not affect the manner in which S's unlimited deductions and losses are absorbed or the manner in which deductions and losses of other members are absorbed. (If the amount of S's unlimited deductions and losses actually absorbed is less than the amount absorbed in the tentative computation, P's stock basis adjustments under § 1.1502–32 reflect only the amounts actually absorbed.)

(iii) *Examples.* For purposes of the examples in this paragraph (b), unless otherwise stated, P owns all of the only class of S's stock for the entire year, S owns no stock of lower-tier members, the tax year of all persons is the calendar year, all persons use the accrual method of accounting, the facts set forth the only corporate activity, all transactions are between unrelated persons, and tax liabilities are disregarded. The principles of this paragraph (b)(2) are illustrated by the following examples.

Example 1. Limitation on losses with respect to stock gain. (a) P has a $500 basis in S's stock. For Year 1, P has ordinary income of $30 (determined without taking P's gain or loss from the disposition of S's stock into account) and S has an $80 ordinary loss. P sells S's stock for $520 at the close of Year 1.

(b) To determine the amount of the limitation on S's loss under paragraph (b)(2)(i) of this section, and the effect under § 1.1502–32(b) of the absorption of S's loss on P's basis in S's stock, P's gain or loss from the disposition of S's stock is not taken into account. The group is tentatively treated as having a consolidated net operating loss of $50 (P's $30 of income minus S's $80 loss). Thus, $50 of S's loss is limited under this paragraph (b).

(c) Because $30 of S's loss is absorbed in the determination of consolidated taxable income under paragraph (b)(2)(ii) of this section, P's basis in S's stock is reduced under § 1.1502–32(b) from $500 to $470 immediately before the disposition. Consequently, P recognizes a $50 gain from the sale of S's stock and the group has consolidated taxable income of $50 for Year 1 (P's $30 of ordinary income and $50 gain from the sale of S's stock, less the $30 of S's loss). In addition, S's limited loss of $50 is treated as a separate net operating loss attributable to S and, because S ceases to be a member, the loss is apportioned to S under § 1.1502–21 (or § 1.1502-79A, as appropriate) and carried to its first separate return year.

Example 2. Carrybacks and carryovers. (a) For Year 1, the P group has consolidated taxable income of $30, and a consolidated net capital loss of $100 ($50 attributable to P and $50 to S). At the beginning of Year 2, P has a $300 basis in S's stock. For Year 2, P has ordinary income of $30, and a $20 capital gain (determined without taking the $100 consolidated net capital loss carryover or P's gain or loss from the disposition of S's stock into account), and S has a $100 ordinary loss. P sells S's stock for $280 at the close of Year 2.

(b) To determine the amount of the limitation under paragraph (b)(2)(i) of this section on S's losses, and the effect of the absorption of S's losses on P's basis in S's stock under § 1.1502–32(b), P's gain or loss from the disposition of S's stock is not taken into account. For Year 2, the P group is tentatively treated as having a $70 consolidated net operating loss (S's $100 ordinary loss, less P's $30 of ordinary income). The P group is also treated as having no consolidated net capital gain in Year 2, because P's $20 capital gain is reduced by $20 of the consolidated net capital loss carryover from Year 1 under section 1212(a) (the absorption of which is attributed equally to P and S). In addition, of the $70 consolidated net operating loss, $30 is carried back to Year 1 and offsets P's ordinary income in that year, and $40 is carried forward. Consequently, $40 of S's operating loss from Year 2, and $40 of the consolidated net capital loss carryover from Year 1 attributable to S, are limited under this paragraph (b).

(c) Under paragraph (b)(2)(ii) of this section, the limitation under this paragraph (b) does not affect the absorption of any deductions and losses attributable to P, $60 of S's operating loss from Year 2, and $10 of the consolidated net capital loss from Year 1 attributable to S. Consequently, P's basis in S's stock is reduced under § 1.1502–32(b) by $70, from $300 to $230, and P recognizes a $50 gain from the sale of S's stock in Year 2. Thus, the P group is treated as having a $20 unlimited net operating loss that is carried back to Year 1:

Ordinary income:	
P	$30
S (excluding the $40 limited loss)	(60)
Sub Total	$(30)
Consolidated net capital gain:	
P ($20 + $50 from S stock − $50 from Year 1)	$20
S (−$10 from Year 1)	(10)
Sub Total	$10
Consolidated taxable income	$(20)

(d) Under paragraph (b)(2)(ii) of this section, S's $40 ordinary loss from Year 2 that is limited under this paragraph (b) is treated as a separate net operating loss arising in Year 2. Similarly, $40 of the consolidated net capital loss from Year 1 attributable to S is treated as a separate net capital loss carried over from Year 1. Because S ceases to be a member, the $40 net operating loss from Year 2 and the $40 consolidated net capital loss from Year 1 are allocated to S under §§ 1.1502–21 and 1.1502–22, respectively (or § 1.1502-79A, as appropriate) and are carried to S's first separate return year.

Example 3. Allocation of basis adjustments. (a) For Year 1, the P group has consolidated taxable income of $100. At the beginning of Year 2, P has a $40 basis in each of the 10 shares of S's stock. For Year 2, P has an $80 ordinary loss (determined without taking into account P's gain or loss from the disposition of S's stock) and S has an $80 ordinary loss. P sells 2 shares of S's stock for $85 each at the close of Year 2.

(b) Under paragraph (b)(2)(i) of this section, the amount of the limitation on S's loss is determined by tentatively treating the P group as having a $160 consolidated net operating loss for Year 2. Of this amount, $100 is carried back under section 172 and absorbed in Year 1 ($50 attributable to S and $50 attributable to P). Consequently, $30 of S's loss is limited under this paragraph (b).

(c) Under paragraph (b)(2)(ii) of this section, the limitation under this paragraph (b) does not affect the absorption of P's $80 ordinary loss or $50 of S's ordinary loss. Consequently, P's basis in each share of S's stock is reduced from $40 to $35 under § 1.1502–32(b), and P recognizes a $100 gain from the sale of the 2 shares. Thus, the P group is treated as having a $30 unlimited net operating loss:

Ordinary loss:	
P	$(80)
S (excluding the $30 limited loss)	(50)
Sub Total	$(130)
Consolidated net capital gain:	
P	$100
S	0
Sub Total	$100
Unlimited consolidated net operating loss	$(30)

(d) A portion of the $130 of unlimited operating losses for Year 2 is fully absorbed in that year, and a portion is carried back to Year 1. Thus, $61.50 of P's $80 loss ($100 multiplied by $80/$130) and $38.50 of S's $50 unlimited loss ($100 multiplied by $50/$130) are absorbed in Year 2. P's remaining $18.50 of loss and S's remaining $11.50 of loss are not subject to limitation and are carried back and absorbed in Year 1.

(e) Under paragraph (b)(2)(ii) of this section, S's $30 of loss limited under this paragraph (b) is treated as a separate net operating loss.

(3) *Loss dispositions*—(i) *General rule.* The principles of paragraph (b)(2) of this section apply to the extent necessary to carry out the purposes of paragraph (b)(1) of this section if P recognizes a deduction or loss from the disposition of S's stock.

(ii) *Example.* The principles of this paragraph (b)(3) are illustrated by the following example.

Example. (a) P has a $400 basis in S's stock. For Year 1, P has a capital gain of $100 (determined without taking P's gain or loss from the disposition of S's stock into account) and S has both a $60 capital loss and a $200 ordinary loss. P sells S's stock for $140 at the close of Year 1.

(b) Under paragraph (b)(3) of this section, the amount of S's ordinary and capital losses that may offset income and gain is determined by tentatively computing the group's consolidated net operating loss and consolidated net capital loss without taking into account P's loss from the disposition of S's stock. The limitation is necessary to prevent P's loss from the disposition of S's stock from affecting the absorption of S's losses and thereby the adjustments to P's basis in S's stock under §1.1502–32(b) (which would, in turn, affect P's loss).

(c) Under the principles of paragraph (b)(2)(i) of this section, the amount of the limitation on S's loss is determined by tentatively treating the P group as having a $40 consolidated net capital gain and a $200 ordinary loss, which results in a $160 consolidated net operating loss for Year 1, all of which is attributable to S. Thus, $160 of S's ordinary loss is limited under this paragraph (b). See also §1.1502–20 for rules applicable to losses from the sale of stock of subsidiaries.

(4) *Multiple dispositions*—(i) *Stock of a member.* To the extent income, gain, deduction, or loss from a prior disposition of S's stock is deferred under any rule of law, the limitation under paragraph (b)(2) of this section is determined by treating the year the deferred amount is taken into account as the year of the disposition.

(ii) *Stock of different members.* If S is a higher-tier corporation with respect to another member (T), and all of T's items of income, gain, deduction, and loss (including the absorption of T's deduction or loss) would be fully reflected in P's basis in S's stock under §1.1502–32, the limitation under paragraph (b)(2)(i) of this section with respect to T's deductions and losses is determined without taking into account any income, gain, deduction, or loss from the disposition of the stock of S or T (or of the stock of members owned in the chain connecting S and T). However, this paragraph (b) does not otherwise limit the absorption of one member's deduction or loss with respect to the disposition of another member's stock.

(iii) *Examples.* The principles of this paragraph (b)(4) are illustrated by the following examples.

Example 1. Chain of subsidiaries. (a) P owns all of S's stock with a $500 basis, and S owns all of T's stock with a $500 basis. For Year 1, P has ordinary income of $30, S has no income or loss, and T has an $80 ordinary loss. P sells S's stock for $520 at the close of Year 1.

(b) Under paragraph (b)(4) of this section, to determine the amount of the limitation under paragraph (b) of this section on T's loss, and the effect of the absorption of T's loss on P's basis in S's stock under §1.1502–32(b), P's gain or loss from the disposition of S's stock is not taken into account. The group is tentatively treated as having a consolidated net operating loss of $50 (P's $30 of income minus T's $80 loss). Because only $30 of T's loss offsets income or gain, P's basis in S's stock is reduced under §1.1502–32(b) from $500 to $470 immediately before the disposition of S's stock. Thus, P takes into account a $50 gain from the sale of S's stock.

(c) The facts are the same as in paragraph (a) of this *Example 1,* except that S has a $10 excess loss account in T's stock (rather than a $500 basis). Under paragraph (b)(4) of this section, neither P's gain or loss from the disposition of S's stock nor S's gain or loss from the disposition of T's stock (under §1.1502–19) are taken into account for purposes of the tentative computations and the effect of any absorption under §1.1502–32(b) on P's basis in S's stock and S's excess loss account in T's stock. The group is tentatively treated as having a consolidated net operating loss of $50 (P's $30 of income minus T's $80 loss), and only $30 of T's loss may offset the group's income or gain. Under

§ 1.1502–32(b), the absorption of $30 of T's loss increases S's excess loss account in T's stock to $40 and, under § 1.1502–19, the excess loss account is taken into account. Moreover, under § 1.1502–32(b), P's basis in S's stock is increased immediately before the sale by $10 (S's $40 gain under § 1.1502–19(b) minus T's $30 loss absorbed and tiered up under § 1.1502–32(b)), from $500 to $510. Thus, P takes into account a $10 gain from the sale of S's stock, and S takes into account a $40 gain from its excess loss account in T's stock.

Example 2. Brother-sister subsidiaries. (a) P owns all of the stock of S1 and S2, each with a $50 basis. For Year 1, the group has a $100 consolidated net operating loss ($50 of which is attributable to S1, and $50 to S2) determined without taking gain or loss from the disposition of member stock into account. At the close of Year 1, P sells the stock of S1 and S2 for $100 each.

(b) Paragraph (b)(4) of this section does not limit the loss of S1 or S2 with respect to the disposition of stock of the other. Consequently, each subsidiary's loss may offset P's gain from the disposition of the stock of the other subsidiary. Because this absorption results in a $50 reduction in P's basis in the stock of each subsidiary under § 1.1502–32(b), P's aggregate gain from the stock dispositions is increased from $100 to $200, $100 of which is offset by the losses of the subsidiaries.

(5) *Effective date.* This paragraph (b) applies to stock dispositions occurring in consolidated return years beginning on or after January 1, 1995. For prior years, see § 1.1502–11(b) as contained in the 26 CFR part 1 edition revised as of April 1, 1994.

(c) *Disallowance of loss attributable to pre-1966 distributions.* No loss shall be allowed upon the sale or other disposition of stock, bonds, or other obligations of a member or former member to the extent that such loss is attributable to a distribution made in an affiliated year beginning before January 1, 1966, out of earnings and profits accumulated before the distributing corporation became a member.

[T.D. 7246, 38 FR 759, Jan. 4, 1973, as amended by T.D. 7728, 45 FR 72650, Nov. 3, 1980; T.D. 8560, 59 FR 41675, Aug. 15, 1994; T.D. 8677, 61 FR 33323, 33326, June 27, 1996; T.D. 8560, 62 FR 12097, Mar. 14, 1997; T.D. 8823, 64 FR 36099, July 2, 1999]

COMPUTATION OF SEPARATE TAXABLE INCOME

§ 1.1502–12 Separate taxable income.

The separate taxable income of a member (including a case in which deductions exceed gross income) is computed in accordance with the provisions of the Code covering the determination of taxable income of separate corporations, subject to the following modifications:

(a) Transactions between members and transactions with respect to stock, bonds, or other obligations of members shall be reflected according to the provisions of § 1.1502–13;

(b) Any deduction which is disallowed under §§ 1.1502–15A or 1.1502–15 shall be taken into account as provided in those sections;

(c) The limitation on deductions provided in section 615(c) or section 617(h) shall be taken into account as provided in § 1.1502–16;

(d) The method of accounting under which such computation is made and the adjustments to be made because of any change in method of accounting shall be determined under § 1.1502–17;

(e) Inventory adjustments shall be made as provided in § 1.1502–18;

(f) Any amount included in income under § 1.1502–19 shall be taken into account;

(g) In the computation of the deduction under section 167, property shall not lose its character as new property as a result of a transfer from one member to another member during a consolidated return year if:

(1) The transfer occurs on or before January 4, 1973, or

(2) The transfer occurs after January 4, 1973, and the transfer is an intercompany transaction as defined in § 1.1502–13 or the basis of the property in the hands of the transferee is determined (in whole or in part) by reference to its basis in the hands of the transferor;

(h) No net operating loss deduction shall be taken into account;

(i) [Reserved]

(j) No capital gains or losses shall be taken into account;

(k) No gains and losses subject to section 1231 shall be taken into account;

(l) No deduction under section 170 with respect to charitable contributions shall be taken into account;

(m) No deduction under section 922 (relating to the deduction for Western Hemisphere trade corporations) shall be taken into account;

(n) No deductions under section 243(a)(1), 244(a), 245, or 247 (relating to deductions with respect to dividends received and dividends paid) shall be taken into account;

(o) Basis shall be determined under §§ 1.1502–31 and 1.1502–32, and earnings and profits shall be determined under § 1.1502–33; and

(p) The limitation on deductions provided in section 613A shall be taken into account for each member's oil and gas properties as provided in § 1.1502–44.

(q) A thrift institution's deduction under section 593(b)(2) (relating to the addition to the reserve for bad debts of a thrift institution under the percentage of taxable income method) shall be determined under § 1.1502–42.

(r) For rules relating to loss disallowance or basis reduction on the disposition or deconsolidation of stock of a subsidiary, see §§ 1.337(d)–1, 1.337(d)–2 and § 1.1502–20.

(Secs. 1502 and 7805 of the Internal Revenue Code of 1954 (68A Stat. 637; 917; 26 U.S.C. 1502, 7805))

[T.D. 6894, 31 FR 11794, Sept. 8, 1966, as amended by T.D. 7191, 37 FR 12949, June 30, 1972; T.D. 7246, 38 FR 760, Jan. 4, 1973; T.D. 7725, 45 FR 65561, Oct. 3, 1980; T.D. 7876, 48 FR 11258, Mar. 17, 1983; T.D. 8294, 55 FR 9434, Mar. 14, 1990; T.D. 8319, 55 FR 49038, Nov. 26, 1990; T.D. 8364, 56 FR 47401, Sept. 19, 1991; T.D. 8597, 60 FR 36679, July 18, 1995; T.D. 8677, 61 FR 33323, June 27, 1996; T.D. 8823, 64 FR 36099, July 2, 1999]

§ 1.1502–13 Intercompany transactions.

(a) *In general*—(1) *Purpose*. This section provides rules for taking into account items of income, gain, deduction, and loss of members from intercompany transactions. The purpose of this section is to provide rules to clearly reflect the taxable income (and tax liability) of the group as a whole by preventing intercompany transactions from creating, accelerating, avoiding, or deferring consolidated taxable income (or consolidated tax liability).

(2) *Separate entity and single entity treatment*. Under this section, the selling member (S) and the buying member (B) are treated as separate entities for some purposes but as divisions of a single corporation for other purposes. The *amount* and *location* of S's intercompany items and B's corresponding items are determined on a separate entity basis (separate entity treatment). For example, S determines its gain or loss from a sale of property to B on a separate entity basis, and B has a cost basis in the property. The *timing*, and the *character*, *source*, and other *attributes* of the intercompany items and corresponding items, although initially determined on a separate entity basis, are redetermined under this section to produce the effect of transactions between divisions of a single corporation (single entity treatment). For example, if S sells land to B at a gain and B sells the land to a nonmember, S does not take its gain into account until B's sale to the nonmember.

(3) *Timing rules as a method of accounting*—(i) *In general*. The timing rules of this section are a method of accounting for intercompany transactions, to be applied by each member in addition to the member's other methods of accounting. See § 1.1502–17. To the extent the timing rules of this section are inconsistent with a member's otherwise applicable methods of accounting, the timing rules of this section control. For example, if S sells property to B in exchange for B's note, the timing rules of this section apply instead of the installment sale rules of section 453. S's or B's application of the timing rules of this section to an intercompany transaction clearly reflects income only if the effect of that transaction as a whole (including, for example, related costs and expenses) on consolidated taxable income is clearly reflected.

(ii) *Automatic consent for joining and departing members*—(A) *Consent granted*. Section 446(e) consent is granted under this section to the extent a change in method of accounting is necessary solely by reason of the timing rules of this section—

(*1*) For each member, with respect to its intercompany transactions, in the first consolidated return year which

follows a separate return year and in which the member engages in an intercompany transaction; and

(*2*) For each former member, with respect to its transactions with members that would otherwise be intercompany transactions if the former member were still a member, in the first separate return year in which the former member engages in such a transaction.

(B) *Cut-off basis*. Any change in method of accounting described in paragraph (a)(3)(ii)(A) of this section is to be effected on a cut-off basis for transactions entered into on or after the first day of the year for which consent is granted under paragraph (a)(3)(ii)(A) of this section.

(4) *Other law*. The rules of this section apply in addition to other applicable law (including nonstatutory authorities). For example, this section applies in addition to sections 267(f) (additional rules for certain losses), 269 (acquisitions to evade or avoid income tax), and 482 (allocations among commonly controlled taxpayers). Thus, an item taken into account under this section can be deferred, disallowed, or eliminated under other applicable law, for example, section 1091 (losses from wash sales).

(5) *References*. References in other sections to this section include, as appropriate, references to prior law. For effective dates and prior law see paragraph (l) of this section.

(6) *Overview*—(i) *In general*. The principal rules of this section that implement single entity treatment are the matching rule and the acceleration rule of paragraphs (c) and (d) of this section. Under the matching rule, S and B are generally treated as divisions of a single corporation for purposes of taking into account their items from intercompany transactions. The acceleration rule provides additional rules for taking the items into account if the effect of treating S and B as divisions cannot be achieved (for example, if S or B becomes a nonmember). Paragraph (b) of this section provides definitions. Paragraph (e) of this section provides simplifying rules for certain transactions. Paragraphs (f) and (g) of this section provide additional rules for stock and obligations of members. Paragraphs (h) and (j) of this section provide anti-avoidance rules and miscellaneous operating rules.

(ii) *Table of examples*. Set forth below is a table of the examples contained in this section.

Matching rule. (§ 1.1502–13(c)(7)(ii))

Example 1. Intercompany sale of land.
Example 2. Dealer activities.
Example 3. Intercompany section 351 transfer.
Example 4. Depreciable property.
Example 5. Intercompany sale followed by installment sale.
Example 6. Intercompany sale of installment obligation.
Example 7. Performance of services.
Example 8. Rental of property.
Example 9. Intercompany sale of a partnership interest.
Example 10. Net operating losses subject to section 382 or the SRLY rules.
Example 11. Section 475.
Example 12. Section 1092.
Example 13. Manufacturer incentive payments.
Example 14. Source of income under section 863.
Example 15. Section 1248.

Acceleration rule. (§ 1.1502–13(d)(3))

Example 1. Becoming a nonmember—timing.
Example 2. Becoming a nonmember—attributes.
Example 3. Selling member's disposition of installment note.
Example 4. Cancellation of debt and attribute reduction under section 108(b).
Example 5. Section 481.

Simplifying rules—inventory. (§ 1.1502–13(e)(1)(v))

Example 1. Increment averaging method.
Example 2. Increment valuation method.
Example 3. Other reasonable inventory methods.

Stock of members. (§ 1.1502–13(f)(7))

Example 1. Dividend exclusion and property distribution.
Example 2. Excess loss accounts.
Example 3. Intercompany reorganization.
Example 4. Stock redemptions and distributions.
Example 5. Intercompany stock sale followed by section 332 liquidation.
Example 6. Intercompany stock sale followed by section 355 distribution.

Obligations of members. (§ 1.1502–13(g)(5))

Example 1. Interest on intercompany debt.
Example 2. Intercompany debt becomes nonintercompany debt.

Example 3. Loss or bad debt deduction with respect to intercompany debt.
Example 4. Nonintercompany debt becomes intercompany debt.
Example 5. Notional principal contracts.

Anti-avoidance rules. (§ 1.1502–13(h)(2))

Example 1. Sale of a partnership interest.
Example 2. Transitory status as an intercompany obligation.
Example 3. Corporate mixing bowl.
Example 4. Partnership mixing bowl.
Example 5. Sale and leaseback.

Miscellaneous operating rules. (§ 1.1502–13(j)(9))

Example 1. Intercompany sale followed by section 351 transfer to member.
Example 2. Intercompany sale of member stock followed by recapitalization.
Example 3. Back-to-back intercompany transactions—matching.
Example 4. Back-to-back intercompany transactions—acceleration.
Example 5. Successor group.
Example 6. Liquidation—80% distributee.
Example 7. Liquidation—no 80% distributee.

(b) *Definitions.* For purposes of this section—

(1) *Intercompany transactions*—(i) *In general.* An intercompany transaction is a transaction between corporations that are members of the same consolidated group immediately after the transaction. S is the member transferring property or providing services, and B is the member receiving the property or services. Intercompany transactions include—

(A) S's sale of property (or other transfer, such as an exchange or contribution) to B, whether or not gain or loss is recognized;

(B) S's performance of services for B, and B's payment or accrual of its expenditure for S's performance;

(C) S's licensing of technology, rental of property, or loan of money to B, and B's payment or accrual of its expenditure; and

(D) S's distribution to B with respect to S stock.

(ii) *Time of transaction.* If a transaction occurs in part while S and B are members and in part while they are not members, the transaction is treated as occurring when performance by either S or B takes place, or when payment for performance would be taken into account under the rules of this section if it were an intercompany transaction, whichever is earliest. Appropriate adjustments must be made in such cases by, for example, dividing the transaction into two separate transactions reflecting the extent to which S or B has performed.

(iii) *Separate transactions.* Except as otherwise provided in this section, each transaction is analyzed separately. For example, if S simultaneously sells two properties to B, one at a gain and the other at a loss, each property is treated as sold in a separate transaction. Thus, the gain and loss cannot be offset or netted against each other for purposes of this section. Similarly, each payment or accrual of interest on a loan is a separate transaction. In addition, an accrual of premium is treated as a separate transaction, or as an offset to interest that is not a separate transaction, to the extent required under separate entity treatment. If two members exchange property, each member is S with respect to the property it transfers and B with respect to the property it receives. If two members enter into a notional principal contract, each payment under the contract is a separate transaction and the member making the payment is B with respect to that payment and the member receiving the payment is S. See paragraph (j)(4) of this section for rules aggregating certain transactions.

(2) *Intercompany items*—(i) *In general.* S's income, gain, deduction, and loss from an intercompany transaction are its intercompany items. For example, S's gain from the sale of property to B is intercompany gain. An item is an intercompany item whether it is directly or indirectly from an intercompany transaction.

(ii) *Related costs or expenses.* S's costs or expenses related to an intercompany transaction are included in determining its intercompany items. For example, if S sells inventory to B, S's direct and indirect costs properly includible under section 263A are included in determining its intercompany income. Similarly, related costs or expenses that are not capitalized under S's separate entity method of accounting are included in determining its intercompany items. For example, deductions for employee wages, in addition to other related costs, are included in determining S's intercompany items

from performing services for B, and depreciation deductions are included in determining S's intercompany items from renting property to B.

(iii) *Amounts not yet recognized or incurred.* S's intercompany items include amounts from an intercompany transaction that are not yet taken into account under its separate entity method of accounting. For example, if S is a cash method taxpayer, S's intercompany income might be taken into account under this section even if the cash is not yet received. Similarly, an amount reflected in basis (or an amount equivalent to basis) under S's separate entity method of accounting that is a substitute for income, gain, deduction or loss from an intercompany transaction is an intercompany item.

(3) *Corresponding items*—(i) *In general.* B's income, gain, deduction, and loss from an intercompany transaction, or from property acquired in an intercompany transaction, are its corresponding items. For example, if B pays rent to S, B's deduction for the rent is a corresponding deduction. If B buys property from S and sells it to a nonmember, B's gain or loss from the sale to the nonmember is a corresponding gain or loss; alternatively, if B recovers the cost of the property through depreciation, B's depreciation deductions are corresponding deductions. An item is a corresponding item whether it is directly or indirectly from an intercompany transaction (or from property acquired in an intercompany transaction).

(ii) *Disallowed or eliminated amounts.* B's corresponding items include amounts that are permanently disallowed or permanently eliminated, whether directly or indirectly. Thus, corresponding items include amounts disallowed under section 265 (expenses relating to tax-exempt income), and amounts not recognized under section 311(a) (nonrecognition of loss on distributions), section 332 (nonrecognition on liquidating distributions), or section 355(c) (certain distributions of stock of a subsidiary). On the other hand, an amount is not permanently disallowed or permanently eliminated (and therefore is not a corresponding item) to the extent it is not recognized in a transaction in which B receives a successor asset within the meaning of paragraph (j)(1) of this section. For example, B's corresponding items do not include amounts not recognized from a transaction with a nonmember to which section 1031 applies or from another transaction in which B receives exchanged basis property.

(4) *Recomputed corresponding items.* The recomputed corresponding item is the corresponding item that B would take into account if S and B were divisions of a single corporation and the intercompany transaction were between those divisions. For example, if S sells property with a $70 basis to B for $100, and B later sells the property to a nonmember for $90, B's corresponding item is its $10 loss, and the recomputed corresponding item is $20 of gain (determined by comparing the $90 sales price with the $70 basis the property would have if S and B were divisions of a single corporation). Although neither S nor B actually takes the recomputed corresponding item into account, it is computed as if B did take it into account (based on reasonable and consistently applied assumptions, including any provision of the Internal Revenue Code or regulations that would affect its timing or attributes).

(5) *Treatment as a separate entity.* Treatment as a separate entity means treatment without application of the rules of this section, but with the application of the other consolidated return regulations. For example, if S sells the stock of another member to B, S's gain or loss on a separate entity basis is determined with the application of §1.1502–80(b) (non-applicability of section 304), but without redetermination under paragraph (c) or (d) of this section.

(6) *Attributes.* The attributes of an intercompany item or corresponding item are all of the item's characteristics, except *amount*, *location*, and *timing*, necessary to determine the item's effect on taxable income (and tax liability). For example, attributes include character, source, treatment as excluded from gross income or as a noncapital, nondeductible amount, and treatment as built-in gain or loss under section 382(h) or 384. In contrast, the

characteristics of property, such as a member's holding period, or the fact that property is included in inventory, are not attributes of an item, but these characteristics might affect the determination of the attributes of items from the property.

(c) *Matching rule.* For each consolidated return year, B's corresponding items and S's intercompany items are taken into account under the following rules:

(1) *Attributes and holding periods*—(i) *Attributes.* The separate entity attributes of S's intercompany items and B's corresponding items are redetermined to the extent necessary to produce the same effect on consolidated taxable income (and consolidated tax liability) as if S and B were divisions of a single corporation, and the intercompany transaction were a transaction between divisions. Thus, the activities of both S and B might affect the attributes of both intercompany items and corresponding items. For example, if S holds property for sale to unrelated customers in the ordinary course of its trade or business, S sells the property to B at a gain and B sells the property to an unrelated person at a further gain, S's intercompany gain and B's corresponding gain might be ordinary because of S's activities with respect to the property. Similar principles apply if S performs services, rents property, or engages in any other intercompany transaction.

(ii) *Holding periods.* The holding period of property transferred in an intercompany transaction is the aggregate of the holding periods of S and B. However, if the basis of the property is determined by reference to the basis of other property, the property's holding period is determined by reference to the holding period of the other property. For example, if S distributes stock to B in a transaction to which section 355 applies, B's holding period in the distributed stock is determined by reference to B's holding period in the stock of S.

(2) *Timing*—(i) *B's items.* B takes its corresponding items into account under its accounting method, but the redetermination of the attributes of a corresponding item might affect its timing. For example, if B's sale of property acquired from S is treated as a dealer disposition because of S's activities, section 453(b) prevents any corresponding income of B from being taken into account under the installment method.

(ii) *S's items.* S takes its intercompany item into account to reflect the difference for the year between B's corresponding item taken into account and the recomputed corresponding item.

(3) *Divisions of a single corporation.* As divisions of a single corporation, S and B are treated as engaging in their actual transaction and owning any actual property involved in the transaction (rather than treating the transaction as not occurring). For example, S's sale of land held for investment to B for cash is not disregarded, but is treated as an exchange of land for cash between divisions (and B therefore succeeds to S's basis in the property). Similarly, S's issuance of its own stock to B in exchange for property is not disregarded, B is treated as owning the stock it receives in the exchange, and section 1032 does not apply to B on its subsequent sale of the S stock. Although treated as divisions, S and B nevertheless are treated as:

(i) Operating separate trades or businesses. See, e.g., §1.446–1(d) (accounting methods for a taxpayer engaged in more than one business).

(ii) Having any special status that they have under the Internal Revenue Code or regulations. For example, a bank defined in section 581, a domestic building and loan association defined in section 7701(a)(19), and an insurance company to which section 801 or 831 applies are treated as divisions having separate special status. On the other hand, the fact that a member holds property for sale to customers in the ordinary course of its trade or business is not a special status.

(4) *Conflict or allocation of attributes.* This paragraph (c)(4) provides special rules for redetermining and allocating attributes under paragraph (c)(1)(i) of this section.

(i) *Offsetting amounts*—(A) *In general.* To the extent B's corresponding item offsets S's intercompany item in amount, the attributes of B's corresponding item, determined based on

both S's and B's activities, control the attributes of S's offsetting intercompany item. For example, if S sells depreciable property to B at a gain and B depreciates the property, the attributes of B's depreciation deduction (ordinary deduction) control the attributes of S's offsetting intercompany gain. Accordingly, S's gain is ordinary.

(B) *B controls unreasonable.* To the extent the results under paragraph (c)(4)(i)(A) are inconsistent with treating S and B as divisions of a single corporation, the attributes of the offsetting items must be redetermined in a manner consistent with treating S and B as divisions of a single corporation. To the extent, however, that B's corresponding item on a separate entity basis is excluded from gross income, is a noncapital, nondeductible amount, or is otherwise permanently disallowed or eliminated, the attributes of B's corresponding item always control the attributes of S's offsetting intercompany item.

(ii) *Allocation.* To the extent S's intercompany item and B's corresponding item do not offset in amount, the attributes redetermined under paragraph (c)(1)(i) of this section must be allocated to S's intercompany item and B's corresponding item by using a method that is reasonable in light of all the facts and circumstances, including the purposes of this section and any other rule affected by the attributes of S's intercompany item and B's corresponding item. A method of allocation or redetermination is unreasonable if it is not used consistently by all members of the group from year to year.

(5) *Special status.* Notwithstanding the general rule of paragraph (c)(1)(i) of this section, to the extent an item's attributes determined under this section are permitted or not permitted to a member under the Internal Revenue Code or regulations by reason of the member's special status, the attributes required under the Internal Revenue Code or regulations apply to that member's items (but not the other member). For example, if S is a bank to which section 582(c) applies, and sells debt securities at a gain to B, a nonbank, the character of S's intercompany gain is ordinary as required under section 582(c), but the character of B's corresponding item as capital or ordinary is determined under paragraph (c)(1)(i) of this section without the application of section 582(c). For other special status issues, see, for example, sections 595(b) (foreclosure on property securing loans), 818(b) (life insurance company treatment of capital gains and losses), and 1503(c) (limitation on absorption of certain losses).

(6) *Treatment of intercompany items if corresponding items are excluded or nondeductible*—(i) *In general.* Under paragraph (c)(1)(i) of this section, S's intercompany item might be redetermined to be excluded from gross income or treated as a noncapital, nondeductible amount. For example, S's intercompany loss from the sale of property to B is treated as a noncapital, nondeductible amount if B distributes the property to a nonmember shareholder at no further gain or loss (because, if S and B were divisions of a single corporation, the loss would not have been recognized under section 311(a)). Paragraph (c)(6)(ii) of this section, however, provides limitations on the application of this rule to intercompany income or gain. See also §§ 1.1502–32 and 1.1502–33 (adjustments to S's stock basis and earnings and profits to reflect amounts so treated).

(ii) *Limitation on treatment of intercompany items as excluded from gross income.* Notwithstanding the general rule of paragraph (c)(1)(i) of this section, S's intercompany income or gain is redetermined to be excluded from gross income only to the extent one of the following applies:

(A) *Disallowed amounts.* B's corresponding item is a deduction or loss and, in the taxable year the item is taken into account under this section, it is permanently and explicitly disallowed under another provision of the Internal Revenue Code or regulations. For example, deductions that are disallowed under section 265 are permanently and explicitly disallowed. An amount is not permanently and explicitly disallowed, for example, to the extent that—

(*1*) The Internal Revenue Code or regulations provide that the amount is not recognized (for example, a loss that is realized but not recognized under

section 332 or section 355(c) is not permanently and explicitly disallowed, notwithstanding that it is a corresponding item within the meaning of paragraph (b)(3)(ii) of this section (certain disallowed or eliminated amounts));

(*2*) A related amount might be taken into account by B with respect to successor property, such as under section 280B (demolition costs recoverable as capitalized amounts);

(*3*) A related amount might be taken into account by another taxpayer, such as under section 267(d) (disallowed loss under section 267(a) might result in nonrecognition of gain for a related person);

(*4*) A related amount might be taken into account as a deduction or loss, including as a carryforward to a later year, under any provision of the Internal Revenue Code or regulations (whether or not the carryforward expires in a later year); or

(*5*) The amount is reflected in the computation of any credit against (or other reduction of) Federal income tax (whether allowed for the taxable year or carried forward to a later year).

(B) *Section 311.* The corresponding item is a loss that is realized, but not recognized under section 311(a) on a distribution to a nonmember (even though the loss is not a permanently and explicitly disallowed amount within the meaning of paragraph (c)(6)(ii)(A) of this section).

(C) *Other amounts.* The Commissioner determines that treating S's intercompany item as excluded from gross income is consistent with the purposes of this section and other applicable provisions of the Internal Revenue Code and regulations.

(7) *Examples*—(i) *In general.* For purposes of the examples in this section, unless otherwise stated, P is the common parent of the P consolidated group, P owns all of the only class of stock of subsidiaries S and B, X is a person unrelated to any member of the P group, the taxable year of all persons is the calendar year, all persons use the accrual method of accounting, tax liabilities are disregarded, the facts set forth the only corporate activity, no member has any special status, and the transaction is not otherwise subject to recharacterization. If a member acts as both a selling member and a buying member (e.g., with respect to different aspects of a single transaction, or with respect to related transactions), the member is referred to as M, M1, or M2 (rather than as S or B).

(ii) *Matching rule.* The matching rule of this paragraph (c) is illustrated by the following examples.

Example 1. Intercompany sale of land followed by sale to a nonmember. (a) *Facts.* S holds land for investment with a basis of $70. S has held the land for more than one year. On January 1 of Year 1, S sells the land to B for $100. B also holds the land for investment. On July 1 of Year 3, B sells the land to X for $110.

(b) *Definitions.* Under paragraph (b)(1) of this section, S's sale of the land to B is an intercompany transaction, S is the selling member, and B is the buying member. Under paragraphs (b)(2) and (3) of this section, S's $30 gain from the sale to B is its intercompany item, and B's $10 gain from the sale to X is its corresponding item.

(c) *Attributes.* Under the matching rule of paragraph (c) of this section, S's $30 intercompany gain and B's $10 corresponding gain are taken into account to produce the same effect on consolidated taxable income (and consolidated tax liability) as if S and B were divisions of a single corporation. In addition, the holding periods of S and B for the land are aggregated. Thus, the group's entire $40 of gain is long-term capital gain. Because both S's intercompany item and B's corresponding item on a separate entity basis are long-term capital gain, the attributes are not redetermined under paragraph (c)(1)(i) of this section.

(d) *Timing.* For each consolidated return year, S takes its intercompany item into account under the matching rule to reflect the difference for the year between B's corresponding item taken into account and the recomputed corresponding item. If S and B were divisions of a single corporation and the intercompany sale were a transfer between the divisions, B would succeed to S's $70 basis in the land and would have a $40 gain from the sale to X in Year 3, instead of a $10 gain. Consequently, S takes no gain into account in Years 1 and 2, and takes the entire $30 gain into account in Year 3, to reflect the $30 difference in that year between the $10 gain B takes into account and the $40 recomputed gain (the recomputed corresponding item). Under §§1.1502–32 and 1.1502–33, P's basis in its S stock and the earnings and profits of S and P do not reflect S's $30 gain until the gain is taken into account in Year 3. (Under paragraph (a)(3) of this section, the results would be the same if S sold the land to B in an installment sale to

which section 453 would otherwise apply, because S must take its intercompany gain into account under this section.)

(e) *Intercompany loss followed by sale to a nonmember at a gain.* The facts are the same as in paragraph (a) of this *Example 1,* except that S's basis in the land is $130 (rather than $70). The attributes and timing of S's intercompany loss and B's corresponding gain are determined under the matching rule in the manner provided in paragraphs (c) and (d) of this *Example 1.* If S and B were divisions of a single corporation and the intercompany sale were a transfer between the divisions, B would succeed to S's $130 basis in the land and would have a $20 loss from the sale to X instead of a $10 gain. Thus, S takes its entire $30 loss into account in Year 3 to reflect the $30 difference between B's $10 gain taken into account and the $20 recomputed loss. (The results are the same under section 267(f).) S's $30 loss is long-term capital loss, and B's $10 gain is long-term capital gain.

(f) *Intercompany gain followed by sale to a nonmember at a loss.* The facts are the same as in paragraph (a) of this *Example 1,* except that B sells the land to X for $90 (rather than $110). The attributes and timing of S's intercompany gain and B's corresponding loss are determined under the matching rule. If S and B were divisions of a single corporation and the intercompany sale were a transfer between the divisions, B would succeed to S's $70 basis in the land and would have a $20 gain from the sale to X instead of a $10 loss. Thus, S takes its entire $30 gain into account in Year 3 to reflect the $30 difference between B's $10 loss taken into account and the $20 recomputed gain. S's $30 gain is long-term capital gain, and B's $10 loss is long-term capital loss.

(g) *Intercompany gain followed by distribution to a nonmember at a loss.* The facts are the same as in paragraph (a) of this *Example 1,* except that B distributes the land to X, a minority shareholder of B, and at the time of the distribution the land has a fair market value of $90. The attributes and timing of S's intercompany gain and B's corresponding loss are determined under the matching rule. Under section 311(a), B does not recognize its $10 loss on the distribution to X. If S and B were divisions of a single corporation and the intercompany sale were a transfer between divisions, B would succeed to S's $70 basis in the land and would have a $20 gain from the distribution to X instead of an unrecognized $10 loss. Under paragraph (b)(3)(ii) of this section, B's loss that is not recognized under section 311(a) is a corresponding item. Thus, S takes its $30 gain into account under the matching rule in Year 3 to reflect the difference between B's $10 corresponding unrecognized loss and the $20 recomputed gain. B's $10 corresponding loss offsets $10 of S's intercompany gain and, under paragraph (c)(4)(i) of this section, the attributes of B's corresponding item control the attributes of S's intercompany item. Paragraph (c)(6) of this section does not prevent the redetermination of S's intercompany item as excluded from gross income. (See paragraph (c)(6)(ii)(B) of this section). Thus, $10 of S's $30 gain is redetermined to be excluded from gross income.

(h) *Intercompany sale followed by section 1031 exchange with nonmember.* The facts are the same as in paragraph (a) of this *Example 1,* except that, instead of selling the land to X, B exchanges the land for land owned by X in a transaction to which section 1031 applies. There is no difference in Year 3 between B's $0 corresponding item taken into account and the $0 recomputed corresponding item. Thus, none of S's intercompany gain is taken into account under the matching rule as a result of the section 1031 exchange. Instead, B's gain is preserved in the land received from X and, under the successor asset rule of paragraph (j)(1) of this section, S's intercompany gain is taken into account by reference to the replacement property. (If B takes gain into account as a result of boot received in the exchange, S's intercompany gain is taken into account under the matching rule to the extent the boot causes a difference between B's gain taken into account and the recomputed gain.)

(i) *Intercompany sale followed by section 351 transfer to nonmember.* The facts are the same as in paragraph (a) of this *Example 1,* except that, instead of selling the land to X, B transfers the land to X in a transaction to which section 351(a) applies and X remains a nonmember. There is no difference in Year 3 between B's $0 corresponding item taken into account and the $0 recomputed corresponding item. Thus, none of S's intercompany gain is taken into account under the matching rule as a result of the section 351(a) transfer. However, S's entire gain is taken into account in Year 3 under the acceleration rule of paragraph (d) of this section (because X, a nonmember, reflects B's $100 cost basis in the land under section 362).

Example 2. Dealer activities. (a) *Facts.* S holds land for investment with a basis of $70. On January 1 of Year 1, S sells the land to B for $100. B develops the land as residential real estate, and sells developed lots to customers during Year 3 for an aggregate amount of $110.

(b) *Attributes.* S and B are treated under the matching rule as divisions of a single corporation for purposes of determining the attributes of S's intercompany item and B's corresponding item. Thus, although S held the land for investment, whether the gain is treated as from the sale of property described in section 1221(1) is based on the activities of both S and B. If, based on both S's and B's activities, the land is described in section 1221(1), both S's gain and B's gain are ordinary income.

Example 3. Intercompany section 351 transfer. (a) *Facts.* S holds land with a $70 basis and a $100 fair market value for sale to customers in the ordinary course of business. On January 1 of Year 1, S transfers the land to B in exchange for all of the stock of B in a transaction to which section 351 applies. S has no gain or loss under section 351(a), and its basis in the B stock is $70 under section 358. Under section 362, B's basis in the land is $70. B holds the land for investment. On July 1 of Year 3, B sells the land to X for $100. Assume that if S and B were divisions of a single corporation, B's gain from the sale would be ordinary income because of S's activities.

(b) *Timing and attributes.* Under paragraph (b)(1) of this section, S's transfer to B is an intercompany transaction. Under paragraph (c)(3) of this section, S is treated as transferring the land in exchange for B's stock even though, as divisions, S could not own stock of B. S has no intercompany item, but B's $30 gain from its sale of the land to X is a corresponding item because the land was acquired in an intercompany transaction. B's $30 gain is ordinary income that is taken into account under B's method of accounting.

(c) *Intercompany section 351 transfer with boot.* The facts are the same as in paragraph (a) of this *Example 3,* except that S receives $10 cash in addition to the B stock in the transfer. S recognizes $10 of gain under section 351(b), and its basis in the B stock is $70 under section 358. Under section 362, B's basis in the land is $80. S takes its $10 intercompany gain into account in Year 3 to reflect the $10 difference between B's $20 corresponding gain taken into account and the $30 recomputed gain. Both S's $10 gain and B's $20 gain are ordinary income.

(d) *Partial disposition.* The facts are the same as in paragraph (c) of this *Example 3,* except B sells only a one- half, undivided interest in the land to X for $50. The timing and attributes are determined in the manner provided in paragraph (b) of this *Example 3,* except that S takes only $5 of its gain into account in Year 3 to reflect the $5 difference between B's $10 gain taken into account and the $15 recomputed gain.

Example 4. Depreciable property. (a) *Facts.* On January 1 of Year 1, S buys 10-year recovery property for $100 and depreciates it under the straight-line method. On January 1 of Year 3, S sells the property to B for $130. Under section 168(i)(7), B is treated as S for purposes of section 168 to the extent B's $130 basis does not exceed S's adjusted basis at the time of the sale. B's additional basis is treated as new 10-year recovery property for which B elects the straight-line method of recovery. (To simplify the example, the half-year convention is disregarded.)

(b) *Depreciation through Year 3; intercompany gain.* S claims $10 of depreciation for each of Years 1 and 2 and has an $80 basis at the time of the sale to B. Thus, S has a $50 intercompany gain from its sale to B. For Year 3, B has $10 of depreciation with respect to $80 of its basis (the portion of its $130 basis not exceeding S's adjusted basis). In addition, B has $5 of depreciation with respect to the $50 of its additional basis that exceeds S's adjusted basis.

(c) *Timing.* S's $50 gain is taken into account to reflect the difference for each consolidated return year between B's depreciation taken into account with respect to the property and the recomputed depreciation. For Year 3, B takes $15 of depreciation into account. If the intercompany transaction were a transfer between divisions of a single corporation, B would succeed to S's adjusted basis in the property and take into account only $10 of depreciation for Year 3. Thus, S takes $5 of gain into account in Year 3. In each subsequent year that B takes into account $15 of depreciation with respect to the property, S takes into account $5 of gain.

(d) *Attributes.* Under paragraph (c)(1)(i) of this section, the attributes of S's gain and B's depreciation must be redetermined to the extent necessary to produce the same effect on consolidated taxable income as if the intercompany transaction were between divisions of a single corporation (the group must have a net depreciation deduction of $10). In each year, $5 of B's corresponding depreciation deduction offsets S's $5 intercompany gain taken into account and, under paragraph (c)(4)(i) of this section, the attributes of B's corresponding item control the attributes of S's intercompany item. Accordingly, S's intercompany gain that is taken into account as a result of B's depreciation deduction is ordinary income.

(e) *Sale of property to a nonmember.* The facts are the same as in paragraph (a) of this *Example 4,* except that B sells the property to X on January 1 of Year 5 for $110. As set forth in paragraphs (c) and (d) of this *Example 4,* B has $15 of depreciation with respect to the property in each of Years 3 and 4, causing S to take $5 of intercompany gain into account in each year as ordinary income. The $40 balance of S's intercompany gain is taken into account in Year 5 as a result of B's sale to X, to reflect the $40 difference between B's $10 gain taken into account and the $50 of recomputed gain ($110 of sale proceeds minus the $60 basis B would have if the intercompany sale were a transfer between divisions of a single corporation). Treating S and B as divisions of a single corporation, $40 of the gain is section 1245 gain and $10 is section 1231 gain. On a separate entity basis, S would have more than $10 treated as section 1231 gain, and B would have no amount treated as section 1231 gain. Under paragraph (c)(4)(ii) of this section, all $10 of the section 1231 gain is allocated to S. S's remaining $30 of gain, and all of B's $10 gain, is treated as section 1245 gain.

Example 5. Intercompany sale followed by installment sale. (a) *Facts.* S holds land for investment with a basis of $70x. On January 1 of Year 1, S sells the land to B for $100x. B also holds the land for investment. On July 1 of Year 3, B sells the land to X in exchange for X's $110x note. The note bears a market rate of interest in excess of the applicable Federal rate, and provides for principal payments of $55x in Year 4 and $55x in Year 5. The interest charge under section 453A(c) applies to X's note.

(b) *Timing and attributes.* S takes its $30x gain into account to reflect the difference in each consolidated return year between B's gain taken into account for the year and the recomputed gain. Under section 453, B takes into account $5x of gain in Year 4 and $5x of gain in Year 5. Thus, S takes into account $15x of gain in Year 4 and $15x of gain in Year 5 to reflect the $15x difference in each of those years between B's $5x gain taken into account and the $20x recomputed gain. Both S's $30x gain and B's $10x gain are subject to the section 453A(c) interest charge beginning in Year 3.

(c) *Election out under section 453(d).* If, under the facts in paragraph (a) of this *Example 5,* the P group wishes to elect not to apply section 453 with respect to S's gain, an election under section 453(d) must be made for Year 3 with respect to B's gain. This election will cause B's $10x gain to be taken into account in Year 3. Under the matching rule, this will result in S's $30x gain being taken into account in Year 3. (An election by the P group solely with respect to S's gain has no effect because the gain from S's sale to B is taken into account under the matching rule, and therefore must reflect the difference between B's gain taken into account and the recomputed gain.)

(d) *Sale to a nonmember at a loss, but overall gain.* The facts are the same as in paragraph (a) of this *Example 5,* except that B sells the land to X in exchange for X's $90x note (rather than $110x note). If S and B were divisions of a single corporation, B would succeed to S's basis in the land, and the sale to X would be eligible for installment reporting under section 453, because it resulted in an overall gain. However, because only gains may be reported on the installment method, B's $10x corresponding loss is taken into account in Year 3. Under paragraph (b)(4) of this section the recomputed corresponding item is $20x gain that would be taken into account under the installment method, $0 in Year 3 and $10x in each of Years 4 and 5. Thus, in Year 3 S takes $10x of gain into account to reflect the difference between B's $10x loss taken into account and the $0 recomputed gain for Year 3. Under paragraph (c)(4)(i) of this section, B's $10x corresponding loss offsets $10x of S's intercompany gain, and B's attributes control. S takes $10x of gain into account in each of Years 4 and 5 to reflect the difference in those years between B's $0 gain taken into account and the $10x recomputed gain that would be taken into account under the installment method. Only the $20x of S's gain taken into account in Years 4 and 5 is subject to the interest charge under section 453A(c) beginning in Year 3. (If P elects under section 453(d) for Year 3 not to apply section 453 with respect to the gain, all of S's $30x gain will be taken into account in Year 3 to reflect the difference between B's $10x loss taken into account and the $20x recomputed gain.)

(e) *Intercompany loss, installment gain.* The facts are the same as in paragraph (a) of this *Example 5,* except that S has a $130x (rather than $70x) basis in the land. Under paragraph (c)(1)(i) of this section, the separate entity attributes of S's and B's items from the intercompany transaction must be redetermined to produce the same effect on consolidated taxable income (and tax liability) as if the transaction had been a transfer between divisions. If S and B were divisions of a single corporation, B would succeed to S's basis in the land and the group would have $20x loss from the sale to X, installment reporting would be unavailable, and the interest charge under section 453A(c) would not apply. Accordingly, B's gain from the transaction is not eligible for installment treatment under section 453. B takes its $10x gain into account in Year 3, and S takes its $30x of loss into account in Year 3 to reflect the difference between B's $10x gain and the $20x recomputed loss.

(f) *Recapture income.* The facts are the same as in paragraph (a) of this *Example 5,* except that S bought depreciable property (rather than land) for $100x, claimed depreciation deductions, and reduced the property's basis to $70x before Year 1. (To simplify the example, B's depreciation is disregarded.) If the intercompany sale of property had been a transfer between divisions of a single corporation, $30x of the $40x gain from the sale to X would be section 1245 gain (which is ineligible for installment reporting) and $10x would be section 1231 gain (which is eligible for installment reporting). On a separate entity basis, S would have $30x of section 1245 gain and B would have $10x of section 1231 gain. Accordingly, the attributes are not redetermined under paragraph (c)(1)(i) of this section. All of B's $10x gain is eligible for installment reporting and is taken into account $5x each in Years 4 and 5 (and is subject to the interest charge under section 453A(c)). S's $30x gain is taken into account in Year 3 to reflect the difference between B's $0 gain taken into account and the $30x of recomputed gain. (If S had bought the depreciable property for $110x and its recomputed basis under section 1245 had been $110x (rather than $100x), B's $10x gain and S's $30x gain would both be recapture income ineligible for installment reporting.)

Example 6. Intercompany sale of installment obligation. (a) *Facts.* S holds land for investment with a basis of $70x. On January 1 of Year 1, S sells the land to X in exchange for X's $100x note, and S reports its gain on the installment method under section 453. X's note bears interest at a market rate of interest in excess of the applicable Federal rate, and provides for principal payments of $50x in Year 5 and $50x in Year 6. Section 453A applies to X's note. On July 1 of Year 3, S sells X's note to B for $100x, resulting in $30x gain from S's prior sale of the land to X under section 453B(a).

(b) *Timing and attributes.* S's sale of X's note to B is an intercompany transaction, and S's $30x gain is intercompany gain. S takes $15x of the gain into account in each of Years 5 and 6 to reflect the $15x difference in each year between B's $0 gain taken into account and the $15x recomputed gain. S's gain continues to be treated as its gain from the sale to X, and the deferred tax liability remains subject to the interest charge under section 453A(c).

(c) *Worthlessness.* The facts are the same as in paragraph (a) of this *Example 6,* except that X's note becomes worthless on December 1 of Year 3 and B has a $100x short-term capital loss under section 165(g) on a separate entity basis. Under paragraph (c)(1)(ii) of this section, B's holding period for X's note is aggregated with S's holding period. Thus, B's loss is a long- term capital loss. S takes its $30x gain into account in Year 3 to reflect the $30x difference between B's $100x loss taken into account and the $70x recomputed loss. Under paragraph (c)(1)(i) of this section, S's gain is long-term capital gain.

(d) *Pledge.* The facts are the same as in paragraph (a) of this *Example 6,* except that, on December 1 of Year 3, B borrows $100x from an unrelated bank and secures the indebtedness with X's note. X's note remains subject to section 453A(d) following the sale to B. Under section 453A(d), B's $100x of proceeds from the secured indebtedness is treated as an amount received on December 1 of Year 3 by B on X's note. Thus, S takes its entire $30x gain into account in Year 3.

Example 7. Performance of services. (a) *Facts.* S is a driller of water wells. B operates a ranch in a remote location, and B's taxable income from the ranch is not subject to section 447. B's ranch requires water to maintain its cattle. During Year 1, S drills an artesian well on B's ranch in exchange for $100 from B, and S incurs $80 of expenses (e.g., for employees and equipment). B capitalizes its $100 cost for the well under section 263, and takes into account $10 of cost recovery deductions in each of Years 2 through 11. Under its separate entity method of accounting, S would take its income and expenses into account in Year 1. If S and B were divisions of a single corporation, the costs incurred in drilling the well would be capitalized.

(b) *Definitions.* Under paragraph (b)(1) of this section, the service transaction is an intercompany transaction, S is the selling member, and B is the buying member. Under paragraph (b)(2)(ii) of this section, S's $100 of income and $80 of related expenses are both included in determining its intercompany income of $20.

(c) *Timing and attributes.* S's $20 of intercompany income is taken into account under the matching rule to reflect the $20 difference between B's corresponding items taken into account (based on its $100 cost basis in the well) and the recomputed corresponding items (based on the $80 basis that B would have if S and B were divisions of a single corporation and B's basis were determined by reference to S's $80 of expenses). In Year 1, S takes into account $80 of its income and the $80 of expenses. In each of Years 2 through 11, S takes $2 of its $20 intercompany income into account to reflect the annual $2 difference between B's $10 of cost recovery deductions taken into account and the $8 of recomputed cost recovery deductions. S's $100 income and $80 expenses, and B's cost recovery deductions, are ordinary items (because S's and B's items would be ordinary on a separate entity basis, the attributes are not redetermined under paragraph (c)(1)(i) of this section). If S's offsetting $80 of income and expense would not be taken into account in the same year under its separate entity method of accounting, they nevertheless must be taken into account under this section in a manner that clearly reflects consolidated taxable income. See paragraph (a)(3)(i) of this section.

(d) *Sale of capitalized services.* The facts are the same as in paragraph (a) of this *Example 7,* except that B sells the ranch before Year 11 and recognizes gain attributable to the well. To the extent of S's income taken into account as a result of B's cost recovery deductions, as well as S's offsetting $80 of income and expense, the timing and attributes are determined in the manner provided in paragraph (c) of this *Example 7.* The attributes of the remainder of S's $20 of income and B's gain from the sale are redetermined to produce the same effect on consolidated taxable income as if S and B were divisions of a single corporation. Accordingly, S's remaining intercompany income is treated as recapture income or section 1231 gain, even though it is from S's performance of services.

Example 8. Rental of property. B operates a ranch that requires grazing land for its cattle. S owns undeveloped land adjoining B's ranch. On January 1 of Year 1, S leases grazing rights to B for Year 1. B's $100 rent expense is deductible for Year 1 under its separate entity accounting method. Under paragraph (b)(1) of this section, the rental transaction is an intercompany transaction, S is the selling member, and B is the buying

member. S takes its $100 of income into account in Year 1 to reflect the $100 difference between B's rental deduction taken into account and the $0 recomputed rental deduction. S's income and B's deduction are ordinary items (because S's intercompany item and B's corresponding item would both be ordinary on a separate entity basis, the attributes are not redetermined under paragraph (c)(1)(i) of this section).

Example 9. Intercompany sale of a partnership interest. (a) *Facts.* S owns a 20% interest in the capital and profits of a general partnership. The partnership holds land for investment with a basis equal to its value, and operates depreciable assets which have value in excess of basis. S's basis in its partnership interest equals its share of the adjusted basis of the partnership's land and depreciable assets. The partnership has an election under section 754 in effect. On January 1 of Year 1, S sells its partnership interest to B at a gain. During Years 1 through 10, the partnership depreciates the operating assets, and B's depreciation deductions from the partnership reflect the increase in the basis of the depreciable assets under section 743(b).

(b) *Timing and attributes.* S's gain is taken into account during Years 1 through 10 to reflect the difference in each year between B's depreciation deductions from the partnership taken into account and the recomputed depreciation deductions from the partnership. Under paragraphs (c)(1)(i) and (c)(4)(i) of this section, S's gain taken into account is ordinary income. (The acceleration rule does not apply to S's gain as a result of the section 743(b) adjustment, because the adjustment is solely with respect to B and therefore no nonmember reflects any part of the intercompany transaction.)

(c) *Partnership sale of assets.* The facts are the same as in paragraph (a) of this *Example 9,* and the partnership sells some of its depreciable assets to X at a gain on December 31 of Year 4. In addition to the intercompany gain taken into account as a result of the partnership's depreciation, S takes intercompany gain into account in Year 4 to reflect the difference between B's partnership items taken into account from the sale (which reflect the basis increase under section 743(b)) and the recomputed partnership items. The attributes of S's additional gain are redetermined to produce the same effect on consolidated taxable income as if S and B were divisions of a single corporation (recapture income or section 1231 gain).

(d) *B's sale of partnership interest.* The facts are the same as in paragraph (a) of this *Example 9,* and on December 31 of Year 4, B sells its partnership interest to X at no gain or loss. In addition to the intercompany gain taken into account as a result of the partnership's depreciation, the remaining balance of S's intercompany gain is taken into account in Year 4 to reflect the difference between B's $0 gain taken into account from the sale of the partnership interest and the recomputed gain. The character of S's remaining intercompany item and B's corresponding item are determined on a separate entity basis under section 751, and then redetermined to the extent necessary to produce the same effect as treating the intercompany transaction as occurring between divisions of a single corporation.

(e) *No section 754 election.* The facts are the same as in paragraph (d) of this *Example 9,* except that the partnership does not have a section 754 election in effect, and B recognizes a capital loss from its sale of the partnership interest to X on December 31 of Year 4. Because there is no difference between B's depreciation deductions from the partnership taken into account and the recomputed depreciation deductions, S does not take any of its gain into account during Years 1 through 4 as a result of B's partnership's items. Instead, S's entire intercompany gain is taken into account in Year 4 to reflect the difference between B's loss taken into account from the sale to X and the recomputed gain or loss.

Example 10. Net operating losses subject to section 382 or the SRLY rules. (a) *Facts.* On January 1 of Year 1, P buys all of S's stock. S has net operating loss carryovers from prior years. P's acquisition results in an ownership change under section 382 with respect to S's loss carryovers, and S has a net unrealized built-in gain (within the meaning of section 382(h)(3)). S owns nondepreciable property with a $70 basis and $100 value. On July 1 of Year 3, S sells the property to B for $100, and its $30 gain is recognized built-in gain (within the meaning of section 382(h)(2)) on a separate entity basis. On December 1 of Year 5, B sells the property to X for $90.

(b) *Timing and attributes.* S's $30 gain is taken into account in Year 5 to reflect the $30 difference between B's $10 loss taken into account and the recomputed $20 gain. S and B are treated as divisions of a single corporation for purposes of applying section 382 in connection with the intercompany transaction. Under a single entity analysis, the single corporation has losses subject to limitation under section 382, and this limitation may be increased under section 382(h) if the single corporation has recognized built-in gain with respect to those losses. B's $10 corresponding loss offsets $10 of S's intercompany gain, and thus, under paragraph (c)(4)(i) of this section, $10 of S's intercompany gain is redetermined not to be recognized built-in gain. S's remaining $20 intercompany gain continues to be treated as recognized built-in gain.

(c) *B's recognized built-in gain.* The facts are the same as in paragraph (a) of this *Example 10,* except that the property declines in value after S becomes a member of the P group, S sells the property to B for its $70 basis, and

B sells the property to X for $90 during Year 5. Treating S and B as divisions of a single corporation, S's sale to B does not cause the property to cease to be built-in gain property. Thus, B's $20 gain from its sale to X is recognized built-in gain that increases the section 382 limitation applicable to S's losses.

(d) *SRLY limitation*. The facts are the same as in paragraph (a) of this *Example 10*, except that P's acquisition of S is not subject to the overlap rule of §1.1502–21(g), and S's net operating loss carryovers are subject to the separate return limitation year (SRLY) rules. See §1.1502–21(c). The application of the SRLY rules depends on S's status as a separate corporation having losses from separate return limitation years. Under paragraph (c)(5), the attribute of S's intercompany item as it relates to S's SRLY limitation is not redetermined, because the SRLY limitation depends on S's special status. Accordingly, S's $30 intercompany gain is included in determining its SRLY limitation for Year 5.

Example 11. Section 475. (a) *Facts*. S, a dealer in securities within the meaning of section 475(c), owns a security with a basis of $70. The security is held for sale to customers and is not identified under section 475(b) as within an exception to marking to market. On July 1 of Year 1, S sells the security to B for $100. B is not a dealer and holds the security for investment. On December 31 of Year 1, the fair market value of the security is $100. On July 1 of Year 2, B sells the security to X for $110.

(b) *Attributes*. Under section 475, a dealer in securities can treat a security as within an exception to marking to market under section 475(b) only if it timely identifies the security as so described. Under the matching rule, attributes must be redetermined by treating S and B as divisions of a single corporation. As a result of S's activities, the single corporation is treated as a dealer with respect to securities, and B must continue to mark to market the security acquired from S. Thus, B's corresponding items and the recomputed corresponding items are determined by continuing to treat the security as not within an exception to marking to market. Under section 475(d)(3), it is possible for the character of S's intercompany items to differ from the character of B's corresponding items.

(c) *Timing and character*. S has a $30 gain when it disposes of the security by selling it to B. This gain is intercompany gain that is taken into account in Year 1 to reflect the $30 difference between B's $0 gain taken into account from marking the security to market under section 475 and the recomputed $30 gain that would be taken into account. The character of S's gain and B's gain are redetermined as if the security were transferred between divisions. Accordingly, S's gain is ordinary income under section 475(d)(3)(A)(i), but under section 475(d)(3)(B)(ii) B's $10 gain from its sale to X is capital gain that is taken into account in Year 2.

(d) *Nondealer to dealer*. The facts are the same as in paragraph (a) of this Example 11, except that S is not a dealer and holds the security for investment with a $70 basis, B is a dealer to which section 475 applies and, immediately after acquiring the security from S for $100, B holds the security for sale to customers in the ordinary course of its trade or business. Because S is not a dealer and held the security for investment, the security is treated as properly identified as held for investment under section 475(b)(1) until it is sold to B. Under section 475(b)(3), the security thereafter ceases to be described in section 475(b)(1) because B holds the security for sale to customers. The mark-to-market requirement applies only to changes in the value of the security after B's acquisition. B's mark-to-market gain taken into account and the recomputed mark-to-market gain are both determined based on changes from the $100 value of the security at the time of B's acquisition. There is no difference between B's $0 mark-to-market gain taken into account in Year 1 and the $0 recomputed mark-to-market gain. Therefore, none of S's gain is taken into account in Year 1 as a result of B's marking the security to market in Year 1. In Year 2, B has a $10 gain when it disposes of the security by selling it to X, but would have had a $40 gain if S and B were divisions of a single corporation. Thus, S takes its $30 gain into account in Year 2 under the matching rule. Under section 475(d)(3), S's gain is capital gain even though B's subsequent gain or loss from marking to market or disposing of the security is ordinary gain or loss. If B disposes of the security at a $10 loss in Year 2, S's gain taken into account in Year 2 is still capital because on a single entity basis section 475(d)(3) would provide for $30 of capital gain and $10 of ordinary loss. Because the attributes are not redetermined under paragraph (c)(1)(i) of this section, paragraph (c)(4)(i) of this section does not apply. Furthermore, if B held the security for investment, and so identified the security under section 475(b)(1), the security would continue to be excepted from marking to market.

Example 12. Section 1092. (a) *Facts*. On July 1 of Year 1, S enters into offsetting long and short positions with respect to actively traded personal property. The positions are not section 1256 contracts, and they are the only positions taken into account for purposes of applying section 1092. On August 1 of Year 1, S sells the long position to B at an $11 loss, and there is $11 of unrealized gain in the offsetting short position. On December 1 of Year 1, B sells the long position to X at no gain or loss. On December 31 of Year 1, there

is still $11 of unrealized gain in the short position. On February 1 of Year 2, S closes the short position at an $11 gain.

(b) *Timing and attributes.* If the sale from S to B were a transfer between divisions of a single corporation, the $11 loss on the sale to X would have been deferred under section 1092(a)(1)(A). Accordingly, there is no difference in Year 1 between B's corresponding item of $0 and the recomputed corresponding item of $0. S takes its $11 loss into account in Year 2 to reflect the difference between B's corresponding item of $0 taken into account in Year 2 and the recomputed loss of $11 that would have been taken into account in Year 2 under section 1092(a)(1)(B) if S and B had been divisions of a single corporation. (The results are the same under section 267(f)).

Example 13. Manufacturer incentive payments. (a) *Facts.* B is a manufacturer that sells its products to independent dealers for resale. S is a credit company that offers financing, including financing to customers of the dealers. S also purchases the product from the dealers for lease to customers of the dealers. During Year 1, B initiates a program of incentive payments to the dealers' customers. Under B's program, S buys a product from an independent dealer for $100 and leases it to a nonmember. S pays $90 to the dealer for the product, and assigns to the dealer its $10 incentive payment from B. Under their separate entity accounting methods, B would deduct the $10 incentive payment in Year 1 and S would take a $90 basis in the product. Assume that if S and B were divisions of a single corporation, the $10 payment would not be deductible and the basis of the property would be $100.

(b) *Timing and attributes.* Under paragraph (b)(1) of this section, the incentive payment transaction is an intercompany transaction. Under paragraph (b)(2)(iii) of this section, S has a $10 intercompany item not yet taken into account under its separate entity method of accounting. Under the matching rule, S takes its intercompany item into account to reflect the difference between B's corresponding item taken into account and the recomputed corresponding item. In Year 1 there is a $10 difference between B's $10 deduction taken into account and the $0 recomputed deduction. Accordingly, under the matching rule S must take the $10 incentive payment into account as intercompany income in Year 1. S's $10 of income and B's $10 deduction are ordinary items. S's basis in the product is $100 rather than the $90 it would be under S's separate entity method of accounting. S's additional $10 of basis in the product is recovered based on subsequent events (e.g., S's cost recovery deductions or its sale of the product).

Example 14. Source of income under section 863. (a) *Intercompany sale with no independent factory price.* S manufactures inventory in the United States, and recognizes $75 of income on sales to B in Year 1. B distributes the inventory in Country Y and recognizes $25 of income on sales to X, also in Year 1. Title passes from S to B, and from B to X, in Country Y. There is no independent factory price (as defined in regulations under section 863) for the sale from S to B. Under the matching rule, S's $75 intercompany income and B's $25 corresponding income are taken into account in Year 1. In determining the source of income, S and B are treated as divisions of a single corporation, and section 863 applies as if $100 of income were recognized from producing in the United States and selling in Country Y. Assume that applying the section 863 regulations on a single entity basis, $50 is treated as foreign source income and $50 as U.S. source income. Assume further that on a separate entity basis, S would have $37.50 of foreign source income and $37.50 of U.S. source income, and that all of B's $25 of income would be foreign source income. Thus, on a separate entity basis, S and B would have $62.50 of combined foreign source income and $37.50 of U.S. source income. Accordingly, under single entity treatment, $12.50 that would be treated as foreign source income on a separate entity basis is redetermined to be U.S. source income. Under paragraph (c)(1)(i) of this section, attributes are redetermined only to the extent of the $12.50 necessary to achieve the same effect as a single entity determination. Under paragraph (c)(4)(ii) of this section, the redetermined attribute must be allocated between S and B using a reasonable method. For example, it may be reasonable to recharacterize only S's foreign source income as U.S. source income because only S would have any U.S. source income on a separate entity basis. However, it may also be reasonable to allocate the redetermined attribute between S and B in proportion to their separate entity amounts of foreign source income (in a 3:2 ratio, so that $7.50 of S's foreign source income is redetermined to be U.S. source and $5 of B's foreign source income is redetermined to be U.S. source), provided the same method is applied to all similar transactions within the group.

(b) *Intercompany sale with independent factory price.* The facts are the same as in paragraph (a) of this *Example 14,* except that an independent factory price exists for the sale by S to B such that $70 of S's $75 of income is attributable to the production function. Assume that on a single entity basis, $70 is treated as U.S. source income (because of the existence of the independent factory price) and $30 is treated as foreign source income. Assume that on a separate entity basis, $70 of S's income would be treated as U.S. source, $5 of S's income would be treated as foreign source income, and all of B's $25 income would be treated as foreign source income. Because the results are the same on a

single entity basis and a separate entity basis, the attributes are not redetermined under paragraph (c)(1)(i) of this section.

(c) *Sale of property reflecting intercompany services or intangibles.* S earns $10 of income performing services in the United States for B. B capitalizes S's fees into the basis of property that it manufactures in the United States and sells to an unrelated person in Year 1 at a $90 profit, with title passing in Country Y. Under the matching rule, S's $10 income and B's $90 income are taken into account in Year 1. In determining the source of income, S and B are treated as divisions of a single corporation, and section 863 applies as if $100 were earned from manufacturing in the United States and selling in Country Y. Assume that on a single entity basis $50 is treated as foreign source income and $50 is treated as U.S. source income. Assume that on a separate entity basis, S would have $10 of U.S. source income, and B would have $45 of foreign source income and $45 of U.S. source income. Accordingly, under single entity treatment, $5 of income that would be treated as U.S. source income on a separate entity basis is redetermined to be foreign source income. Under paragraph (c)(1)(i) of this section, attributes are redetermined only to the extent of the $5 necessary to achieve the same effect as a single entity determination. Under paragraph (c)(4)(ii) of this section, the redetermined attribute must be allocated between S and B using a reasonable method. (If instead of performing services, S licensed an intangible to B and earned $10 that would be treated as U.S. source income on a separate entity basis, the results would be the same.)

Example 15. Section 1248. (a) *Facts.* On January 1 of Year 1, S forms FT, a wholly owned foreign subsidiary, with a $10 contribution. During Years 1 through 3, FT has earnings and profits of $40. None of the earnings and profits is taxed as subpart F income under section 951, and FT distributes no dividends to S during this period. On January 1 of Year 4, S sells its FT stock to B for $50. While B owns FT, FT has a deficit in earnings and profits of $10. On July 1 of Year 6, B sells its FT stock for $70 to X, an unrelated foreign corporation.

(b) *Timing.* S's $40 of intercompany gain is taken into account in Year 6 to reflect the difference between B's $20 of gain taken into account and the $60 recomputed gain.

(c) *Attributes.* Under the matching rule, the attributes of S's intercompany gain and B's corresponding gain are redetermined to have the same effect on consolidated taxable income (and consolidated tax liability) as if S and B were divisions of a single corporation. On a single entity basis, there is $60 of gain and the portion which is characterized as a dividend under section 1248 is determined on the basis of FT's $30 of earnings and profits at the time of the sale of FT to X (the sum of FT's $40 of earnings and profits while held by S and FT's $10 deficit in earnings and profits while held by B). Therefore, $30 of the $60 gain is treated as a dividend under section 1248. The remaining $30 is treated as capital gain. On a separate entity basis, all of S's $40 gain would be treated as a dividend under section 1248 and all of B's $20 gain would be treated as capital gain. Thus, as a result of the single entity determination, $10 that would be treated as a dividend under section 1248 on a separate entity basis is redetermined to be capital gain. Under paragraph (c)(4)(ii) of this section, this redetermined attribute must be allocated between S's intercompany item and B's corresponding item by using a reasonable method. On a separate entity basis, only S would have any amount treated as a dividend under section 1248 available for redetermination. Accordingly, $10 of S's income is redetermined to be not subject to section 1248, with the result that $30 of S's intercompany gain is treated as a dividend and the remaining $10 is treated as capital gain. All of B's corresponding gain is treated as capital gain, as it would be on a separate entity basis.

(d) *B has loss.* The facts are the same as in paragraph (a) of this *Example 15,* except that FT has no earnings and profits or deficit in earnings and profits while B owns FT, and B sells the FT stock to X for $40. On a single entity basis, there is $30 of gain, and section 1248 is applied on the basis of FT's $40 earnings and profits at the time of the sale of FT to X. Under section 1248, the amount treated as a dividend is limited to $30 (the amount of the gain). On a separate entity basis, S's entire $40 gain would be treated as a dividend under section 1248, and B's $10 loss would be a capital loss. B's $10 corresponding loss offsets $10 of S's intercompany gain and, under paragraph (c)(4)(i) of this section, the attributes of B's corresponding item control. Accordingly, $10 of S's gain must be redetermined to be capital gain. B's $10 loss remains a capital loss. (If, however, S sold FT to B at a loss and B sold FT to X at a gain, it may be unreasonable for the attributes of B's corresponding gain to control S's offsetting intercompany loss. If B's attributes were to control, for example, the group could possibly claim a larger foreign tax credit than would be available if S and B were divisions of a single corporation.)

(d) *Acceleration rule.* S's intercompany items and B's corresponding items are taken into account under this paragraph (d) to the extent they cannot be taken into account to produce the effect of treating S and B as divisions of a single corporation. For this purpose, the following rules apply:

(1) *S's items*—(i) *Timing.* S takes its intercompany items into account to

the extent they cannot be taken into account to produce the effect of treating S and B as divisions of a single corporation. The items are taken into account immediately before it first becomes impossible to achieve this effect. For this purpose, the effect cannot be achieved—

(A) To the extent an intercompany item or corresponding item will not be taken into account in determining the group's consolidated taxable income (or consolidated tax liability) under the matching rule (for example, if S or B becomes a nonmember, or if S's intercompany item is no longer reflected in the difference between B's basis (or an amount equivalent to basis) in property and the basis (or equivalent amount) the property would have if S and B were divisions of a single corporation); or

(B) To the extent a nonmember reflects, directly or indirectly, any aspect of the intercompany transaction (e.g., if B's cost basis in property purchased from S is reflected by a nonmember under section 362 following a section 351 transaction).

(ii) *Attributes*. The attributes of S's intercompany items taken into account under this paragraph (d)(1) are determined as follows:

(A) *Sale, exchange, or distribution*. If the item is from an intercompany sale, exchange, or distribution of property, its attributes are determined under the principles of the matching rule as if B sold the property, at the time the item is taken into account under paragraph (d)(1)(i) of this section, for a cash payment equal to B's adjusted basis in the property (i.e., at no net gain or loss), to the following person:

(*1*) *Property leaves the group*. If the property is owned by a nonmember immediately after S's item is taken into account, B is treated as selling the property to that nonmember. If the nonmember is related for purposes of any provision of the Internal Revenue Code or regulations to any party to the intercompany transaction (or any related transaction) or to the common parent, the nonmember is treated as related to B for purposes of that provision. For example, if the nonmember is related to P within the meaning of section 1239(b), the deemed sale is treated as being described in section 1239(a). See paragraph (j)(6) of this section, under which property is not treated as being owned by a nonmember if it is owned by the common parent after the common parent becomes the only remaining member.

(*2*) *Property does not leave the group*. If the property is not owned by a nonmember immediately after S's item is taken into account, B is treated as selling the property to an affiliated corporation that is not a member of the group.

(B) *Other transactions*. If the item is from an intercompany transaction other than a sale, exchange, or distribution of property (e.g., income from S's services capitalized by B), its attributes are determined on a separate entity basis.

(2) *B's items*—(i) *Attributes*. The attributes of B's corresponding items continue to be redetermined under the principles of the matching rule, with the following adjustments:

(A) If S and B continue to join with each other in the filing of consolidated returns, the attributes of B's corresponding items (and any applicable holding periods) are determined by continuing to treat S and B as divisions of a single corporation.

(B) Once S and B no longer join with each other in the filing of consolidated returns, the attributes of B's corresponding items are determined as if the S division (but not the B division) were transferred by the single corporation to an unrelated person. Thus, S's activities (and any applicable holding period) before the intercompany transaction continue to affect the attributes of the corresponding items (and any applicable holding period).

(ii) *Timing*. If paragraph (d)(1) of this section applies to S, B nevertheless continues to take its corresponding items into account under its accounting method. However, the redetermination of the attributes of a corresponding item under this paragraph (d)(2) might affect its timing.

(3) *Examples*. The acceleration rule of this paragraph (d) is illustrated by the following examples.

Example 1. Becoming a nonmember—timing. (a) *Facts*. S owns land with a basis of $70. On January 1 of Year 1, S sells the land to B for

$100. On July 1 of Year 3, P sells 60% of S's stock to X for $60 and, as a result, S becomes a nonmember.

(b) *Matching rule.* Under the matching rule, none of S's $30 gain is taken into account in Years 1 through 3 because there is no difference between B's $0 gain or loss taken into account and the recomputed gain or loss.

(c) *Acceleration of S's intercompany items.* Under the acceleration rule of paragraph (d) of this section, S's $30 gain is taken into account in computing consolidated taxable income (and consolidated tax liability) immediately before the effect of treating S and B as divisions of a single corporation cannot be produced. Because the effect cannot be produced once S becomes a nonmember, S takes its $30 gain into account in Year 3 immediately before becoming a nonmember. S's gain is reflected under §1.1502–32 in P's basis in the S stock immediately before P's sale of the stock. Under §1.1502–32, P's basis in the S stock is increased by $30, and therefore P's gain is reduced (or loss is increased) by $18 (60% of $30). See also §§1.1502–33 and 1.1502–76(b). (The results would be the same if S sold the land to B in an installment sale to which section 453 would otherwise apply, because S must take its intercompany gain into account under this section.)

(d) *B's corresponding items.* Notwithstanding the acceleration of S's gain, B continues to take its corresponding items into account under its accounting method. Thus, B's items from the land are taken into account based on subsequent events (e.g., its sale of the land).

(e) *Sale of B's stock.* The facts are the same as in paragraph (a) of this *Example 1,* except that P sells 60% of B's stock (rather than S stock) to X for $60 and, as a result, B becomes a nonmember. Because the effect of treating S and B as divisions of a single corporation cannot be produced once B becomes a nonmember, S takes its $30 gain into account under the acceleration rule immediately before B becomes a nonmember. (The results would be the same if S sold the land to B in an installment sale to which section 453 would otherwise apply, because S must take its intercompany gain into account under this section.)

(f) *Discontinue filing consolidated returns.* The facts are the same as in paragraph (a) of this *Example 1,* except that the P group receives permission under §1.1502–75(c) to discontinue filing consolidated returns beginning in Year 3. Under the acceleration rule, S takes its $30 gain into account on December 31 of Year 2.

(g) *No subgroups.* The facts are the same as in paragraph (a) of this *Example 1,* except that P simultaneously sells all of the stock of both S and B to X (rather than 60% of S's stock), and S and B become members of the X consolidated group. Because the effect of treating S and B as divisions of a single corporation in the P group cannot be produced once S and B become nonmembers, S takes its $30 gain into account under the acceleration rule immediately before S and B become nonmembers. (Paragraph (j)(5) of this section does not apply to treat the X consolidated group as succeeding to the P group because the X group acquired only the stock of S and B.) However, so long as S and B continue to join with each other in the filing of consolidated returns, B continues to treat S and B as divisions of a single corporation for purposes of determining the attributes of B's corresponding items from the land.

Example 2. Becoming a nonmember—attributes. (a) *Facts.* S holds land for investment with a basis of $70. On January 1 of Year 1, S sells the land to B for $100. B holds the land for sale to customers in the ordinary course of business, and expends substantial resources over a two-year period subdividing, developing, and marketing the land. On July 1 of Year 3, before B has sold any of the land, P sells 60% of S's stock to X for $60 and, as a result, S becomes a nonmember.

(b) *Attributes.* Under the acceleration rule, the attributes of S's gain are redetermined under the principles of the matching rule as if B sold the land to an affiliated corporation that is not a member of the group for a cash payment equal to B's adjusted basis in the land (because the land continues to be held within the group). Thus, whether S's gain is capital gain or ordinary income depends on the activities of both S and B. Because S and B no longer join with each other in the filing of consolidated returns, the attributes of B's corresponding items (e.g., from its subsequent sale of the land) are redetermined under the principles of the matching rule as if the S division (but not the B division) were transferred by the single corporation to an unrelated person at the time of P's sale of the S stock. Thus, B continues to take into account the activities of S with respect to the land before the intercompany transaction.

(c) *Depreciable property.* The facts are the same as in paragraph (a) of this *Example 2,* except that the property sold by S to B is depreciable property. Section 1239 applies to treat all of S's gain as ordinary income because it is taken into account as a result of B's deemed sale of the property to a affiliated corporation that is not a member of the group (a related person within the meaning of section 1239(b)).

Example 3. Selling member's disposition of installment note. (a) *Facts.* S owns land with a basis of $70. On January 1 of Year 1, S sells the land to B in exchange for B's $110 note. The note bears a market rate of interest in excess of the applicable Federal rate, and provides for principal payments of $55 in

Year 4 and $55 in Year 5. On July 1 of Year 3, S sells B's note to X for $110.

(b) *Timing.* S's intercompany gain is taken into account under this section, and not under the rules of section 453. Consequently, S's sale of B's note does not result in its intercompany gain from the land being taken into account (e.g., under section 453B). The sale does not prevent S's intercompany items and B's corresponding items from being taken into account in determining the group's consolidated taxable income under the matching rule, and X does not reflect any aspect of the intercompany transaction (X has its own cost basis in the note). S will take the intercompany gain into account under the matching rule or acceleration rule based on subsequent events (e.g., B's sale of the land). See also paragraph (g) of this section for additional rules applicable to B's note as an intercompany obligation.

Example 4. Cancellation of debt and attribute reduction under section 108(b). (a) *Facts.* S holds land for investment with a basis of $0. On January 1 of Year 1, S sells the land to B for $100. B also holds the land for investment. During Year 3, B is insolvent and B's nonmember creditors discharge $60 of B's indebtedness. Because of insolvency, B's $60 discharge is excluded from B's gross income under section 108(a), and B reduces the basis of the land by $60 under sections 108(b) and 1017.

(b) *Acceleration rule.* As a result of B's basis reduction under section 1017, $60 of S's intercompany gain will not be taken into account under the matching rule (because there is only a $40 difference between B's $40 basis in the land and the $0 basis the land would have if S and B were divisions of a single corporation). Accordingly, S takes $60 of its gain into account under the acceleration rule in Year 3. S's gain is long-term capital gain, determined under paragraph (d)(1)(ii) of this section as if B sold the land to an affiliated corporation that is not a member of the group for $100 immediately before the basis reduction.

(c) *Purchase price adjustment.* Assume instead that S sells the land to B in exchange for B's $100 purchase money note, B remains solvent, and S subsequently agrees to discharge $60 of the note as a purchase price adjustment to which section 108(e)(5) applies. Under applicable principles of tax law, $60 of S's gain and $60 of B's basis in the land are eliminated and never taken into account. Similarly, the note is not treated as satisfied and reissued under paragraph (g) of this section.

Example 5. Section 481. (a) *Facts.* S operates several trades or businesses, including a manufacturing business. S receives permission to change its method of accounting for valuing inventory for its manufacturing business. S increases the basis of its ending inventory by $100, and the related $100 positive section 481(a) adjustment is to be taken into account ratably over six taxable years, beginning in Year 1. During Year 3, S sells all of the assets used in its manufacturing business to B at a gain. Immediately after the transfer, B does not use the same inventory valuation method as S. On a separate entity basis, S's sale results in an acceleration of the balance of the section 481(a) adjustment to Year 3.

(b) *Timing and attributes.* Under paragraph (b)(2) of this section, the balance of S's section 481(a) adjustment accelerated to Year 3 is intercompany income. However, S's $100 basis increase before the intercompany transaction eliminates the related difference for this amount between B's corresponding items taken into account and the recomputed corresponding items in subsequent periods. Because the accelerated section 481(a) adjustment will not be taken into account in determining the group's consolidated taxable income (and consolidated tax liability) under the matching rule, the balance of S's section 481 adjustment is taken into account under the acceleration rule as ordinary income at the time of the intercompany transaction. (If S's sale had not resulted in accelerating S's section 481(a) adjustment on a separate entity basis, S would have no intercompany income to be taken into account under this section.)

(e) *Simplifying rules*—(1) *Dollar-value LIFO inventory methods*—(i) *In general.* This paragraph (e)(1) applies if either S or B uses a dollar-value LIFO inventory method to account for intercompany transactions. Rather than applying the matching rule separately to each intercompany inventory transaction, this paragraph (e)(1) provides methods to apply an aggregate approach that is based on dollar-value LIFO inventory accounting. Any method selected under this paragraph (e)(1) must be applied consistently.

(ii) *B uses dollar-value LIFO*—(A) *In general.* If B uses a dollar-value LIFO inventory method to account for its intercompany inventory purchases, and includes all of its inventory costs incurred for a year in its cost of goods sold for the year (that is, B has no inventory increment for the year), S takes into account all of its intercompany inventory items for the year. If B does not include all of its inventory costs incurred for the year in its cost of goods sold for the year (that is, B has an inventory increment for the year), S does not take all of its intercompany inventory income or loss into

account. The amount not taken into account is determined under either the increment averaging method of paragraph (e)(1)(ii)(B) of this section or the increment valuation method of paragraph (e)(1)(ii)(C) of this section. Separate computations are made for each pool of B that receives intercompany purchases from S, and S's amount not taken into account is layered based on B's LIFO inventory layers.

(B) *Increment averaging method.* Under this paragraph (e)(1)(ii)(B), the amount not taken into account is the amount of S's intercompany inventory income or loss multiplied by the ratio of the LIFO value of B's current-year costs of its layer of increment to B's total inventory costs incurred for the year under its LIFO inventory method. If B includes more than its inventory costs incurred during any subsequent year in its cost of goods sold (a decrement), S takes into account the intercompany inventory income or loss layers in the same manner and proportion as B takes into account its inventory decrements.

(C) *Increment valuation method.* Under this paragraph (e)(1)(ii)(C), the amount not taken into account is the amount of S's intercompany inventory income or loss for the appropriate period multiplied by the ratio of the LIFO value of B's current-year costs of its layer of increment to B's total inventory costs incurred in the appropriate period under its LIFO inventory method. The principles of paragraph (e)(1)(ii)(B) of this section otherwise apply. The appropriate period is the period of B's year used to determine its current-year costs.

(iii) *S uses dollar-value LIFO.* If S uses a dollar-value LIFO inventory method to account for its intercompany inventory sales, S may use any reasonable method of allocating its LIFO inventory costs to intercompany transactions. LIFO inventory costs include costs of prior layers if a decrement occurs. For example, a reasonable allocation of the most recent costs incurred during the consolidated return year can be used to compute S's intercompany inventory income or loss for the year if S has an inventory increment and uses the earliest acquisitions costs method, but S must apportion costs from the most recent appropriate layers of increment if an inventory decrement occurs for the year.

(iv) *Other reasonable methods.* S or B may use a method not specifically provided in this paragraph (e)(1) that is expected to reasonably take into account intercompany items and corresponding items from intercompany inventory transactions. However, if the method used results, for any year, in a cumulative amount of intercompany inventory items not taken into account by S that significantly exceeds the cumulative amount that would not be taken into account under paragraph (e)(1)(ii) or (iii) of this section, S must take into account for that year the amount necessary to eliminate the excess. The method is thereafter applied with appropriate adjustments to reflect the amount taken into account.

(v) *Examples.* The inventory rules of this paragraph (e)(1) are illustrated by the following examples.

Example 1. Increment averaging method. (a) *Facts.* Both S and B use a double-extension, dollar-value LIFO inventory method, and both value inventory increments using the earliest acquisitions cost valuation method. During Year 2, S sells 25 units of product Q to B on January 15 at $10/unit. S sells another 25 units on April 15, on July 15, and on September 15, at $12/unit. S's earliest cost of product Q is $7.50/unit and S's most recent cost of product Q is $8.00/unit. Both S and B have an inventory increment for the year. B's total inventory costs incurred during Year 2 are $6,000 and the LIFO value of B's Year 2 layer of increment is $600.

(b) *Intercompany inventory income.* Under paragraph (e)(1)(iii) of this section, S must use a reasonable method of allocating its LIFO inventory costs to intercompany transactions. Because S has an inventory increment for Year 2 and uses the earliest acquisitions cost method, a reasonable method of determining its intercompany cost of goods sold for product Q is to use its most recent costs. Thus, its intercompany cost of goods sold is $800 ($8.00 most recent cost, multiplied by 100 units sold to B), and its intercompany inventory income is $350 ($1,150 sales proceeds from B minus $800 cost).

(c) *Timing.* (i) Under the increment averaging method of paragraph (e)(1)(ii)(B) of this section, $35 of S's $350 of intercompany inventory income is not taken into account in Year 2, computed as follows:

$$\frac{\text{LIFO value of B's Year 2 layer of increment}}{\text{B's total inventory costs for Year 2}} = \frac{\$600}{\$6{,}000} = 10\%$$

$$10\% \times \text{S's \$350 intercompany inventory income} = \$35$$

(ii) Thus, $315 of S's intercompany inventory income is taken into account in Year 2 ($350 of total intercompany inventory income minus $35 not taken into account).

(d) *S incurs a decrement.* The facts are the same as in paragraph (a) of this *Example 1,* except that in Year 2, S incurs a decrement equal to 50% of its Year 1 layer. Under paragraph (e)(1)(iii) of this section, S must reasonably allocate the LIFO cost of the decrement to the cost of goods sold to B to determine S's intercompany inventory income.

(e) *B incurs a decrement.* The facts are the same as in paragraph (a) of this *Example 1,* except that B incurs a decrement in Year 2. S must take into account the entire $350 of Year 2 intercompany inventory income because all 100 units of product Q are deemed sold by B in Year 2.

Example 2. Increment valuation method. (a) The facts are the same as in Example 1. In addition, B's use of the earliest acquisition's cost method of valuing its increments results in B valuing its year-end inventory using costs incurred from January through March. B's costs incurred during the year are: $1,428 in the period January through March; $1,498 in the period April through June; $1,524 in the period July through September; and $1,550 in the period October through December. S's intercompany inventory income for these periods is: $50 in the period January through March ((25×$10)−(25×$8)); $100 in the period April through June ((25×$12)−(25×$8)); $100 in the period July through September ((25×$12)−(25×$8)); and $100 in the period October through December ((25×$12)−(25×$8)).

(b) *Timing.* (i) Under the increment valuation method of paragraph (e)(1)(ii)(C) of this section, $21 of S's $350 of intercompany inventory income is not taken into account in Year 2, computed as follows:

$$\frac{\text{LIFO value of B's Year 2 layer of increment}}{\text{B's total inventory costs from January through March of Year 2}} = \frac{\$600}{\$1{,}428} = 42\%$$

$$42\% \times \text{S's \$50 intercompany inventory income for the period from January through March} = \$21$$

(ii) Thus, $329 of S's intercompany inventory income is taken into account in Year 2 ($350 of total intercompany inventory income minus $21 not taken into account).

(c) *B incurs a subsequent decrement.* The facts are the same as in paragraph (a) of this *Example 2.* In addition, assume that in Year 3, B experiences a decrement in its pool that receives intercompany purchases from S. B's decrement equals 20% of the base-year costs for its Year 2 layer. The fact that B has incurred a decrement means that all of its inventory costs incurred for Year 3 are included in cost of goods sold. As a result, S takes into account its entire amount of intercompany inventory income from its Year 3 sales. In addition, S takes into account $4.20 of its Year 2 layer of intercompany inventory income not already taken into account (20% of $21).

Example 3. Other reasonable inventory methods. (a) *Facts.* Both S and B use a dollar-value LIFO inventory method for their inventory transactions. During Year 1, S sells inventory to B and to X. Under paragraph (e)(1)(iv) of this section, to compute its intercompany inventory income and the amount of this income not taken into account, S computes its intercompany inventory income using the transfer price of the inventory items less a FIFO cost for the goods, takes into account these items based on a FIFO cost flow assumption for B's corresponding items, and the LIFO methods used by S and B are ignored for these computations. These computations are comparable to the methods used by S and B for financial reporting purposes, and the book methods and results are used for tax purposes. S adjusts the amount of intercompany

inventory items not taken into account as required by section 263A.

(b) *Reasonable method.* The method used by S is a reasonable method under paragraph (e)(1)(iv) of this section if the cumulative amount of intercompany inventory items not taken into account by S is not significantly greater than the cumulative amount that would not be taken into account under the methods specifically described in paragraph (e)(1) of this section. If, for any year, the method results in a cumulative amount of intercompany inventory items not taken into account by S that significantly exceeds the cumulative amount that would not be taken into account under the methods specifically provided, S must take into account for that year the amount necessary to eliminate the excess. The method is thereafter applied with appropriate adjustments to reflect the amount taken into account (e.g., to prevent the amount from being taken into account more than once).

(2) *Reserve accounting*—(i) *Banks and thrifts.* Except as provided in paragraph (g)(3)(iv) of this section (deferral of items from an intercompany obligation), a member's addition to, or reduction of, a reserve for bad debts that is maintained under section 585 or 593 is taken into account on a separate entity basis. For example, if S makes a loan to a nonmember and subsequently sells the loan to B, any deduction for an addition to a bad debt reserve under section 585 and any recapture income (or reduced bad debt deductions) are taken into account on a separate entity basis rather than as intercompany items or corresponding items taken into account under this section. Any gain or loss of S from its sale of the loan to B is taken into account under this section, however, to the extent it is not attributable to recapture of the reserve.

(ii) *Insurance companies*—(A) *Direct insurance.* If a member provides insurance to another member in an intercompany transaction, the transaction is taken into account by both members on a separate entity basis. For example, if one member provides life insurance coverage for another member with respect to its employees, the premiums, reserve increases and decreases, and death benefit payments are determined and taken into account by both members on a separate entity basis rather than taken into account under this section as intercompany items and corresponding items.

(B) *Reinsurance*—(*1*) *In general.* Paragraph (e)(2)(ii)(A) of this section does not apply to a reinsurance transaction that is an intercompany transaction. For example, if a member assumes all or a portion of the risk on an insurance contract written by another member, the amounts transferred as reinsurance premiums, expense allowances, benefit reimbursements, reimbursed policyholder dividends, experience rating adjustments, and other similar items are taken into account under the matching rule and the acceleration rule. For purposes of this section, the assuming company is treated as B and the ceding company is treated as S.

(*2*) *Reserves determined on a separate entity basis.* For purposes of determining the amount of a member's increase or decrease in reserves, the amount of any reserve item listed in section 807(c) or 832(b)(5) resulting from a reinsurance transaction that is an intercompany transaction is determined on a separate entity basis. But see section 845, under which the Commissioner may allocate between or among the members any items, recharacterize any such items, or make any other adjustments necessary to reflect the proper source and character of the separate taxable income of a member.

(3) *Consent to treat intercompany transactions on a separate entity basis*—(i) *General rule.* The common parent may request consent to take into account on a separate entity basis items from intercompany transactions other than intercompany transactions with respect to stock or obligations of members. Consent may be granted for all items, or for items from a class or classes of transactions. The consent is effective only if granted in writing by the Internal Revenue Service. Unless revoked with the written consent of the Internal Revenue Service, the separate entity treatment applies to all affected intercompany transactions in the consolidated return year for which consent is granted and in all subsequent consolidated return years. Consent under this paragraph (e)(3) does not apply for purposes of taking into

account losses and deductions deferred under section 267(f).

(ii) *Time and manner for requesting consent.* The request for consent described in paragraph (e)(3)(i) of this section must be made in the form of a ruling request. The request must be signed by the common parent, include any information required by the Internal Revenue Service, and be filed on or before the due date of the consolidated return (not including extensions of time) for the first consolidated return year to which the consent is to apply. The Internal Revenue Service may impose terms and conditions for granting consent. A copy of the consent must be attached to the group's consolidated returns (or amended returns) as required by the terms of the consent.

(iii) *Effect of consent on methods of accounting.* A consent for separate entity accounting under this paragraph (e)(3), and a revocation of that consent, may require changes in members' methods of accounting for intercompany transactions. Because the consent, or a revocation of the consent, is effective for all intercompany transactions occurring in the consolidated return year for which the consent or revocation is first effective, any change in method is effected on a cut-off basis. Section 446(e) consent is granted for any changes in methods of accounting for intercompany transactions that are necessary solely to conform a member's methods to a binding consent with respect to the group under this paragraph (e)(3) or the revocation of that consent, provided the changes are made in the first consolidated return year for which the consent or revocation under this paragraph (e)(3) is effective. Therefore, section 446(e) consent must be separately requested under applicable administrative procedures if a member has failed to conform its practices to the separate entity accounting provided under this paragraph (e)(3) or the revocation of that treatment in the first consolidated return year for which the consent to use separate entity accounting or revocation of that consent is effective.

(iv) *Consent to treat intercompany transactions on a separate entity basis under prior law.* A group that has received consent that is in effect as of the first day of the first consolidated return year beginning on or after July 12, 1995 to treat certain intercompany transactions as provided in §1.1502–13(c)(3) of the regulations (as contained in the 26 CFR part 1 edition revised as of April 1, 1995) will be considered to have obtained the consent of the Commissioner to take items from intercompany transactions into account on a separate entity basis as provided in paragraph (e)(3)(i) of this section. This treatment is applicable only to the items, class or classes of transactions for which consent was granted under prior law.

(f) *Stock of members*—(1) *In general.* In addition to the general rules of this section, the rules of this paragraph (f) apply to stock of members.

(2) *Intercompany distributions to which section 301 applies*—(i) *In general.* This paragraph (f)(2) provides rules for intercompany transactions to which section 301 applies (intercompany distributions). For purposes of determining whether a distribution is an intercompany distribution, it is treated as occurring under the principles of the entitlement rule of paragraph (f)(2)(iv) of this section. A distribution is not an intercompany distribution to the extent it is deducted by the distributing member. See, for example, section 1382(c)(1).

(ii) *Distributee member.* An intercompany distribution is not included in the gross income of the distributee member (B). However, this exclusion applies to a distribution only to the extent there is a corresponding negative adjustment reflected under §1.1502–32 in B's basis in the stock of the distributing member (S). For example, no amount is included in B's gross income under section 301(c)(3) from a distribution in excess of the basis of the stock of a subsidiary that results in an excess loss account under §1.1502–32(a) which is treated as negative basis under §1.1502–19. B's dividend received deduction under section 243(a)(3) is determined without regard to any intercompany distributions under this paragraph (f)(2) to the extent they are not included in gross income. See §1.1502–26(b) (applicability of the dividends received deduction to distributions not excluded from gross income, such as a

distribution from the common parent to a subsidiary owning stock of the common parent).

(iii) *Distributing member*. The principles of section 311(b) apply to S's loss, as well as gain, from an intercompany distribution of property. Thus, S's loss is taken into account under the matching rule if the property is subsequently sold to a nonmember. However, section 311(a) continues to apply to distributions to nonmembers (for example, loss is not recognized).

(iv) *Entitlement rule*—(A) *In general*. For all Federal income tax purposes, an intercompany distribution is treated as taken into account when the shareholding member becomes entitled to it (generally on the record date). For example, if B becomes entitled to a cash distribution before it is made, the distribution is treated as made when B becomes entitled to it. For this purpose, B is treated as entitled to a distribution no later than the time the distribution is taken into account under the Internal Revenue Code (e.g., under section 305(c)). To the extent a distribution is not made, appropriate adjustments must be made as of the date it was taken into account.

(B) *Nonmember shareholders*. If nonmembers own stock of the distributing corporation at the time the distribution is treated as occurring under this paragraph (f)(2)(iv), appropriate adjustments must be made to prevent the acceleration of the distribution to members from affecting distributions to nonmembers.

(3) *Boot in an intercompany reorganization*—(i) *Scope*. This paragraph (f)(3) provides additional rules for an intercompany transaction in which the receipt of money or other property (nonqualifying property) results in the application of section 356. For example, the distribution of stock of a lower-tier member to a higher-tier member in an intercompany transaction to which section 355 would apply but for the receipt of nonqualifying property is a transaction to which this paragraph (f)(3) applies. This paragraph (f)(3) does not apply if a party to the transaction becomes a member or nonmember as part of the same plan or arrangement. For example, if S merges into a nonmember in a transaction described in section 368(a)(1)(A), this paragraph (f)(3) does not apply.

(ii) *Treatment*. Nonqualifying property received as part of a transaction described in this paragraph (f)(3) is treated as received by the member shareholder in a separate transaction. See, for example, sections 302 and 311 (rather than sections 356 and 361). The nonqualifying property is treated as taken into account immediately after the transaction if section 354 would apply but for the fact that nonqualifying property is received. It is treated as taken into account immediately before the transaction if section 355 would apply but for the fact that nonqualifying property is received. The treatment under this paragraph (f)(3)(ii) applies for all Federal income tax purposes.

(4) *Acquisition by issuer of its own stock*. If a member acquires its own stock, or an option to buy or sell its own stock, in an intercompany transaction, the member's basis in that stock or option is treated as eliminated for all purposes. Accordingly, S's intercompany items from the stock or options of B are taken into account under this section if B acquires the stock or options in an intercompany transaction (unless, for example, B acquires the stock in exchange for successor property within the meaning of paragraph (j)(1) of this section in a nonrecognition transaction). For example, if B redeems its stock from S in a transaction to which section 302(a) applies, S's gain from the transaction is taken into account immediately under the acceleration rule.

(5) *Certain liquidations and distributions*—(i) *Netting allowed*. S's intercompany item from a transfer to B of the stock of another corporation (T) is taken into account under this section in certain circumstances even though the T stock is never held by a nonmember after the intercompany transaction. For example, if S sells all of T's stock to B at a gain, and T subsequently liquidates into B in a separate transaction to which section 332 applies, S's gain is taken into account under the matching rule. Under paragraph (c)(6)(ii) of this section, S's intercompany gain taken into account

as a result of a liquidation under section 332 or a comparable nonrecognition transaction is not redetermined to be excluded from gross income. Under this paragraph (f)(5)(i), if S has both intercompany income or gain and intercompany deduction or loss attributable to stock of the same corporation having the same material terms, only the income or gain in excess of the deduction or loss is subject to paragraph (c)(6)(ii) of this section. This paragraph (f)(5)(i) applies only to a transaction in which B's basis in its T stock is permanently eliminated in a liquidation under section 332 or any comparable nonrecognition transaction, including—

(A) A merger of B into T under section 368(a);

(B) A distribution by B of its T stock in a transaction described in section 355; or

(C) A deemed liquidation of T resulting from an election under section 338(h)(10).

(ii) *Elective relief*—(A) *In general*. If an election is made pursuant to this paragraph (f)(5)(ii), certain transactions are recharacterized to prevent S's items from being taken into account or to provide offsets to those items. This paragraph (f)(5)(ii) applies only if T is a member throughout the period beginning with S's transfer and ending with the completion of the nonrecognition transaction.

(B) *Section 332*—(*1*) *In general*. If section 332 applies to T's liquidation into B, and B transfers T's assets to a new member (new T) in a transaction not otherwise pursuant to the same plan or arrangement as the liquidation, the transfer is nevertheless treated for all Federal income tax purposes as pursuant to the same plan or arrangement as the liquidation. For example, if T liquidates into B, but B forms new T by transferring substantially all of T's former assets to new T, S's intercompany gain or loss generally is not taken into account solely as a result of the liquidation if the liquidation and transfer would qualify as a reorganization described in section 368(a). (Under paragraph (j)(1) of this section, B's stock in new T would be a successor asset to B's stock in T, and S's gain would be taken into account based on the new T stock.)

(*2*) *Time limitation and adjustments*. The transfer of an asset to new T not otherwise pursuant to the same plan or arrangement as the liquidation is treated under this paragraph (f)(5)(ii)(B) as pursuant to the same plan or arrangement only if B transfers it to new T pursuant to a written plan, a copy of which is attached to a timely filed original return (including extensions) for the year of T's liquidation, and the transfer is completed within 12 months of the filing of that return. Appropriate adjustments are made to reflect any events occurring before the formation of new T and to reflect any assets not transferred to new T as part of the same plan or arrangement. For example, if B retains an asset in the reorganization, the asset is treated under paragraph (f)(3) of this section as acquired by new T but distributed to B immediately after the reorganization.

(*3*) *Downstream merger, etc*. The principles of this paragraph (f)(5)(ii)(B) apply, with appropriate adjustments, if B's basis in the T stock is eliminated in a transaction similar to a section 332 liquidation, such as a transaction described in section 368 in which B merges into T. For example, if S and B are subsidiaries, and S sells all of T's stock to B at a gain followed by B's merger into T in a separate transaction described in section 368(a), S's gain is not taken into account solely as a result of the merger if T (as successor to B) forms new T with substantially all of T's former assets.

(C) *Section 338(h)(10)*—(*1*) *In general*. This paragraph (f)(5)(ii)(C) applies to a deemed liquidation of T under section 332 as the result of an election under section 338(h)(10). This paragraph (f)(5)(ii)(C) does not apply if paragraph (f)(5)(ii)(B) of this section is applied to the deemed liquidation. Under this paragraph, B is treated with respect to each share of its T stock as recognizing as a corresponding item any loss or deduction it would recognize (determined after adjusting stock basis under § 1.1502–32) if section 331 applied to the deemed liquidation. For all other Federal income tax purposes, the deemed liquidation remains subject to section 332.

(*2*) *Limitation on amount of loss*. The amount of B's loss or deduction under this paragraph (f)(5)(ii)(C) is limited as follows—

(*i*) The aggregate amount of loss recognized with respect to T stock cannot exceed the amount of S's intercompany income or gain that is in excess of S's intercompany deduction or loss with respect to shares of T stock having the same material terms as the shares giving rise to S's intercompany income or gain; and

(*ii*) The aggregate amount of loss recognized under this paragraph (f)(5)(ii)(C) from T's deemed liquidation cannot exceed the net amount of deduction or loss (if any) that would be taken into account from the deemed liquidation if section 331 applied with respect to all T shares.

(*3*) *Asset sale, etc*. The principles of this paragraph (f)(5)(ii)(C) apply, with appropriate adjustments, if T transfers all of its assets to a nonmember and completely liquidates in a transaction comparable to the section 338(h)(10) transaction described in paragraph (f)(5)(ii)(C)(*1*) of this section. For example, if S sells all of T's stock to B at a gain followed by T's merger into a nonmember in exchange for a cash payment to B in a transaction treated for Federal income tax purposes as T's sale of its assets to the nonmember and complete liquidation, the merger is ordinarily treated as a comparable transaction.

(D) *Section 355*. If B distributes the T stock in an intercompany transaction to which section 355 applies (including an intercompany transaction to which 355 applies because of the application of paragraph (f)(3) of this section), the redetermination of the basis of the T stock under section 358 could cause S's gain or loss to be taken into account under this section. This paragraph (f)(5)(ii)(D) applies to treat B's distribution as subject to sections 301 and 311 (as modified by this paragraph (f)), rather than section 355. The election will prevent S's gain or loss from being taken into account immediately to the extent matching remains possible, but B's gain or loss from the distribution will also be taken into account under this section.

(E) *Election*. An election to apply this paragraph (f)(5)(ii) is made in a separate statement entitled ''[Insert Name and Employer Identification Number of Common Parent] HEREBY ELECTS THE APPLICATION OF §1.1502–13(f)(5)(ii).'' The election must include a description of S's intercompany transaction and T's liquidation (or other transaction). It must specify which provision of §1.1502–13(f)(5)(ii) applies and how it alters the otherwise applicable results under this section (including, for example, the amount of S's intercompany items and the amount deferred or offset as a result of this §1.1502–13(f)(5)(ii)). A separate election must be made for each application of this paragraph (f)(5)(ii). The election must be signed by the common parent and filed with the group's income tax return for the year of T's liquidation (or other transaction). The Commissioner may impose reasonable terms and conditions to the application of this paragraph (f)(5)(ii) that are consistent with the purposes of this section.

(6) *Stock of common parent*. In addition to the general rules of this section, this paragraph (f)(6) applies to parent stock (P stock) and positions in P stock held or entered into by another member. For this purpose, P stock is any stock of the common parent held (directly or indirectly) by another member or any stock of a member (the issuer) that was the common parent if the stock was held (directly or indirectly) by another member while the issuer was the common parent.

(i) *Loss stock*—(A) *Recognized loss*. Any loss recognized, directly or indirectly, by a member with respect to P stock is permanently disallowed and does not reduce earnings and profits. See §1.1502–32(b)(3)(iii)(A) for a corresponding reduction in the basis of the member's stock.

(B) *Other cases*. If a member, M, owns P stock, the stock is subsequently owned by a nonmember, and, immediately before the stock is owned by the nonmember, M's basis in the share exceeds its fair market value, then, to the extent paragraph (f)(6)(i)(A) of this section does not apply, M's basis in the share is reduced to the share's fair market value immediately before the

share is held by the nonmember. For example, if M owns shares of P stock with a $100x basis and M becomes a nonmember at a time when the P shares have a value of $60x, M's basis in the P shares is reduced to $60x immediately before M becomes a nonmember. Similarly, if M contributes the P stock to a nonmember in a transaction subject to section 351, M's basis in the shares is reduced to $60x immediately before the contribution. See § 1.1502–32(b)(3)(iii)(B) for a corresponding reduction in the basis of M's stock.

(C) *Waiver of built-in loss on P stock*—*(1) In general.* If a nonmember that owns P stock with a basis in excess of its fair market value becomes a member of the P consolidated group in a qualifying cost basis transaction, the group may make an irrevocable election to reduce the basis of the P stock to its fair market value immediately before the nonmember becomes a member of the P group. If the nonmember was a member of another consolidated group immediately before becoming a member of the P group, the reduction in basis is treated as occurring immediately after it ceases to be a member of the prior group. A qualifying cost basis transaction is the purchase (i.e., a transaction in which basis is determined under section 1012) by members of the P consolidated group (while they are members) in a 12-month period of an amount of the nonmember's stock satisfying the requirements of section 1504(a)(2).

(*2*) *Election.* The election described in this paragraph (6)(i)(C) must be made in a separate statement entitled ''ELECTION TO REDUCE BASIS OF P STOCK UNDER § 1.1502–13(f)(6).'' The statement must be filed with the P consolidated group's return for the year in which the nonmember becomes a member, and it must be signed by both P and the nonmember. The statement must identify the fair market value of, and the amount of the basis reduction in, the P stock.

(ii) *Gain stock.* If a member, M, would otherwise recognize gain on a qualified disposition of P stock, then immediately before the qualified disposition, M is treated as purchasing the P stock from P for fair market value with cash contributed to M by P (or, if necessary, through any intermediate members). A disposition is a qualified disposition only if—

(A) The member acquires the P stock directly from the common parent (P) through a contribution to capital or a transaction qualifying under section 351(a) (or, if necessary, through a series of such transactions involving only members);

(B) Pursuant to a plan, the member transfers the stock immediately to a nonmember that is not related, within the meaning of section 267(b) or 707(b), to any member of the group;

(C) No nonmember receives a substituted basis in the stock within the meaning of section 7701(a)(42);

(D) The P stock is not exchanged for P stock;

(E) P neither becomes nor ceases to be the common parent as part of, or in contemplation of, the disposition or plan; and

(F) M is neither a nonmember that becomes a member nor a member that becomes a nonmember as part of, or in contemplation of, the disposition or plan.

(iii) *Mark-to-market of P stock.* Paragraphs (f)(6)(i) and (ii) of this section shall not apply to any gain or loss from a share of P stock held by a member, M, if—

(A) M regularly trades in P stock (of the same class) with customers in the ordinary course of its business as a dealer;

(B) The gain or loss on the share is taken into account by M pursuant to section 475(a);

(C) M's basis in the share is not adjusted by reference to the basis of any other property or by reference to income, gain, deduction, or loss from other property; and

(D) Neither M nor any other member of the group has structured or engaged in any transaction while a member (or in anticipation of becoming a member), during the taxable year or in any year within the preceding five taxable years that is open for assessment under section 6501, with a principal purpose of avoiding gain or creating loss on P stock subject to section 475(a).

(iv) *Options, warrants, and other positions*—(A) *In general.* This paragraph

(f)(6) applies with appropriate adjustments to positions in P stock to the extent that P's gain or loss from an equivalent position would not be recognized under section 1032. Thus, if M purchases an option to buy or sell P stock and sells the option at a loss, the loss is permanently disallowed under paragraph (f)(6)(i)(A) of this section. Similarly, if M is the grantor of such an option and becomes a nonmember, then the principles of paragraph (f)(6)(i)(B) of this section apply to the extent that M would recognize loss from cash settlement of the option at its fair market value immediately before M becomes a nonmember, and proper adjustments must be made in the amount of any gain or loss subsequently realized from the position by M. If P grants M an option to acquire P stock in a transaction meeting the requirements of paragraph (f)(6)(ii) of this section, M is treated as having purchased the option from P for fair market value with cash contributed to M by P.

(B) *Mark-to-market of positions in P stock*. For purposes of paragraph (f)(6)(iii) of this section, gain or loss with respect to a position taken into account under section 1256(a) is treated as taken into account under section 475(a) to the extent that the gain or loss would be taken into account under the principles of section 475.

(v) *Effective date*. This paragraph (f)(6) applies to gain or loss taken into account on or after July 12, 1995, and to transactions occurring on or after July 12, 1995. However, paragraph (f)(6)(ii) of this section and the last sentence of paragraph (f)(6)(iv)(A) of this section do not apply to dispositions of P stock or options occurring on or after May 16, 2000. For example, if S sells P stock to B at a loss prior to July 12, 1995, and B sells the P stock to a nonmember after July 12, 1995, S's loss is disallowed because it is taken into account after July 12, 1995. If a taxpayer takes a gain or loss into account or engages in a transaction on or after July 12, 1995, during a tax year ending prior to December 31, 1995, the taxpayer may treat the gain or loss or the transaction under the rules published in 1995–32 I.R.B. 47, instead of under the rules of this paragraph (f)(6).

(7) *Examples*. The application of this section to intercompany transactions with respect to stock of members is illustrated by the following examples.

Example 1. Dividend exclusion and property distribution. (a) *Facts*. S owns land with a $70 basis and $100 value. On January 1 of Year 1, P's basis in S's stock is $100. During Year 1, S declares and makes a dividend distribution of the land to P. Under section 311(b), S has a $30 gain. Under section 301(d), P's basis in the land is $100. On July 1 of Year 3, P sells the land to X for $110.

(b) *Dividend elimination and stock basis adjustments*. Under paragraph (b)(1) of this section, S's distribution to P is an intercompany distribution. Under paragraph (f)(2)(ii) of this section, P's $100 of dividend income is not included in gross income. Under § 1.1502–32, P's basis in S's stock is reduced from $100 to $0 in Year 1.

(c) *Matching rule and stock basis adjustments*. Under the matching rule (treating P as the buying member and S as the selling member), S takes its $30 gain into account in Year 3 to reflect the $30 difference between P's $10 gain taken into account and the $40 recomputed gain. Under § 1.1502–32, P's basis in S's stock is increased from $0 to $30 in Year 3.

(d) *Loss property*. The facts are the same as in paragraph (a) of this *Example 1*, except that S has a $130 (rather than $70) basis in the land. Under paragraph (f)(2)(iii) of this section, the principles of section 311(b) apply to S's loss from the intercompany distribution. Thus, S has a $30 loss that is taken into account under the matching rule in Year 3 to reflect the $30 difference between P's $10 gain taken into account and the $20 recomputed loss. (The results are the same under section 267(f).) Under § 1.1502–32, P's basis in S's stock is reduced from $100 to $0 in Year 1, and from $0 to a $30 excess loss account in Year 3. (If P had distributed the land to its shareholders, rather than selling the land to X, P would take its $10 gain under section 311(b) into account, and S would take its $30 loss into account under the matching rule with $10 offset by P's gain and $20 recharacterized as a noncapital, nondeductible amount.)

(e) *Entitlement rule*. The facts are the same as in paragraph (a) of this *Example 1*, except that, after P becomes entitled to the distribution but before the distribution is made, S issues additional stock to the public and becomes a nonmember. Under paragraph (f)(2)(i) of this section, the determination of whether a distribution is an intercompany distribution is made under the entitlement rule of paragraph (f)(2)(iv) of this section. Treating S's distribution as made when P becomes entitled to it results in the distribution being an intercompany distribution. Under paragraph (f)(2)(ii) of this section, the

distribution is not included in P's gross income. S's $30 gain from the distribution is intercompany gain that is taken into account under the acceleration rule immediately before S becomes a nonmember. Thus, there is a net $70 decrease in P's basis in its S stock under § 1.1502–32 ($100 decrease for the distribution and a $30 increase for S's $30 gain). See also § 1.1502–20(b) (additional stock basis reductions applicable to certain deconsolidations). Under paragraph (f)(2)(iv) of this section, P does not take the distribution into account again under separate return rules when received, and P is not entitled to a dividends received deduction.

Example 2. Excess loss accounts. (a) *Facts.* S owns all of T's only class of stock with a $10 basis and $100 value. S has substantial earnings and profits, and T has $10 of earnings and profits. On January 1 of Year 1, S declares and distributes a dividend of all of the T stock to P. Under section 311(b), S has a $90 gain. Under section 301(d), P's basis in the T stock is $100. During Year 3, T borrows $90 and declares and makes a $90 distribution to P to which section 301 applies, and P's basis in the T stock is reduced under § 1.1502–32 from $100 to $10. During Year 6, T has $5 of earnings that increase P's basis in the T stock under § 1.1502–32 from $10 to $15. On December 1 of Year 9, T issues additional stock to X and, as a result, T becomes a nonmember.

(b) *Dividend exclusion.* Under paragraph (f)(2)(ii) of this section, P's $100 of dividend income from S's distribution of the T stock, and its $10 of dividend income from T's $90 distribution, are not included in gross income.

(c) *Matching and acceleration rules.* Under § 1.1502–19(b)(1), when T becomes a nonmember P must include in income the amount of its excess loss account (if any) in T stock. P has no excess loss account in the T stock. Therefore P's corresponding item from the deconsolidation of T is $0. Treating S and P as divisions of a single corporation, the T stock would continue to have a $10 basis after the distribution, and the adjustments under § 1.1502–32 for T's $90 distribution and $5 of earnings would result in a $75 excess loss account. Thus, the recomputed corresponding item from the deconsolidation is $75. Under the matching rule, S takes $75 of its $90 gain into account in Year 9 as a result of T becoming a nonmember, to reflect the difference between P's $0 gain taken into account and the $75 recomputed gain. S's remaining $15 of gain is taken into account under the matching and acceleration rules based on subsequent events (for example, under the matching rule if P subsequently sells its T stock, or under the acceleration rule if S becomes a nonmember).

(d) *Reverse sequence.* The facts are the same as in paragraph (a) of this *Example 2*, except that T borrows $90 and makes its $90 distribution to S before S distributes T's stock to P. Under paragraph (f)(2)(ii) of this section, T's $90 distribution to S ($10 of which is a dividend) is not included in S's gross income. The corresponding negative adjustment under § 1.1502–32 reduces S's basis in the T stock from $10 to an $80 excess loss account. Under section 311(b), S has a $90 gain from the distribution of T stock to P. Under section 301(d) P's initial basis in the T stock is $10 (the stock's fair market value), and the basis increases to $15 under § 1.1502–32 as a result of T's earnings in Year 6. The timing and attributes of S's gain are determined in the manner provided in paragraph (c) of this *Example 2*. Thus, $75 of S's gain is taken into account under the matching rule in Year 9 as a result of T becoming a nonmember, and the remaining $15 is taken into account under the matching and acceleration rules based on subsequent events.

(e) *Partial stock sale.* The facts are the same as in paragraph (a) of this *Example 2*, except that P sells 10% of T's stock to X on December 1 of Year 9 for $1.50 (rather than T's issuing additional stock and becoming a nonmember). Under the matching rule, S takes $9 of its gain into account to reflect the difference between P's $0 gain taken into account ($1.50 sale proceeds minus $1.50 basis) and the $9 recomputed gain ($1.50 sale proceeds plus $7.50 excess loss account).

(f) *Loss, rather than cash distribution.* The facts are the same as in paragraph (a) of this *Example 2*, except that T retains the loan proceeds and incurs a $90 loss in Year 3 that is absorbed by the group. The timing and attributes of S's gain are determined in the same manner provided in paragraph (c) of this *Example 2*. Under § 1.1502–32, the loss in Year 3 reduces P's basis in the T stock from $100 to $10, and T's $5 of earnings in Year 6 increase the basis to $15. Thus, $75 of S's gain is taken into account under the matching rule in Year 9 as a result of T becoming a nonmember, and the remaining $15 is taken into account under the matching and acceleration rules based on subsequent events. (The timing and attributes of S's gain would be determined in the same manner provided in paragraph (d) of this *Example 2* if T incurred the $90 loss before S's distribution of the T stock to P.)

(g) *Stock sale, rather than stock distribution.* The facts are the same as in paragraph (a) of this *Example 2*, except that S sells the T stock to P for $100 (rather than distributing the stock). The timing and attributes of S's gain are determined in the same manner provided in paragraph (c) of this *Example 2*. Thus, $75 of S's gain is taken into account under the matching rule in Year 9 as a result of T becoming a nonmember, and the remaining $15 is taken into account under the matching and acceleration rules based on subsequent events.

Example 3. Intercompany reorganization. (a) *Facts.* P forms S and B by contributing $200 to the capital of each. During Years 1 through 4, S and B each earn $50, and under § 1.1502–32 P adjusts its basis in the stock of each to $250. (See § 1.1502–33 for adjustments to earnings and profits.) On January 1 of Year 5, the fair market value of S's assets and its stock is $500, and S merges into B in a tax-free reorganization. Pursuant to the plan of reorganization, P receives B stock with a fair market value of $350 and $150 of cash.

(b) *Treatment as a section 301 distribution.* The merger of S into B is a transaction to which paragraph (f)(3) of this section applies. P is treated as receiving additional B stock with a fair market value of $500 and, under section 358, a basis of $250. Immediately after the merger, $150 of the stock received is treated as redeemed, and the redemption is treated under section 302(d) as a distribution to which section 301 applies. Because the $150 distribution is treated as not received as part of the merger, section 356 does not apply and no basis adjustments are required under section 358(a)(1)(A) and (B). Because B is treated under section 381(c)(2) as receiving S's earnings and profits and the redemption is treated as occurring after the merger, $100 of the distribution is treated as a dividend under section 301 and P's basis in the B stock is reduced correspondingly under § 1.1502–32. The remaining $50 of the distribution reduces P's basis in the B stock. Section 301(c)(2) and § 1.1502–32. Under paragraph (f)(2)(ii) of this section, P's $100 of dividend income is not included in gross income. Under § 1.302–2(c), proper adjustments are made to P's basis in its B stock to reflect its basis in the B stock redeemed, with the result that P's basis in the B stock is reduced by the entire $150 distribution.

(c) *Depreciated property.* The facts are the same as in paragraph (a) of this *Example 3*, except that property of S with a $200 basis and $150 fair market value is distributed to P (rather than cash of B). As in paragraph (b) of this *Example 3*, P is treated as receiving additional B stock in the merger and a $150 distribution to which section 301 applies immediately after the merger. Under paragraph (f)(2)(iii) of this section, the principles of section 311(b) apply to B's $50 loss and the loss is taken into account under the matching and acceleration rules based on subsequent events (e.g., under the matching rule if P subsequently sells the property, or under the acceleration rule if B becomes a nonmember). The results are the same under section 267(f).

(d) *Divisive transaction.* Assume instead that, pursuant to a plan, S distributes the stock of a lower-tier subsidiary in a spin-off transaction to which section 355 applies together with $150 of cash. The distribution of stock is a transaction to which paragraph (f)(3) of this section applies. P is treated as receiving the $150 of cash immediately before the section 355 distribution, as a distribution to which section 301 applies. Section 356(b) does not apply and no basis adjustments are required under section 358(a)(1) (A) and (B). Because the $150 distribution is treated as made before the section 355 distribution, the distribution reduces P's basis in the S stock under § 1.1502–32, and the basis allocated under section 358(c) between the S stock and the lower-tier subsidiary stock received reflects this basis reduction.

Example 4. Stock redemptions and distributions. (a) *Facts.* Before becoming a member of the P group, S owns P stock with a $30 basis. On January 1 of Year 1, P buys all of S's stock. On July 1 of Year 3, P redeems the P stock held by S for $100 in a transaction to which section 302(a) applies.

(b) *Gain under section 302.* Under paragraph (f)(4) of this section, P's basis in the P stock acquired from S is treated as eliminated. As a result of this elimination, S's intercompany item will never be taken into account under the matching rule because P's basis in the stock does not reflect S's intercompany item. Therefore, S's $70 gain is taken into account under the acceleration rule in Year 3. The attributes of S's item are determined under paragraph (d)(1)(ii) of this section by applying the matching rule as if P had sold the stock to an affiliated corporation that is not a member of the group at no gain or loss. Although P's corresponding item from a sale of its stock would have been excluded from gross income under section 1032, paragraph (c)(6)(ii) of this section prevents S's gain from being treated as excluded from gross income; instead S's gain is capital gain.

(c) *Gain under section 311.* The facts are the same as in paragraph (a) of this *Example 4*, except that S distributes the P stock to P in a transaction to which section 301 applies (rather than the stock being redeemed), and S has a $70 gain under section 311(b). The timing and attributes of S's gain are determined in the manner provided in paragraph (b) of this *Example 4*.

(d) *Loss stock.* The facts are the same as in paragraph (a) of this *Example 4*, except that S has a $130 (rather than $30) basis in the P stock and has a $30 loss under section 302(a). The limitation under paragraph (c)(6)(ii) of this section does not apply to intercompany losses. Thus, S's loss is taken into account in Year 3 as a noncapital, nondeductible amount.

Example 5. Intercompany stock sale followed by section 332 liquidation. (a) *Facts.* S owns all of the stock of T, with a $70 basis and $100 value, and T's assets have a $10 basis and $100 value. On January 1 of Year 1, S sells all of T's stock to B for $100. On July 1 of Year 3, when T's assets are still worth $100, T distributes all of its assets to B in an unrelated

complete liquidation to which section 332 applies.

(b) *Timing and attributes.* Under paragraph (b)(3)(ii) of this section, B's unrecognized gain or loss under section 332 is a corresponding item for purposes of applying the matching rule. In Year 3 when T liquidates, B has $0 of unrecognized gain or loss under section 332 because B has a $100 basis in the T stock and receives a $100 distribution with respect to its T stock. Treating S and B as divisions of a single corporation, the recomputed corresponding item would have been $30 of unrecognized gain under section 332 because B would have succeeded to S's $70 basis in the T stock. Thus, under the matching rule, S's $30 intercompany gain is taken into account in Year 3 as a result of T's liquidation. Under paragraph (c)(1)(i) of this section, the attributes of S's gain and B's corresponding item are redetermined as if S and B were divisions of a single corporation. Although S's gain ordinarily would be redetermined to be treated as excluded from gross income to reflect the nonrecognition of B's gain under section 332, S's gain remains capital gain because B's unrecognized gain under section 332 is not permanently and explicitly disallowed under the Code. See paragraph (c)(6)(ii) of this section. However, relief may be elected under paragraph (f)(5)(ii) of this section.

(c) *Intercompany sale at a loss.* The facts are the same as in paragraph (a) of this *Example 5*, except that S has a $130 (rather than $70) basis in the T stock. The limitation under paragraph (c)(6)(ii) of this section does not apply to intercompany losses. Thus, S's intercompany loss is taken into account in Year 3 as a noncapital, nondeductible amount. However, relief may be elected under paragraph (f)(5)(ii) of this section.

Example 6. Intercompany stock sale followed by section 355 distribution. (a) *Facts.* S owns all of the stock of T with a $70 basis and a $100 value. On January 1 of Year 1, S sells all of T's stock to M for $100. On June 1 of Year 6, M distributes all of its T stock to its nonmember shareholders in a transaction to which section 355 applies. At the time of the distribution, M has a basis in T stock of $100 and T has a value of $150.

(b) *Timing and attributes.* Under paragraph (b)(3)(ii) of this section, M's $50 gain not recognized on the distribution under section 355 is a corresponding item. Treating S and M as divisions of a single corporation, the recomputed corresponding item would be $80 of unrecognized gain under section 355 because M would have succeeded to S's $70 basis in the T stock. Thus, under the matching rule, S's $30 intercompany gain is taken into account in Year 6 as a result of the distribution. Under paragraph (c)(1)(i) of this section, the attributes of S's intercompany item and M's corresponding item are redetermined to produce the same effect on consolidated taxable income as if S and M were divisions of a single corporation. Although S's gain ordinarily would be redetermined to be treated as excluded from gross income to reflect the nonrecognition of M's gain under section 355(c), S's gain remains capital gain because M's unrecognized gain under section 355(c) is not permanently and explicitly disallowed under the Code. See paragraph (c)(6)(ii) of this section. Because M's distribution of the T stock is not an intercompany transaction, relief is not available under paragraph (f)(5)(ii) of this section.

(c) *Section 355 distribution within the group.* The facts are the same as under paragraph (a) of this *Example 6*, except that M distributes the T stock to B (another member of the group), and B takes a $75 basis in the T stock under section 358. Under paragraph (j)(2) of this section, B is a successor to M for purposes of taking S's intercompany gain into account, and therefore both M and B might have corresponding items with respect to S's intercompany gain. To the extent it is possible, matching with respect to B's corresponding items produces the result most consistent with treating S, M, and B as divisions of a single corporation. See paragraphs (j)(3) and (j)(4) of this section. However, because there is only $5 difference between B's $75 basis in the T stock and the $70 basis the stock would have if S, M, and B were divisions of a single corporation, only $5 can be taken into account under the matching rule with respect to B's corresponding items. (This $5 is taken into account with respect to B's corresponding items based on subsequent events.) The remaining $25 of S's $30 intercompany gain is taken into account in Year 6 under the matching rule with respect to M's corresponding item from its distribution of the T stock. The attributes of S's remaining $25 of gain are determined in the same manner as in paragraph (b) of this *Example 6*.

(d) *Relief elected.* The facts are the same as in paragraph (c) of this *Example 6* except that P elects relief pursuant to paragraph (f)(5)(ii)(D) of this section. As a result of the election, M's distribution of the T stock is treated as subject to sections 301 and 311 instead of section 355. Accordingly, M recognizes $50 of intercompany gain from the distribution, B takes a basis in the stock equal to its fair market value of $150, and S and M take their intercompany gains into account with respect to B's corresponding items based on subsequent events. (None of S's gain is taken into account in Year 6 as a result of M's distribution of the T stock.)

(g) *Obligations of members*—(1) *In general.* In addition to the general rules of this section, the rules of this paragraph (g) apply to intercompany obligations.

(2) *Definitions.* For purposes of this section—

(i) *Obligation of a member.* An obligation of a member is—

(A) Any obligation of the member constituting indebtedness under general principles of Federal income tax law (for example, under nonstatutory authorities, or under section 108, section 163, section 171, or section 1275), but not an executory obligation to purchase or provide goods or services; and

(B) Any security of the member described in section 475(c)(2)(D) or (E), and any comparable security with respect to commodities, but not if the security is a position with respect to the member's stock. See paragraphs (f)(4) and (6) of this section for special rules applicable to positions with respect to a member's stock.

(ii) *Intercompany obligations.* An intercompany obligation is an obligation between members, but only for the period during which both parties are members.

(3) *Deemed satisfaction and reissuance of intercompany obligations*—(i) *Application*—(A) *In general.* If a member realizes an amount (other than zero) of income, gain, deduction, or loss, directly or indirectly, from the assignment or extinguishment of all or part of its remaining rights or obligations under an intercompany obligation, the intercompany obligation is treated for all Federal income tax purposes as satisfied under paragraph (g)(3)(ii) of this section and, if it remains outstanding, reissued under paragraph (g)(3)(iii) of this section. Similar principles apply under this paragraph (g)(3) if a member realizes any such amount, directly or indirectly, from a comparable transaction (for example, a marking-to-market of an obligation or a bad debt deduction), or if an intercompany obligation becomes an obligation that is not an intercompany obligation.

(B) *Exceptions.* This paragraph (g)(3) does not apply to an obligation if any of the following applies:

(*1*) The obligation became an intercompany obligation by reason of an event described in §1.108–2(e) (exceptions to the application of section 108(e)(4)).

(*2*) The amount realized is from reserve accounting under section 585 or section 593 (see paragraph (g)(3)(iv) of this section for special rules).

(*3*) The amount realized is from the conversion of an obligation into stock of the obligor.

(*4*) Treating the obligation as satisfied and reissued will not have a significant effect on any person's Federal income tax liability for any year. For this purpose, obligations issued in connection with the same transaction or related transactions are treated as a single obligation. However, this paragraph (g)(3)(i)(B)(*4*) does not apply to any obligation if the aggregate effect of this treatment for all obligations in a year would be significant.

(ii) *Satisfaction*—(A) *General rule.* If a creditor member sells intercompany debt for cash, the debt is treated as satisfied by the debtor immediately before the sale for the amount of the cash. For other transactions, similar principles apply to treat the intercompany debt as satisfied immediately before the transaction. Thus, if the debt is transferred for property, it is treated as satisfied for an amount consistent with the amount for which the debt is deemed reissued under paragraph (g)(3)(iii) of this section, and the basis of the property is also adjusted to reflect that amount. If this paragraph (g)(3) applies because the debtor or creditor becomes a nonmember, the obligation is treated as satisfied for cash in an amount equal to its fair market value immediately before the debtor or creditor becomes a nonmember. Similar principles apply to intercompany obligations other than debt.

(B) *Timing and attributes.* For purposes of applying the matching rule and the acceleration rule—

(*1*) Paragraph (c)(6)(ii) of this section (limitation on treatment of intercompany income or gain as excluded from gross income) does not apply to prevent any intercompany income or gain from being excluded from gross income; and

(*2*) Any gain or loss from an intercompany obligation is not subject to section 108(a), section 354 or section 1091.

(iii) *Reissuance.* If a creditor member sells intercompany debt for cash, the debt is treated as a new debt (with a

new holding period) issued by the debtor immediately after the sale for the amount of cash. For other transactions, if the intercompany debt remains outstanding, similar principles apply to treat the debt as reissued immediately after the transaction. Thus, if the debt is transferred for property, it is treated as new debt issued for the property. See, for example, section 1273(b)(3) or section 1274. If this paragraph (g)(3) applies because the debtor or creditor becomes a nonmember, the debt is treated as new debt issued for an amount of cash equal to its fair market value immediately after the debtor or creditor becomes a nonmember. Similar principles apply to intercompany obligations other than debt.

(iv) *Bad debt reserve.* A member's deduction under section 585 or section 593 for an addition to its reserve for bad debts with respect to an intercompany obligation is not taken into account, and is not treated as realized under this paragraph (g)(3) until the intercompany obligation becomes an obligation that is not an intercompany obligation, or, if earlier, the redemption or cancellation of the intercompany obligation.

(4) *Deemed satisfaction and reissuance of obligations becoming intercompany obligations*—(i) *Application*—(A) *In general.* This paragraph (g)(4) applies if an obligation that is not an intercompany obligation becomes an intercompany obligation.

(B) *Exceptions.* This paragraph (g)(4) does not apply to an obligation if—

(*1*) The obligation becomes an intercompany obligation by reason of an event described in §1.108–2(e) (exceptions to the application of section 108(e)(4)); or

(*2*) Treating the obligation as satisfied and reissued will not have a significant effect on any person's Federal income tax liability for any year. For this purpose, obligations issued in connection with the same transaction or related transactions are treated as a single obligation. However, this paragraph (g)(4)(i)(B)(*2*) does not apply to any obligation if the aggregate effect of this treatment for all obligations in a year would be significant.

(ii) *Intercompany debt.* If this paragraph (g)(4) applies to an intercompany debt—

(A) Section 108(e)(4) does not apply;

(B) The debt is treated for all Federal income tax purposes, immediately after it becomes an intercompany debt, as satisfied and a new debt issued to the holder (with a new holding period) in an amount determined under the principles of §1.108–2(f);

(C) The attributes of all items taken into account from the satisfaction are determined on a separate entity basis, rather than by treating S and B as divisions of a single corporation;

(D) Any intercompany gain or loss taken into account is treated as not subject to section 354 or section 1091; and

(E) Solely for purposes of §1.1502–32(b)(4) and the effect of any election under that provision, any loss taken into account under this paragraph (g)(4) by a corporation that becomes a member as a result of the transaction in which the obligation becomes an intercompany obligation is treated as a loss carryover from a separate return limitation year.

(iii) *Other intercompany obligations.* If this paragraph (g)(4) applies to an intercompany obligation other than debt, the principles of paragraph (g)(4)(ii) of this section apply to treat the intercompany obligation as satisfied and reissued for an amount of cash equal to its fair market value immediately after the obligation becomes an intercompany obligation.

(5) *Examples.* The application of this section to obligations of members is illustrated by the following examples.

Example 1. Interest on intercompany debt. (a) *Facts.* On January 1 of Year 1, B borrows $100 from S in return for B's note providing for $10 of interest annually at the end of each year, and repayment of $100 at the end of Year 5. B fully performs its obligations. Under their separate entity methods of accounting, B accrues a $10 interest deduction annually under section 163, and S accrues $10 of interest income annually under section 61(a)(4).

(b) *Matching rule.* Under paragraph (b)(1) of this section, the accrual of interest on B's note is an intercompany transaction. Under the matching rule, S takes its $10 of income into account in each of Years 1 through 5 to reflect the $10 difference between B's $10 of interest expense taken into account and the

$0 recomputed expense. S's income and B's deduction are ordinary items. (Because S's intercompany item and B's corresponding item would both be ordinary on a separate entity basis, the attributes are not redetermined under paragraph (c)(1)(i) of this section.)

(c) *Original issue discount*. The facts are the same as in paragraph (a) of this *Example 1*, except that B borrows $90 (rather than $100) from S in return for B's note providing for $10 of interest annually and repayment of $100 at the end of Year 5. The principles described in paragraph (b) of this *Example 1* for stated interest also apply to the $10 of original issue discount. Thus, as B takes into account its corresponding expense under section 163(e), S takes into account its intercompany income. S's income and B's deduction are ordinary items.

(d) *Tax-exempt income*. The facts are the same as in paragraph (a) of this *Example 1*, except that B's borrowing from S is allocable under section 265 to B's purchase of state and local bonds to which section 103 applies. The timing of S's income is the same as in paragraph (b) of this *Example 1*. Under paragraph (c)(4)(i) of this section, the attributes of B's corresponding item of disallowed interest expense control the attributes of S's offsetting intercompany interest income. Paragraph (c)(6)(ii) of this section does not prevent the redetermination of S's intercompany item as excluded from gross income, because section 265 permanently and explicitly disallows B's corresponding deduction. Accordingly, S's intercompany income is treated as excluded from gross income.

Example 2. Intercompany debt becomes nonintercompany debt. (a) *Facts*. On January 1 of Year 1, B borrows $100 from S in return for B's note providing for $10 of interest annually at the end of each year, and repayment of $100 at the end of Year 20. As of January 1 of Year 3, B has paid the interest accruing under the note and S sells B's note to X for $70, reflecting a change in the value of the note as a result of increases in prevailing market interest rates. B is never insolvent within the meaning of section 108(d)(3).

(b) *Deemed satisfaction*. Under paragraph (g)(3) of this section, B's note is treated as satisfied for $70 immediately before S's sale to X. As a result of the deemed satisfaction of the obligation for less than its adjusted issue price, B takes into account $30 of discharge of indebtedness income under section 61(a)(12). On a separate entity basis, S's $30 loss would be a capital loss under section 1271(a)(1). Under the matching rule, however, the attributes of S's intercompany item and B's corresponding item must be redetermined to produce the same effect as if the transaction had occurred between divisions of a single corporation. B's corresponding item completely offsets S's intercompany item in amount. Accordingly, under paragraph (c)(4)(i) of this section, the attributes of B's $30 of discharge of indebtedness income control the attributes of S's loss. Thus, S's loss is treated as ordinary loss.

(c) *Deemed reissuance*. Under paragraph (g)(3) of this section, B is also treated as reissuing, directly to X, a new note with a $70 issue price and a $100 stated redemption price at maturity. The new note is not an intercompany obligation, it has a $70 issue price and $100 stated redemption price at maturity, and the $30 of original issue discount will be taken into account by B and X under sections 163(e) and 1272.

(d) *Creditor deconsolidation*. The facts are the same as in paragraph (a) of this *Example 2*, except that P sells S's stock to X (rather than S's selling the note of B). Under paragraph (g)(3) of this section, the note is treated as satisfied by B for its $70 fair market value immediately before S becomes a nonmember, and B is treated as reissuing a new note to S immediately after S becomes a nonmember. The results for S's $30 of loss and B's discharge of indebtedness income are the same as in paragraph (b) of this *Example 2*. The new note is not an intercompany obligation, it has a $70 issue price and $100 stated redemption price at maturity, and the $30 of original issue discount will be taken into account by B and S under sections 163(e) and 1272.

(e) *Debtor deconsolidation*. The facts are the same as in paragraph (a) of this *Example 2*, except that P sells B's stock to X (rather than S's selling the note of B). The results are the same as in paragraph (d) of this *Example 2*.

(f) *Appreciated note*. The facts are the same as in paragraph (a) of this *Example 2*, except that S sells B's note to X for $130 (rather than $70), reflecting a decline in prevailing market interest rates. Under paragraph (g)(3) of this section, B's note is treated as satisfied for $130 immediately before S's sale of the note to X. Under §1.163–7(c), B takes into account $30 of repurchase premium. On a separate entity basis, S's $30 gain would be a capital gain under section 1271(a)(1), and B's $30 premium deduction would be an ordinary deduction. Under the matching rule, however, the attributes of S's intercompany item and B's corresponding item must be redetermined to produce the same effect as if the transaction had occurred between divisions of a single corporation. Under paragraph (c)(4)(i) of this section, the attributes of B's corresponding premium deduction control the attributes of S's intercompany gain. Accordingly, S's gain is treated as ordinary income. B is also treated as reissuing a new note directly to X which is not an intercompany obligation. The new note has a $130 issue price and a $100 stated redemption price at maturity. Under §1.61–12(c), B's $30 premium income under the new note is taken into account over the life of the new note.

Example 3. Loss or bad debt deduction with respect to intercompany debt. (a) *Facts.* On January 1 of Year 1, B borrows $100 from S in return for B's note providing for $10 of interest annually at the end of each year, and repayment of $100 at the end of Year 5. In Year 3, S sells B's note to P for $60. B is never insolvent within the meaning of section 108(d)(3). Assume B's note is not a security within the meaning of section 165(g)(2).

(b) *Deemed satisfaction and reissuance.* Under paragraph (g)(3) of this section, B is treated as satisfying its note for $60 immediately before the sale, and reissuing a new note directly to P with a $60 issue price and a $100 stated redemption price at maturity. On a separate entity basis, S's $40 loss would be a capital loss, and B's $40 income would be ordinary income. Under the matching rule, however, the attributes of S's intercompany item and B's corresponding item must be redetermined to produce the same effect as if the transaction had occurred between divisions of a single corporation. Under paragraph (c)(4)(i) of this section, the attributes of B's corresponding discharge of indebtedness income control the attributes of S's intercompany loss. Accordingly, S's loss is treated as ordinary loss.

(c) *Partial bad debt deduction.* The facts are the same as in paragraph (a) of this *Example 3*, except that S claims a $40 partial bad debt deduction under section 166(a)(2) (rather than selling the note to P). The results are the same as in paragraph (b) of this *Example 3*. B's note is treated as satisfied and reissued with a $60 issue price. S's $40 intercompany deduction and B's $40 corresponding income are both ordinary.

(d) *Insolvent debtor.* The facts are the same as in paragraph (a) of this *Example 3*, except that B is insolvent within the meaning of section 108(d)(3) at the time that S sells the note to P. On a separate entity basis, S's $40 loss would be capital, B's $40 income would be excluded from gross income under section 108(a), and B would reduce attributes under section 108(b) or section 1017. However, under paragraph (g)(3)(ii)(B) of this section, section 108(a) does not apply to B's income to characterize it as excluded from gross income. Accordingly, the attributes of S's intercompany loss and B's corresponding income are redetermined in the same manner as in paragraph (b) of this *Example 3*.

Example 4. Nonintercompany debt becomes intercompany debt. (a) *Facts.* On January 1 of Year 1, B borrows $100 from X in return for B's note providing for $10 of interest annually at the end of each year, and repayment of $100 at the end of Year 5. As of January 1 of Year 3, B has fully performed its obligations, but the note's fair market value is $70. On January 1 of Year 3, P buys all of X's stock. B is solvent within the meaning of section 108(d)(3).

(b) *Deemed satisfied and reissuance.* Under paragraph (g)(4) of this section, B is treated as satisfying its indebtedness for $70 (determined under the principles of § 1.108–2(f)(2)) immediately after X becomes a member. Both X's $30 capital loss under section 1271(a)(1) and B's $30 of discharge of indebtedness income under section 61(a)(12) are taken into account in determining consolidated taxable income for Year 3. Under paragraph (g)(4)(ii)(C) of this section, the attributes of items resulting from the satisfaction are determined on a separate entity basis. But see section 382 and § 1.1502–15 (as appropriate). B is also treated as reissuing a new note. The new note is an intercompany obligation, it has a $70 issue price and $100 stated redemption price at maturity, and the $30 of original issue discount will be taken into account by B and X in the same manner as provided in paragraph (c) of *Example 1* of this paragraph (g)(5).

(c) *Election to file consolidated returns.* Assume instead that B borrows $100 from S during Year 1, but the P group does not file consolidated returns until Year 3. Under paragraph (g)(4) of this section, B's indebtedness is treated as satisfied and a new note reissued immediately after the debt becomes intercompany debt. The satisfaction and reissuance are deemed to occur on January 1 of Year 3, for the fair market value of the note (determined under the principles of § 1.108–2(f)(2)) at that time.

Example 5. Notional principal contracts. (a) *Facts.* On April 1 of Year 1, M1 enters into a contract with counterparty M2 under which, for a term of five years, M1 is obligated to make a payment to M2 each April 1, beginning in Year 2, in an amount equal to the London Interbank Offered Rate (LIBOR), as determined on the immediately preceding April 1, multiplied by a $1,000 notional principal amount. M2 is obligated to make a payment to M1 each April 1, beginning in Year 2, in an amount equal to 8% multiplied by the same notional principal amount. LIBOR is 7.80% on April 1 of Year 1. On April 1 of Year 2, M2 owes $2 to M1.

(b) *Matching rule.* Under § 1.446–3(d), the net income (or net deduction) from a notional principal contract for a taxable year is included in (or deducted from) gross income. Under § 1.446–3(e), the ratable daily portion of M2's obligation to M1 as of December 31 of Year 1 is $1.50 ($2 multiplied by 275/365). Under the matching rule, M1's net income for Year 1 of $1.50 is taken into account to reflect the difference between M2's net deduction of $1.50 taken into account and the $0 recomputed net deduction. Similarly, the $.50 balance of the $2 of net periodic payments made on April 1 of Year 2 is taken into account for Year 2 in M1's and M2's net income and net deduction from the contract.

In addition, the attributes of M1's intercompany income and M2's corresponding deduction are redetermined to produce the same effect as if the transaction had occurred between divisions of a single corporation. Under paragraph (c)(4)(i) of this section, the attributes of M2's corresponding deduction control the attributes of M1's intercompany income. (Although M1 is the selling member with respect to the payment on April 1 of Year 2, it might be the buying member in a subsequent period if it owes the net payment.)

(c) *Dealer*. The facts are the same as in paragraph (a) of this *Example 5*, except that M2 is a dealer in securities, and the contract with M1 is not inventory in the hands of M2. Under section 475, M2 must mark its securities to market at year-end. Assume that under section 475, M2's loss from marking to market the contract with M1 is $100. Under paragraph (g)(3) of this section, M2 is treated as making a $100 payment to M1 to terminate the contract immediately before section 475 is applied. M1's $100 of income from the termination payment is taken into account under the matching rule to reflect M2's deduction under §1.446–3(h). The attributes of M1's intercompany income and M2's corresponding deduction are redetermined to produce the same effect as if the transaction had occurred between divisions of a single corporation. Under paragraph (c)(4)(i) of this section, the attributes of M2's corresponding deduction control the attributes of M1's intercompany income. Accordingly, M1's income is treated as ordinary income. Paragraph (g)(3) of this section also provides that, immediately after section 475 would apply, a new contract is treated as reissued with an upfront payment of $100. Under §1.446–3(f), the deemed $100 up front payment by M1 to M2 is taken into account over the term of the new contract in a manner reflecting the economic substance of the contract (for example, allocating the payment in accordance with the forward rates of a series of cash-settled forward contracts that reflect the specified index and the $1,000 notional principal amount). (The timing of taking items into account is the same if M1, rather than M2, is the dealer subject to the mark-to-market requirement of section 475 at year-end. However in this case, because the attributes of the corresponding deduction control the attributes of the intercompany income, M1's income from the deemed termination payment might be ordinary or capital.)

(h) *Anti-avoidance rules*—(1) *In general*. If a transaction is engaged in or structured with a principal purpose to avoid the purposes of this section (including, for example, by avoiding treatment as an intercompany transaction), adjustments must be made to carry out the purposes of this section.

(2) *Examples*. The anti-avoidance rules of this paragraph (h) are illustrated by the following examples. The examples set forth below do not address common law doctrines or other authorities that might apply to recast a transaction or to otherwise affect the tax treatment of a transaction. Thus, in addition to adjustments under this paragraph (h), the Commissioner can, for example, apply the rules of section 269 or §1.701–2 to disallow a deduction or to recast a transaction.

Example 1. Sale of a partnership interest. (a) *Facts*. S owns land with a $10 basis and $100 value. B has net operating losses from separate return limitation years (SRLYs) subject to limitation under §1.1502–21(c). Pursuant to a plan to absorb the losses without limitation by the SRLY rules, S transfers the land to an unrelated, calendar-year partnership in exchange for a 10% interest in the capital and profits of the partnership in a transaction to which section 721 applies. The partnership does not have a section 754 election in effect. S later sells its partnership interest to B for $100. In the following year, the partnership sells the land to X for $100. Because the partnership does not have a section 754 election in effect, its $10 basis in the land does not reflect B's $100 basis in the partnership interest. Under section 704(c), the partnership's $90 built-in gain is allocated to B, and B's basis in the partnership interest increases to $190 under section 705. In a later year, B sells the partnership interest to a nonmember for $100.

(b) *Adjustments*. Under §1.1502–21(c), the partnership's $90 built-in gain allocated to B ordinarily increases the amount of B's SRLY limitation, and B's $90 loss from its sale of the partnership interest ordinarily is not subject to limitation under the SRLY rules. Because the contribution of property to the partnership and the sale of the partnership interest were part of a plan a principal purpose of which was to achieve a reduction in consolidated tax liability by creating offsetting gain and loss for B while deferring S's intercompany gain, B's allocable share of the partnership's gain from its sale of the land is treated under paragraph (h)(1) of this section as not increasing the amount of B's SRLY limitation.

Example 2. Transitory status as an intercompany obligation. (a) *Facts*. P historically has owned 70% of X's stock and the remaining 30% is owned by unrelated shareholders. On January 1 of Year 1, S borrows $100 from X in return for S's note requiring $10 of interest

annually at the end of each year, and repayment of $100 at the end of Year 20. As of January 1 of Year 3, the P group has substantial net operating loss carryovers, and the fair market value of S's note falls to $70 due to an increase in prevailing market interest rates. X is not permitted under section 166(a)(2) to take into account a $30 loss with respect to the note. Pursuant to a plan to permit X to take into account its $30 loss without disposing of the note, P acquires an additional 10% of X's stock, causing X to become a member, and P subsequently resells the 10% interest. X's $30 loss with respect to the note is a net unrealized built-in loss within the meaning of § 1.1502–15.

(b) *Adjustments.* Under paragraph (g)(4) of this section, X ordinarily would take into account its $30 loss as a result of the note becoming an intercompany obligation, and S would take into account $30 of discharge of indebtedness income. Under § 1.1502–22, X's loss is not combined with items of the other members and the loss would be carried to X's separate return years as a result of X becoming a nonmember. However, the transitory status of S's indebtedness to X as an intercompany obligation is structured with a principal purpose to accelerate the recognition of X's loss. Thus, S's note is treated under paragraph (h)(1) of this section as not becoming an intercompany obligation.

Example 3. Corporate mixing bowl. (a) *Facts.* M1 and M2 are subsidiaries of P. M1 operates a manufacturing business on land it leases from M2. The land is the only asset held by M2. P intends to dispose of the M1 business, including the land owned by M2; P's basis in the M1 stock is equal to the stock's fair market value. M2's land has a value of $20 and a basis of $0 and P has a $0 basis in the stock of M2. In Year 1, with a principal purpose of avoiding gain from the sale of the land (by transferring the land to M1 with a carry-over basis without affecting P's basis in the stock of M1 or M2), M1 and M2 form corporation T; M1 contributes cash in exchange for 80% of the T stock and M2 contributes the land in exchange for 20% of the stock. In Year 3, T liquidates, distributing $20 cash to M2 and the land (plus $60 cash) to M1. Under § 1.1502–34, section 332 applies to both M1 and M2. Under section 337, T recognizes no gain or loss from its liquidating distribution of the land to M1. T has neither gain nor loss on its distribution of cash to M2. In Year 4, P sells all of the stock of M1 to X and liquidates M2.

(b) *Adjustments.* A principal purpose for the formation and liquidation of T was to avoid gain from the sale of M2's land. Thus, under paragraph (h)(1) of this section, M2 must take $20 of gain into account when the stock of M1 is sold to X.

Example 4. Partnership mixing bowl. (a) *Facts.* M1 owns a self-created intangible asset with a $0 basis and a fair market value of $100. M2 owns land with a basis of $100 and a fair market value of $100. In Year 1, with a principal purpose of creating basis in the intangible asset (which would be eligible for amortization under section 197), M1 and M2 form partnership PRS; M1 contributes the intangible asset and M2 contributes the land. X, an unrelated person, contributes cash to PRS in exchange for a substantial interest in the partnership. PRS uses the contributed assets in legitimate business activities. Five years and six months later, PRS liquidates, distributing the land to M1, the intangible to M2, and cash to X. The group reports no gain under sections 707(a)(2)(B) and 737(a) and claims that M2's basis in the intangible asset is $100 under section 732 and that the asset is eligible for amortization under section 197.

(b) *Adjustments.* A principal purpose of the formation and liquidation of PRS was to create additional amortization without an offsetting increase in consolidated taxable income by avoiding treatment as an intercompany transaction. Thus, under paragraph (h)(1) of this section, appropriate adjustments must be made.

Example 5. Sale and leaseback. (a) *Facts.* S operates a factory with a $70 basis and $100 value, and has loss carryovers from SRLYs. Pursuant to a plan to take into account the $30 unrealized gain while continuing to operate the factory, S sells the factory to X for $100 and leases it back on a long-term basis. In the transaction, a substantial interest in the factory is transferred to X. The sale and leaseback are not recharacterized under general principles of Federal income tax law. As a result of S's sale to X, the $30 gain is taken into account and increases S's SRLY limitation.

(b) *No adjustments.* Although S's sale was pursuant to a plan to accelerate the $30 gain, it is not subject to adjustment under paragraph (h)(1) of this section. The sale is not treated as engaged in or structured with a principal purpose to avoid the purposes of this section.

(i) [Reserved]

(j) *Miscellaneous operating rules.* For purposes of this section—

(1) *Successor assets.* Any reference to an asset includes, as the context may require, a reference to any other asset the basis of which is determined, directly or indirectly, in whole or in part, by reference to the basis of the first asset.

(2) *Successor persons*—(i) *In general.* Any reference to a person includes, as the context may require, a reference to a predecessor or successor. For this purpose, a predecessor is a transferor of assets to a transferee (the successor) in a transaction—

(A) To which section 381(a) applies;

(B) In which substantially all of the assets of the transferor are transferred to members in a complete liquidation;

(C) In which the successor's basis in assets is determined (directly or indirectly, in whole or in part) by reference to the basis of the transferor, but the transferee is a successor only with respect to the assets the basis of which is so determined; or

(D) Which is an intercompany transaction, but only with respect to assets that are being accounted for by the transferor in a prior intercompany transaction.

(ii) *Intercompany items*. If the assets of a predecessor are acquired by a successor member, the successor succeeds to, and takes into account (under the rules of this section), the predecessor's intercompany items. If two or more successor members acquire assets of the predecessor, the successors take into account the predecessor's intercompany items in a manner that is consistently applied and reasonably carries out the purposes of this section and applicable provisions of law.

(3) *Multiple triggers*. If more than one corresponding item can cause an intercompany item to be taken into account under the matching rule, the intercompany item is taken into account in connection with the corresponding item most consistent with the treatment of members as divisions of a single corporation. For example, if S sells a truck to B, its intercompany gain from the sale is not taken into account by reference to B's depreciation if the depreciation is capitalized under section 263A as part of B's cost for a building; instead, S's gain relating to the capitalized depreciation is taken into account when the building is sold or as it is depreciated. Similarly, if B purchases appreciated land from S and transfers the land to a lower-tier member in exchange for stock, thereby duplicating the basis of the land in the basis of the stock, items with respect to both the stock and the land can cause S's intercompany gain to be taken into account; if the lower-tier member becomes a nonmember as a result of the sale of its stock, the attributes of S's intercompany gain are determined with respect to the land rather than the stock.

(4) *Multiple or successive intercompany transactions*. If a member's intercompany item or corresponding item affects the accounting for more than one intercompany transaction, appropriate adjustments are made to treat all of the intercompany transactions as transactions between divisions of a single corporation. For example, if S sells property to M, and M sells the property to B, then S, M, and B are treated as divisions of a single corporation for purposes of applying the rules of this section. Similar principles apply with respect to intercompany transactions that are part of the same plan or arrangement. For example, if S sells separate properties to different members as part of the same plan or arrangement, all of the participating members are treated as divisions of a single corporation for purposes of determining the attributes (which might also affect timing) of the intercompany items and corresponding items from each of the properties.

(5) *Acquisition of group*—(i) *Scope*. This paragraph (j)(5) applies only if a consolidated group (the terminating group) ceases to exist as a result of—

(A) The acquisition by a member of another consolidated group of either the assets of the common parent of the terminating group in a reorganization described in section 381(a)(2), or the stock of the common parent of the terminating group; or

(B) The application of the principles of § 1.1502–75(d)(2) or (d)(3).

(ii) *Application*. If the terminating group ceases to exist under circumstances described in paragraph (j)(5)(i) of this section, the surviving group is treated as the terminating group for purposes of applying this section to the intercompany transactions of the terminating group. For example, intercompany items and corresponding items from intercompany transactions between members of the terminating group are taken into account under the rules of this section by the surviving group. This treatment does not apply, however, to members of the terminating group that are not members of the surviving group immediately after the terminating group ceases to exist (for example, under section 1504(a)(3) relating to reconsolidation, or section

1504(c) relating to includible insurance companies).

(6) *Former common parent treated as continuation of group.* If a group terminates because the common parent is the only remaining member, the common parent succeeds to the treatment of the terminating group for purposes of applying this section so long as it neither becomes a member of an affiliated group filing separate returns nor becomes a corporation described in section 1504(b). For example, if the only subsidiary of the group liquidates into the common parent in a complete liquidation to which section 332 applies, or the common parent merges into the subsidiary and the subsidiary is treated as the common parent's successor under paragraph (j)(2)(i) of this section, the taxable income of the surviving corporation is treated as the group's consolidated taxable income in which the intercompany and corresponding items must be included. See § 1.267(f)–1 for additional rules applicable to intercompany losses or deductions.

(7) *Becoming a nonmember.* For purposes of this section, a member is treated as becoming a nonmember if it has a separate return year (including another group's consolidated return year). A member is not treated as having a separate return year if its items are treated as taken into account in computing the group's consolidated taxable income under paragraph (j)(5) or (6) of this section.

(8) *Recordkeeping.* Intercompany and corresponding items must be reflected on permanent records (including work papers). See also section 6001, requiring records to be maintained. The group must be able to identify from these permanent records the amount, location, timing, and attributes of the items, so as to permit the application of the rules of this section for each year.

(9) *Examples.* The operating rules of this paragraph (j) are illustrated generally throughout this section, and by the following examples.

Example 1. Intercompany sale followed by section 351 transfer to member. (a) *Facts.* S holds land for investment with a basis of $70. On January 1 of Year 1, S sells the land to M for $100. M also holds the land for investment. On July 1 of Year 3, M transfers the land to B in exchange for all of B's stock in a transaction to which section 351 applies. Under section 358, M's basis in the B stock is $100. B holds the land for sale to customers in the ordinary course of business and, under section 362(b), B's basis in the land is $100. On December 1 of Year 5, M sells 20% of the B stock to X for $22. In an unrelated transaction on July 1 of Year 8, B sells 20% of the land for $22.

(b) *Definitions.* Under paragraph (b)(1) of this section, S's sale of the land to M and M's transfer of the land to B are both intercompany transactions. S is the selling member and M is the buying member in the first intercompany transaction, and M is the selling member and B is the buying member in the second intercompany transaction. M has no intercompany items under paragraph (b)(2) of this section. Because B acquired the land in an intercompany transaction, B's items from the land are corresponding items to be taken into account under this section. Under the successor asset rule of paragraph (j)(1) of this section, references to the land include references to M's B stock. Under the successor person rule of paragraph (j)(2) of this section, references to M include references to B with respect to the land.

(c) *Timing and attributes resulting from the stock sale.* Under paragraph (c)(3) of this section, M is treated as owning and selling B's stock for purposes of the matching rule even though, as divisions, M could not own and sell stock in B. Under paragraph (j)(3) of this section, both M's B stock and B's land can cause S's intercompany gain to be taken into account under the matching rule. Thus, S takes $6 of its gain into account in Year 5 to reflect the $6 difference between M's $2 gain taken into account from its sale of B stock and the $8 recomputed gain. Under paragraph (j)(4) of this section, the attributes of this gain are determined by treating S, M, and B as divisions of a single corporation. Under paragraph (c)(1) of this section, S's $6 gain and M's $2 gain are treated as long-term capital gain. The gain would be capital on a separate entity basis (assuming that section 341 does not apply), and this treatment is not inconsistent with treating S, M, and B as divisions of a single corporation because the stock sale and subsequent land sale are unrelated transactions and B remains a member following the sale.

(d) *Timing and attributes resulting from the land sale.* Under paragraph (j)(3) of this section, S takes $6 of its gain into account in Year 8 under the matching rule to reflect the $6 difference between B's $2 gain taken into account from its sale of an interest in the land and the $8 recomputed gain. Under paragraph (j)(4) of this section, the attributes of this gain are determined by treating S, M, and B as divisions of a single corporation and taking into account the activities of S, M, and B with respect to the land. Thus, both

S's gain and B's gain might be ordinary income as a result of B's activities. (If B subsequently sells the balance of the land, S's gain taken into account is limited to its remaining $18 of intercompany gain.)

(e) *Sale of successor stock resulting in deconsolidation.* The facts are the same as in paragraph (a) of this *Example 1*, except that M sells 60% of the B stock to X for $66 on December 1 of Year 5 and B becomes a nonmember. Under the matching rule, M's sale of B stock results in $18 of S's gain being taken into account (to reflect the difference between M's $6 gain taken into account and the $24 recomputed gain). Under the acceleration rule, however, the entire $30 gain is taken into account (to reflect B becoming a nonmember, because its basis in the land reflects M's $100 cost basis from the prior intercompany transaction). Under paragraph (j)(4) of this section, the attributes of S's gain are determined by treating S, M, and B as divisions of a single corporation. Because M's cost basis in the land will be reflected by B as a nonmember, all of S's gain is treated as from the land (rather than a portion being from B's stock), and B's activities with respect to the land might therefore result in S's gain being ordinary income.

Example 2. Intercompany sale of member stock followed by recapitalization. (a) *Facts.* Before becoming a member of the P group, S owns P stock with a basis of $70. On January 1 of Year 1, P buys all of S's stock. On July 1 of Year 3, S sells the P stock to M for $100. On December 1 of Year 5, P acquires M's original P stock in exchange for new P stock in a recapitalization described in section 368(a)(1)(E).

(b) *Timing and attributes.* Although P's basis in the stock acquired from M is eliminated under paragraph (f)(4) of this section, the new P stock received by M is exchanged basis property (within the meaning of section 7701(a)(44)) having a basis under section 358 equal to M's basis in the original P stock. Under the successor asset rule of paragraph (j)(1) of this section, references to M's original P stock include references to M's new P stock. Because it is still possible to take S's intercompany item into account under the matching rule with respect to the successor asset, S's gain is not taken into account under the acceleration rule as a result of the basis elimination under paragraph (f)(4) of this section. Instead, the gain is taken into account based on subsequent events with respect to M's new P stock (for example, a subsequent distribution or redemption of the new stock).

Example 3. Back-to-back intercompany transactions—matching. (a) *Facts.* S holds land for investment with a basis of $70. On January 1 of Year 1, S sells the land to M for $90. M also holds the land for investment. On July 1 of Year 3, M sells the land for $100 to B, and B holds the land for sale to customers in the ordinary course of business. During Year 5, B sells all of the land to customers for $105.

(b) *Timing.* Under paragraph (b)(1) of this section, S's sale of the land to M and M's sale of the land to B are both intercompany transactions. S is the selling member and M is the buying member in the first intercompany transaction, and M is the selling member and B is the buying member in the second intercompany transaction. Under paragraph (j)(4) of this section, S, M and B are treated as divisions of a single corporation for purposes of determining the timing of their items from the intercompany transactions. See also paragraph (j)(2) of this section (B is treated as a successor to M for purposes of taking S's intercompany gain into account). Thus, S's $20 gain and M's $10 gain are both taken into account in Year 5 to reflect the difference between B's $5 gain taken into account with respect to the land and the $35 recomputed gain (the gain that B would have taken into account if the intercompany sales had been transfers between divisions of a single corporation, and B succeeded to S's $70 basis).

(c) *Attributes.* Under paragraphs (j)(4) of this section, the attributes of the intercompany items and corresponding items of S, M, and B are also determined by treating S, M, and B as divisions of a single corporation. For example, the attributes of S's and M's intercompany items are determined by taking B's activities into account.

Example 4. Back-to-back intercompany transactions—acceleration. (a) *Facts.* During Year 1, S performs services for M in exchange for $10 from M. S incurs $8 of employee expenses. M capitalizes the $10 cost of S's services under section 263 as part of M's cost to acquire real property from X. Under its separate entity method of accounting, S would take its income and expenses into account in Year 1. M holds the real property for investment and, on July 1 of Year 5, M sells it to B at a gain. B also holds the real property for investment. On December 1 of Year 8, while B still owns the real property, P sells all of M's stock to X and M becomes a nonmember.

(b) *M's items.* M takes its gain into account immediately before it becomes a nonmember. Because the real property stays in the group, the acceleration rule redetermines the attributes of M's gain under the principles of the matching rule as if B sold the real property to an affiliated corporation that is not a member of the group for a cash payment equal to B's adjusted basis in the real property, and S, M, and B were divisions of a single corporation. Thus, M's gain is capital gain.

(c) *S's items.* Under paragraph (b)(2)(ii) of this section, S includes the $8 of expenses in determining its $2 intercompany income. In Year 1, S takes into account $8 of income and $8 of expenses. Under paragraph (j)(4) of this section, appropriate adjustments must

be made to treat both S's performance of services for M and M's sale to B as occurring between divisions of a single corporation. Thus, S's $2 of intercompany income is not taken into account as a result of M becoming a nonmember, but instead will be taken into account based on subsequent events (e.g., under the matching rule based on B's sale of the real property to a nonmember, or under the acceleration rule based on P's sale of the stock of S or B to a nonmember). See the successor person rules of paragraph (j)(2) of this section (B is treated as a successor to M for purposes of taking S's intercompany income into account).

(d) *Sale of S's stock*. The facts are the same as in paragraph (a) of this *Example 4*, except that P sells all of S's stock (rather than M's stock) and S becomes a nonmember on July 1 of Year 5. S's remaining $2 of intercompany income is taken into account immediately before S becomes a nonmember. Because S's intercompany income is not from an intercompany sale, exchange, or distribution of property, the attributes of the intercompany income are determined on a separate entity basis. Thus, S's $2 of intercompany income is ordinary income. M does not take any of its intercompany gain into account as a result of S becoming a nonmember.

(e) *Intercompany income followed by intercompany loss*. The facts are the same as in paragraph (a) of this *Example 4*, except that M sells the real property to B at a $1 loss (rather than a gain). M takes its $1 loss into account under the acceleration rule immediately before M becomes a nonmember. But see §1.267(f)–1 (which might further defer M's loss if M and B remain in a controlled group relationship after M becomes a nonmember). Under paragraph (j)(4) of this section appropriate adjustments must be made to treat the group as if both intercompany transactions occurred between divisions of a single corporation. Accordingly, P's sale of M stock also results in S taking into account $1 of intercompany income as capital gain to offset M's $1 of corresponding capital loss. The remaining $1 of S's intercompany income is taken into account based on subsequent events.

Example 5. Successor group. (a) *Facts*. On January 1 of Year 1, B borrows $100 from S in return for B's note providing for $10 of interest annually at the end of each year, and repayment of $100 at the end of Year 20. As of January 1 of Year 3, B has paid the interest accruing under the note. On that date, X acquires all of P's stock and the former P group members become members of the X consolidated group.

(b) *Successor*. Under paragraph (j)(5) of this section, although B's note ceases to be an intercompany obligation of the P group, the note is not treated as satisfied and reissued under paragraph (g) of this section as a result of X's acquisition of P stock. Instead, the X consolidated group succeeds to the treatment of the P group for purposes of paragraph (g) of this section, and B's note is treated as an intercompany obligation of the X consolidated group.

(c) *No subgroups*. The facts are the same as in paragraph (a) of this *Example 5*, except that X simultaneously acquires the stock of S and B from P (rather than X acquiring all of P's stock). Paragraph (j)(5) of this section does not apply to X's acquisitions. Unless an exception described in paragraph (g)(3)(i)(B) applies, B's note is treated as satisfied immediately before S and B become nonmembers, and reissued immediately after they become members of the X consolidated group. The amount at which the note is satisfied and reissued under paragraph (g)(3) of this section is based on the fair market value of the note at the time of P's sales to X. Paragraph (g)(4) of this section does not apply to the reissued B note in the X consolidated group, because the new note is always an intercompany obligation of the X consolidated group.

Example 6. Liquidation—80% distributee. (a) *Facts*. X has had preferred stock described in section 1504(a)(4) outstanding for several years. On January 1 of Year 1, S buys all of X's common stock for $60, and B buys all of X's preferred stock for $40. X's assets have a $0 basis and $100 value. On July 1 of Year 3, X distributes all of its assets to S and B in a complete liquidation. Under §1.1502–34, section 332 applies to both S and B. Under section 337, X has no gain or loss from its liquidating distribution to S. Under sections 336 and 337(c), X has a $40 gain from its liquidating distribution to B. B has a $40 basis under section 334(a) in the assets received from X, and S has a $0 basis under section 334(b) in the assets received from X.

(b) *Intercompany items from the liquidation*. Under the matching rule, X's $40 gain from its liquidating distribution to B is not taken into account under this section as a result of the liquidation (and therefore is not yet reflected under §§1.1502–32 and 1.1502–33). Under the successor person rule of paragraph (j)(2)(i) of this section, S and B are both successors to X. Under section 337(c), X recognizes gain or loss only with respect to the assets distributed to B. Under paragraph (j)(2)(ii) of this section, to be consistent with the purposes of this section, S succeeds to X's $40 intercompany gain. The gain will be taken into account by S under the matching and acceleration rules of this section based on subsequent events. (The allocation of the intercompany gain to S does not govern the allocation of any other attributes.)

Example 7. Liquidation—no 80% distributee. (a) *Facts*. X has only common stock outstanding. On January 1 of Year 1, S buys 60% of X's stock for $60, and B buys 40% of X's stock for $40. X's assets have a $0 basis and $100 value. On July 1 of Year 3, X distributes

all of its assets to S and B in a complete liquidation. Under § 1.1502–34, section 332 applies to both S and B. Under sections 336 and 337(c), X has a $100 gain from its liquidating distributions to S and B. Under section 334(b), S has a $60 basis in the assets received from X and B has a $40 basis in the assets received from X.

(b) *Intercompany items from the liquidation.* Under the matching rule, X's $100 intercompany gain from its liquidating distributions to S and B is not taken into account under this section as a result of the liquidation (and therefore is not yet reflected under §§ 1.1502–32 and 1.1502–33). Under the successor person rule of paragraph (j)(2)(i) of this section, S and B are both successors to X. Under paragraph (j)(2)(ii) of this section, to be consistent with the purposes of this section, S succeeds to X's $40 intercompany gain with respect to the assets distributed to B, and B succeeds to X's $60 intercompany gain with respect to the assets distributed to S. The gain will be taken into account by S and B under the matching and acceleration rules of this section based on subsequent events. (The allocation of the intercompany gain does not govern the allocation of any other attributes.)

(k) *Cross references*—(1) *Section 108.* See § 1.108–3 for the treatment of intercompany deductions and losses as subject to attribute reduction under section 108(b).

(2) *Section 263A(f).* See section 263A(f) and § 1.263A–9(g)(5) for special rules regarding interest from intercompany transactions.

(3) *Section 267(f).* See section 267(f) and § 1.267(f)–1 for special rules applicable to certain losses and deductions from transactions between members of a controlled group.

(4) *Section 460.* See § 1.460–4(j) for special rules regarding the application of section 460 to intercompany transactions.

(5) *Section 469.* See § 1.469–1(h) for special rules regarding the application of section 469 to intercompany transactions.

(6) *§ 1.1502–80.* See § 1.1502–80 for the non-application of certain Internal Revenue Code rules.

(l) *Effective dates*—(1) *In general.* This section applies with respect to transactions occurring in years beginning on or after July 12, 1995. If both this section and prior law apply to a transaction, or neither applies, with the result that items may be duplicated, omitted, or eliminated in determining taxable income (or tax liability), or items may be treated inconsistently, prior law (and not this section) applies to the transaction. For example, S's and B's items from S's sale of property to B which occurs in a consolidated return year beginning before July 12, 1995, are taken into account under prior law, even though B may dispose of the property in a consolidated return year beginning on or after July 12, 1995. Similarly, an intercompany distribution to which a shareholder becomes entitled in a consolidated return year beginning before July 12, 1995, but which is distributed in a consolidated return year beginning on or after that date is taken into account under prior law (generally when distributed), because this section generally takes dividends into account when the shareholder becomes entitled to them but this section does not apply at that time. If application of prior law to S's deferred gain or loss from a deferred intercompany transaction (as defined under prior law) occurring in a consolidated return year beginning prior to July 12, 1995, would be affected by an intercompany transaction (as defined under this section) occurring in a consolidated return year beginning on or after July 12, 1995, S's deferred gain or loss continues to be taken into account as provided under prior law, and the items from the subsequent intercompany transaction are taken into account under this section. Appropriate adjustments must be made to prevent items from being duplicated,omitted, or eliminated in determining taxable income as a result of the application of both this section and prior law to the successive transactions, and to ensure the proper application of prior law.

(2) *Avoidance transactions.* This paragraph (l)(2) applies if a transaction is engaged in or structured on or after April 8, 1994, with a principal purpose to avoid the rules of this section (and instead to apply prior law). If this paragraph (l)(2) applies, appropriate adjustments must be made in years beginning on or after July 12, 1995, to prevent the avoidance, duplication, omission, or elimination of any item (or tax liability), or any other inconsistency with the rules of this section. For example, if S is a dealer in real property

and sells land to B on March 16, 1995 with a principal purpose of converting any future appreciation in the land to capital gain, B's gain from the sale of the land on May 11, 1997 might be characterized as ordinary income under this paragraph (l)(2).

(3) *Election for certain stock elimination transactions*—(i) *In general*. A group may elect pursuant to this paragraph (l)(3) to apply this section (including the elections available under paragraph (f)(5)(ii) of this section) to stock elimination transactions to which prior law would otherwise apply. If an election is made, this section, and not prior law, applies to determine the timing and attributes of S's and B's gain or loss from stock with respect to all stock elimination transactions.

(ii) *Stock elimination transactions*. For purposes of this paragraph (l)(3), a stock elimination transaction is a transaction in which stock transferred from S to B—

(A) Is cancelled or redeemed on or after July 12, 1995;

(B) Is treated as cancelled in a liquidation pursuant to an election under section 338(h)(10) with respect to a qualified stock purchase with an acquisition date on or after July 12, 1995;

(C) Is distributed on or after July 12, 1995; or

(D) Is exchanged on or after July 12, 1995 for stock of a member (determined immediately after the exchange) in a transaction that would cause S's gain or loss from the transfer to be taken into account under prior law.

(iii) *Time and manner of making election*. An election under this paragraph (l)(3) is made by attaching to a timely filed original return (including extensions) for the consolidated return year including July 12, 1995 a statement entitled ''[Insert Name and Employer Identification Number of Common Parent] HEREBY ELECTS THE APPLICATION OF §1.1502–13(l)(3).'' See paragraph (f)(5)(ii)(E) of this section for the manner of electing the relief provisions of paragraph (f)(5)(ii) of this section.

(4) *Prior law*. For transactions occurring in S's years beginning before July 12, 1995, see the applicable regulations issued under section 1502. See §§1.1502–13, 1.1502–13T, 1.1502–14, 1.1502–14T, 1.1502–31, and 1.1502–32 (as contained in the 26 CFR part 1 edition revised as of April 1, 1995).

(5) *Consent to adopt method of accounting*. For intercompany transactions occurring in a consolidated group's first taxable year beginning on or after July 12, 1995, the Commissioner's consent under section 446(e) is hereby granted for any changes in methods of accounting that are necessary solely by reason of the timing rules of this section. Changes in method of accounting for these transactions are to be effected on a cut-off basis.

[T.D. 8597, 60 FR 36685, July 18, 1995, as amended by T.D. 8660, 61 FR 10449, 10450, Mar. 14, 1996; T.D. 8677, 61 FR 33323, June 27, 1996; T.D. 8660, 62 FR 12097, Mar. 14, 1997; T.D. 8677, 62 FR 12542, Mar. 17, 1997; T.D. 8823, 64 FR 36099, July 2, 1999; T.D. 8883, 65 FR 31078, May 16, 2000]

§1.1502–15 SRLY limitation on built-in losses.

(a) *SRLY limitation*. Except as provided in paragraph (f) of this section (relating to built-in losses of the common parent) and paragraph (g) of this section (relating to an overlap with section 382), built-in losses are subject to the SRLY limitation under §§1.1502–21(c) and 1.1502–22(c) (including applicable subgroup principles). Built-in losses are treated as deductions or losses in the year recognized, except for the purpose of determining the amount of, and the extent to which the built-in loss is limited by, the SRLY limitation for the year in which it is recognized. Solely for such purpose, a built-in loss is treated as a hypothetical net operating loss carryover or net capital loss carryover arising in a SRLY, instead of as a deduction or loss in the year recognized. To the extent that a built-in loss is allowed as a deduction under this section in the year it is recognized, it offsets any consolidated taxable income for the year before any loss carryovers or carrybacks are allowed as a deduction. To the extent not so allowed, it is treated as a separate net operating loss or net capital loss carryover or carryback arising in the year of recognition and, under §1.1502–21(c) or 1.1502–22(c), the year of recognition is treated as a SRLY.

(b) *Built-in losses*—(1) *Defined*. If a corporation has a net unrealized built-

in loss under section 382(h)(3) (as modified by this section) on the day it becomes a member of the group (whether or not the group is a consolidated group), its deductions and losses are built-in losses under this section to the extent they are treated as recognized built-in losses under section 382(h)(2)(B) (as modified by this section). This paragraph (b) generally applies separately with respect to each member, but see paragraph (c) of this section for circumstances in which it is applied on a subgroup basis.

(2) *Operating rules.* Solely for purposes of applying paragraph (b)(1) of this section, the principles of §1.1502–94(c) apply with appropriate adjustments, including the following:

(i) *Stock acquisition.* A corporation is treated as having an ownership change under section 382(g) on the day the corporation becomes a member of a group, and no other events (e.g., a subsequent ownership change under section 382(g) while it is a member) are treated as causing an ownership change.

(ii) *Asset acquisition.* In the case of an asset acquisition by a group, the assets and liabilities acquired directly from the same transferor (whether corporate or non-corporate, foreign or domestic) pursuant to the same plan are treated as the assets and liabilities of a corporation that becomes a member of the group (and has an ownership change) on the date of the acquisition.

(iii) *Recognized built-in gain or loss.* A loss that is included in the determination of net unrealized built-in gain or loss and that is recognized but disallowed or deferred (e.g., under §1.1502–20 or section 267) is not treated as a built-in loss unless and until the loss would be allowed during the recognition period without regard to the application of this section. Section 382(h)(1)(B)(ii) does not apply to the extent it limits the amount of recognized built-in loss that may be treated as a pre-change loss to the amount of the net unrealized built-in loss.

(c) *Built-in losses of subgroups*—(1) *In general.* In the case of a subgroup, the principles of paragraph (b) of this section apply to the subgroup, and not separately to its members. Thus, the net unrealized built-in loss and recognized built-in loss for purposes of paragraph (b) of this section are based on the aggregate amounts for each member of the subgroup.

(2) *Members of subgroups.* A subgroup is composed of those members that have been continuously affiliated with each other for the 60 consecutive month period ending immediately before they become members of the group in which the loss is recognized. A member remains a member of the subgroup until it ceases to be affiliated with the loss member. For this purpose, the principles of §1.1502–21(c)(2)(iv) through (vi) apply with appropriate adjustments.

(3) *Coordination of 60 month affiliation requirement with the overlap rule.* If one or more corporations become members of a group and are included in the determination of a net unrealized built-in loss that is subject to the overlap rule described in paragraph (g)(1) of this section, then for purposes of paragraph (c)(2) of this section, such corporations that become members of the group are treated as having been affiliated for 60 consecutive months with the common parent of the group and are also treated as having been affiliated with any other members who have been affiliated or are treated as having been affiliated with the common parent at such time. The corporations are treated as having been affiliated with such other members for the same period of time that those members have been affiliated or are treated as having been affiliated with the common parent. If two or more corporations become members of the group at the same time, but this paragraph (c)(3) does not apply to every such corporation, then immediately after the corporations become members of the group, and solely for purposes of paragraph (c)(2) of this section, the corporations to which this paragraph (c)(3) applies are treated as having not been previously affiliated with the corporations to which this paragraph (c)(3) does not apply. If the common parent has become the common parent of an existing group within the previous five year period in a transaction described in §1.1502–75(d)(2)(ii) or (3), the principles of §§1.1502–91(g)(6) and 1.1502–96(a)(2)(iii) shall apply.

(4) *Built-in amounts*. Solely for purposes of determining whether the subgroup has a net unrealized built-in loss or whether it has a recognized built-in loss, the principles of § 1.1502–91(g) and (h) apply with appropriate adjustments.

(d) *Examples*. For purposes of the examples in this section, unless otherwise stated, all groups file consolidated returns, all corporations have calendar taxable years, the facts set forth the only corporate activity, value means fair market value and the adjusted basis of each asset equals its value, all transactions are with unrelated persons, and the application of any limitation or threshold under section 382 is disregarded. The principles of this section are illustrated by the following examples:

Example 1. Determination of recognized built-in loss. (i) Individual A owns all of the stock of P and T. T has two depreciable assets. Asset 1 has an unrealized loss of $55 (basis $75, value $20), and asset 2 has an unrealized gain of $20 (basis $30, value $50). P acquires all the stock of T from Individual A during Year 1, and T becomes a member of the P group. P's acquisition of T is not an ownership change as defined by section 382(g). Paragraph (g) of this section does not apply because there is not an overlap of the application of the rules contained in paragraph (a) of this section and section 382.

(ii) Under paragraph (b)(2)(i) of this section, and solely for purposes of applying paragraph (b)(1) of this section, T is treated as having an ownership change under section 382(g) on becoming a member of the P group. Under paragraph (b)(1) of this section, none of T's $55 of unrealized loss is treated as a built-in loss unless T has a net unrealized built-in loss under section 382(h)(3) on becoming a member of the P group.

(iii) Under section 382(h)(3)(A), T has a $35 net unrealized built-in loss on becoming a member of the P group (($55)+$20=($35)). Assume that this amount exceeds the threshold requirement in section 382(h)(3)(B). Under section 382(h)(2)(B), the entire amount of T's $55 unrealized loss is treated as a built-in loss to the extent it is recognized during the 5-year recognition period described in section 382(h)(7). Under paragraph (b)(2)(iii) of this section, the restriction under section 382(h)(1)(B)(ii), which limits the amount of recognized built-in loss that is treated as pre-change loss to the amount of the net unrealized built-in loss, is inapplicable for this purpose. Consequently, the entire $55 of unrealized loss (not just the $35 net unrealized loss) is treated under paragraph (b)(1) of this section as a built-in loss to the extent it is recognized within 5 years of T's becoming a member of the P group. Under paragraph (a) of this section, a built-in loss is subject to the SRLY limitation under § 1.1502–21(c)(1).

(iv) Under paragraph (b)(2)(ii) of this section, the built-in loss would similarly be subject to a SRLY limitation under § 1.1502–21(c)(1) if T transferred all of its assets and liabilities to a subsidiary of the P group in a single transaction described in section 351. To the extent the built-in loss is recognized within 5 years of T's transfer, all of the items contributed by the acquiring subsidiary to consolidated taxable income (and not just the items attributable to the assets and liabilities transferred by T) are included for purposes of determining the SRLY limitation under § 1.1502–21(c)(1).

Example 2. Actual application of section 382 not relevant. (i) Individual A owns all of the stock of P, and Individual B owns all of the stock of T. T has two depreciable assets. Asset 1 has an unrealized loss of $25 (basis $75, value $50), and asset 2 has an unrealized gain of $20 (basis $30, value $50). P buys 55 percent of the stock of T in January of Year 1, resulting in an ownership change of T under section 382(g). During March of Year 2, P buys the 45 percent balance of the T stock, and T becomes a member of the P group.

(ii) Although T has an ownership change for purposes of section 382 in Year 1 and not Year 2, T's joining the P group in Year 2 is treated as an ownership change under section 382(g) solely for purposes of this section. Consequently, for purposes of this section, whether T has a net unrealized built-in loss under section 382(h)(3) is determined as if the day T joined the P group were a change date.

Example 3. Determination of a recognized built-in loss of a subgroup. (i) Individual A owns all of the stock of P, S, and M. P and M are each the common parent of a consolidated group. During Year 1, P acquires all of the stock of S from Individual A, and S becomes a member of the P group. P's acquisition of S is not an ownership change as defined by section 382(g). At the beginning of Year 7, M acquires all of the stock of P from Individual A, and P and S become members of the M group. M's acquisitions of P and S are also not ownership changes as defined by section 382(g). At the time of M's acquisition of the P stock, P has (disregarding the stock of S) a $10 net unrealized built-in gain (two depreciable assets, asset 1 with a basis of $35 and a value of $55, and asset 2 with a basis of $55 and a value of $45), and S has a $75 net unrealized built-in loss (two depreciable assets, asset 3 with a basis of $95 and a value of $10, and asset 4 with a basis of $10 and a value of $20).

(ii) Under paragraph (c) of this section, P and S compose a subgroup on becoming members of the M group because P and S were continuously affiliated for the 60 month

period ending immediately before they became members of the M group. Consequently, paragraph (b) of this section does not apply to P and S separately. Instead, their separately computed unrealized gains and losses are aggregated for purposes of determining whether, and the extent to which, any unrealized loss is treated as built-in loss under this section and is subject to the SRLY limitation under § 1.1502–21(c).

(iii) Under paragraph (c) of this section, the P subgroup has a net unrealized built-in loss on the day P and S become members of the M group, determined by treating the day they become members as a change date. The net unrealized built-in loss is the aggregate of P's net unrealized built-in gain of $10 and S's net unrealized built-in loss of $75, or an aggregate net unrealized built-in loss of $65. (The stock of S owned by P is disregarded for purposes of determining the net unrealized built-in loss. However, any loss allowed on the sale of the stock within the recognition period is taken into account in determining recognized loss.) Assume that the $65 net unrealized built-in loss exceeds the threshold requirement under section 382(h)(3)(B).

(iv) Under paragraphs (b)(1), (b)(2)(iii), and (c) of this section, a loss recognized during the 5-year recognition period on an asset of P or S held on the day that P and S became members of the M group is a built-in loss except to the extent the group establishes that such loss exceeds the amount by which the adjusted basis of such asset on the day the member became a member exceeded the fair market value of such asset on that same day. If P sells asset 2 for $45 in Year 7 and recognizes a $10 loss, the entire $10 loss is treated as a built-in loss under paragraphs (b)(2)(iii) and (c) of this section. If S sells asset 3 for $10 in Year 7 and recognizes an $85 loss, the entire $85 loss is treated as a built-in loss under paragraphs (b)(2)(iii) and (c) of this section (not just the $55 balance of the P subgroup's $65 net unrealized built-in loss).

(v) The determination of whether P and S constitute a SRLY subgroup for purposes of loss carryovers and carrybacks, and the extent to which built-in losses are not allowed under the SRLY limitation, is made under § 1.1502–21(c).

Example 4. Computation of SRLY limitation. (i) Individual A owns all of the stock of P, the common parent of a consolidated group. During Year 1, Individual A forms T by contributing $300, and T sustains a $100 net operating loss. During Year 2, T's assets decline in value to $100. At the beginning of Year 3, P acquires all the stock of T from Individual A, and T becomes a member of the P group with a net unrealized built-in loss of $100. P's acquisition of T is not an ownership change as defined by section 382(g). Assume that $100 exceeds the threshold requirements of section 382(h)(3)(B). During Year 3, T recognizes its unrealized built-in loss as a $100 ordinary loss. The members of the P group contribute the following net income to the consolidated taxable income of the P group (disregarding T's recognized built-in loss and any consolidated net operating loss deduction under § 1.1502–21) for Years 3 and 4:

	Year 3	Year 4	Total
P group (without T)	$100	$100	$200
T	60	40	100
CTI	160	140	300

(ii) Under paragraph (b) of this section, T's $100 ordinary loss in Year 3 (not taken into account in the consolidated taxable income computations above) is a built-in loss. Under paragraph (a) of this section, the built-in loss is treated as a net operating loss carryover for purposes of determining the SRLY limitation under § 1.1502–21(c).

(iii) For Year 3, § 1.1502–21(c) limits T's $100 built-in loss and $100 net operating loss carryover from Year 1 to the aggregate of the P group's consolidated taxable income through Year 3, determined by reference to only T's items. For this purpose, consolidated taxable income is determined without regard to any consolidated net operating loss deductions under § 1.1502–21(a).

(iv) The P group's consolidated taxable income through Year 3 is $60 when determined by reference to only T's items. Under § 1.1502–21(c), the SRLY limitation for Year 3 is therefore $60.

(v) Under paragraph (a) of this section, the $100 built-in loss is treated as a current deduction for all purposes other than determination of the SRLY limitation under § 1.1502–21(c). Consequently, a deduction for the built-in loss is allowed in Year 3 before T's loss carryover from Year 1 is allowed, but only to the extent of the $60 SRLY limitation. None of T's Year 1 loss carryover is allowed because the built-in loss ($100) exceeds the SRLY limitation for Year 3.

(vi) The $40 balance of the built-in loss that is not allowed in Year 3 because of the SRLY limitation is treated as a $40 net operating loss arising in Year 3 that is carried to other years in accordance with the rules of § 1.1502–21(b). The $40 net operating loss is treated under paragraph (a) of this section and § 1.1502–21(c)(1)(ii) as a loss carryover or carryback from Year 3 that arises in a SRLY, and is subject to the rules of § 1.1502–21 (including § 1.1502–21(c)) rather than this section. See also § 1.1502–21(c)(1)(iii) *Example 4*.

(vii) The facts are the same as in paragraphs (i) through (vi) of this *Example 4*, except that T has an additional built-in loss when it joins the P group which is recognized in Year 4. For purposes of determining the SRLY limitation for this additional loss in Year 4 (or any subsequent year), the $60 of built-in loss allowed as a deduction in Year

3 is treated under paragraph (a) of this section as a deduction in Year 3 that reduces the P group's consolidated taxable income when determined by reference to only T's items.

Example 5. Built-in loss exceeding consolidated taxable income in the year recognized. (i) Individual A owns all of the stock of P and T. During Year 1, P acquires all the stock of T from Individual A, and T becomes a member of the P group. P's acquisition of T was not an ownership change as defined by section 382(g). At the time of acquisition, T has a noncapital asset with an unrealized loss of $45 (basis $100, value $55), which exceeds the threshold requirements of section 382(h)(3)(B). During Year 2, T sells its asset for $55 and recognizes the unrealized built-in loss. The P group has $10 of consolidated taxable income in Year 2, computed by disregarding T's recognition of the $45 built-in loss and the consolidated net operating loss deduction, while the consolidated taxable income would be $25 if determined by reference to only T's items (other than the $45 loss).

(ii) T's $45 loss is recognized in Year 2 and, under paragraph (b) of this section, constitutes a built-in loss. Under paragraph (a) of this section and §1.1502–21(c)(1)(ii), the loss is treated as a net operating loss carryover to Year 2 for purposes of applying the SRLY limitation under §1.1502–21(c).

(iii) For Year 2, T's SRLY limitation is the aggregate of the P group's consolidated taxable income through Year 2 determined by reference to only T's items. For this purpose, consolidated taxable income is determined by disregarding any built-in loss that is treated as a net operating loss carryover, and any consolidated net operating loss deductions under §1.1502–21(a). Consolidated taxable income so determined is $25.

(iv) Under §1.1502–21(c), $25 of the $45 built-in loss could be deducted in Year 2. Because the P group has only $10 of consolidated taxable income (determined without regard to the $45), the $25 loss creates a consolidated net operating loss of $15. This loss is carried back or forward under the rules of §1.1502–21(b) and absorbed under the rules of §1.1502–21(a). This loss is not treated as arising in a SRLY (see §1.1502–21(c)(1)(ii)) and therefore is not subject to the SRLY limitation under §1.1502–21(c) in any consolidated return year of the group to which it is carried. The remaining $20 is treated as a loss carryover arising in a SRLY and is subject to the limitation of §1.1502–21(c) in the year to which it is carried.

(e) *Predecessors and successors.* For purposes of this section, any reference to a corporation or member includes, as the context may require, a reference to a successor or predecessor, as defined in §1.1502–1(f)(4).

(f) *Built-in losses recognized by common parent of group*— (1) *General rule.* Paragraph (a) of this section does not apply to any loss recognized by the group on an asset held by the common parent on the date the group is formed. Following an acquisition described in §1.1502–75(d)(2) or (3), references to the common parent are to the corporation that was the common parent immediately before the acquisition.

(2) *Anti-avoidance rule.* If a corporation that becomes a common parent of a group acquires assets with a net unrealized built-in loss in excess of the threshold requirement of section 382(h)(3)(B) (and thereby increases its net unrealized built-in loss or decreases its net unrealized built-in gain) prior to, and in anticipation of, the formation of the group, paragraph (f)(1) of this section does not apply.

(g) *Overlap with section 382*—(1) *General rule.* The limitations provided in §§1.1502–21(c) and 1.1502–22(c) do not apply to recognized built-in losses or to loss carryovers or carrybacks attributable to recognized built-in losses when the application of paragraph (a) of this section results in an overlap with the application of section 382.

(2) *Definitions*—(i) *Generally.* For purposes of this paragraph (g), the definitions and nomenclature contained in section 382, the regulations thereunder, and §§1.1502–90 through 1.1502–99 apply.

(ii) *Overlap*—(A) An overlap of the application of paragraph (a) of this section and the application of section 382 with respect to built-in losses occurs if a corporation becomes a member of a consolidated group (the SRLY event) within six months of the change date of an ownership change giving rise to a section 382(a) limitation that would apply with respect to the corporation's recognized built-in losses (the section 382 event). Except as provided in paragraph (g)(3) of this section, application of the overlap rule does not require that the size and composition of the corporation's net unrealized built-in loss is the same on the date of the section 382 event and the SRLY event.

(B) For special rules in the event that there is a SRLY subgroup and/or a loss subgroup as defined in §1.1502–91(d)(2) with respect to built-in losses, see paragraph (g)(4) of this section.

(3) *Operating rules*—(i) *Section 382 event before SRLY event*. If a SRLY event occurs on the same date as a section 382 event or within the six month period beginning on the date of the section 382 event, paragraph (g)(1) of this section applies beginning with the tax year that includes the SRLY event. Paragraph (g)(1) of this section does not apply, however, if a corporation that would otherwise be subject to the overlap rule acquires assets from a person other than a member of the group with a net unrealized built-in loss in excess of the threshold requirement of section 382(h)(3)(B) (and thereby increases its net unrealized built-in loss) after the section 382 event, and before the SRLY event.

(ii) *SRLY event before section 382 event*. If a section 382 event occurs within the period beginning the day after the SRLY event and ending six months after the SRLY event, paragraph (g)(1) of this section applies starting with the first tax year that begins after the section 382 event. However, paragraph (g)(1) of this section does not apply at any time if a corporation that otherwise would be subject to paragraph (g)(1) of this section transfers assets with an unrealized built-in loss to another member of the group after the SRLY event, but before the section 382 event, unless the corporation recognizes the built-in loss upon the transfer.

(4) *Subgroup rules*. In general, in the case of built-in losses for which there is a SRLY subgroup and the corporations joining the group at the time of the SRLY event also constitute a loss subgroup (as defined in §1.1502–91(d)(2)), the principles of this paragraph (g) apply to the SRLY subgroup, and not separately to its members. However, paragraph (g)(1) of this section applies with respect to built-in losses only if—

(i) All members of the SRLY subgroup with respect to those built-in losses are also included in a loss subgroup (as defined in §1.1502–91(d)(2)); and

(ii) All members of a loss subgroup (as defined in §1.1502–91(d)(2)) are also members of a SRLY subgroup with respect to those built-in losses.

(5) *Asset acquisitions*. Notwithstanding the application of this paragraph (g), paragraph (a) of this section applies to asset acquisitions by the corporation that occurs after the latter of the SRLY event and the section 382 event. See, paragraph (b)(2)(ii) of this section.

(6) *Examples*. The principles of this paragraph (g) are illustrated by the following examples:

Example 1. Determination of subgroup. (i) Individual A owns all of the stock of P, P1, and S. In Year 1, P acquires all of the stock of P1, and they file a consolidated return. In Year 3, P acquires all of the stock of S, and S joins the P group. Individual B, unrelated to Individual A, owns all of the stock of M and K, each the common parent of a consolidated group. Individual C, unrelated to either Individual A or Individual B, owns all of the stock of T.

(ii) At the beginning of Year 7, M acquires all of the stock of P from Individual A, and, as a result, P, P1, and S become members of the M group. At the time of M's acquisition of the P stock, P has a $15 net unrealized built-in loss (disregarding the stock of P1), P1 has a net unrealized built-in gain of $10, and S has a net unrealized built-in gain of $5.

(iii) During Year 8, M acquires all of the stock of T, and T joins the M group. At the time of M's acquisition of the T stock, T had an unrealized built-in loss of $15. At the beginning of Year 9, K acquires all of the stock of M from Individual B, and the members of the M consolidated group including P, P1, S, and T become members of the K group. At the time of K's acquisition of the M stock, M has (disregarding the stock of P and T) a $15 net unrealized built-in loss, P has a $20 net unrealized built-in loss (disregarding the stock of P1), P1 has a net unrealized built-in gain of $5, S has a net unrealized built-in loss of $35, and T has a $15 net unrealized built-in loss.

(iv) M's acquisition of P in Year 7 results in P, P1, and S becoming members of the M group (the SRLY event). Under paragraph (c) of this section, P and P1 compose a SRLY built-in loss subgroup because they have been affiliated for the 60 consecutive month period immediately preceding joining the M group. S is not a member of the subgroup because on becoming a member of the M group it had not been continuously affiliated with P and P1 for the 60 month period ending immediately before it became a member of the M group. Consequently, §1.1502–15 applies to S separately from the P and P1 subgroup.

(v) Assuming that the $5 net unrealized built-in loss of the P/P1 subgroup exceeds the threshold requirement under section 382(h)(3)(B), M's acquisition of P resulted in an ownership change of P and P1 within the meaning of section 382(g) that subjects P and P1 to a limitation under section 382(a) (the section 382 event). Because, with respect to P

and P1, the SRLY event and the change date of the section 382 event occur on the same date and because the loss subgroup and SRLY subgroup are coextensive, there is an overlap of the application of the SRLY rules and the application of section 382.

(vi) S was not a loss corporation because it did not have a net operating loss carryover, or a net unrealized built-in loss, and therefore, M's acquisition of P did not result in an ownership change of S within the meaning of section 382(g). S, therefore is not subject to the overlap rule of paragraph (g) of this section.

(vii) M's acquisition of T resulted in T becoming a member of the M group (the SRLY event). Assuming that T's $15 net unrealized built-in loss exceeds the threshold requirement under section 382(h)(3)(B), M's acquisition of T also resulted in an ownership change of T within the meaning of section 382(g) that subjects T to a limitation under section 382(a) (the section 382 event). Because, with respect to T, the SRLY event and the change date of the section 382 event occur on the same date, there is an overlap of the application of the SRLY rules and the application of section 382 within the meaning of paragraph (g) of this section.

(viii) K's acquisition of M results in the members of the M consolidated group, including T, P, P1, and S, becoming members of the K group (the SRLY event). Because T, P, and P1 were each included in the determination of a net unrealized built-in loss that was subject to the overlap rule described in paragraph (g)(1) of this section when they each became members of the M group, they are deemed under paragraph (c)(3) of this section to have been continuously affiliated with M for the 60 month period ending immediately before becoming a member of the M group, notwithstanding their actual affiliation history. As a result, M, T, P, and P1 compose a SRLY built-in loss subgroup under paragraph (c)(2) of this section. K's acquisition of M is not subject to paragraph (g) of this section because it does not result in a section 382 event.

(ix) S, however, is not a member of the subgroup under paragraph (c)(2) of this section. Because S was not included in the determination of a net unrealized built-in loss that was subject to the overlap rule described in paragraph (g)(1) of this section when it joined the M group, S is treated as becoming an affiliate of M on the date it joined the M group. Furthermore, under paragraph (c)(3) of this section, S is deemed to have begun its affiliation with P and P1 on the date it joined the M group. Consequently, §1.1502–15 applies to S separately to the extent its built-in loss is recognized within the recognition period.

Example 2. Post-overlap acquisition of assets. (i) Individual A owns all of the stock of P, the common parent of a consolidated group. B, an individual unrelated to Individual A, owns all of the stock of T. T has two depreciable assets. Asset 1 has an unrealized built-in loss of $25 (basis $75, value $50), and asset 2 has an unrealized built-in gain of $20 (basis $30, value $50). During Year 3, P buys all of the stock of T from Individual B. On January 1, Year 4, P contributes $80 cash and Individual A contributes asset 3, a depreciable asset, with a net unrealized built-in loss of $45 (basis $65, value $20), in exchange for T stock in a transaction that is described in section 351.

(ii) P's acquisition of T results in T becoming a member of the P group (the SRLY event) and also results in an ownership change of T, within the meaning of section 382(g), that gives rise to a limitation under section 382(a) (the section 382 event).

(iii) Because the SRLY event and the change date of the section 382 event occur on the same date, there is an overlap of the application of the SRLY rules and the application of section 382. Consequently, under paragraph (g) of this section, the limitation under paragraph (a) of this section does not apply to T's net unrealized built-in loss when it joined the P group.

(iv) Individual A's Year 4 contribution of a depreciable asset occurred after T was a member of the P group. Assuming that the amount of the net unrealized built-in loss exceeds the threshold requirement of section 382(h)(3)(B), the sale of asset 3 within the recognition period is subject to the SRLY limitation of paragraphs (a) and (b)(2)(ii) of this section.

Example 3. Overlap rule. (i) Individual A owns all of the stock of P, the common parent of a consolidated group. B, an individual unrelated to Individual A, owns all of the stock of T. T has two depreciable assets. Asset 1 has an unrealized loss of $55 (basis $75, value $20), and asset 2 has an unrealized gain of $30 (basis $30, value $60). On February 28 of Year 2, P purchases 55% of T from Individual B. On June 30, of Year 2, P purchases an additional 35% of T from Individual B.

(ii) The February 28 purchase of 55% of T is a section 382 event because it results in an ownership change of T that gives rise to a section 382(a) limitation. The June 30 purchase of 35% of T results in T becoming a member of the P group and is therefore a SRLY event.

(iii) Because the SRLY event occurred within six months of the change date of the section 382 event, there is an overlap of the application of the SRLY rules and the application of section 382, and paragraph (a) of this section does not apply. Therefore, the SRLY limitation does not apply to any of the $55 loss in asset 1 recognized by T after T joined the P group. See §1.1502–94 for rules relating to the application of section 382 with respect to T's $25 unrealized built-in loss.

Example 4. Overlap rule-Fluctuation in value. (i) The facts are the same as in *Example 3*, except that by June 30, of Year 2, asset 1 had declined in value by a further $10. Thus asset 1 had an unrealized loss of $65 (basis $75, value $10), and asset 2 had an unrealized gain of $30 (basis $30, value $60).

(ii) Because paragraph (a) of this section does not apply, the further decrease in asset 1's value is disregarded. Consequently, the results are the same as in *Example 3*.

(h) *Effective date*—(1) *In general.* This section generally applies to built-in losses recognized in taxable years for which the due date (without extensions) of the consolidated return is after June 25, 1999. However—

(i) In the event that paragraphs (f)(1) and (g)(1) of this section do not apply to a particular built-in loss in the current group, then solely for purposes of applying paragraph (a) of this section to determine a limitation with respect to that built-in loss and with respect to which the SRLY register (consolidated taxable income determined by reference to only the member's (or subgroup's) items of income, gain, deduction, or loss) began in a taxable year for which the due date of the return was on or before June 25, 1999, paragraph (c)(3) of this section shall not apply; and

(ii) For purposes of paragraph (g) of this section, only an ownership change to which section 382(a) as amended by the Tax Reform Act of 1986 applies shall constitute a section 382 event.

(2) *Prior periods.* For certain taxable years ending on or before June 25, 1999, see § 1.1502–15T in effect prior to June 25, 1999, as contained in 26 CFR part 1 revised April 1, 1999, as applicable.

[T.D. 8823, 64 FR 36101, July 2, 1999; 64 FR 41784, Aug. 2, 1999]

§ 1.1502–16 Mine exploration expenditures.

(a) *Section 617*—(1) *In general.* If the aggregate amount of the expenditures to which section 617(a) applies, paid or incurred with respect to mines or deposits located outside the United States (as defined in section 638 and the regulations thereunder), does not exceed:

(i) $400,000 minus

(ii) All amounts deducted or deferred during the taxable year and all preceding taxable years under section 617 or section 615 of the Internal Revenue Code of 1954 and section 23(ff) of the Internal Revenue Code of 1939 by corporations which are members of the group during the taxable year (and individuals or corporations which have transferred any mineral property to any such member within the meaning of section 617(g)(2)(B)) for taxable years ending after December 31, 1950 and prior to the taxable year, then the deduction under section 617 with respect to such foreign expenditures and paragraph (c) of § 1.1502–12 for each member shall be no greater than an allocable portion of such amount hereinafter referred to as the ''consolidated foreign exploration limitation.'' Such allocable portion shall be determined under subparagraph (2) of this paragraph. If the amount of such expenditures exceeds the consolidated foreign exploration limitation, no deduction shall be allowed with respect to such excess.

(2) *Allocable portion of limitation.* A member's allocable portion of the consolidated foreign exploration limitation for a consolidated return year shall be:

(i) The amount allocated by the common parent pursuant to an allocation plan adopted by the consolidated group, but in no event shall a member be allocated more than the amount it could have deducted had it filed a separate return. Such allocation plan must include a statement which also contains the total foreign exploration expenditures of each member which could have been deducted under section 617 if the member had filed a separate return. Such plan must be attached to a consolidated return filed on or before the due date of such return (including extensions of time), and may not be changed after such date, or

(ii) If no plan is filed in accordance with subdivision (i) of this subparagraph, then the portion of the consolidated foreign exploration limitation allocable to each member incurring such expenditures is an amount equal to such limitation multiplied by a fraction, the numerator of which is the amount of foreign exploration expenditures which could have been deducted under section 617 by such member had it filed a separate return and the denominator of which is the aggregate of

such amounts for all members of the group.

(b) *Section 615*—(1) *In general*. If the aggregate amount of the expenditures, to which section 615(a) applies, which are paid or incurred by the members of the group during any consolidated return year exceeds the lesser of:

(i) $100,000, or

(ii) $400,000 minus all such expenditures deducted (or deferred) by corporations which are members of the group during the taxable year (and individuals or corporations which have transferred any mineral property to any such member within the meaning of section 615(c)(2)(B)) for taxable years ending after December 31, 1950, and prior to the taxable year, then the deduction (or amount deferrable) under section 615 and paragraph (c) of § 1.1502–12 for each member shall be no greater than an allocable portion of such lesser amount, hereinafter referred to as the ''consolidated exploration limitation''. Such allocable portion shall be determined under subparagraph (2) of this paragraph.

(2) *Allocable portion of limitation*. A member's allocable portion of the consolidated exploration limitation for a consolidated return year shall be:

(i) The amount allocated by the common parent pursuant to an allocation plan adopted by the consolidated group, but in no event shall a member be allocated more than the amount it could have deducted (or deferred) had it filed a separate return. Such allocation plan must include a statement which also contains the total exploration expenditures of each member for the taxable year, and the expenditures of each member which could have been deducted (or deferred) under section 615 if the member had filed a separate return. Such plan must be attached to a consolidated return filed on or before the due date of such return (including extensions of time), and may not be changed after such date, or

(ii) If no plan is filed in accordance with subdivision (i) of this subparagraph, then the portion of the consolidated exploration limitation allocable to each member incurring such expenditures is an amount equal to such limitation multiplied by a fraction, the numerator of which is the amount which could have been deducted (or deferred) under section 615 by such member had it filed a separate return and the denominator of which is the aggregate of such amounts for all members of the group.

(c) *Examples*. The provisions of this section may be illustrated by the following examples:

Example (1). Corporation X and its wholly owned subsidiaries, corporations Y and Z, file a consolidated return for the calendar year 1971. None of the corporations have incurred exploration expenditures described in section 617 in previous years. During 1971, X incurred foreign exploration expenditures of $30,000, Y of $20,000, and Z of $40,000. The amount of foreign exploration expenditures deductible under section 617 for purposes of computing separate taxable income under § 1.1502–12 will be the amount actually expended by each corporation.

Example (2). Assume the same facts as in example (1) except that prior to 1971, X, Y, and Z had deducted (or deferred) under section 615 and 617 a total of $300,000 of exploration expenditures. During 1971, with respect to deposits located outside the United States X incurred exploration expenditures of $25,000, Y of $75,000, and Z of $125,000. The consolidated exploration limitation under paragraph (a) of this section with respect to the foreign deposits (there is no limitation with respect to the domestic expenditures) is $100,000. X may allocate the $100,000 in any manner among the three members, except that X may not be allocated more than $25,000 nor Y more than $75,000, the amount actually expended by X and Y and which they could have deducted had they each filed a separate return. If the allocation is not made in accordance with paragraph (a)(2)(i) of this section, the $100,000 limitation will be allocated under paragraph (a)(2)(ii) of this section as follows:

Corporation	Expenditure	Fraction	Limitation	Allocable portion
X	$25,000	$\frac{25,000}{200,000}$	×$100,000=	$12,500
Y	$75,000	$\frac{75,000}{200,000}$	×$100,000=	$37,500

Corporation	Expenditure	Fraction	Limitation	Allocable portion
Z	$125,000	$\frac{100,000}{200,000}$	×$100,000=	$50,000

The denominator of $200,000 was calculated as follows:

X=$25,000

Y=$75,000

Z=$100,000 (maximum amount allowed if filed separately)

Total $200,000.

Example (3). Assume the same facts as in example (2) and that on January 1, 1971, X acquired all of the stock of corporation T which prior to its taxable year beginning January 1, 1971, had previously deducted (or deferred) $310,000 of exploration expenditures. Assume further that in 1971 X incurred $25,000 of foreign exploration expenditures, Y $50,000, T $50,000, and Z none. A consolidated return is filed for 1971. None of the expenditures may be deducted under section 617 since the consolidated exploration limitation is zero. The limitation is zero since the aggregate amount of previously deducted (or deferred) exploration expenditures by the members of the group exceeds $400,000. (The total of such expenditures is $410,000, of which $310,000 is attributable to T and, assuming the allocation of the limitation in example (2) is made under paragraph (a)(2)(ii) of this section, $12,500 is attributable to X, $37,500 to Y, and $50,000 to Z.

Example (4). Assume the same facts as in example (3) except that on December 31, 1971, X sold all of the stock in Z to an unrelated party. The consolidated exploration limitation for 1972 will be $40,000, computed by subtracting from $400,000, the aggregate amount of previously deducted (or deferred) exploration expenditures incurred by the members of the group prior to 1972. (The total of such expenditures is $360,000, of which $12,500 is attributable to X, $37,500 to Y and $310,000 to T.) Amounts previously deducted (or deferred) by Z are not taken into account since it was not a member of the group at any time during 1972. Amounts previously deducted (or deferred) by Z shall be taken into account by it for subsequent separate return years.

[T.D. 7192, 37 FR 12949, June 30, 1972]

§ 1.1502–17 Methods of accounting.

(a) *General rule.* The method of accounting to be used by each member of the group shall be determined in accordance with the provisions of section 446 as if such member filed a separate return. For treatment of depreciable property after a transfer within the group, see paragraph (g) of § 1.1502–12.

(b) *Adjustments required if method of accounting changes*—(1) *General rule.* If a member of a group changes its method of accounting for a consolidated return year, the terms and conditions prescribed by the Commissioner under section 446(e), including section 481(a) where applicable, shall apply to the member. If the requirements of section 481(b) are met because applicable adjustments under section 481(a) are substantial, the increase in tax for any prior year shall be computed upon the basis of a consolidated return or a separate return, whichever was filed for such prior year.

(2) *Changes in method of accounting for intercompany transactions.* If a member changes its method of accounting for intercompany transactions for a consolidated return year, the change in method generally will be effected on a cut-off basis.

(c) *Anti-avoidance rules*—(1) *General rule.* If one member (B) directly or indirectly acquires an activity of another member (S), or undertakes S's activity, with the principal purpose to avail the group of an accounting method that would be unavailable (or would be unavailable without securing consent from the Commissioner) if S and B were treated as divisions of a single corporation, B must use the accounting method for the acquired or undertaken activity determined under paragraph (c)(2) of this section or must secure consent from the Commissioner under applicable administrative procedures to use a different method.

(2) *Treatment as divisions of a single corporation.* B must use the method of accounting that would be required if B acquired the activity from S in a transaction to which section 381 applied. Thus, the principles of section 381 (c)(4) and (c)(5) apply to resolve any conflicts between the accounting methods of S and B, and the acquired or undertaken

activity is treated as having the accounting method used by S. Appropriate adjustments are made to treat all acquisitions or undertakings that are part of the same plan or arrangement as a single acquisition or undertaking.

(d) *Examples.* The provisions of this section are illustrated by the following examples:

Example 1. Separate return treatment generally. X and its wholly-owned subsidiary Y filed separate returns for their calendar years ending December 31, 1965. During calendar year 1965, X employed an accrual method of accounting, established a reserve for bad debts, and elected under section 171 to amortize bond premiums with respect to its fully taxable bonds. During calendar year 1965, Y employed the cash receipts and disbursements method, used the specific charge-off method with respect to its bad debts, and did not elect to amortize bond premiums under section 171 with respect to its bonds. X and Y filed a consolidated return for 1966. For 1966 X and Y must continue to compute income under their respective methods of accounting (unless a change in method under section 446 is made).

Example 2. Adopting methods. Corporation P is a member of a consolidated group. P provides consulting services to customers under various agreements. For one type of customer, P's agreements require payment only when the contract is completed (payment-on-completion contracts). P uses an overall accrual method of accounting. Accordingly, P takes its income from consulting contracts into account when earned, received, or due, whichever is earlier. With the principal purpose to avoid seeking the consent of the Commissioner to change its method of accounting for the payment-on-completion contracts to the cash method, P forms corporation S, and S begins to render services to those customers subject to the payment-on-completion contracts. P continues to render services to those customers not subject to these contracts.

(b) Under paragraph (c) of this section, S must account for the consulting income under the payment-on-completion contracts on an accrual method rather than adopting the cash method contemplated by P.

Example 3. Changing inventory sub-method. (a) Corporation P is a member of a consolidated group. P operates a manufacturing business that uses dollar-value LIFO, and has built up a substantial LIFO reserve. P has historically manufactured all its inventory and has used one natural business unit pool. P begins purchasing goods identical to its own finished goods from a foreign supplier, and is concerned that it must establish a separate resale pool under § 1.472–8(c). P anticipates that it will begin to purchase, rather than manufacture, a substantial portion of its inventory, resulting in a recapture of most of its LIFO reserve because of decrements in its manufacturing pool. With the principal purpose to avoid the decrements, P forms corporation S in Year 1. S operates as a distributor to nonmembers, and P sells all of its existing inventories to S. S adopts LIFO, and elects dollar-value LIFO with one resale pool. Thereafter, P continues to manufacture and purchase inventory, and to sell it to S for resale to nonmembers. P's intercompany gain from sales to S is taken into account under § 1.1502–13. S maintains its Year 1 base dollar value of inventory so that P will not be required to take its intercompany items (which include the effects of the LIFO reserve recapture) into account.

(b) Under paragraph (c) of this section, S must maintain two pools (manufacturing and resale) to the same extent that P would be required to maintain those pools under § 1.472–8 if it had not formed S.

(e) *Effective dates.* Paragraph (b) of this section applies to changes in method of accounting effective for years beginning on or after July 12, 1995. For changes in method of accounting effective for years beginning before that date, see § 1.1502–17 (as contained in the 26 CFR part 1 edition revised as of April 1, 1995). Paragraphs (c) and (d) apply with respect to acquisitions occurring or activities undertaken in years beginning on or after July 12, 1995.

[T.D. 6894, 31 FR 11794, Sept. 8, 1966, as amended by T.D. 8597, 60 FR 36708, July 18, 1995]

§ 1.1502–18 Inventory adjustment.

(a) *Definition of intercompany profit amount.* For purposes of this section, the term ''intercompany profit amount'' for a taxable year means an amount equal to the profits of a corporation (other than those profits which such corporation has elected not to defer pursuant to § 1.1502– 13(c)(3) or which have been taken into account pursuant to § 1.1502–13(f)(1)(viii)) arising in transactions with other members of the group with respect to goods which are, at the close of such corporation's taxable year, included in the inventories of any member of the group. See § 1.1502–13(c)(2) with respect to the determination of profits. See the last sentence of § 1.1502–13(f)(1)(i) for rules for

determining which goods are considered to be disposed of outside the group and therefore not included in inventories of members.

(b) *Addition of initial inventory amount to taxable income.* If a corporation:

(1) Is a member of a group filing a consolidated return for the taxable year,

(2) Was a member of such group for its immediately preceding taxable year, and

(3) Filed a separate return for such preceding year,

then the intercompany profit amount of such corporation for such separate return year (hereinafter referred to as the ''initial inventory amount'') shall be added to the income of such corporation for the consolidated return year (or years) in which the goods to which the initial inventory amount is attributable are disposed of outside the group or such corporation becomes a nonmember. Such amount shall be treated as gain from the sale or exchange of property which is neither a capital asset nor property described in section 1231.

(c) *Recovery of initial inventory amount*—(1) *Unrecovered inventory amount.* The term ''unrecovered inventory amount'' for any consolidated return year means the lesser of:

(i) The intercompany profit amount for such year, or

(ii) The initial inventory amount.

However, if a corporation ceases to be a member of the group during a consolidated return year, its unrecovered inventory amount for such year shall be considered to be zero.

(2) *Recovery during consolidated return years.* (i) To the extent that the unrecovered inventory amount of a corporation for a consolidated return year is less than such amount for its immediately preceding year, such decrease shall be treated for such year by such corporation as a loss from the sale or exchange of property which is neither a capital asset nor property described in section 1231.

(ii) To the extent that the unrecovered inventory amount for a consolidated return year exceeds such amount for the preceding year, such increase shall be treated as gain from the sale or exchange of property which is neither a capital asset nor property described in section 1231.

(3) *Recovery during first separate return year.* For the first separate return year of a member following a consolidated return year, the unrecovered inventory amount for such consolidated return year (minus any part of the initial inventory amount which has not been added to income pursuant to paragraph (b) of this section) shall be treated as a loss from the sale or exchange of property which is neither a capital asset nor property described in section 1231.

(4) *Acquisition of group.* For purposes of this section, a member of a group shall not become a nonmember or be considered as filing a separate return solely because of a termination of the group (hereinafter referred to as the ''terminating group'') resulting from:

(i) The acquisition by a nonmember corporation of *(a)* the assets of the common parent in a reorganization described in subparagraph (A), (C), or (D) (but only if the requirements of subparagraphs (A) and (B) of section 354(b)(1) are met) of section 368 (a)(1), or (b) stock of the common parent, or

(ii) The acquisition (in a transaction to which §1.1502–75(d)(3) applies) by a member of *(a)* the assets of a nonmember corporation in a reorganization referred to in subdivision (i) of this subparagraph, or *(b)* stock of a nonmember corporation,

if all the members of the terminating group (other than such common parent if its assets are acquired) immediately before the acquisition are members immediately after the acquisition of another group (hereinafter referred to as the ''succeeding group'') which files a consolidated return for the first taxable year ending after the date of acquisition. The members of the succeeding group shall succeed to any initial inventory amount and to any unrecovered inventory amount of members of the terminating group. This subparagraph shall not apply with respect to acquisitions occurring before August 25, 1971.

(d) *Examples.* The provisions of paragraphs (a), (b), and (c) of this section may be illustrated by the following examples:

Example (1). Corporations P, S, and T report income on the basis of a calendar year.

Such corporations file separate returns for 1965. P manufactures widgets which it sells to both S and T, who act as distributors. The inventories of S and T at the close of 1965 are comprised of widgets which they purchased from P and with respect to which P derived profits of $5,000 and $8,000, respectively. P, S, and T file a consolidated return for 1966. During 1966, P sells widgets to S and T with respect to which it derives profits of $7,000 and $10,000, respectively. The inventories of S and T as of December 31, 1966, are comprised of widgets on which P derived net profits of $4,000 and $8,000, respectively. P's initial inventory amount is $13,000, P's intercompany profit amount for 1965 (such $13,000 amount is the profits of P with respect to goods sold to S and T and included in their inventories at the close of 1965). Assuming that S and T identify their goods on a first-in, first-out basis, the entire opening inventory amount of $13,000 is added to P's income for 1966 as gain from the sale or exchange of property which is neither a capital asset nor properly described in section 1231, since the goods to which the initial inventory amount is attributable were disposed of in 1966 outside the group. However, since P's unrecovered inventory amount for 1966, $12,000 (the intercompany profit amount for the year, which is less than the initial inventory amount), is less than the unrecovered inventory amount for 1965, $13,000, this decrease of $1,000 is treated by P for 1966 as a loss from the sale or exchange of property which is neither a capital asset nor property described in section 1231.

Example (2). Assume the same facts as in example (1) and that at the close of 1967, a consolidated return year, the inventories of S and T are comprised of widgets on which P derived profits of $5,000 and $3,000, respectively. Since P's unrecovered inventory amount for 1967, $8,000, is less than $12,000, the unrecovered inventory amount for 1966, this decrease of $4,000 is treated by P for 1967 as a loss from the sale or exchange of property which is neither a capital asset nor property described in section 1231.

Example (3). Assume the same facts as in examples (1) and (2) and that in 1968, a consolidated return year, P's intercompany profit amount is $11,000. P will report $3,000 (the excess of $11,000, P's unrecovered inventory amount for 1968, over $8,000, P's unrecovered inventory amount for 1967) for 1968 as a gain from the sale or exchange of property which is neither a capital asset nor property described in section 1231.

Example (4). Assume the same facts as in examples (1), (2), and (3) and that in 1969 P, S, and T file separate returns. P will report $11,000 (its unrecovered inventory amount for 1968, $11,000, minus the portion of the initial inventory amount which has not been added to income during 1966, 1967, and 1968, zero) as a loss from the sale or exchange of property which is neither a capital asset nor property described in section 1231.

Example (5). Corporations P and S file a consolidated return for the first time for the calendar year 1966. P manufactures machines and sells them to S, which sells them to users throughout the country. At the close of 1965, S has on hand 20 machines which it purchased from P and with respect to which P derived profits of $3,500. During 1966, P sells 6 machines to S on which it derives profits of $1,300, and S sells 5 machines which it had on hand at the beginning of the year (S specifically identifies the machines which it sells) and on which P had derived profits of $900. P's initial inventory amount is $3,500, of which $900 is added to P's income in 1966 as gain from the sale or exchange of property which is neither a capital asset nor property described in section 1231, since such $900 amount is attributable to goods disposed of in 1966 outside the group, which goods were included in S's inventory at the close of 1965. If P and S continue to file consolidated returns, the remaining $2,600 of the initial inventory amount will be added to P's income as the machines on which such profits were derived are disposed of outside the group.

Example (6). Assume that in example (5) S had elected to inventory its goods under section 472 (relating to last-in, first-out inventories). None of P's initial inventory amount of $3,500 would be added to P's income in 1966, since none of the goods to which such amount is attributable would be considered to be disposed of during such year under the last-in, first-out method of identifying inventories.

(e) *Section 381 transfer.* If a member of the group is a transferor or distributor of assets to another member of the group within the meaning of section 381(a), then the acquiring corporation shall be treated as succeeding to the initial inventory amount of the transferor or distributor corporation to the extent that as of the date of distribution or transfer such amount has not yet been added to income. Such amount shall then be added to the acquiring corporation's income under the provisions of paragraph (b) of this section. For purposes of applying paragraph (c) of this section:

(1) The initial inventory amount of the transferor or distributor corporation shall be added to such amount of the acquiring corporation as of the close of the acquiring corporation's taxable year in which the date of distribution or transfer occurs, and

(2) The unrecovered inventory amount of the transferor or distributor

corporation for its taxable year preceding the taxable year of the group in which the date of distribution or transfer occurs shall be added to such amount of the acquiring corporation.

(f) *Transitional rules for years before 1966*—(1) *In general*. If:

(i) A group filed a consolidated return for the taxable year immediately preceding the first taxable year to which this section applies,

(ii) Any member of such group made an opening adjustment to its inventory pursuant to paragraph (b) of §1.1502–39A (as contained in the 26 CFR edition revised as of April 1, 1996), and

(iii) Paragraph (c) of §1.1502–39A (as contained in the 26 CFR edition revised as of April 1, 1996), has not been applicable for any taxable year subsequent to the taxable year for which such adjustment was made,

then subparagraphs (2) and (3) of this paragraph shall apply.

(2) *Closing adjustment to inventory*. (i) For the first consolidated return year to which this section applies, the increase in inventory prescribed in paragraph (c) of §1.1502–39A (as contained in the 26 CFR edition revised as of April 1, 1996), shall be made as if such year were a separate return year.

(ii) For the first separate return year of a member to which this section applies, the adjustment to inventory (whether an increase or a decrease) prescribed in paragraph (c) of §1.1502–39A (as contained in the 26 CFR edition revised as of April 1, 1996), minus any adjustment already made pursuant to subdivision (i) of this subparagraph, shall be made to the inventory of such member.

(3) *Addition and recovery of initial inventory amount*. Each selling member shall treat as an initial inventory amount its share of the net amount by which the inventories of all members are increased pursuant to subparagraph (2)(i) of this paragraph for the first taxable year to which this section applies. A member's share shall be such net amount multiplied by a fraction, the numerator of which is its initial inventory amount (computed under paragraph (b) as if such taxable year were its first consolidated return year), and the denominator of which is the sum of such initial inventory amounts of all members. Such initial inventory amount shall be added to the income of such selling member and shall be recovered at the time and in the manner prescribed in paragraphs (b) and (c) of this section.

(4) *Example*. The provisions of this paragraph may be illustrated by the following example:

Example. (i) Corporations P, S, and T file consolidated returns for calendar 1966, having filed consolidated returns continuously since 1962. P is a wholesale distributor of groceries selling to chains of supermarkets, including those owned by S and T. The opening inventories of S and T for 1962 were reduced by $40,000 and $80,000, respectively, pursuant to paragraph (b) of §1.1502–39A (as contained in the 26 CFR edition revised as of April 1, 1996). At the close of 1965, S and T have on hand in their inventories goods on which P derived profits of $80,000 and $90,000, respectively. The inventories of S and T at the close of 1966 include goods which they purchased from P during the year on which P derived profits of $85,000 and $105,000, respectively.

(ii) The opening inventories of S and T for 1966, the first year to which this section applies, are increased by $40,000 and $80,000, respectively, pursuant to the provisions of subparagraph (2)(i) of this paragraph. P will take into account (as provided in paragraphs (b) and (c) of this section) an initial inventory amount of $120,000 as of the beginning of 1966, the net amount by which the inventories of S and T were increased in such year. Since the increases in the inventories of S and T are the maximum allowable under paragraph (c) of §1.1502–39A (as contained in the 26 CFR edition revised as of April 1, 1996) (i.e., the amount by which such inventories were originally decreased), no further adjustments will be made pursuant to subparagraph (2)(ii) of this paragraph to such inventories in the event that separate returns are subsequently filed.

(5) *Election not to eliminate*. If a group filed a consolidated return for the taxable year immediately preceding the first taxable year to which this section applies, and for such preceding year the members of the group did not eliminate gain or loss on intercompany inventory transactions pursuant to the adoption under §1.1502–31A(b)(1) (as contained in the 26 CFR edition revised as of April 1, 1996) of a consistent accounting practice taking into account such gain or loss, then for purposes of this section each member shall be treated as if it

had filed a separate return for such immediately preceding year.

(g) *Transitional rules for years beginning on or after July 12, 1995.* Paragraphs (a) through (f) of this section do not apply for taxable years beginning on or after July 12, 1995. Any remaining unrecovered inventory amount of a member under paragraph (c) of this section is recovered in the first taxable year beginning on or after July 12, 1995, under the principles of paragraph (c)(3) of this section by treating the first taxable year as the first separate return year of the member. The unrecovered inventory amount can be recovered only to the extent it was previously included in taxable income. The principles of this section apply, with appropriate adjustments, to comparable amounts under paragraph (f) of this section.

[T.D. 6894, 31 FR 11794, Sept. 8, 1966, as amended by T.D. 7246, 38 FR 762, Jan. 4, 1973; T.D. 8597, 60 FR 36709, July 18, 1995: T.D. 8677, 61 FR 33323, June 27, 1996]

§ 1.1502–19 Excess loss accounts.

(a) *In general*—(1) *Purpose.* This section provides rules for a member (P) to include in income its excess loss account in the stock of another member (S). The purpose of the excess loss account is to recapture in consolidated taxable income P's negative adjustments with respect to S's stock (e.g., under § 1.1502–32 from S's deductions, losses, and distributions), to the extent the negative adjustments exceed P's basis in the stock.

(2) *Excess loss accounts*—(i) *In general.* P's basis in S's stock is adjusted under the consolidated return regulations and other rules of law. Negative adjustments may exceed P's basis in S's stock. The resulting negative amount is P's excess loss account in S's stock. For example:

(A) Once P's negative adjustments under § 1.1502–32 exceed its basis in S's stock, the excess is P's excess loss account in the S stock. If P has further adjustments, they first increase or decrease the excess loss account.

(B) If P forms S by transferring property subject to liabilities in excess of basis, § 1.1502–80(d) provides for the nonapplicability of section 357(c) and the resulting negative basis under section 358 is P's excess loss account in the S stock.

(ii) *Treatment as negative basis.* P's excess loss account is treated for all Federal income tax purposes as basis that is a negative amount, and a reference to P's basis in S's stock includes a reference to P's excess loss account.

(3) *Application of other rules of law.* The rules of this section are in addition to other rules of law. See, e.g., §§ 1.1502–32 (investment adjustment rules establishing and adjusting excess loss accounts) and 1.1502–80(d) (nonapplicability of section 357(c)). The provisions of this section and other rules of law must not be applied to recapture the same amount more than once. For purposes of this section, the definitions in § 1.1502–32 apply.

(b) *Excess loss account taken into account as income or gain*—(1) *General rule.* If P is treated under this section as disposing of a share of S's stock, P takes into account its excess loss account in the share as income or gain from the disposition. Except as provided in paragraph (b)(4) of this section, the disposition is treated as a sale or exchange for purposes of determining the character of the income or gain.

(2) *Nonrecognition or deferral*—(i) *In general.* P's income or gain under paragraph (b)(1) of this section is subject to any nonrecognition or deferral rules applicable to the disposition. For example, if S liquidates and the exchange of P's stock in S is subject to section 332, or P transfers all of its assets (including S's stock) to S in a reorganization to which section 361(a) applies, P's income or gain from the excess loss account is not recognized under these rules.

(ii) *Nonrecognition or deferral inapplicable.* If P's income or gain under paragraph (b)(1) of this section is from a disposition described in paragraph (c)(1) (ii) or (iii) of this section (relating to deconsolidations and worthlessness), the income or gain is taken into account notwithstanding any nonrecognition or deferral rules (even if the disposition is also described in paragraph (c)(1)(i) of this section). For example, if P transfers S's stock to a nonmember in a transaction to which section 351 applies, P's income or gain

from the excess loss account is taken into account.

(3) *Tiering up in chains.* If the stock of more than one subsidiary is disposed of in the same transaction, the income or gain under this section is taken into account in the order of the tiers, from the lowest to the highest.

(4) *Insolvency*—(i) *In general.* Gain under this section is treated as ordinary income to the extent of the amount by which S is insolvent (within the meaning of section 108(d)(3)) immediately before the disposition. For this purpose S's liabilities include any amount to which preferred stock would be entitled if S were liquidated immediately before the disposition, and any former liabilities that were discharged to the extent the discharge was treated as tax-exempt income under §1.1502–32(b)(3)(ii)(C) (special rule for discharges).

(ii) *Reduction for amount of distributions.* The amount treated as ordinary income under this paragraph (b)(4) is reduced to the extent it exceeds the amount of P's excess loss account redetermined without taking into account S's distributions to P to which §1.1502–32(b)(2)(iv) applies.

(c) *Disposition of stock.* For purposes of this section:

(1) *In general.* P is treated as disposing of a share of S's stock:

(i) *Transfer, cancellation, etc.* At the time—

(A) P transfers or otherwise ceases to own the share for Federal income tax purposes, even if no gain or loss is taken into account; or

(B) P takes into account gain or loss (in whole or in part) with respect to the share.

(ii) *Deconsolidation.* At the time—

(A) P becomes a nonmember, or a nonmember determines its basis in the share (or any other asset) by reference to P's basis in the share, directly or indirectly, in whole or in part (e.g., under section 362); or

(B) S becomes a nonmember, or P's basis in the share is reflected, directly or indirectly, in whole or in part, in the basis of any asset other than member stock (e.g., under section 1071).

(iii) *Worthlessness.* At the time—

(A) Substantially all of S's assets are treated as disposed of, abandoned, or destroyed for Federal income tax purposes (e.g., under section 165(a) or §1.1502–80(c), or, if S's asset is stock of a lower-tier member, the stock is treated as disposed of under this paragraph (c)). An asset of S is not considered to be disposed of or abandoned to the extent the disposition is in complete liquidation of S or is in exchange for consideration (other than relief from indebtedness);

(B) An indebtedness of S is discharged, if any part of the amount discharged is not included in gross income and is not treated as tax-exempt income under §1.1502–32(b)(3)(ii)(C); or

(C) A member takes into account a deduction or loss for the uncollectibility of an indebtedness of S, and the deduction or loss is not matched in the same tax year by S's taking into account a corresponding amount of income or gain from the indebtedness in determining consolidated taxable income.

(2) *Becoming a nonmember.* A member is treated as becoming a nonmember if it has a separate return year (including another group's consolidated return year). For example, S may become a nonmember if it issues additional stock to nonmembers, but S does not become a nonmember as a result of its complete liquidation. A disposition under paragraph (c)(1)(ii) of this section must be taken into account in the consolidated return of the group. For example, if a group ceases under §1.1502–75(c) to file a consolidated return as of the close of its consolidated return year, the disposition under paragraph (c)(1)(ii) of this section is treated as occurring immediately before the close of the year. If S becomes a nonmember because P sells S's stock to a nonmember, P's sale is a disposition under both paragraphs (c)(1) (i) and (ii) of this section. If a group terminates under §1.1502–75(d) because the common parent is the only remaining member, the common parent is not treated as having a deconsolidation event under paragraph (c)(1)(ii) of this section.

(3) *Exception for acquisition of group*—(i) *Application.* This paragraph (c)(3) applies only if a consolidated group (the terminating group) ceases to exist as a result of—

(A) The acquisition by a member of another consolidated group of either the assets of the common parent of the terminating group in a reorganization described in section 381(a)(2), or the stock of the common parent of the terminating group; or

(B) The application of the principles of § 1.1502–75(d)(2) or (d)(3).

(ii) *General rule.* Paragraph (c)(1)(ii) of this section does not apply solely by reason of the termination of a group in a transaction to which this paragraph (c)(3) applies, if there is a surviving group that is, immediately thereafter, a consolidated group. Instead, the surviving group is treated as the terminating group for purposes of applying this section to the terminating group. This treatment does not apply, however, to members of the terminating group that are not members of the surviving group immediately after the terminating group ceases to exist (e.g., under section 1504(a)(3) relating to reconsolidation, or section 1504(c) relating to includible insurance companies).

(d) *Special allocation of basis adjustments or determinations.* If a member has an excess loss account in shares of a class of S's stock at the time of a basis adjustment or determination under the Internal Revenue Code with respect to other shares of the same class of S's stock owned by the member, the adjustment or determination is allocated first to equalize and eliminate that member's excess loss account. For example, if P owns 50 shares of S's only class of stock with a $100 basis and 50 shares with a $100 excess loss account, and P contributes $200 to S without receiving additional shares, the contribution first eliminates P's excess loss account, then increases P's basis in each share by $1. (If P transfers the $200 in exchange for an additional 100 shares of S's stock in a transaction to which section 351 applies, P's excess loss account is first eliminated, and P's basis in the additional shares is $100.) See § 1.1502–32(c) for similar allocations of investment adjustments to prevent or eliminate excess loss accounts.

(e) *Anti-avoidance rule.* If any person acts with a principal purpose contrary to the purposes of this section, to avoid the effect of the rules of this section or apply the rules of this section to avoid the effect of any other provision of the consolidated return regulations, adjustments must be made as necessary to carry out the purposes of this section.

(f) *Predecessors and successors.* For purposes of this section, any reference to a corporation (or to a share of the corporation's stock) includes a reference to a successor or predecessor (or to a share of stock of a predecessor or successor), as the context may require.

(g) *Examples.* For purposes of the examples in this section, unless otherwise stated, P owns all 100 shares of the only class of S's stock and S owns all 100 shares of the only class of T's stock, the stock is owned for the entire year, T owns no stock of lower-tier members, the tax year of all persons is the calendar year, all persons use the accrual method of accounting, the facts set forth the only corporate activity, all transactions are between unrelated persons, and tax liabilities are disregarded. The principles of this section are illustrated by the following examples.

Example 1. Taxable disposition of stock. (a) *Facts.* P has a $150 basis in S's stock, and S has a $100 basis in T's stock. For Year 1, P has $500 of ordinary income, S has no income or loss, and T has a $200 ordinary loss. S sells T's stock to a nonmember for $60 at the close of Year 1.

(b) *Analysis.* Under paragraph (c) of this section, the sale is a disposition of T's stock at the close of Year 1 (the day of the sale). Under § 1.1502–32(b), T's loss results in S having a $100 excess loss account in T's stock immediately before the sale. Under paragraph (b)(1) of this section, S takes into account the $100 excess loss account as an additional $100 of gain from the sale. Consequently, S takes into account a $160 gain from the sale in determining the group's consolidated taxable income. Under § 1.1502–32(b), T's $200 loss and S's $160 gain result in a net $40 decrease in P's basis in S's stock as of the close of Year 1, from $150 to $110.

(c) *Intercompany sale followed by sale to nonmember.* The facts are the same as in paragraph (a) of this *Example 1*, except that S sells T's stock to P for $60 at the close of Year 1, and P sells T's stock to a nonmember at a gain at the beginning of Year 5. Under paragraph (c) of this section, S's sale is treated as a disposition of T's stock at the close of Year 1 (the day of the sale). Under § 1.1502–13 and paragraph (b)(2) of this section, S's $160 gain from the sale is deferred and taken into account in Year 5 as a result of P's sale of the T stock. Under § 1.1502–32(b),

the absorption of T's $200 loss in Year 1 results in P having a $50 excess loss account in S's stock at the close of Year 1. In Year 5, S's $160 gain taken into account eliminates P's excess loss account in S's stock and increases P's basis in the stock to $110.

(d) *Intercompany distribution followed by sale to a nonmember*. The facts are the same as in paragraph (a) of this *Example 1*, except that the value of the T stock is $60 and S declares and distributes a dividend of all of the T stock to P at the close of Year 1, and P sells the T stock to a nonmember at a gain at the beginning of Year 5. Under paragraph (c) of this section, S's distribution is treated as a disposition of T's stock at the close of Year 1 (the day of the distribution). S's $100 excess loss account in T's stock is treated as additional gain under section 311(b) from the distribution. Under section 301(d), P's basis in the T stock is $60. Under § 1.1502–13, and paragraph (b)(2) of this section, S's $160 gain from the distribution is deferred and taken into account in Year 5 as a result of P's sale of the T stock. Under § 1.1502–32(b), T's $200 loss and S's $60 distribution result in P having a $110 excess loss account in S's stock at the close of Year 1. In Year 5, S's $160 gain taken into account eliminates P's excess loss account in S's stock and increases P's basis in the stock to $50.

Example 2. Basis determinations under the Internal Revenue Code in intercompany reorganizations. (a) *Facts*. P owns all of the stock of S and T. P has a $150 basis in S's stock and a $100 excess loss account in T's stock. P transfers T's stock to S without receiving additional S stock, in a transaction to which section 351 applies.

(b) *Analysis*. Under paragraph (c) of this section, P's transfer is treated as a disposition of T's stock. Under section 351 and paragraph (b)(2) of this section, P does not recognize gain from the disposition. Under section 358 and paragraph (a)(2)(ii) of this section, P's $100 excess loss account in T's stock decreases P's $150 basis in S's stock to $50. In addition, S takes a $100 excess loss account in T's stock under section 362. (If P had received additional S stock, paragraph (d) of this section would not apply to shift basis from P's original S stock because the basis of the original stock is not adjusted or determined as a result of the contribution; but paragraph (d) would apply to shift basis if P had transferred S's stock to T in exchange for additional T stock, because the basis of the additional T stock would be determined when P has an excess loss account in its original T stock.)

(c) *Intercompany merger*. The facts are the same as in paragraph (a) of this *Example 2*, except that T merges into S in a reorganization described in section 368(a)(1)(A) (and in section 368(a)(1)(D)), and P receives no additional S stock in the reorganization. Under section 354 and paragraph (b)(2) of this section, P does not recognize gain. Under section 358 and paragraph (a)(2)(ii) of this section, P's $100 excess loss account in T's stock decreases P's $150 basis in the S stock to $50. (Similarly, if S merges into T and P does not receive additional T stock, P's $150 basis in S's stock eliminates P's excess loss account in T's stock, and increases P's basis in T's stock to $50.)

(d) *Liquidation of only subsidiary*. Assume instead that P and S are the only members of the P group, P has a $100 excess loss account in S's stock, and S liquidates in a transaction to which section 332 applies. Under paragraph (c)(2) of this section, the liquidation is not a deconsolidation event under paragraph (c)(1)(ii) of this section merely because P is the only remaining member. Under section 332 and paragraph (b)(2) of this section, P does not recognize gain. Under section 334(b), P succeeds to S's basis in the assets it receives from S in the liquidation. (P would also not recognize gain if P transferred all of its assets (including S's stock) to S in a reorganization to which section 361(a) applied, because S would be a successor to P under paragraph (f) of this section.)

Example 3. Section 355 distribution of stock with an excess loss account. (a) *Facts*. P has a $30 excess loss account in S's stock, and S has a $90 excess loss account in T's stock. S distributes the T stock to P in a transaction to which section 355 applies, and neither P nor S recognizes any gain or loss. At the time of the distribution, the T stock represents 33% of the value of the S stock. Following the distribution, P's basis in the S stock is allocated under § 1.358–2 in proportion to the fair market values of the S stock and the T stock.

(b) *Analysis*. Under paragraph (c) of this section, S's distribution of the T stock is treated as a disposition. Under section 355(c) and paragraph (b)(2) of this section, S does not recognize any gain from the distribution. Under section 358, S's excess loss account in the T stock is eliminated, and P's $30 excess loss account in the S stock is treated as basis allocated between the S stock and the T stock based on their relative values. Consequently, P has a $20 excess loss account in the S stock and a $10 excess loss account in the T stock. (If P had a $30 basis rather than a $30 excess loss account in the S stock, S would not recognize gain, its excess loss account in the T stock would be eliminated, and P's basis in the stock of S and T would be $20 and $10, respectively.)

(c) *Section 355 distribution to nonmember*. The facts are the same as in paragraph (a) of this *Example 3*, except that P also distributes the T stock to its shareholders in a transaction to which section 355 applies. Under paragraph (c) of this section, P's distribution is treated as a disposition of T's stock. Under paragraph (b)(2) of this section, because P's

disposition is described in paragraph (c)(1)(ii) of this section, P's $10 excess loss account in the T stock must be taken into account at the time of the distribution, notwithstanding the nonrecognition rules of section 355(c).

Example 4. Deconsolidation of a member. (a) *Facts.* P has a $50 excess loss account in S's stock, and S has a $100 excess loss account in T's stock. T issues additional stock to a nonmember and, as a consequence, T becomes a nonmember.

(b) *Analysis.* Under paragraph (c)(2) of this section, S is treated as disposing of each of its shares of T's stock immediately before T becomes a nonmember. Under paragraph (b)(1) of this section, S takes into account its $100 excess loss account as gain from the sale or exchange of T's stock. Under §1.1502–32(b) of this section, S's $100 gain eliminates P's excess loss account in S's stock and increases P's basis in S's stock to $50.

(c) *Deconsolidation of a higher-tier member.* The facts are the same as in paragraph (a) of this *Example 4,* except that S (rather than T) issues the stock and, as a consequence, both S and T become nonmembers. Under paragraph (c)(2) of this section, P is treated as disposing of S's stock and S is treated as disposing of T's stock immediately before S and T become nonmembers. Under §1.1502–32(b) and paragraph (b)(3) of this section, because S and T become nonmembers in the same transaction and T is the lower-tier member, S is first treated under paragraph (b)(1) of this section as taking into account its $100 excess loss account as gain from the sale or exchange of T's stock. Under §1.1502–32(b), S's $100 gain eliminates P's excess loss account in S's stock and increases P's basis in S's stock to $50 immediately before S becomes a nonmember. Thus, only S's $100 gain is taken into account in the determination of the group's consolidated taxable income.

(d) *Intercompany gain and deconsolidation.* The facts are the same as in paragraph (c) of this *Example 4,* except that T has $30 of gain that is deferred under §1.1502–13 and taken into account in determining consolidated taxable income immediately before T becomes a nonmember. Under §1.1502–32(b), T's $30 gain decreases S's excess loss account in T's stock from $100 to $70 immediately before S is treated as disposing of T's stock. Under paragraph (b)(1) of this section, S is treated as taking into account its $70 excess loss account as gain from the disposition of T's stock. Under §1.1502–32(b), S's $70 gain from the excess loss account and T's $30 deferred gain that is taken into account eliminate P's $50 excess loss account in S's stock and increase P's basis in S's stock to $50 immediately before S becomes a nonmember.

Example 5. Worthlessness. (a) *Facts.* P forms S with a $150 contribution, and S borrows $150. For Year 1, S has a $50 ordinary loss that is carried over as part of the group's consolidated net operating loss. For Year 2, P has $160 of ordinary income, and S has a $160 ordinary loss. Under §1.1502–32(b), S's loss results in P having a $10 excess loss account in S's stock. During Year 3, the value of S's assets (without taking S's liabilities into account) continues to decline and S's stock becomes worthless within the meaning of section 165(g) (without taking into account §1.1502–80(c)). For Year 4, S has $10 of ordinary income.

(b) *Analysis.* Under paragraph (c)(1)(iii)(A) of this section, P is not treated as disposing of S's stock in Year 3 solely because S's stock becomes worthless within the meaning of section 165(g) (taking S's liabilities into account). In addition, because S's stock is not treated as worthless, section 382(g)(4)(D) does not prevent the Year 1 consolidated net operating loss carryover from offsetting S's $10 of income in Year 4.

(c) *Discharge of indebtedness.* The facts are the same as in paragraph (a) of this *Example 5,* except that, instead of S's stock becoming worthless within the meaning of section 165(g), S's creditor discharges $40 of S's indebtedness during Year 3, S is insolvent by more than $40 before the discharge, the discharge is excluded from the P group's gross income under section 108(a), and $40 of the $50 consolidated net operating loss carryover attributable to S is eliminated under section 108(b). Under §1.1502- 32(b)(3)(ii)(C), S's $40 of discharge income is treated as tax-exempt income because there is a corresponding decrease under §1.1502–32(b)(3)(iii) for elimination of the loss carryover. Under paragraph (c)(1)(iii)(B) of this section, P is treated as disposing of S's stock if the amount discharged is not included in gross income and is not treated as tax-exempt income under §1.1502–32(b)(3)(ii)(C). Because the discharge is treated as tax-exempt income, P is not treated as disposing of S's stock by reason of the discharge.

Example 6. Avoiding worthlessness. (a) *Facts.* P forms S with a $100 contribution and S borrows $150. For Years 1 through 5, S has a $210 ordinary loss that is absorbed by the group. Under §1.1502–32(b), S's loss results in P having a $110 excess loss account in S's stock. S defaults on the indebtedness, but the creditor does not discharge the debt (or initiate collection procedures). At the beginning of Year 6, S ceases any substantial operations with respect to the assets, but maintains their ownership with a principal purpose to avoid P's taking into account its excess loss account in S's stock.

(b) *Analysis.* Under paragraph (c)(1)(iii)(A) of this section, P's excess loss account on each of its shares of S's stock ordinarily is taken into account at the time substantially all of S's assets are treated as disposed of, abandoned, or destroyed for Federal income tax purposes. Under paragraph (e) of this section, however, S's assets are not taken into

account at the beginning of Year 6 for purposes of applying paragraph (c)(1)(iii)(A) of this section. Consequently, S is treated as worthless at the beginning of Year 6, and P's $110 excess loss account is taken into account.

(h) *Effective date*—(1) *Application*. This section applies with respect to determinations of the basis of (including an excess loss account in) the stock of a member in consolidated return years beginning on or after January 1, 1995. If this section applies, basis (and excess loss accounts) must be determined or redetermined as if this section were in effect for all years (including, for example, the consolidated return years of another consolidated group to the extent adjustments during those consolidated return years are still reflected). Any such determination or redetermination does not, however, affect any prior period.

(2) *Dispositions of stock before effective date*—(i) *In general*. If P was treated as disposing of stock of S in a tax year beginning before January 1, 1995 (including, for example, a deemed disposition because S was worthless) under the rules of this section then in effect, the amount of P's income, gain, deduction, or loss, and the stock basis reflected in that amount, are not redetermined under paragraph (h)(1) of this section. See paragraph (h)(3) of this section for the applicable rules.

(ii) *Intercompany amounts*. For purposes of this paragraph (h)(2), a disposition does not include a transaction to which § 1.1502–13, § 1.1502–13T, § 1.1502–14, or § 1.1502–14T applies. Instead, the transaction is deemed to occur as the income, gain, deduction, or loss (if any) is taken into account.

(3) *Prior law*. For prior determinations, see prior regulations under section 1502 as in effect with respect to the determination. See, e.g., § 1.1502–19 as contained in the 26 CFR part 1 edition revised as of April 1, 1994.

[T.D. 8560, 59 FR 41677, Aug. 15, 1994, as amended by T.D. 8597, 62 FR 12097, Mar. 14, 1997]

§ 1.1502–20 Disposition or deconsolidation of subsidiary stock.

(a) *Loss disallowance*—(1) *General rule*. No deduction is allowed for any loss recognized by a member with respect to the disposition of stock of a subsidiary. See also §§ 1.1502–11(c) (stock losses attributable to certain pre-1966 distributions) and 1.1502–80(c) (deferring the treatment of stock of members as worthless under section 165(g)).

(2) *Disposition*. *Disposition* means any event in which gain or loss is recognized, in whole or in part.

(3) *Coordination with loss deferral and other disallowance rules*—(i) *In general*. Loss with respect to the stock of a subsidiary may be deferred or disallowed under other applicable provisions of the Code and regulations, including section 267(f). Paragraph (a)(1) of this section does not apply to loss that is disallowed under any other provision. If loss is deferred under any other provision, paragraph (a)(1) of this section applies when the loss is taken into account. However, if an overriding event described in paragraph (a)(3)(ii) of this section occurs before the deferred loss is taken into account, paragraph (a)(1) of this section applies to the loss immediately before the event occurs even though the loss may not be taken into account until a later time. Any loss not disallowed under paragraph (a)(1) of this section is subject to disallowance or deferral under other applicable provisions of the Code and regulations.

(ii) *Overriding events*. For purposes of paragraph (a)(3)(i) of this section, the following are overriding events:

(A) The stock ceases to be owned by a member of the consolidated group.

(B) The stock is canceled or redeemed (regardless of whether it is retired or held as treasury stock).

(C) The stock is treated as disposed of under § 1.1502–19(c)(1)(ii)(B) or (c)(1)(iii).

(4) *Netting*. Paragraph (a) (1) of this section does not apply to loss with respect to the disposition of stock of a subsidiary, to the extent that, as a consequence of the same plan or arrangement, gain is taken into account by members with respect to stock of the same subsidiary having the same material terms. If the gain to which this paragraph (a)(4) applies is less than the amount of the loss with respect to the disposition of the subsidiary's stock, the gain is applied to offset loss with respect to each share disposed of as a

consequence of the same plan or arrangement in proportion to the amount of the loss deduction that would have been disallowed under paragraph (a)(1) of this section with respect to such share before the application of this paragraph (a)(4). If the same item of gain could be taken into account more than once in limiting the application of paragraphs (a)(1) and (b)(1) of this section, the item is taken into account only once.

(5) *Examples*. For purposes of the examples in this section, unless otherwise stated, all corporations have only one class of stock outstanding, all groups file consolidated returns on a calendar-year basis, the facts set forth the only corporate activity, all transactions are between unrelated persons, and tax liabilities are disregarded. The basis of each asset is the same for determining earnings and profits adjustments and taxable income. References to the investment adjustment system are references to the rules of §§ 1.1502–19, 1.1502–32 and 1.1502–33. The principles of this paragraph (a) are illustrated by the following examples.

Example 1. Loss attributable to recognized built-it gain. P buys all the stock of T for $100, and T becomes a member of the P group. T has an asset with a basis of $0 and a value of $100. T sells the asset for $100. Under the investment adjustment system, P's basis in the T stock increases to $200. Five years later, P sells all the T stock for $100 and recognizes a loss of $100. Under paragraph (a)(1) of this section, no deduction is allowed to P for the $100 loss.

Example 2. Effect of post-acquisition appreciation. P buys all the stock of T for $100, and T becomes a member of the P group. T has an asset with a basis of $0 and a value of $100. T sells the asset for $100. Under the investment adjustment system, P's basis in the T stock increases to $200. T reinvests the proceeds of the sale in an asset that appreciates in value to $180. Five years after the sale, P sells all the stock of T for $180 and recognizes a $20 loss. Under paragraph (a)(1) of this section, no deduction is allowed to P for the $20 loss.

Example 3. Disallowance of duplicated loss. P forms S with a contribution of $100 in exchange for all of the S stock, and S becomes a member of the P group. S has an operating loss of $60. The group is unable to use the loss, and the loss becomes a consolidated net operating loss carryover attributable to S. Five years later, P sells the stock of S for $40, recognizing a $60 loss. Under paragraph (a)(1) of this section, P's $60 loss on the sale of the S stock is disallowed. (See paragraph (g) of this section for the elective reattribution of S's $60 net operating loss to P in connection with the sale.)

Example 4. Deemed asset sale election. (i) P forms S with a contribution of $100 in exchange for all of the S stock, and S becomes a member of the P group. S buys an asset for $100, and the value of the asset declines to $40. P sells all the S stock to P1 for $40. Under paragraph (a)(1) of this section, P's $60 loss on the sale of the S stock is disallowed.

(ii) If P and P1 instead elect deemed asset sale treatment under section 338 (h) (10), S is treated as selling all of its assets, and no loss is recognized by P on its sale of the S stock. As a result of the recharacterization of the stock sale as an asset sale, the $60 loss in the asset is recognized. Under section 338 (h)(10), S's $60 loss is included in the consolidated return of the P group, and S is treated as liquidating into P under section 332 following the deemed asset sale. Paragraph (a)(1) of this section does not apply to S's $60 loss.

Example 5. Gain and loss recognized with respect to stock as a consequence of the same plan or arrangement. P, the common parent of a group, owns 50 shares of the stock of T with an aggregate basis of $50, and S, a wholly owned subsidiary of P, owns the remaining 50 shares of T's stock with an aggregate basis of $100. All of the stock has the same terms. P and S sell all the T stock to the public for $140 pursuant to a single public offering. P therefore recognizes a gain of $20 and S recognizes a loss of $30. For purposes of paragraph (a)(4) of this section, the gain and loss recognized by P and S is considered to be a consequence of the same plan or arrangement. Accordingly, the amount of S's $30 loss disallowed under paragraph (a)(1) of this section is limited to $10 (the $30 reduced by P's $20 gain).

Example 6. Deferred loss and recognized gain. (i) P is the common parent of a consolidated group, S is a wholly owned subsidiary of P, and T is a recently purchased, wholly owned subsidiary of S. S has a $100 basis in the T stock, and T has an asset with a basis of $40 and a value of $100. T sells the asset for $100, recognizing a $60 gain. Under the investment adjustment system, S's basis in the T stock increases from $100 to $160. S sells its T stock to P for $100 in an intercompany transaction, recognizing a $60 intercompany loss that is deferred under section 267(f) and § 1.1502–13. P subsequently sells all the stock of T for $100 to X, a member of the same controlled group (as defined in section 267(f)) as P but not a member of the P consolidated group.

(ii) Under paragraph (a)(3)(i) of this section, the application of paragraph (a)(1) of this section to S's $60 intercompany loss on the sale of its T stock to P is deferred, because S's intercompany loss is deferred under section 267(f) and § 1.1502–13. P's sale of

the T stock to X ordinarily would result in S's intercompany loss being taken into account under the matching rule of § 1.1502–13(c). The deferred loss is not taken into account under § 1.267(f)–1, however, because P's sale to X (a member of the same controlled group as P) is a second intercompany transaction for purposes of section 267(f). Nevertheless, paragraph (a)(3)(ii) of this section provides that paragraph (a)(1) of this section applies to the intercompany loss as a result of P's sale to X because the T stock ceases to be owned by a member of the P consolidated group. Thus, the loss is disallowed under paragraph (a)(1) of this section immediately before P's sale and is therefore never taken into account under section 267(f).

(iii) The facts are the same as in (i) of this *Example*, except that S is liquidated after its sale of the T stock to P, but before P's sale of the T stock to X, and P sells the T stock to X for $110. Under §§ 1.1502–13(j) and 1.267(f)–1(b), P succeeds to S's intercompany loss as a result of S's liquidation. Thus, paragraph (a)(3)(i) of this section continues to defer the application of paragraph (a)(1) of this section until P's sale to X. Under paragraph (a)(4) of this section, the amount of S's $60 intercompany loss disallowed under paragraph (a)(1) of this section is limited to $50 because P's $10 gain on the disposition of the T stock is taken into account as a consequence of the same plan or arrangement.

(iv) The facts are the same as in (i) of this *Example*, except that P sells the T stock to A, a person related to P within the meaning of section 267(b)(2). Although S's intercompany loss is ordinarily taken into account under the matching rule of § 1.1502–13(c) as a result of P's sale, § 1.267(f)–1(c)(2)(ii) provides that none of the intercompany loss is taken into account because A is a nonmember that is related to P under section 267(b). Under paragraph (a)(3)(i) of this section, paragraph (a)(1) of this section does not apply to loss that is disallowed under any other provision. Because § 1.267(f)–1(c)(2)(ii) and section 267(d) provide that the benefit of the intercompany loss is retained by A if the property is later disposed of at a gain, the intercompany loss is not disallowed for purposes of paragraph (a)(3)(i) of this section. Thus, the intercompany loss is disallowed under paragraph (a)(1) of this section immediately before P's sale and is therefore never taken into account under section 267(d).

(b) *Basis reduction on deconsolidation*—(1) *General rule*. If a member's basis in a share of stock of a subsidiary exceeds its value immediately before a deconsolidation of the share, the basis of the share is reduced at that time to an amount equal to its value. If both a disposition and a deconsolidation occur with respect to a share in the same transaction, paragraph (a) of this section applies and, to the extent necessary to effectuate the purposes of this section, this paragraph (b) applies following the application of paragraph (a) of this section.

(2) *Deconsolidation*. Deconsolidation means any event that causes a share of stock of a subsidiary that remains outstanding to be no longer owned by a member of any consolidated group of which the subsidiary is also a member.

(3) *Value*. *Value* means fair market value.

(4) *Netting*. Paragraph (b)(1) of this section does not apply to reduce the basis of stock of a subsidiary, to the extent that, as a consequence of the same plan or arrangement as that giving rise to the deconsolidation, gain is taken into account by members with respect to stock of the same subsidiary having the same material terms. If the gain to which this paragraph (b)(4) applies is less than the amount of basis reduction with respect to shares of the subsidiary's stock, the gain is applied to offset basis reduction with respect to each share deconsolidated as a consequence of the same plan or arrangement in proportion to the amount of the reduction that would have been required under paragraph (b)(1) of this section with respect to such share before the application of this paragraph (b)(4). If the same item of gain could be taken into account more than once in limiting the application of paragraphs (a)(1) and (b)(1) of this section, the time is taken into account only once.

(5) *Loss within 2 years after basis reduction*—(i) *In general*. If a share is deconsolidated and a direct or indirect disposition of the share occurs within 2 years after the date of the deconsolidation, a separate statement entitled ''Statement Pursuant to Section § 1.1502–20(b)(5)'' must be filed with the taxpayer's return for the year of disposition. If the taxpayer fails to file the statement as required, no deduction is allowed for any loss recognized with respect to the disposition. A disposition after the 2-year period described in this paragraph (b)(5) that is pursuant to an agreement, option, or other arrangement entered into within

the 2-year period is treated as a disposition within the 2-year period for purposes of this section.

(ii) *Contents of statement.* The statement required under paragraph (b)(5)(i) of this section must contain—

(A) The name and employer identification number (E.I.N.) of the subsidiary.

(B) The amount of prior basis reduction (if any) with respect to the stock of the subsidiary under paragraph (b)(1) of this section.

(C) The basis of the stock of the subsidiary immediately before the disposition.

(D) The amount realized on the disposition.

(E) The amount of the loss recognized on the disposition.

(6) *Examples.* The principles of this paragraph (b) are illustrated by the following examples.

Example 1. Simultaneous application of loss disallowance rule and basis reduction rule to stock of the same subsidiary. (i) P buys all the stock of T for $100, and T becomes a member of the P group. T has an asset with a basis of $0 and a value of $100. T sells the asset for $100. Under the investment adjustment system, P's basis in the T stock increases to $200. Five years later, P sells 60 shares of T stock for $60 and recognizes $60 loss on the sale. The sale causes a deconsolidation of the remaining 40 shares of T stock held by P.

(ii) P's $60 loss on the sale of T stock is disallowed under paragraph (a)(1) of this section. Under paragraph (b)(1) of this section, P must reduce the basis of the 40 shares of T stock it continues to own from $80 to $40, the value of the shares immediately before the deconsolidation.

(iii) Although P's disposition of the 60 shares also causes a deconsolidation of these shares, paragraph (b)(1) of this section provides that, if both paragraph (a) and paragraph (b) of this section apply to a share in the same transaction, paragraph (a) of this section applies first and this paragraph (b) applies only to the extent necessary to effectuate the purposes of this section. Under paragraph (a)(1) of this section, P's $60 loss on the sale of the 60 shares is disallowed. Under the facts of this example, it is not necessary to also apply this paragraph (b) to the 60 shares in order to effectuate the purposes of this section.

Example 2. Deconsolidation of subsidiary stock on contribution to a partnership. (i) P buys all the stock of T for $100, and T becomes a member of the P group. T has an asset with a basis of $0 and a value of $100. T sells the asset for $100. Under the investment adjustment system, P's basis in the T stock increases to $200. Five years later, P transfers all the stock of T to partnership M in exchange for a partnership interest in M, in a transaction to which section 721 applies.

(ii) At the time of the exchange, P's basis in the T stock is $200 and the T stock's value is $100. Under paragraph (b) of this section, the transfer to M causes a deconsolidation of the T stock, and P must reduce its basis in the T stock, immediately before the transfer to M, from $200 to the stock's $100 value at the time of the transfer. As a result, P has a basis of $100 in its interest in M, and M has a basis of $100 in the stock of T.

Example 3. Simultaneous application of loss disallowance and basis reduction to stock of different subsidiaries. (i) P owns all the stock of S, which in turn owns all the stock of S1, and S and S1 are members of the P group. P's basis in the S stock is $100 and S's basis in the S1 stock is $100. S1 buys all the stock of T for $100, and T becomes a member of the P group. T has an asset with a basis of $0 and a value of $100. T sells the asset for $100. Under the investment adjustment system, S1's basis in the T stock, S's basis in the S1 stock, and P's basis in the S stock each increase from $100 to $200. S then sells all the S1 stock for $100 and recognizes a loss of $100.

(ii) Under paragraph (a)(1) of this section, S's $100 loss on the sale of the S1 stock is disallowed.

(iii) If S1 and T are not members of a consolidated group immediately after the sale of the stock of S1, the T stock is deconsolidated and, under paragraph (b)(1) of this section, S1 must reduce the basis of the T stock to its $100 value immediately before the sale.

(iv) If S1 and T are members of a consolidated group immediately after the sale of the S1 stock, the T stock is not deconsolidated, and no reduction is required under paragraph (b)(1) of this section.

Example 4. Extending the time period for dispositions. (i) In Year 1, P, the common parent of a group, buys all 100 shares of the stock of T for $100. T's only asset has a basis of $0 and a value of $100. T sells the asset for $100. Under the investment adjustment system, P's basis in the T stock increases from $100 to $200. At the beginning of Year 5, P causes T to issue 30 additional shares of stock to the public for $30. This issuance causes a deconsolidation of the T stock owned by P, and paragraph (b)(1) of this section requires P to reduce its basis in the T stock from $200 to $100.

(ii) Within 2 years after the date of the basis reduction, P agrees to sell all of its T stock for $90 at the end of Year 7. Under paragraph (b)(5) of this section, P's disposition of the T stock at the end of Year 7 is treated as occurring within the 2-year period following the basis reduction, because the disposition is pursuant to an agreement

reached within 2 years after the basis reduction. Accordingly, P's $10 loss may not be deducted unless P files the statement required under paragraph (b)(5) of this section. This result is reached whether or not the agreement is in writing. P's disposition would also have been treated as occurring within the 2-year period if the disposition were pursuant to an option issued within the period.

Example 5. Deferred loss and subsequent basis reduction. (i) P is the common parent of a consolidated group, S is a wholly owned subsidiary of P, and T is a recently purchased, wholly owned subsidiary of S. S has a $100 basis in the T stock, and T has an asset with a basis of $40 and a value of $100. T sells the asset for $100, recognizing $60 of gain. Under the investment adjustment system, S's basis in the T stock increases from $100 to $160. S sells its T stock to P for $100 in an intercompany transaction, recognizing a $60 intercompany loss that is deferred under section 267(f) and § 1.1502–13. T issues 30 additional shares of stock to the public for $30 which causes a deconsolidation of the T stock owned by P.

(ii) Under paragraph (a)(3)(i) of this section, the application of paragraph (a)(1) of this section to S's intercompany loss on the sale of its T stock to P is deferred because S's loss is deferred under section 267(f) and § 1.1502–13. Because the fair market value of the T stock owned by P is $100 immediately before the deconsolidation and P has a $100 basis in the stock at that time, no basis reduction is required under paragraph (b)(1) of this section.

(iii) T's issuance of additional shares to the public results in S's intercompany loss being taken into account under the acceleration rule of § 1.1502–13(d) because there is no difference between P's $100 basis in the T stock and the $100 basis the T stock would have had if P and S had been divisions of a single corporation. S's loss taken into account is disallowed under paragraph (a)(1) of this section.

Example 6. Gain and basis reduction with respect to the same plan or arrangement. (i) P, the common parent of a group, owns 50 shares of T stock with an aggregate basis of $50, and S, a wholly owned subsidiary of P, owns the remaining 50 shares of T stock with an aggregate basis of $100. All of the stock has the same terms. P sells all of its T stock to the public for $70 and recognizes a $20 gain. The sale causes a deconsolidation of S's 50 shares of T stock.

(ii) Under paragraph (b)(1) of this section, S must reduce the basis of its 50 shares of T stock from $100 to $70, the value of the shares immediately before the deconsolidation. However, under paragraph (b)(4) of this section, because P's $20 gain is recognized as a consequence of the same plan or arrangement as that giving rise to the deconsolidation, S's basis reduction is eliminated to the extent of $20. Thus, S must reduce the basis of its T stock from $100 to $90.

Example 7. Netting allocated between loss disallowance and basis reduction. (i) P is the common parent of a group and S is its wholly owned subsidiary. P and S each own 50 shares of T stock and each has an aggregate basis of $50. All of the stock has the same terms. S recently purchased its T stock from S1, a lower tier subsidiary, in an intercompany transaction in which S1 recognized a $30 intercompany gain that was deferred under § 1.1502–13. T has an asset with a basis of $0 and a value of $100. T sells the asset for $100, recognizing $100 of gain. Under the investment adjustment system, P and S each increase the basis of their T stock to $100. S sells all of its T stock to the public for $50 and recognizes a $50 loss. The sale causes a deconsolidation of P's T stock.

(ii) S's $50 loss on the sale of T stock is disallowed under paragraph (a)(1) of this section. Under paragraph (b)(1) of this section, P must reduce its $100 basis in the T stock to the $50 value immediately before the deconsolidation.

(iii) Under the matching rule of § 1.1502–13, S's sale of its T stock results in S1's $30 intercompany gain being taken into account. Under paragraphs (a)(4) and (b)(4) of this section, the gain may be taken into account by P and S in limiting the application of paragraphs (a)(1) and (b)(1) of this section, but it may be taken into account only once. Under paragraph (a)(4) of this section, S may apply the gain to decrease the amount of loss disallowed under paragraph (a)(1) of this section from $50 to $20. None of the gain remains to decrease the $50 of P's basis reduction under paragraph (b)(1) of this section. (P may instead apply the gain to decrease the basis reduction under paragraph (b)(1) of this section instead of S decreasing its disallowed loss, but if the T stock is sold within 2 years, the statement described in paragraph (b)(5) of this section must be filed if a deduction is to be allowed for any loss recognized on the disposition.)

(c) *Allowable loss*—(1) *General rule.* The amount of loss disallowed under paragraph (a)(1) of this section and the amount of basis reduction under paragraph (b)(1) of this section with respect to a share of stock shall not exceed the sum of the following amounts—

(i) *Extraordinary gain dispositions.* The amount of income or gain (or its equivalent), net of directly related expenses, that is allocated to the share from extraordinary gain dispositions.

(ii) *Positive investment adjustments.* The amount of the positive adjustment (if any) with respect to the share under § 1.1502–32 for each consolidated return

year, but only to the extent the amount exceeds the amount described in paragraph (c)(1)(i) of this section for the year.

(iii) *Duplicated loss.* The amount of duplicated loss with respect to the share.

(2) *Operating rules.* For purposes of applying paragraph (c)(1) of this section—

(i) *Extraordinary gain dispositions.* An ''extraordinary gain disposition'' is—

(A) An actual or deemed disposition of—

(*1*) A capital asset as defined in section 1221 (determined without the application of any other rules of law).

(*2*) Property used in a trade or business as defined in section 1231(b) (determined without the application of any holding period requirement).

(*3*) An asset described in section 1221 (1), (3), (4), or (5), if substantially all the assets in such category from the same trade or business are disposed of in one transaction (or series of related transactions).

(*4*) Assets disposed of in an applicable asset acquisition under section 1060(c).

(B) A positive section 481(a) adjustment.

(C) A discharge of indebtedness.

(D) Any other event (or item) identified in guidance published in the Internal Revenue Bulletin.

An extraordinary gain disposition is taken into account under paragraph (c)(1)(i) of this section only if it occurs on or after November 19, 1990. For this purpose, federal income taxes may be directly related to extraordinary gain dispositions only to the extent of the excess (if any) of the group's income tax liability actually imposed under subtitle A of the Internal Revenue Code for the taxable year of the extraordinary gain dispositions over the group's income tax liability for the taxable year redetermined by not taking into account the extraordinary gain dispositions. For this purpose, the group's income tax liability actually imposed and its redetermined income tax liability are determined without taking into account the foreign tax credit under section 27(a) of the Code.

(ii) *Positive investment adjustments.* For purposes of paragraph (c)(1)(ii) of this section, a positive adjustment under §1.1502–32 is the sum of the amounts under §1.1502–32(b)(2) (i) through (iii) for the consolidated return year (the adjustment determined without taking distributions into account). However, amounts included in any loss carryover are taken into account in the year they arise rather than the year absorbed.

(iii) *Applicable amounts.* Amounts are described in paragraphs (c)(1)(i) and (ii) of this section only to the extent they are reflected in the basis of the share, directly or indirectly, immediately before the disposition or deconsolidation. For this purpose, an amount is reflected in the basis of a share if the share's basis would have been different without the amount. However, amounts included in any loss carryover are taken into account in the year they arise rather than the year absorbed.

(iv) *Related party rule.* The amounts described in paragraphs (c)(1) (i) and (ii) of this section are not reduced or eliminated by reason of an acquisition of the share from a person related within the meaning of section 267(b) or section 707(b)(1), substituting ''10 percent'' for ''50 percent'' each place that it appears, even if the share is not transferred basis property as defined in section 7701 (a)(43).

(v) *Pre-September 13, 1991 positive investment adjustments—(A) In general.* The amount determined under paragraph (c)(1)(ii) of this section is limited for tax years of the subsidiary ending on or before September 13, 1991. The amount may not exceed the net increase, if any, in the basis of the share from—

(*1*) The date the share was first acquired by a member (whether or not a member at that time); to

(*2*) The end of the last taxable year ending on or before September 13, 1991 (or, if earlier, the date of the disposition or deconsolidation). If the share is transferred basis property (within the meaning of section 7701 (a)(43) from a prior consolidated group, the date under paragraph (c)(2)(v)(A)(*1*) of this section is the date the share was first acquired by a member of the prior group. For purposes of this paragraph (c)(2)(v)(A), an increase in an excess loss account is treated as a decrease in stock basis and a decrease in an excess

loss account is treated as an increase in stock basis.

(B) *Cessation of netting.* If a lower amount would result under paragraph (c)(1)(ii) of this section by determining the amount under this paragraph (c)(2)(v) as of the end of an earlier taxable year ending after December 31, 1986—

(*1*) The amount under this paragraph (c)(2)(v) is determined as of the earlier year end; and

(*2*) The amount determined under paragraph (c)(1)(ii) of this section is not limited for tax years of the subsidiary ending after the earlier year end.

(vi) *Duplicated loss.* ''Duplicated loss'' is determined immediately after a disposition or deconsolidation, and equals the excess (if any) of—

(A) The sum of—

(*1*) The aggregate adjusted basis of the assets of the subsidiary other than any stock and securities that the subsidiary owns in another subsidiary, and

(*2*) Any losses attributable to the subsidiary and carried to the subsidiary's first taxable year following the disposition or deconsolidation, and

(*3*) Any deferred deductions (such as deductions deferred under section 469) of the subsidiary, over

(B) The sum of—

(*1*) The value of the subsidiary's stock, and

(*2*) Any liabilities of the subsidiary, and

(*3*) Any other relevant items.

The amounts determined under this paragraph (c)(2)(vi) with respect to a subsidiary include its allocable share of corresponding amounts with respect to all lower tier subsidiaries. If 80 percent or more in value of the stock of a subsidiary is acquired by purchase in a single transaction (or in a series of related transactions during any 12-month period), the value of the subsidiary's stock may not exceed the purchase price of the stock divided by the percentage of the stock (by value) so purchased. For this purpose, stock is acquired by purchase if the transferee is not related to the transferor within the meaning of sections 267(b) and 707(b)(1), substituting ''10 percent'' for ''50 percent'' each place that it appears, and the transferee's basis in the stock is determined wholly by reference to the consideration paid for such stock.

(vii) *Disallowance amounts applied only once.* The amounts described in paragraph (c)(1) of this section are not applied more than once to disallow a loss, reduce basis, or reattribute loss under this section.

(3) *Statement of allowed loss.* Paragraph (c)(1) of this section applies only if the separate statement required under this paragraph (c)(3) is filed with the taxpayer's return for the year of the disposition or deconsolidation. The statement must be entitled ''ALLOWED LOSS UNDER SECTION 1.1502–20(c)'' and must contain—

(i) The name and employer identification number (E.I.N.) of the subsidiary.

(ii) The basis of the stock of the subsidiary immediately before the disposition or deconsolidation.

(iii) The amount realized on the disposition and the amount of fair market value on the deconsolidation.

(iv) The amount of the deduction not disallowed under paragraph (a)(1) of this section by reason of this paragraph (c) and the amount of basis not reduced under paragraph (b)(1) of this section by reason of this paragraph (c).

(v) The amount of loss disallowed under paragraph (a)(1) of this section and the amount of basis reduced under paragraph (b)(1) of this section.

(4) *Examples.* For purposes of the examples in this paragraph, unless otherwise stated, the group files the statement required under paragraph (c)(3) of this section. The principles of this paragraph (c) are illustrated by the following examples.

Example 1. Allowable loss attributable to lost built-in gain. (i) Individual A forms T. P buys all the stock of T from A for $100, and T becomes a member of the P group. T has a capital asset with a basis of $0 and a value of $100. The value of the asset declines, and T sells the asset for $40. Under the investment adjustment system, P's basis in the T stock increases to $140. P then sells all the stock of T for $40 and recognizes a loss of $100.

(ii) The amount of the $100 loss disallowed under paragraph (a)(1) of this section may not exceed the amount determined under paragraph (c)(1) of this section. Under paragraphs (c)(2) (i) and (iii) of this section, T's $40 gain is from an extraordinary gain disposition and the amount is reflected in the

basis of the T stock under § 1.1502–32 immediately before the disposition. Thus, the gain is described in paragraph (c)(1)(i) of this section. Because this amount is the only amount described in paragraph (c)(1) of this section, the amount of P's $100 loss that is disallowed under paragraph (a)(1) of this section is limited to $40. (No amount is described in paragraph (c)(1)(ii) of this section because the amount of T's positive investment adjustments does not exceed the amount included under paragraph (c)(1)(i) of this section.)

(iii) The results would be the same if the asset, instead of being owned by T, is owned by a partnership in which T is a partner and T is allocated the $40 of gain under section 704(b). Under paragraphs (c)(2) (i) and (iii) of this section, T's $40 gain is from an extraordinary gain disposition, and the gain is reflected in the basis of the T stock under § 1.1502–32 immediately before the disposition.

Example 2. Extraordinary gain dispositions. (i) Individual A forms T. P buys all the stock of T from A for $100 in Year 1, and T becomes a member of the P group. T owns a capital asset, asset 1, with a basis of $0 and a value of $100. T sells asset 1 for $100 in Year 1 and invests the proceeds in a trade or business asset, asset 2. For Year 2, asset 2 produces $30 of gross operating income and $20 of cost recovery deductions. On December 31 of Year 2, asset 2 has an $80 adjusted basis and T disposes of asset 2 for $85; however, because T incurs $20 of expenses directly related to the sale of asset 2, the disposition produces a $15 loss that is taken into account in the determination of taxable income or loss under § 1.1502–32(b)(2)(i) (the loss offsets T's $10 of operating income for Year 2, as well as $5 of operating income of P in that year). Under the investment adjustment system, P's basis in the T stock increases by $95, to $195, because T has $110 of income and a $15 loss. P sells the T stock for $95 in Year 5 and recognizes a $100 loss.

(ii) Under paragraphs (c)(2) (i) and (iii) of this section, the $100 gain from the disposition of asset 1 is from an extraordinary gain disposition and is reflected in the basis of the T stock. Thus, the gain is described in paragraph (c)(1)(i) of this section. The sale of asset 2 is not taken into account under paragraph (c)(1)(i) of this section because, net of directly related expenses, T does not have income or gain from the sale. (No amount is described under paragraph (c)(1)(ii) of this section because T's positive investment adjustments are taken into account under paragraph (c)(1)(i) of this section.) Because the $100 amount described under paragraph (c)(1)(i) of this section equals P's $100 loss from the disposition of the T stock, all of the loss is disallowed.

Example 3. Positive investment adjustments. (i) Individual A forms T. S, a member of the P group, buys all the stock of T from A for $100, and T becomes a member of the P group. T has an asset with a basis of $0 and a value of $100. The asset earns $100 of operating income in Year 1 and declines in value to $0. T invests the operating income in another asset that produces a $25 operating loss for Year 2. Under the investment adjustment system, S's basis in the T stock increases to $200 at the end of Year 1, and decreases to $175 at the end of Year 2. S sells all the stock of T for $75 in Year 5 and recognizes a loss of $100.

(ii) Under paragraph (c)(1)(ii) of this section, the $100 of income from Year 1 is a positive investment adjustment. The amount is not reduced by the $25 operating loss for Year 2. Because the $100 amount described under paragraph (c)(1)(ii) of this section equals S's $100 loss from the disposition of the T stock, all of the loss is disallowed.

Example 4. Treatment of net operating income as attributable to built-in gain. (i) Individual A forms T. P buys all the stock of T from A for $100, and T becomes a member of the P group. T has a capital asset with a basis of $0 and a value of $100. The asset declines in value to $40. The asset earns $100 of operating income unrelated to its $60 decline in value. Under the investment adjustment system, P's basis in the T stock increases to $200. P then sells all the stock of T for $140 (the asset worth $40 and $100 cash) and recognizes a loss of $60.

(ii) The $100 adjustment to the basis of the T stock is an amount described in paragraph (c)(1)(ii) of this section. Because this amount exceeds the amount of loss otherwise disallowed under paragraph (a)(1) of this section, P's entire $60 loss from the disposition of T stock is disallowed.

Example 5. Carryover basis transactions—amounts attributable to separate return years. (i) Individual A forms T. S purchases all the stock of T from A for $100, and T becomes a member of the S group. T has a capital asset with a basis of $0 and a value of $100. T sells the asset for $100. Under the investment adjustment system, S's basis in the T stock increases to $200. P buys all of the stock of S for $100, and both S and T become members of the P group. S then sells the T stock for $100 and recognizes a loss of $100.

(ii) Under paragraph (c)(2)(iii) of this section, the $100 adjustment to S's basis in the T stock while a member of the S group is an amount described in paragraph (c)(1)(i) of this section with respect to the P group because it continues to be reflected in the basis of the T stock immediately before the stock is disposed of. Because this amount equals the loss otherwise disallowed under paragraph (a)(1) of this section, S's $100 loss from the disposition of T stock is disallowed.

Example 6. Cost basis for subsidiary stock. (i) In Year 1, individual A forms T. T's assets appreciate in value from $0 to $100, and T

recognizes $100 of gain in an extraordinary gain disposition. T reinvests the sale proceeds in assets that appreciate in value to $150. In Year 3, A sells all of the T stock to P for $150, and T becomes a member of the P group. While a member of the P group, T's assets decline in value to $130 and P sells the T stock in Year 7 for $130 and recognizes a $20 loss.

(ii) Although T has a $100 gain from extraordinary gain dispositions, the gain is not reflected in P's basis in the T stock within the meaning of paragraph (c)(2)(iii) of this section. P's basis reflects the stock's value at the time of P's purchase, and is determined without regard to whether T recognized the gain before the purchase. Thus, no part of T's gain is described in paragraph (c)(1) of this section, and no part of the $20 loss is disallowed under paragraph (a) of this section. (For rules that apply if A and P are related persons, see paragraph (c)(2)(iv) of this section.)

Example 7. Adjustments to stock basis under applicable rules of law. (i) Individual A forms T, and T's assets subsequently appreciate. T borrows $100 on a nonrecourse basis secured by the appreciated assets. P buys all of the stock of T from A for $150. After becoming a member of the P group, T has a $100 operating loss that is absorbed in the determination of consolidated taxable income and P's basis in the T stock is reduced to $50 under §1.1502–32. Because T's assets have declined in value, T's creditors discharge $60 of T's indebtedness. The $60 discharge is not included in T's gross income under section 108(a), but no attributes are reduced under section 108(b).

(ii) Under paragraph (c)(2)(i) of this section, the discharge of indebtedness is an extraordinary gain disposition. Under §1.1502–32(b)(3)(ii), however, the $60 discharge of indebtedness is not treated as tax-exempt income that increases P's basis in the T stock. Consequently, under paragraph (c)(2)(iii) of this section, T's discharge of indebtedness income is not reflected in P's basis in the T stock. Thus, there is no amount under paragraph (c)(1) of this section.

(iii) The facts are the same as in paragraph (i) of this *Example,* except that $60 of T's operating loss is not absorbed and is included in a consolidated net operating loss that is carried over under §§1.1502–21A or 1.1502–21, and the $60 is eliminated from the carryover under section 108(b) as a result of T's discharge of indebtedness. The absorption of $40 of T's loss reduces P's basis in the T stock from $150 to $110. The $60 discharge of indebtedness is treated as tax-exempt income that increases P's basis in the T stock, and the $60 attribute reduction is treated as a noncapital, nondeductible expense that reduces P's basis in the T stock. Thus, P's basis in T's stock remains $110 following the discharge and attribute reduction. Because P's basis is $110, rather than $50, the discharge of indebtedness income is reflected in P's basis for purposes of paragraph (c)(2)(iii) of this section. Thus, the amount under paragraph (c)(1)(i) of this section is $60.

Example 8. Duplicated loss. (i) Individual A forms T with a contribution of $100 in exchange for all of the T stock. Individual B forms T1 with a contribution of land that has a $90 basis and $100 value. T buys all the stock of T1 from B for $100. P buys all the stock of T from A for $100, and both T and T1 become members of the P group. The value of T1's land declines to $40. P sells all of the T stock for $40 and recognizes a loss of $60.

(ii) Under paragraph (c)(1)(iii) of this section, P's amount of duplicated loss is $50. This is computed under paragraph (c)(2)(vi) of this section immediately after the disposition as the excess of—

(A) The $90 aggregate adjusted basis of the assets of T and T1 (other than stock and securities of T1 owned by T), over

(B) The $40 fair market value of the T stock (determined under paragraph (c)(2)(vi) of this section). Because this amount is the only amount described in paragraph (c)(1) of this section, the amount of P's $60 loss disallowed under paragraph (a)(1) of this section is limited to $50.

(iii) The result would be the same if the value of T1's property did not decline and T1 instead had an operating loss of $60 (attributable to borrowed funds) which the P group was unable to use. In that case, the $50 excess of the sum of—

(A) The $90 aggregate adjusted basis of the assets of T and T1 (other than stock and securities of members of the P group), plus the $60 net operating loss attributable to T1 and carried to its first taxable year following the disposition, over

(B) The sum of the $40 fair market value of the T stock, plus the $60 of T1 liabilities, is an amount described in paragraph (c)(2)(vi) of this section. (See paragraph (g) of this section for the elective reattribution of T1's $60 net operating loss to P in connection with the sale.)

Example 9. Intercompany stock sales.

(i) P is the common parent of a consolidated group, S is a wholly owned subsidiary of P, and T is a wholly owned recently purchased subsidiary of S. S has a $100 basis in the T stock, and T has a capital asset with a basis of $0 and a value of $100. T's asset declines in value to $60. Before T has any positive investment adjustments or extraordinary gain dispositions, S sells its T stock to P for $60. T's asset reappreciates and is sold for $100, and T recognizes $100 of gain. Under the investment adjustment system, P's basis in the T stock increases to $160. P then sells all of the T stock for $100 and recognizes a loss of $60.

(ii) S's sale of the T stock to P is an intercompany transaction. Thus, S's $40 loss is

deferred under section 267(f) and § 1.1502–13. Under paragraph (a)(3) of this section, the application of paragraph (a)(1) of this section to S's $40 loss is deferred until the loss is taken into account. Under the matching rule of § 1.1502–13(c), the loss is taken into account to reflect the difference for each year between P's corresponding items taken into account and P's recomputed corresponding items (the corresponding items that P would take into account for the year if S and P were divisions of a single corporation). If S and P were divisions of a single corporation and the intercompany sale were a transfer between the divisions, P would succeed to S's $100 basis and would have a $200 basis in the T stock at the time it sells the T stock ($100 of initial basis plus $100 under the investment adjustment system). S's $40 loss is taken into account at the time of P's sale of the T stock to reflect the $40 difference between the $60 loss P takes into account and P's recomputed $100 loss.

(iii) Under the matching rule of § 1.1502–13(c), the attributes of S's $40 loss and P's $60 loss are redetermined to produce the same effect on consolidated taxable income (and consolidated tax liability) as if S and P were divisions of a single corporation. Under § 1.1502–13(b)(6), attributes of the losses include whether they are disallowed under this section. Because the amount described in paragraph (c)(1) of this section is $100, both S's $40 loss and P's $60 loss are disallowed.

(d) *Successors*—(1) *General rule*. This section applies, to the extent necessary to effectuate the purposes of this section, to any property the basis of which is determined, directly or indirectly, in whole or in part, by reference to the basis of a subsidiary's stock.

(2) *Examples*. The principles of this paragraph (d) are illustrated by the following examples.

Example 1. Status of successor as member. (i) P, the common parent of a group, buys all the stock of T for $100. T's only asset has a basis of $0 and a value of $100. T sells the asset for $100, and buys another asset for $100. Under the investment adjustment system, P's basis in the T stock increases to $200, and the earnings and profits of P increase by $100. P later transfers all the stock of T to an unrelated consolidation group in exchange for 10 percent of the stock of X, the common parent of that group, in a transaction described in section 368(a)(1)(B). At the time of the exchange, the value of the X stock received by P is $80.

(ii) Under section 358, P has a basis of $200 in the X stock it receives in exchange for T. Under section 362, X has a $200 basis in the T stock.

(iii) Neither paragraph (a)(1) nor (b)(1) of this section applies to the stock of T on P's transfer of the stock to the X group, because no gain or loss is recognized on the transfer, and the transfer is not a deconsolidation of the stock of T under paragraph (b)(2) of this section.

(iv) The X stock owned by P after the reorganization is a successor interest to the T stock because P's basis in the X stock is determined by reference to P's basis in the T stock. The purposes of this section require that the reorganization exchange be treated as a deconsolidation event with respect to P's interest in the X stock. Because X is not a member of the P group, a failure to reduce the basis of the X stock owned by P to its fair market value would permit the P group to recognize and deduct the loss attributable to the T stock. However, because T is a member of the X group, a reduction in the basis of the T stock is not necessary to prevent the X group from recognizing and deducting the loss arising in the P group. The transfer of T stock to X therefore constitutes a deconsolidation of the X stock but not the T stock. Therefore, P must reduce its basis in the X stock from $200 to its $80 value at that time. However, X's basis in the T stock remains $200.

Example 2. Continued application after deconsolidation. (i) P, the common parent of a group, buys all the stock of T for $100. T's only asset has a basis of $0 and a value of $100. T sells the asset for $100, and buys another asset for $100. Under the investment adjustment system, P's basis in the T stock increases to $200. P later transfers all the stock of T to partnership M in exchange for a partnership interest in M, in a transaction to which section 721 applies. The value of the T stock immediately before the transfer to M is $100. Less than 2 years later, P sells its interest in M for $80.

(ii) Under paragraph (b)(1) of this section, because the stock of T is deconsolidated on the transfer to M, immediately before the transfer to M, P reduces its basis in the T stock to the stock's $100 value immediately before the transfer. As a result, P has a basis of $100 in its interest in M, and M has a basis of $100 in the T stock.

(iii) When P sells its interest in M for $80, it recognizes a $20 loss. Because the basis of P's interest in M is determined by reference to P's basis in the T stock, and the reporting requirements could otherwise be circumvented, P's partnership interest in M is a successor interest to the T stock. Under paragraph (b)(5) of this section, P is required to file a statement with its return for the year of its disposition of its interest in M in order to deduct its loss. If P does not file the required statement described in paragraph (b)(5) of this section, P's loss on the disposition of its interest in M is disallowed.

(e) *Anti-avoidance rules*—(1) *General rule*. The rules of § 1.1502–20 must be applied in a manner that is consistent with and reasonably carries out their purposes. If a taxpayer acts with a view to avoid the effect of the rules of this section, adjustments must be made as necessary to carry out their purposes.

(2) *Anti-stuffing rule*—(i) *Application*. This paragraph (e)(2) applies if—

(A) A transfer of any asset (including stock and securities) on or after March 9, 1990 is followed within 2 years by a direct or indirect disposition or a deconsolidation of stock, and

(B) The transfer is with a view to avoiding, directly or indirectly, in whole or in part—

(*1*) The disallowance of loss on the disposition or the basis reduction on the deconsolidation of stock of a subsidiary, or

(*2*) The recognition of unrealized gain following the transfer.

A disposition or deconsolidation after the 2-year period described in this paragraph (e)(2)(i) that is pursuant to an agreement, option, or other arrangement entered into within the 2-year period is treated as a disposition or deconsolidation within the 2-year period for purposes of this section.

(ii) *Basis reduction*. If this paragraph (e)(2) applies, the basis of the stock is reduced, immediately before the disposition or deconsolidation, to cause the disallowance of loss, the reduction of basis, or the recognition of gain, otherwise avoided by reason of the transfer.

(3) *Examples*. The principles of this paragraph (e) are illustrated by the following examples.

Example 1. Shifting of value. (i) P buys all the stock of T for $100, and T becomes a member of the P group. T has an asset with a basis of $0 and a value of $100. With the view described in paragraph (e)(1) of this section, P transfers land with a value of $100 and a basis of $100 to T in exchange for preferred stock with a $200 redemption price and liquidation preference. The $100 redemption premium (the excess of the $200 redemption price over the $100 issue price) ultimately increases the value of the preferred stock from $100 to $200 (and decreases the value of the common stock). T sells the built-in gain asset for $100, and P's aggregate basis in S's common and preferred stock increases to $300. In addition, as a result of a cumulative redetermination under § 1.1502–32(c)(4), P's basis in the T preferred stock increases from $100 to $200 and P's basis in the common stock remains $100. P subsequently sells the common stock at a loss.

(ii) Under section 305, the redemption premium is treated as a distribution of property to which section 301 and § 1.1502–13(f)(2) apply. Under §§ 1.1502–13 and 1.1502–32, P's aggregate basis in the preferred and common stock is unaffected by the deemed distributions.

(iii) P's loss on the sale of the common stock is disallowed under paragraph (e)(1) of this section. This disallowance prevents the preferred stock from shifting value and stock basis adjustments from the common stock to avoid the disallowance of loss under this section.

Example 2. Basic stuffing case. (i) In Year 1, P buys all the stock of T for $100, and T becomes a member of the P group. T has an asset with a basis of $0 and a value of $100. T sells the asset for $100. Under the investment adjustment system, P's basis in the T stock increases from $100 to $200. In Year 5, P transfers to T an asset with a basis of $0 and a value of $100 in a transaction to which section 351 applies, with the view described in paragraph (e)(2)(i) of this section. In Year 6, P sells all the stock of T for $200.

(ii) Under paragraph (e)(2)(ii) of this section, P must reduce the basis in its T stock by $100 immediately before the sale. This basis reduction causes a $100 gain to be recognized on the sale.

(iii) The $100 basis reduction also would be required if the T stock is deconsolidated in Year 6 instead of being sold. P must reduce the basis in its T stock by $100 immediately before the deconsolidation.

(iv) The $100 basis reduction also would be required if the P stock were acquired at the beginning of Year 6 by the M consolidated group, even though the asset transfer took place outside the M group. Paragraph (e)(2)(i) of this section requires only that the transferor have the view at the time of the transfer.

Example 3. Stacking rules. (i) In Year 1, P buys all the stock of T for $100, and T becomes a member of the P group. T has an asset with a basis of $0 and a value of $100. T sells the asset for $100. Under the investment adjustment system, P's basis in the T stock increases from $100 to $200. In Year 5, when the value of the T stock remains $100, P transfers to T an asset with a basis of $0 and a value of $100 in a transaction to which section 351 applies, with the view described in paragraph (e)(2)(i) of this section. Thereafter, the value of the contributed asset declines to $10. In Year 6, P sells all the T stock for $110 and recognizes a $90 loss.

(ii) Because the transferred asset declined in value by $90, the transfer enabled P to avoid the disallowance of loss by the sale of T only to the extent of $10. Under paragraph

(e)(2)(ii) of this section, P must reduce the basis in its T stock immediately before the sale to cause recognition of gain in an amount equal to the loss disallowance otherwise avoided by reason of the transfer. The amount of this basis reduction is $100, causing a $10 gain to be recognized on the sale.

(iii) The facts are the same as in (i) of this *Example*, except that the transferred asset does not decline in value and that T reinvests the $100 in proceeds from the asset sale in another asset that appreciates in value to $190. In Year 6, P sells T for $290. Because the new asset appreciated in value by $90, the transfer enabled P to avoid the disallowance of loss on the sale of T only to the extent of $10. Under paragraph (e)(2)(ii) of this section, P must reduce the basis in its T stock immediately before the sale to cause recognition of gain in an amount equal to the loss disallowance otherwise avoided by reason of the transfer. The amount of this basis reduction is $10, causing a $100 gain to be recognized on the sale.

Example 4. Contribution of built-in loss asset. (i) In Year 1, P forms S with a contribution of $100 in exchange for all of S's stock, and S becomes a member of the P group. S buys an asset for $100, and the asset appreciates in value to $200. P then buys all the stock of T for $100, and T becomes a member of the P group. T has an asset with a basis of $0 and a value of $100. T sells the asset for $100, and under the investment adjustment system P's basis in the T stock increases from $100 to $200. In Year 5, when the value of the T stock remains $100, P transfers the T stock to S in a transaction to which section 351 applies, with the view described in paragraph (e)(2)(i) of this section. The transfer causes P's basis in the S stock to increase from $100 to $300 and the value of S to increase from $200 to $300. In Year 6, P sells the S stock for $300.

(ii) Under paragraph (e)(2)(ii) of this section, P must reduce the basis in its S stock immediately before the sale to cause recognition of gain in an amount equal to the gain recognition otherwise avoided by reason of the transfer. The amount of this basis reduction is $100, causing a $100 gain to be recognized on the sale.

Example 5. Absence of a view. (i) In Year 1, P buys all the stock of T for $100, and T becomes a member of the P group. T has 2 historic assets, asset 1 with a basis of $40 and value of $90, and asset 2 with a basis of $60 and value of $10. In Year 2, T sells asset 1 for $90. Under the investment adjustment system, P's basis in the T stock increases from $100 to $150. Asset 2 is not essential to the operation of T's business, and T distributes asset 2 to P in Year 5 with a view to having the group retain its $50 loss inherent in the asset. Under §1.1502–13(f)(2), and the application of the principles of this rule in section 267(f), T has a $50 intercompany loss that is deferred. Under §1.1502–32(b)(3)(iv), the distribution reduces P's basis in the T stock by $10 to $140 in Year 5. In Year 6, P sells all the T stock for $90. Under the acceleration rule of §1.1502–13(d), and the application of the principles of this rule in section 267(f), T's intercompany loss is ordinarily taken into account immediately before P's sale of the T stock. Assuming that the loss is absorbed by the group, P's basis in T's stock would be reduced from $140 to $90 under §1.1502–32(b)(3)(i), and there would be no gain or loss from the stock disposition. (Alternatively, if the loss is not absorbed and the loss is reattributed to P under paragraph (g) of this section, the reattribution would reduce P's basis in T's stock from $140 to $90.)

(ii) A $50 loss is reflected both in T's basis in asset 2 and in P's basis in the T stock. Because the distribution results in the loss with respect to asset 2 being taken into account before the corresponding loss reflected in the T stock, and asset 2 is an historic asset of T, the distribution is not with the view described in paragraph (e)(2) of this section.

Example 6. Extending the time period for dispositions. (i) In Year 1, P buys all the stock of T for $100, and T becomes a member of the P group. T has an asset with a basis of $0 and a value of $100. T sells the asset for $100. Under the investment adjustment system, P's basis in the T stock increases from $100 to $200. At the beginning of Year 5, P transfers to T an asset with a basis of $0 and a value of $100 in a transaction to which section 351 applies, with the view described in paragraph (e)(2)(i) of this section. Within 2 years, P agrees to sell all the stock of T for $200 at the end of Year 7.

(ii) Under paragraph (e)(2) (i) of this section, P's disposition of the T stock at the end of Year 7 is treated as occurring within the 2-year period following P's transfer of the asset to T, because the disposition is pursuant to an agreement reached within 2 years after the transfer. Accordingly, under paragraph (e)(2)(ii) of this section, P must reduce the basis in its T stock by $100 immediately before the sale. This result is reached whether or not the agreement is in writing. P's disposition would also have been treated as occurring within the 2-year period if the disposition were pursuant to an option issued within the period.

(f) *No tiering up of certain adjustments*—(1) *General rule.* If the basis of stock of a subsidiary (S) owned by a another member (P) is reduced under this section on the deconsolidation of the S stock, no corresponding adjustment is made under §1.1502–32 to the basis of the stock of P if there is a disposition or deconsolidation of the P stock in the same transaction. If there is a disposition or deconsolidation in

the same transaction of less than all the stock of P, appropriate adjustments must be made under §1.1502–32 with respect to P (and any higher-tier members).

(2) *Example*. The principles of this paragraph (f) are illustrated by the following example.

Example. (i) P, the common parent of a group, owns all the stock of S, S owns all the stock of S1, and S1 owns all the stock of S2. P's basis in the S stock is $100, S's basis in the S1 stock is $100, and S1's basis in the S2 stock is $100. In Year 1, S2 buys all the stock of T for $100. T has an asset with a basis of $0 and a value of $100. In Year 2, T sells the asset for $100. Under the investment adjustment system, the basis of each subsidiary's stock increases from $100 to $200. In Year 6, S sells all the stock of S1 for $100 to A, an individual, and recognizes a loss of $100. S1, S2, and T are not members of a consolidated group immediately after the sale because the new S1 group does not file a consolidated return for its first tax year.

(ii) Under paragraph (a)(1) of this section, no deduction is allowed to S for its loss from the sale of the S1 stock. Under §1.1502–32(b)(3)(iii), S's disallowed loss is treated as a noncapital, nondeductible expense for Year 6 that reduces P's basis in the S stock. (Under §1.1502–33, S's earnings and profits for Year 6 are reduced by the amount of S's disallowed loss for earnings and profits purposes and, under §1.1502–33(b), this reduction is reflected in P's earnings and profits.)

(iii) Under paragraphs (b)(1) and (f)(1) of this section, because the stock of T and S2 are deconsolidated as a result of S's sale of the S1 stock, the basis of their stock must be reduced immediately before the sale from $200 to $100 (the value immediately before the deconsolidation). Under §1.1502–32(b)(3)(iii), the basis reductions are treated as noncapital, nondeductible expenses for Year 6. Under paragraph (f)(2) of this section, however, because the S2 stock is deconsolidated in the same transaction, the basis reduction to the T stock does not tier up under §1.1502–32(a)(3). Similarly, because the S1 stock is disposed of in the same transaction, the basis reduction to the S2 stock also does not tier up. (Comparable treatment applies for purposes of earnings and profits under §1.1502–33.)

(g) *Reattribution of subsidiary's losses to common parent*—(1) *Reattribution rule*. If a member disposes of stock of a subsidiary and the member's loss would be disallowed under paragraph (a)(1) of this section, the common parent may make an irrevocable election to reattribute to itself any portion of the net operating loss carryovers and net capital loss carryovers attributable to the subsidiary (and any lower tier subsidiary) without regard to the order in which they were incurred. The amount reattributed may not exceed the amount of loss that would be disallowed if no election is made under this paragraph (g). For this purpose, the amount of loss that would be disallowed is determined by applying paragraph (c)(1) of this section (without taking into account the requirement under paragraph (c)(3) of this section that a statement be filed) and by not taking the reattribution into account. The amount of loss that would be disallowed and the losses that may be reattributed are determined immediately after the disposition, but the reattribution is deemed to be made immediately before the disposition. The common parent succeeds to the reattributed losses as if the losses were succeeded to in a transaction described in section 381(a). Any owner shift of the subsidiary (including any deemed owner shift resulting from section 382(g)(4)(D) or 382(l)(3)) in connection with the disposition is not taken into account under section 382 with respect to the reattributed losses. See §1.1502–96(d) for rules relating to section 382 and the reattribution of losses under this paragraph (g).

(2) *Insolvency limitation*. If the subsidiary whose losses are to be reattributed, or any higher tier subsidiary, is insolvent within the meaning of section 108(d)(3) at the time of the disposition, losses of the subsidiary may be reattributed only to the extent they exceed the sum of the separate insolvencies of any subsidiaries (taking into account only the subsidiary and its higher tier subsidiaries) that are insolvent. For purposes of determining insolvency, liabilities owed to higher tier members are not taken into account, and stock of a subsidiary that is limited and preferred as to dividends and that is not owned by higher tier members is treated as a liability to the extent of the amount of preferred distributions to which the stock would be entitled if the subsidiary were liquidated on the date of the disposition.

(3) *Examples*. The principles of this paragraph (g) are illustrated by the following examples.

Example 1. Basic reattribution case. (i) P, the common parent of a group, forms S with a $100 contribution. For Year 1, S has a $60 operating loss that is not absorbed and is included in the group's consolidated net operating loss that is carried over under §§1.1502–21A or 1.1502–21. Under §1.1502–32(b)(3)(i), P's basis in the S stock is not reduced to reflect S's loss because the loss is not absorbed. Under §1.1502–33(b), S's deficit in earnings and profits is reflected in P's earnings and profits even though the loss is not absorbed for tax purposes. During Year 2, S's remaining assets appreciate in value and P sells the S stock for $55. But for an election to reattribute losses under paragraph (g) of this section, P would have a $45 loss from the sale that would be disallowed.

(ii) P elects under paragraph (g)(1) of this section to reattribute to itself $45 of S's losses (the maximum amount permitted). As a result, $45 of the $60 net operating loss carryover attributable to S is reattributed to P. This reattributed loss may be included in the net operating loss carryover to subsequent consolidated return years of the P group. P succeeds to these losses as if the losses were succeeded to in a transaction described in section 381(a) and they retain their character as ordinary losses. The remaining $15 of net operating loss carryover attributable to S is carried over to the first separate return year of S.

(iii) Under §1.1502–32(b)(3)(iii), the reattribution of $45 of loss is a noncapital, nondeductible expense that reduces P's basis in the S stock from $100 to $55 immediately before the disposition. Consequently, P does not recognize any gain or loss from the disposition.

(iv) Assume that $20 of S's losses arose in Year 1 and $40 in Year 2, and that P elects to reattribute all $40 from Year 2 and $5 from Year 1. P succeeds to these losses as if the losses were succeeded to in a transaction described in section 381(a), and the losses retain their character as ordinary losses arising in Years 1 and 2. The losses continue to be subject to any limitations originally applicable to S, but P succeeds to them and may absorb the losses independently of S. (For example, P's use of the Year 2 losses does not depend on S's use of the Year 1 losses that were not reattributed to P.)

Example 2. Lower tier subsidiary. (i) P, the common parent of a group, forms S with a $100 contribution. S then forms T with a $40 contribution and T borrows $60. For Year 1, S has a $30 operating loss and T has a $55 operating loss. The losses are not absorbed and are included in the group's consolidated net operating loss that is carried over under §§1.1502–21A or 1.1502–21. Under §1.1502–32(b)(3)(i), P's basis in the S stock, and S's basis in the T stock, are not reduced to reflect the S and T losses because the group is unable to absorb the losses. (Under §1.1502–33(b), the deficits in earnings and profits of S and T are tiered up for earnings and profits purposes even though not absorbed for tax purposes.) During Year 2, P sells the S stock for $30 ($100 invested, minus S's $30 loss and $40 unrealized loss from its investment in the T stock). But for an election to reattribute losses under paragraph (g) of this section, P would have a $70 loss from the sale, which would be disallowed.

(ii) S's $30 portion of the net operating loss carryover may be reattributed to P under paragraph (g)(1) of this section. Because T is insolvent by $15, paragraph (g)(2) of this section provides that only $40 of its $55 portion of the net operating loss carryover may be reattributed to P under paragraph (g)(1) of this section. There is no limitation, however, on which $40 of T's $55 loss may be reattributed.

(iii) P elects under paragraph (g)(1) of this section to reattribute to itself $40 of T's losses (the maximum amount permitted). P does not elect, however, to reattribute to itself any of S's losses. As a result, $40 of the $85 net operating loss carryover is reattributed to P. This reattributed loss may be included in the net operating loss carryover to subsequent consolidated return years of the P group. Of the $45 remaining net operating loss carryover, the $15 attributable to T and $30 attributable to S are carried over to their first separate return years.

(iv) Under §1.1502–32(b)(3)(iii), the reattribution of loss is a noncapital, nondeductible expense that reduces P's basis in the S stock to $60 immediately before the disposition. Consequently, P recognizes only a $30 loss from the disposition of its S stock ($30 sale proceeds and $60 basis), and this loss is disallowed.

Example 3. Separate return limitation year losses. (i) P, the common parent of a group, buys the stock of S for $100. S has a net operating loss carryover of $40 from a separate return limitation year, and assets with a value and basis of $100. The assets of S decline in value by $40, and P sells all the stock of S for $60. But for an election to reattribute losses under this paragraph (g), P would have a $40 loss on the sale of S that would be disallowed.

(ii) S's $40 loss carryover from a separate return limitation year may be reattributed to P under paragraph (g)(1) of this section.

(iii) P elects under paragraph (g)(1) of this section to reattribute to itself S's $40 (loss the maximum amount permitted). Following the reattribution, the loss is included in the net operating loss carryover to subsequent consolidated return years of the P group.

(iv) Under §1.1502–32(b)(3)(iii), the reattribution of loss is a noncapital, nondeductible expense that reduces P's basis in the S stock to $60 immediately before the disposition. Consequently, P recognizes no gain or loss from the disposition of its S stock. For P's treatment of the $40 reattributed loss, see §1.1502–1(f).

(4) *Time and manner of making the election*—(i) *In general.* The election described in paragraph (g)(1) of this section must be made in a separate statement entitled ''this is an election under §1.1502–20(g)(1) To reattribute losses of [insert names and employer identification numbers (E.I.N.) of each subsidiary whose losses are reattributed] to [insert name and employer identification number of common parent].'' The statement must include the following information—

(A) For each subsidiary, the amount of each net operating loss and net capital loss, and the year in which each arose, that is reattributed to the common parent;

(B) If a subsidiary ceases to be a member, the name and employer identification number of the person acquiring the subsidiary's stock; and

(C) If the common parent is reattributing to itself all or any part of a section 382 limitation pursuant to §1.1502–96(d)(5), the information required by paragraph (g)(4)(ii) of this section.

The statement must be signed by the common parent, and by each subsidiary with respect to which loss is reattributed under this paragraph (g) that does not remain a member of the common parent's group immediately following the disposition. The statement must be filed with the group's income tax return for the tax year of the disposition and a copy of the statement must be retained by the subsidiary. If the acquirer is a subsidiary in a consolidated group, the name and employer identification number of the common parent of the group must be included in the statement, and a copy of the statement must also be delivered to the common parent.

(ii) *Reattribution of section 382 limitation.* The information required by this paragraph (g)(4)(ii) is a separate list for each subsidiary (or a separate list for two or more subsidiaries that are members of a loss subgroup whose prechange subgroup losses are being reattributed) with respect to which an apportionment of a separate section 382 limitation or subgroup section 382 limitation is being made, setting forth—

(A) The name and E.I.N. of the subsidiary (or subsidiaries that were members of a loss subgroup);

(B) A statement entitled ''THIS IS AN ELECTION UNDER §1.1502–96(d)(5) TO APPORTION ALL OR PART OF [insert A SEPARATE or A SUBGROUP or BOTH A SEPARATE AND A SUBGROUP] SECTION 382 LIMITATION TO [insert name and E.I.N. of the common parent]'';

(C) The date of the ownership change giving rise to the separate section 382 limitation or subgroup section 382 limitation that is being apportioned;

(D) The amount of the separate (or subgroup) section 382 limitation for the taxable year in which the reattribution occurs (determined without reference to any apportionment under this section or §1.1502–95(c));

(E) The amount of each net operating loss carryover or capital loss carryover, and the year in which it arose, of the subsidiary (or subsidiaries) that is subject to the separate section 382 limitation or subgroup section 382 limitation that is being apportioned to the common parent, and the amount of the value element and adjustment element of that limitation that is apportioned to the common parent.

(iii) *Filing of subsidiary's copy of statement.* The subsidiary whose losses are reattributed (or the common parent of any consolidated group that acquires the subsidiary or lower tier subsidiary) must attach its copy of the statement described in paragraph (g)(5)(i) of this section to its income return for the first tax year ending after the due date, including extensions, of the return in which the election required by paragraph (g)(5)(i) of this section is to be filed.

(h) *Effective dates*—(1) *General rule.* Except as otherwise provided in this paragraph (h), this section applies with respect to dispositions and deconsolidations on or after February 1, 1991. For this purpose, dispositions deferred under §1.1502–13 are deemed to occur at the time the deferred gain or loss is taken into account unless the

stock was deconsolidated before February 1, 1991. If stock of a subsidiary became worthless during a taxable year including February 1, 1991, the disposition with respect to the stock is treated as occurring on the date the stock became worthless.

(2) *Election to accelerate effective date*—(i) *In general.* A group may make an irrevocable election to apply this section to all its members, instead of §1.337(d)–2, with respect to all dispositions and deconsolidations on or after November 19, 1990.

(ii) *Time and manner of making the election—in general.* The election described in paragraph (h)(2)(i) of this section must be made in a separate statement entitled ''this is an election under §1.1502–20(h)(2) to accelerate the application of §1.1502–20 to the consolidated group of which [insert name and employer identification number of common parent] is the common parent.'' The statement must be signed by the common parent and filed with the group's income tax return for the tax year of the first disposition or deconsolidation to which the election applies. If the separate statement required under this paragraph (h) (2) (ii) is to be filed with a return the due date (including extensions) of which is before April 16, 1991, the statement may be filed with an amended return for the year of the disposition or deconsolidation. Any other filings required under this §1.1502–20, such as the statement required under §1.1502–20(c)(3), which ordinarily cannot be made with an amended return, must be made at such time and in such manner as permitted by the Commissioner.

(3) *Binding contract rule.* For purposes of this paragraph (h), if a disposition or deconsolidation is pursuant to a binding written contract entered into before March 9, 1990, and in continuous effect until the disposition or deconsolidation, the date the contract became binding is treated as the date of the disposition or deconsolidation.

(4) *Application of §1.1502–20T to certain transactions*—(i) *In general.* If a group files the certification described in paragraph (h)(4)(ii) of this section, it may apply §1.1502–20T (as contained in the CFR edition revised as of April 1, 1990), to all of its members with respect to all dispositions and deconsolidations by the certifying group to which §1.1502–20T otherwise applied by its terms occurring—

(A) On or after March 9, 1990 (but only if not pursuant to a binding contract described in §1.337(d)–1T(e)(2) (as contained in the CFR edition revised as of April 1, 1990) that was entered into before March 9, 1990); and

(B) Before November 19, 1990 (or thereafter, if pursuant to a binding contract described in §1.1502–20T(g)(3) that was entered into on or after March 9, 1990 and before November 19, 1990).

The certification under this paragraph (h)(4)(i) with respect to the application of §1.1502–20T to any transaction described in this paragraph (h)(4)(i) may not be withdrawn and, if the certification is filed, §1.1502–20T must be applied to all such transactions on all returns (including amended returns) on which such transactions are included.

(ii) *Time and manner of filing certification.* The certification described in paragraph (h)(4)(i) of this section must be made in a separate statement entitled ''[insert name and employer identification number of common parent] hereby certifies under §1.1502–20 (h)(4) that the group of which it is the common parent is applying §1.1502–20T to all transactions to which that section otherwise applied by its terms.'' The statement must be signed by the common parent and filed with the group's income tax return for the taxable year of the first disposition or deconsolidation to which the certification applies. If the separate statement required under this paragraph (h)(4) is to be filed with a return the due date (including extensions) of which is before November 16, 1991, the statement may be filed with an amended return for the year of the disposition or deconsolidation that is filed within 180 days after September 13, 1991. Any other filings required under §1.1502–20T, such as the statement required under §1.1502–20T(f)(5), may be made with the amended return, regardless of whether §1.1502–20T permits such filing by amended return.

(5) *Cross reference*. For transitional loss limitation rules, see §§1.337(d)–1 and 1.337(d)–2.

[T.D. 8364, 56 FR 47392, Sept. 19, 1991; 57 FR 53550, Nov. 12, 1992, as amended by T.D. 8560, 59 FR 41680, Aug. 15, 1994; T.D. 8597, 60 FR 36709, July 18, 1995; T.D. 8677, 61 FR 33323, June 27, 1996; T.D. 8597, 62 FR 12098, Mar. 14, 1997; T.D. 8823, 64 FR 36099, July 2, 1999; T.D. 8824, 64 FR 36127, July 2, 1999]

COMPUTATION OF CONSOLIDATED ITEMS

§ 1.1502–21 Net operating losses.

(a) *Consolidated net operating loss deduction*. The consolidated net operating loss deduction (or CNOL deduction) for any consolidated return year is the aggregate of the net operating loss carryovers and carrybacks to the year. The net operating loss carryovers and carrybacks consist of—

(1) Any CNOLs (as defined in paragraph (e) of this section) of the consolidated group; and

(2) Any net operating losses of the members arising in separate return years.

(b) *Net operating loss carryovers and carrybacks to consolidated return and separate return years*. Net operating losses of members arising during a consolidated return year are taken into account in determining the group's CNOL under paragraph (e) of this section for that year. Losses taken into account in determining the CNOL may be carried to other taxable years (whether consolidated or separate) only under this paragraph (b).

(1) *Carryovers and carrybacks generally*. The net operating loss carryovers and carrybacks to a taxable year are determined under the principles of section 172 and this section. Thus, losses permitted to be absorbed in a consolidated return year generally are absorbed in the order of the taxable years in which they arose, and losses carried from taxable years ending on the same date, and which are available to offset consolidated taxable income for the year, generally are absorbed on a pro rata basis. Additional rules provided under the Internal Revenue Code or regulations also apply. See, e.g., section 382(l)(2)(B) (if losses are carried from the same taxable year, losses subject to limitation under section 382 are absorbed before losses that are not subject to limitation under section 382). See *Example 2* of paragraph (c)(1)(iii) of this section for an illustration of pro rata absorption of losses subject to a SRLY limitation.

(2) *Carryovers and carrybacks of CNOLs to separate return years*—(i) *In general*. If any CNOL that is attributable to a member may be carried to a separate return year of the member, the amount of the CNOL that is attributable to the member is apportioned to the member (apportioned loss) and carried to the separate return year. If carried back to a separate return year, the apportioned loss may not be carried back to an equivalent, or earlier, consolidated return year of the group; if carried over to a separate return year, the apportioned loss may not be carried over to an equivalent, or later, consolidated return year of the group. For rules permitting the reattribution of losses of a subsidiary to the common parent when loss is disallowed on the disposition of subsidiary stock, see §1.1502–20(g).

(ii) *Special rules*—(A) *Year of departure from group*. If a corporation ceases to be a member during a consolidated return year, net operating loss carryovers attributable to the corporation are first carried to the consolidated return year, and only the amount so attributable that is not absorbed by the group in that year is carried to the corporation's first separate return year. For rules concerning a member departing a subgroup, see paragraph (c)(2)(vii) of this section.

(B) *Offspring rule*. In the case of a member that has been a member continuously since its organization (determined without regard to whether the member is a successor to any other corporation), the CNOL attributable to the member is included in the carrybacks to consolidated return years before the member's existence. If the group did not file a consolidated return for a carryback year, the loss may be carried back to a separate return year of the common parent under paragraph (b)(2)(i) of this section, but only if the common parent was not a member of a different consolidated group or of an affiliated group filing separate returns for the year to which the loss is carried or any subsequent year in the

carryback period. Following an acquisition described in §1.1502–75(d)(2) or (3), references to the common parent are to the corporation that was the common parent immediately before the acquisition.

(iii) *Equivalent years.* Taxable years are equivalent if they bear the same numerical relationship to the consolidated return year in which a CNOL arises, counting forward or backward from the year of the loss. For example, in the case of a member's third taxable year (which was a separate return year) that preceded the consolidated return year in which the loss arose, the equivalent year is the third consolidated return year preceding the consolidated return year in which the loss arose. See paragraph (b)(3)(iii) of this section for certain short taxable years that are disregarded in making this determination.

(iv) *Amount of CNOL attributable to a member.* The amount of a CNOL that is attributable to a member is determined by a fraction the numerator of which is the separate net operating loss of the member for the year of the loss and the denominator of which is the sum of the separate net operating losses for that year of all members having such losses. For this purpose, the separate net operating loss of a member is determined by computing the CNOL by reference to only the member's items of income, gain, deduction, and loss, including the member's losses and deductions actually absorbed by the group in the taxable year (whether or not absorbed by the member).

(v) *Examples.* For purposes of the examples in this section, unless otherwise stated, all groups file consolidated returns, all corporations have calendar taxable years, the facts set forth the only corporate activity, value means fair market value and the adjusted basis of each asset equals its value, all transactions are with unrelated persons, and the application of any limitation or threshold under section 382 is disregarded. The principles of this paragraph (b)(2) are illustrated by the following examples:

Example 1. Offspring rule. (i) During Year 1, Individual A forms P and T, and they each file a separate return. P forms S on March 15 of Year 2, and P and S file a consolidated return. P acquires all the stock of T from Individual A at the beginning of Year 3, and T becomes a member of the P group. P's acquisition of T is not an ownership change within the meaning of section 382. P, S, and T sustain a $1,100 CNOL in Year 3 and, under paragraph (b)(2)(iv) of this section, the loss is attributable $200 to P, $300 to S, and $600 to T.

(ii) Of the $1,100 CNOL in Year 3, the $500 amount of the CNOL that is attributable to P and S ($200 + $300) may be carried to P's separate return in Year 1. Even though S was not in existence in Year 1, the $300 amount of the CNOL attributable to S may be carried back to P's separate return in Year 1 because S (unlike T) has been a member of the P group since its organization and P is a qualified parent under paragraph (b)(2)(ii)(B) of this section. To the extent not absorbed in that year, the loss may then be carried to the P group's return in Year 2. The $600 amount of the CNOL attributable to T is a net operating loss carryback to T's separate return in Year 1, and if not absorbed in Year 1, then to Year 2.

Example 2. Departing members. (i) The facts are the same as in *Example 1.* In addition, on June 15 of Year 4, P sells all the stock of T. The P group's consolidated return for Year 4 includes the income of T through June 15. T files a separate return for the period from June 16 through December 31.

(ii) $600 of the Year 3 CNOL attributable to T is apportioned to T and is carried back to its separate return in Year 1. To the extent the $600 is not absorbed in T's separate return in Year 1 or Year 2, it is carried to the consolidated return in Year 4 before being carried to T's separate return in Year 4. Any portion of the loss not absorbed in T's Year 1 or Year 2 or in the P group's Year 4 is then carried to T's separate return in Year 4.

Example 3. Offspring rule following acquisition. (i) Individual A owns all of the stock of P, the common parent of a consolidated group. In Year 1, B, an individual unrelated to Individual A, forms T. P acquires all of the stock of T at the beginning of Year 3, and T becomes a member of the P group. The P group has $200 of consolidated taxable income in Year 2, and $300 of consolidated taxable income in Year 3 (computed without regard to the CNOL deduction). At the beginning of Year 4, T forms a subsidiary, Y, in a transaction described in section 351. The P group has a $300 consolidated net operating loss in Year 4, and under paragraph (b)(2)(iv) of this section, the loss is attributable entirely to Y.

(ii) Even though Y was not in existence in Year 2, $300, the amount of the consolidated net operating loss attributable to Y, may be carried back to the P group's Year 2 consolidated return under paragraph (b)(2)(ii)(B) of this section because Y has been a member of the P group since its organization. To the extent not absorbed in that year, the loss may

then be carried to the P group's consolidated return in Year 3.

(3) *Special rules*—(i) *Election to relinquish carryback.* A group may make an irrevocable election under section 172(b)(3) to relinquish the entire carryback period with respect to a CNOL for any consolidated return year. Except as provided in paragraph (b)(3)(ii)(B) of this section, the election may not be made separately for any member (whether or not it remains a member), and must be made in a separate statement entitled ''THIS IS AN ELECTION UNDER SECTION 1.1502–21(b)(3)(i) TO WAIVE THE ENTIRE CARRYBACK PERIOD PURSUANT TO SECTION 172(b)(3) FOR THE [insert consolidated return year] CNOLs OF THE CONSOLIDATED GROUP OF WHICH [insert name and employer identification number of common parent] IS THE COMMON PARENT.'' The statement must be signed by the common parent and filed with the group's income tax return for the consolidated return year in which the loss arises.

(ii) *Special elections*—(A) *Groups that include insolvent financial institutions.* For rules applicable to relinquishing the entire carryback period with respect to losses attributable to insolvent financial institutions, see § 301.6402–7 of this chapter.

(B) *Acquisition of member from another consolidated group.* If one or more members of a consolidated group becomes a member of another consolidated group, the acquiring group may make an irrevocable election to relinquish, with respect to all consolidated net operating losses attributable to the member, the portion of the carryback period for which the corporation was a member of another group, provided that any other corporation joining the acquiring group that was affiliated with the member immediately before it joined the acquiring group is also included in the waiver. This election is not a yearly election and applies to all losses that would otherwise be subject to a carryback to a former group under section 172. The election must be made in a separate statement entitled ''THIS IS AN ELECTION UNDER SECTION 1.1502–21(b)(3)(ii)(B) TO WAIVE THE PRE-[insert first taxable year for which the member (or members) was not a member of another group] CARRYBACK PERIOD FOR THE CNOLs attributable to [insert names and employer identification number of members].'' The statement must be filed with the acquiring consolidated group's original income tax return for the year the corporation (or corporations) became a member, and it must be signed by the common parent and each of the members to which it applies.

(iii) *Short years in connection with transactions to which section 381(a) applies.* If a member distributes or transfers assets to a corporation that is a member immediately after the distribution or transfer in a transaction to which section 381(a) applies, the transaction does not cause the distributor or transferor to have a short year within the consolidated return year of the group in which the transaction occurred that is counted as a separate year for purposes of determining the years to which a net operating loss may be carried.

(iv) *Special status losses.* [Reserved]

(c) *Limitations on net operating loss carryovers and carrybacks from separate return limitation years*—(1) *SRLY limitation*—(i) *General rule.* Except as provided in paragraph (g) of this section (relating to an overlap with section 382), the aggregate of the net operating loss carryovers and carrybacks of a member arising (or treated as arising) in SRLYs that are included in the CNOL deductions for all consolidated return years of the group under paragraph (a) of this section may not exceed the aggregate consolidated taxable income for all consolidated return years of the group determined by reference to only the member's items of income, gain, deduction, and loss. For this purpose—

(A) Consolidated taxable income is computed without regard to CNOL deductions;

(B) Consolidated taxable income takes into account the member's losses and deductions (including capital losses) actually absorbed by the group in consolidated return years (whether or not absorbed by the member);

(C) In computing consolidated taxable income, the consolidated return years of the group include only those

years, including the year to which the loss is carried, that the member has been continuously included in the group's consolidated return, but exclude—

(*1*) For carryovers, any years ending after the year to which the loss is carried; and

(*2*) For carrybacks, any years ending after the year in which the loss arose; and

(D) The treatment under § 1.1502–15 of a built-in loss as a hypothetical net operating loss carryover in the year recognized is solely for purposes of determining the limitation under this paragraph (c) with respect to the loss in that year and not for any other purpose. Thus, for purposes of determining consolidated taxable income for any other losses, a built-in loss allowed under this section in the year it arises is taken into account.

(ii) *Losses treated as arising in SRLYs.* If a net operating loss carryover or carryback did not arise in a SRLY but is attributable to a built-in loss (as defined under § 1.1502–15), the carryover or carryback is treated for purposes of this paragraph (c) as arising in a SRLY if the built-in loss was not allowed, after application of the SRLY limitation, in the year it arose. For an illustration, see § 1.1502–15(d), *Example 5*. But see § 1.1502–15(g)(1).

(iii) *Examples.* The principles of this paragraph (c)(1) are illustrated by the following examples:

Example 1. Determination of SRLY limitation. (i) Individual A owns P. In Year 1, Individual A forms T, and T sustains a $100 net operating loss that is carried forward. P acquires all the stock of T at the beginning of Year 2, and T becomes a member of the P group. The P group has $300 of consolidated taxable income in Year 2 (computed without regard to the CNOL deduction). Such consolidated taxable income would be $70 if determined by reference to only T's items.

(ii) T's $100 net operating loss carryover from Year 1 arose in a SRLY. See § 1.1502–1(f)(2)(iii). P's acquisition of T was not an ownership change as defined by section 382(g). Thus, the $100 net operating loss carryover is subject to the SRLY limitation in paragraph (c)(1) of this section. The SRLY limitation for Year 2 is consolidated taxable income determined by reference to only T's items, or $70. Thus, $70 of the loss is included under paragraph (a) of this section in the P group's CNOL deduction for Year 2.

(iii) The facts are the same as in paragraph (i) of this *Example 1*, except that such consolidated taxable income (computed without regard to the CNOL deduction and by reference to only T's items) for Year 2 is a loss (a CNOL) of $370. Because the SRLY limitation may not exceed the consolidated taxable income determined by reference to only T's items, and such items aggregate to a CNOL, T's $100 net operating loss carryover from Year 1 is not allowed under the SRLY limitation in Year 2. Moreover, if consolidated taxable income (computed without regard to the CNOL deduction and by reference to only T's items) did not exceed $370 in Year 3, the carryover would still be restricted under paragraph (c) of this section in Year 3, because the aggregate consolidated taxable income for all consolidated return years of the group computed by reference to only T's items would not be a positive amount.

Example 2. Net operating loss carryovers. (i) In Year 1, Individual A forms P, and P sustains a $40 net operating loss that is carried forward. P has no income in Year 2. Individual A also owns T which sustains a net operating loss of $50 in Year 2 that is carried forward. P acquires the stock of T from Individual A during Year 3, but T is not a member of the P group for each day of the year. P and T file separate returns and sustain net operating losses of $120 and $60, respectively, for Year 3. The P group files consolidated returns beginning in Year 4. During Year 4, the P group has $160 of consolidated taxable income (computed without regard to the CNOL deduction). Such consolidated taxable income would be $70 if determined by reference to only T's items. These results are summarized as follows:

	Separate	Separate	Separate/affiliated	Consolidated
	Year 1	Year 2	Year 3	Year 4
P	$ (40)	$0	$ (120)	$90
T	0	(50)	(60)	70
CTI				160

(ii) P's Year 1, Year 2, and Year 3 are not SRLYs with respect to the P group. See § 1.1502–1(f)(2)(i). Thus, P's $40 net operating loss arising in Year 1 and $120 net operating loss arising in Year 3 are not subject to the SRLY limitation under paragraph (c) of this section. Under the principles of section 172, paragraph (b) of this section requires that the loss arising in Year 1 be the first loss absorbed by the P group in Year 4. Absorption of this loss leaves $120 of the group's consolidated taxable income available for offset by other loss carryovers.

(iii) T's Year 2 and Year 3 are SRLYs with respect to the P group. See § 1.1502–1(f)(2)(ii). P's acquisition of T was not an ownership change as defined by section 382(g). Thus, T's $50 net operating loss arising in Year 2 and $60 net operating loss arising in Year 3 are subject to the SRLY limitation. Under paragraph (c)(1) of this section, the SRLY limitation for Year 4 is $70, and under paragraph (b) of this section, T's $50 loss from Year 2 must be included under paragraph (a) of this section in the P group's CNOL deduction for Year 4. The absorption of this loss leaves $70 of the group's consolidated taxable income available for offset by other loss carryovers.

(iv) P and T each carry over net operating losses to Year 4 from a taxable year ending on the same date (Year 3). The losses carried over from Year 3 total $180. Under paragraph (b) of this section, the losses carried over from Year 3 are absorbed on a pro rata basis, even though one arises in a SRLY and the other does not. However, the group cannot absorb more than $20 of T's $60 net operating loss arising in Year 3 because its $70 SRLY limitation for Year 4 is reduced by T's $50 Year 2 SRLY loss already included in the CNOL deduction for Year 4. Thus, the absorption of Year 3 losses is as follows:

Amount of P's Year 3 losses absorbed = $120/($120 + $20) × $70 = $60.

Amount of T's Year 3 losses absorbed = $20/($120 + $20) × $70 = $10.

(v) The absorption of $10 of T's Year 3 loss further reduces T's SRLY limitation to $10 ($70 of initial SRLY limitation, reduced by the $60 net operating loss already included in the CNOL deductions for Year 4 under paragraph (a) of this section).

(vi) P carries its remaining $60 Year 3 net operating loss and T carries its remaining $50 Year 3 net operating loss over to Year 5. Assume that, in Year 5, the P group has $90 of consolidated taxable income (computed without regard to the CNOL deduction). The group's CTI determined by reference to only T's items is a CNOL of $4. For Year 5, the CNOL deduction is $66, which includes $60 of P's Year 3 loss and $6 of T's Year 3 loss (the aggregate consolidated taxable income for Years 4 and 5 determined by reference to T's items, or $66, reduced by T's SRLY losses actually absorbed by the group in Year 4, or $60).

Example 3. Net operating loss carrybacks. (i) P owns all of the stock of S and T. The members of the P group contribute the following to the consolidated taxable income of the P group for Years 1, 2, and 3:

	Year 1	Year 2	Year 3	Total
P	$100	$60	$80	$240
S	20	20	30	70
T	30	10	(50)	(10)
CTI	150	90	60	300

(ii) P sells all of the stock of T to Individual A at the beginning of Year 4. For its Year 4 separate return year, T has a net operating loss of $30.

(iii) T's Year 4 is a SRLY with respect to the P group. See § 1.1502–1(f)(1). T's $30 net operating loss carryback to the P group from Year 4 is not allowed under paragraph (c) of this section to be included in the CNOL deduction under paragraph (a) of this section for Year 1, 2, or 3, because the P group's consolidated taxable income would not be a positive amount if determined by reference to only T's items for all consolidated return years through Year 4 (without regard to the $30 net operating loss). The $30 loss is carried forward to T's Year 5 and succeeding taxable years as provided under the Internal Revenue Code.

Example 4. Computation of SRLY limitation for built-in losses treated as net operating loss carryovers. (i) Individual A owns P. In Year 1, Individual A forms T by contributing $300 and T sustains a $100 net operating loss. During Year 2, T's assets decline in value by $100. At the beginning of Year 3, P acquires all the stock of T from Individual A, and T becomes a member of the P group in a transaction that does not result in an ownership change under section 382(g). At the time of the acquisition, T has a $100 net unrealized built-in loss, which exceeds the threshold requirements of section 382(h)(3)(B). During Year 3, T recognizes its unrealized loss as a $100 ordinary loss. The members of the P group contribute the following to the consolidated taxable income of the P group for Years 3 and 4 (computed without regard to T's recognition of its unrealized loss and any CNOL deduction under this section):

	Year 3	Year 4	Total
P group (without T)	$100	$100	$200
T	60	40	100
CTI	160	140	300

(ii) Under §1.1502–15(a), T's $100 of ordinary loss in Year 3 constitutes a built-in loss that is subject to the SRLY limitation under paragraph (c) of this section. The amount of the limitation is determined by treating the deduction as a net operating loss carryover from a SRLY. The built-in loss is therefore subject to a $60 SRLY limitation for Year 3. The built-in loss is treated as a net operating loss carryover solely for purposes of determining the extent to which the loss is not allowed by reason of the SRLY limitation, and for all other purposes the loss remains a loss arising in Year 3. Consequently, under paragraph (b) of this section, the $60 allowed under the SRLY limitation is absorbed by the P group before T's $100 net operating loss carryover from Year 1 is allowed.

(iii) Under §1.1502–15(a), the $40 balance of the built-in loss that is not allowed in Year 3 because of the SRLY limitation is treated as a $40 net operating loss arising in Year 3 that is subject to the SRLY limitation because, under paragraph (c)(1)(ii) of this section, Year 3 is treated as a SRLY, and is carried to other years in accordance with the rules of paragraph (b) of this section. The SRLY limitation for Year 4 is the P group's consolidated taxable income for Year 3 and Year 4 determined by reference to only T's items and without regard to the group's CNOL deductions ($60 + $40), reduced by T's loss actually absorbed by the group in Year 3 ($60). The SRLY limitation for Year 4 is $40.

(iv) Under paragraph (c) of this section and the principles of section 172(b), $40 of T's $100 net operating loss carryover from Year 1 is included in the CNOL deduction under paragraph (a) of this section in Year 4.

Example 5. Dual SRLY registers and accounting for SRLY losses actually absorbed. (i) In Year 1, T sustains a $100 net operating loss and a $50 net capital loss. At the beginning of Year 2, T becomes a member of the P group in a transaction that does not result in an ownership change under section 382(g). Both of T's carryovers from Year 1 are subject to SRLY limits under this paragraph (c) and §1.1502–22(c). The members of the P group contribute the following to the consolidated taxable income for Years 2 and 3 (computed without regard to T's CNOL deduction under this section or net capital loss carryover under §1.1502–22):

	P	T
Year 1 (SRLY)		
Ordinary	.....	(100)
Capital	.....	(50)
Year 2		
Ordinary	30	60
Capital	0	(20)
Year 3		
Ordinary	10	40
Capital	0	30

(ii) For Year 2, the group computes separate SRLY limits for each of T's SRLY carryovers from Year 1. The group determines its ability to use its capital loss carryover before it determines its ability to use its ordinary loss carryover. Under section 1212, because the group has no Year 2 capital gain, it cannot absorb any capital losses in Year 2. T's Year 1 net capital loss and the group's Year 2 consolidated net capital loss (all of which is attributable to T) are carried over to Year 3.

(iii) Under this section, the aggregate amount of T's $100 net operating loss carryover from Year 1 that may be included in the CNOL deduction of the group for Year 2 may not exceed $60—the amount of the consolidated taxable income computed by reference only to T's items, including losses and deductions to the extent actually absorbed (i.e., $60 of T's ordinary income for Year 2). Thus, the group may include $60 of T's ordinary loss carryover from Year 1 in its Year 2 CNOL deduction. T carries over its remaining $40 of its Year 1 loss to Year 3.

(iv) For Year 3, the group again computes separate SRLY limits for each of T's SRLY carryovers from Year 1. The group has consolidated net capital gain (without taking into account a net capital loss carryover deduction) of $30. Under §1.1502–22(c), the aggregate amount of T's $50 capital loss carryover from Year 1 that may be included in computing the group's consolidated net capital gain for all years of the group (here Years 2 and 3) may not exceed $30 (the aggregate consolidated net capital gain computed by reference only to T's items, including losses and deductions actually absorbed (i.e., $30 of capital gain in Year 3)). Thus, the group may include $30 of T's Year 1 capital loss carryover in its computation of consolidated net capital gain for Year 3, which offsets the group's capital gains for Year 3. T carries over its remaining $20 of its Year 1 loss to Year 4. The group carries over the Year 2 consolidated net capital loss to Year 4.

(v) Under this section, the aggregate amount of T's net operating loss carryover from Year 1 that may be included in the CNOL deduction of the group for Years 2 and 3 may not exceed $100, which is the amount of the aggregate consolidated taxable income for Years 2 and 3 determined by reference

only to T's items, including losses and deductions actually absorbed (i.e., $60 of ordinary income in Year 2 plus $40 of ordinary income, $30 of capital gain, and $30 of SRLY capital losses actually absorbed in Year 3). The group included $60 of T's ordinary loss carryover in its Year 2 CNOL deduction. It may include the remaining $40 of the carryover in its Year 3 CNOL deduction.

(2) *SRLY subgroup limitation*. In the case of a net operating loss carryover or carryback for which there is a SRLY subgroup, the principles of paragraph (c)(1) of this section apply to the SRLY subgroup, and not separately to its members. Thus, the contribution to consolidated taxable income and the net operating loss carryovers and carrybacks arising (or treated as arising) in SRLYs that are included in the CNOL deductions for all consolidated return years of the group under paragraph (a) of this section are based on the aggregate amounts of income, gain, deduction, and loss of the members of the SRLY subgroup for the relevant consolidated return years (as provided in paragraph (c)(1)(i)(C) of this section). For an illustration of aggregate amounts during the relevant consolidated return years following the year in which a member of a SRLY subgroup ceases to be a member of the group, see paragraph (c)(2)(viii) *Example 4* of this section. A SRLY subgroup may exist only for a carryover or carryback arising in a year that is not a SRLY (and is not treated as a SRLY under paragraph (c)(1)(ii) of this section) with respect to another group (the former group), whether or not the group is a consolidated group, or for a carryover that was subject to the overlap rule described in paragraph (g) of this section or § 1.1502–15(g) with respect to another group (the former group). A separate SRLY subgroup is determined for each such carryover or carryback. A consolidated group may include more than one SRLY subgroup, and a member may be a member of more than one SRLY subgroup. Solely for purposes of determining the members of a SRLY subgroup with respect to a loss:

(i) *Carryovers*. In the case of a carryover, the SRLY subgroup is composed of the member carrying over the loss (the loss member) and each other member that was a member of the former group that becomes a member of the group at the same time as the loss member. A member remains a member of the SRLY subgroup until it ceases to be affiliated with the loss member. The aggregate determination described in paragraph (c)(1) of this section and this paragraph (c)(2) includes the amounts of income, gain, deduction, and loss of each member of the SRLY subgroup for the consolidated return years during which it remains a member of the SRLY subgroup. For an illustration of the aggregate determination of a SRLY subgroup, see paragraph (c)(2)(viii) *Example 2* of this section.

(ii) *Carrybacks*. In the case of a carryback, the SRLY subgroup is composed of the member carrying back the loss (the loss member) and each other member of the group from which the loss is carried back that has been continuously affiliated with the loss member from the year to which the loss is carried through the year in which the loss arises.

(iii) *Built-in losses*. In the case of a built-in loss, the SRLY subgroup is composed of the member recognizing the loss (the loss member) and each other member that was part of the subgroup with respect to the loss determined under § 1.1502–15(c)(2) immediately before the members became members of the group. The principles of paragraphs (c)(2)(i) and (ii) of this section apply to determine the SRLY subgroup for the built-in loss that is, under paragraph (c)(1)(ii) of this section, treated as arising in a SRLY with respect to the group in which the loss is recognized. For this purpose and as the context requires, a reference in paragraphs (c)(2)(i) and (ii) of this section to a group or former group is a reference to the subgroup determined under § 1.1502–15(c)(2).

(iv) *Principal purpose of avoiding or increasing a SRLY limitation*. The members composing a SRLY subgroup are not treated as a SRLY subgroup if any of them is formed, acquired, or availed of with a principal purpose of avoiding the application of, or increasing any limitation under, this paragraph (c). Any member excluded from a SRLY subgroup, if excluded with a principal purpose of so avoiding or increasing any SRLY limitation, is treated as included in the SRLY subgroup.

(v) *Coordination with other limitations.* This paragraph (c)(2) does not allow a net operating loss to offset income to the extent inconsistent with other limitations or restrictions on the use of losses, such as a limitation based on the nature or activities of members. For example, any dual consolidated loss may not reduce the taxable income to an extent greater than that allowed under section 1503(d) and § 1.1503–2. See also § 1.1502–47(q) (relating to preemption of rules for life-nonlife groups).

(vi) *Anti-duplication.* If the same item of income or deduction could be taken into account more than once in determining a limitation under this paragraph (c), or in a manner inconsistent with any other provision of the Internal Revenue Code or regulations incorporating this paragraph (c), the item of income or deduction is taken into account only once and in such manner that losses are absorbed in accordance with the ordering rules in paragraph (b) of this section and the underlying purposes of this section.

(vii) *Corporations that leave a SRLY subgroup.* If a loss member ceases to be affiliated with a SRLY subgroup, the amount of the member's remaining SRLY loss from a specific year is determined by multiplying the aggregate of the unabsorbed net operating loss carryovers of the SRLY subgroup from that year by a fraction, the numerator of which is the net operating loss carryover for that year that the member leaving the subgroup had when it became a member of the group, and the denominator of which is the aggregate of the net operating loss carryovers of the members of the SRLY subgroup for that year when they joined the group. The unabsorbed net operating loss carryovers of the SRLY subgroup are those carryovers that have not been absorbed by the group as of the end of the taxable year in which the loss member leaves the group.

(viii) *Examples.* The principles of this paragraph (c)(2) are illustrated by the following examples:

Example 1. Members of SRLY subgroups. (i) Individual A owns all of the stock of P, S, T and M. P and M are each the common parent of a consolidated group. During Year 1, P sustains a $50 net operating loss. At the beginning of Year 2, P acquires all the stock of S at a time when the aggregate basis of S's assets exceeds their aggregate value by $70, and S becomes a member of the P group. At the beginning of Year 3, P acquires all the stock of T, T has a $60 net operating loss carryover at the time of the acquisition, and T becomes a member of the P group. During Year 4, S forms S1 and T forms T1, each by contributing assets with built-in gains which are, in the aggregate, material. S1 and T1 become members of the P group. During Year 7, M acquires all of the stock of P, and the members of the P group become members of the M group for the balance of Year 7. The $50 and $60 loss carryovers of P and T are carried to Year 7 of the M group, and the value and basis of S's assets did not change after it became a member of the former P group. None of the transactions described above resulted in an ownership change under section 382(g).

(ii) Under paragraph (c)(2) of this section, a separate SRLY subgroup is determined for each loss carryover and built-in loss. In the P group, P's $50 loss carryover is not treated as arising in a SRLY. See § 1.1502–1(f). Consequently, the carryover is not subject to limitation under paragraph (c) of this section in the P group.

(iii) In the M group, P's $50 loss carryover is treated as arising in a SRLY and is subject to the limitation under paragraph (c) of this section. A SRLY subgroup with respect to that loss is composed of members which were members of the P group, the group as to which the loss was not a SRLY. The SRLY subgroup is composed of P, the member carrying over the loss, and each other member of the P group that became a member of the M group at the same time as P. A member of the SRLY subgroup remains a member until it ceases to be affiliated with P. For Year 7, the SRLY subgroup is composed of P, S, T, S1, and T1.

(iv) In the P group, S's $70 unrealized loss, if recognized within the 5-year recognition period after S becomes a member of the P group, is subject to limitation under paragraph (c) of this section. See § 1.1502–15 and paragraph (c)(1)(ii) of this section. Because S was not continuously affiliated with P, T, or T1 for 60 consecutive months prior to joining the P group, these corporations cannot be included in a SRLY subgroup with respect to S's unrealized loss in the P group. See paragraph (c)(2)(iii) of this section. As a successor to S, S1 is included in a subgroup with S in the P group, and, because 100 percent of S1's stock is owned directly by corporations that were members of the SRLY subgroup when the members of the SRLY subgroup became members of the P group, its net positive income is not excluded from the consolidated taxable income of the P group that may be offset by the built-in loss. See paragraph (f) of this section.

(v) In the M group, S's $70 unrealized loss, if recognized within the 5-year recognition period after S becomes a member of the M group, is subject to limitation under paragraph (c) of this section. Prior to becoming a member of the M group, S had been continuously affiliated with P (but not T or T1) for 60 consecutive months, and S1 is a successor that has remained continuously affiliated with S. Those members had a net unrealized built-in loss immediately before they became members of the group under §1.1502–15(c). Consequently, in Year 7, S, S1, and P compose a subgroup in the M group with respect to S's unrealized loss. Because S1 was a member of the SRLY subgroup when it became a member of the M group and also because 100 percent of S1's stock is owned directly by corporations that were members of the SRLY subgroup when the members of the SRLY subgroup became members of the M group, its net positive income is not excluded from the consolidated taxable income of the M group that may be offset by the recognized built-in loss. See paragraph (f) of this section.

(vi) In the P group, T's $60 loss carryover arose in a SRLY and is subject to limitation under paragraph (c) of this section. P, S, and S1 were not members of the group in which T's loss arose, and T's loss carryover was not subject to the overlap rule described in paragraph (g) of this section with respect to the P group (the former group). Thus, P, S, and S1 are not members of a SRLY subgroup with respect to the T carryover in the P group. See paragraph (c)(2)(i) of this section. As a successor to T, T1 is included in a SRLY subgroup with T in the P group, and, because 100 percent of T1's stock is owned directly by corporations that were members of the SRLY subgroup when the members of the SRLY subgroup became members of the P group, its net positive income is not excluded from the consolidated taxable income of the P group that may be offset by the carryover. See paragraph (f) of this section.

(vii) In the M group, T's $60 loss carryover arose in a SRLY and is subject to limitation under paragraph (c) of this section. T and T1 remain the only members of a SRLY subgroup with respect to the carryover. Because T1 was a member of the SRLY subgroup when it became a member of the M group and also because 100 percent of T1's stock is owned directly by corporations that were members of the SRLY subgroup when the members of the SRLY subgroup became members of the M group, its net positive income is not excluded from the consolidated taxable income of the M group that may be offset by the carryover. See paragraph (f) of this section.

Example 2. Computation of SRLY subgroup limitation. (i) Individual A owns all of the stock of S, T, P and M. P and M are each the common parent of a consolidated group. In Year 2, P acquires all the stock of S and T from Individual A, and S and T become members of the P group. For Year 3, the P group has a $45 CNOL, which is attributable to P, and which P carries forward. M is the common parent of another group. At the beginning of Year 4, M acquires all of the stock of P, and the former members of the P group become members of the M group. None of the transactions described above resulted in an ownership change under section 382(g).

(ii) P's year to which the loss is attributable, Year 3, is a SRLY with respect to the M group. See §1.1502–1(f)(1). However, P, S, and T compose a SRLY subgroup with respect to the Year 3 loss under paragraph (c)(2)(i) of this section because Year 3 is not a SRLY (and is not treated as a SRLY) with respect to the P group. P's loss is carried over to the M group's Year 4 and is therefore subject to the SRLY subgroup limitation in paragraph (c)(2) of this section.

(iii) In Year 4, the M group has $10 of consolidated taxable income (computed without regard to the CNOL deduction for Year 4). Such consolidated taxable income would be $45 if determined by reference to only the items of P, S, and T, the members included in the SRLY subgroup with respect to P's loss carryover. Therefore, the SRLY subgroup limitation under paragraph (c)(2) of this section for P's net operating loss carryover from Year 3 is $45. Because the M group has only $10 of consolidated taxable income in Year 4, however, only $10 of P's net operating loss carryover is included in the CNOL deduction under paragraph (a) of this section in Year 4.

(iv) In Year 5, the M group has $100 of consolidated taxable income (computed without regard to the CNOL deduction for Year 5). Neither P, S, nor T has any items of income, gain, deduction, or loss in Year 5. Although the members of the SRLY subgroup do not contribute to the $100 of consolidated taxable income in Year 5, the SRLY subgroup limitation for Year 5 is $35 (the sum of SRLY subgroup consolidated taxable income of $45 in Year 4 and $0 in Year 5, less the $10 net operating loss carryover actually absorbed by the M group in Year 4). Therefore, $35 of P's net operating loss carryover is included in the CNOL deduction under paragraph (a) of this section in Year 5.

Example 3. Inclusion in more than one SRLY subgroup. (i) Individual A owns all of the stock of S, T, P and M. S, P, and M are each the common parent of a consolidated group. At the beginning of Year 1, S acquires all the stock of T from Individual A, and T becomes a member of the S group. For Year 1, the S group has a CNOL of $10, all of which is attributable to S and is carried over to Year 2. At the beginning of Year 2, P acquires all the stock of S, and S and T become members of the P group. For Year 2, the P group has a CNOL of $35, all of which is attributable to P

and is carried over to Year 3. At the beginning of Year 3, M acquires all of the stock of P, and the former members of the P group become members of the M group. None of the transactions described above resulted in an ownership change under section 382(g).

(ii) P's and S's net operating losses arising in SRLYs with respect to the M group are subject to limitation under paragraph (c) of this section. P, S, and T compose a SRLY subgroup for purposes of determining the limitation for P's $35 net operating loss carryover arising in Year 2 because, under paragraph (c)(2)(i) of this section, Year 2 is not a SRLY with respect to the P group. Similarly, S and T compose a SRLY subgroup for purposes of determining the limitation for S's $10 net operating loss carryover arising in Year 1 because Year 1 is not a SRLY with respect to the S group.

(iii) S and T are members of both the SRLY subgroup with respect to P's losses and the SRLY subgroup with respect to S's losses. Under paragraph (c)(2) of this section, S's and T's items cannot be included in the determination of the SRLY subgroup limitation for both SRLY subgroups for the same consolidated return year; paragraph (c)(2)(vi) of this section requires the M group to consider the items of S and T only once so that the losses are absorbed in the order of the taxable years in which they were sustained. Because S's loss was incurred in Year 1, while P's loss was incurred in Year 2, the items will be added in the determination of the consolidated taxable income of the S and T SRLY subgroup to enable S's loss to be absorbed first. The taxable income of the P, S, and T SRLY subgroup is then computed by including the consolidated taxable income for the S and T SRLY subgroup less the amount of any net operating loss carryover of S that is absorbed after applying this section to the S subgroup for the year.

Example 4. Corporation ceases to be affiliated with a SRLY subgroup. (i) Individual A owns all of the stock of P, and M. P and S are members of the P group and the P group has a CNOL of $30 in Year 1, all of which is attributable to P and carried over to Year 2. At the beginning of Year 2, M acquires all of the stock of P, and P and S become members of the M group. P and S compose a SRLY subgroup with respect to P's net operating loss carryover. For Year 2, consolidated taxable income of the M group determined by reference to only the items of P (and without regard to the CNOL deduction for Year 2) is $40. However, such consolidated taxable income of the M group determined by reference to the items of both P and S is a loss of $20. Thus, the SRLY subgroup limitation under paragraph (c)(2) of this section prevents the M group from including any of P's net operating loss carryover in the CNOL deduction under paragraph (a) of this section in Year 2, and P carries the Year 1 loss to Year 3.

(ii) At the end of Year 2, P sells all of the S stock, and S ceases to be a member of the M group and the P subgroup. For Year 3, consolidated taxable income of the M group is $50 (determined without regard to the CNOL deduction for Year 3), and such consolidated taxable income would be $10 if determined by reference to only items of P. However, the limitation under paragraph (c) of this section for Year 3 for P's net operating loss carryover still prevents the M group from including any of P's loss in the CNOL deduction under paragraph (a) of this section. The limitation results from the inclusion of S's items for Year 2 in the determination of the SRLY subgroup limitation for Year 3 even though S ceased to be a member of the M group (and the P subgroup) at the end of Year 2. Thus, the M group's consolidated taxable income determined by reference to only the SRLY subgroup members' items for all consolidated return years of the group through Year 3 (determined without regard to the CNOL deduction) is not a positive amount.

(ix) *Application to other than loss carryovers.* Paragraph (g) of this section and the phrase ''or for a carryover that was subject to the overlap rule described in paragraph (g) of this section or § 1.1502–15(g) with respect to another group (the former group)'' in this paragraph (c)(2) apply only to carryovers of net operating losses, net capital losses, and for taxable years for which the due date (without extensions) of the consolidated return is after May 25, 2000, to carryovers of credits described in section 383(a)(2). Accordingly, as the context may require, if another regulation references this section and such other regulation does not concern a carryover of net operating losses, net capital losses, or for taxable years for which the due date (without extensions) of the consolidated return is after May 25, 2000, carryovers of credits described in section 383(a)(2), then such reference does not include a reference to such paragraph or phrase.

(d) *Coordination with consolidated return change of ownership limitation and transactions subject to old section 382*—(1) *Consolidated return changes of ownership.* If a consolidated return change of ownership occurred before January 1, 1997, the principles of § 1.1502–21A(d) apply to determine the amount of the aggregate of the net operating losses attributable to old members of the group that may be included in the consolidated net operating loss deduction

under paragraph (a) of this section. For this purpose, § 1.1502–1(g) is applied by treating that date as the end of the year of change.

(2) *Old section 382.* The principles of § 1.1502–21A(e) apply to disallow or reduce the amount of a net operating loss carryover of a member as a result of a transaction subject to old section 382.

(e) *Consolidated net operating loss.* Any excess of deductions over gross income, as determined under § 1.1502–11(a) (without regard to any consolidated net operating loss deduction), is also referred to as the consolidated net operating loss (or CNOL).

(f) *Predecessors and successors*—(1) *In general.* For purposes of this section, any reference to a corporation, member, common parent, or subsidiary, includes, as the context may require, a reference to a successor or predecessor, as defined in § 1.1502–1(f)(4).

(2) *Limitation on SRLY subgroups*—(i) *General rule.* Except as provided in paragraph (f)(2)(ii) of this section, if a successor's items of income and gain exceed the successor's items of deduction and loss (net positive income), then the net positive income attributable to the successor is excluded from the computation of the consolidated taxable income of a SRLY subgroup.

(ii) *Exceptions.* A successor's net positive income is not excluded from the consolidated taxable income of a SRLY subgroup if—

(A) The successor acquires substantially all the assets and liabilities of its predecessor, and the predecessor ceases to exist;

(B) The successor was a member of the SRLY subgroup when the SRLY subgroup members became members of the group;

(C) 100 percent of the stock of the successor is owned directly by corporations that were members of the SRLY subgroup when the SRLY subgroup members became members of the group; or

(D) The Commissioner so determines.

(g) *Overlap with section 382*—(1) *General rule.* The limitation provided in paragraph (c) of this section does not apply to net operating loss carryovers (other than a hypothetical carryover described in paragraph (c)(1)(i)(D) of this section and a carryover described in paragraph (c)(1)(ii) of this section) when the application of paragraph (c) of this section results in an overlap with the application of section 382. For a similar rule applying in the case of net operating loss carryovers described in paragraphs (c)(1)(i)(D) and (c)(1)(ii) of this section, see § 1.1502–15(g).

(2) *Definitions*—(i) *Generally.* For purposes of this paragraph (g), the definitions and nomenclature contained in section 382, the regulations thereunder, and §§ 1.1502–90 through 1.1502–99 apply.

(ii) *Overlap.* (A) An overlap of the application of paragraph (c) of this section and the application of section 382 with respect to a net operating loss carryover occurs if a corporation becomes a member of a consolidated group (the SRLY event) within six months of the change date of an ownership change giving rise to a section 382(a) limitation with respect to that carryover (the section 382 event).

(B) If an overlap described in paragraph (g)(2)(ii)(A) of this section occurs with respect to net operating loss carryovers of a corporation whose SRLY event occurs within the six month period beginning on the date of a section 382 event, then an overlap is treated as also occurring with respect to that corporation's net operating loss carryover that arises within the period beginning with the section 382 event and ending with the SRLY event.

(C) For special rules in the event that there is a SRLY subgroup and/or a loss subgroup as defined in § 1.1502–91(d)(1) with respect to a carryover, see paragraph (g)(4) of this section.

(3) *Operating rules*—(i) *Section 382 event before SRLY event.* If a SRLY event occurs on the same date as a section 382 event or within the six month period beginning on the date of the section 382 event, paragraph (g)(1) of this section applies beginning with the tax year that includes the SRLY event.

(ii) *SRLY event before section 382 event.* If a section 382 event occurs within the period beginning the day after the SRLY event and ending six months after the SRLY event, paragraph (g)(1) of this section applies starting with the first tax year that begins after the section 382 event.

(4) *Subgroup rules*. In general, in the case of a net operating loss carryover for which there is a SRLY subgroup and a loss subgroup (as defined in § 1.1502–91(d)(1)), the principles of this paragraph (g) apply to the SRLY subgroup, and not separately to its members. However, paragraph (g)(1) of this section applies—

(i) With respect to a carryover described in paragraph (g)(2)(ii)(A) of this section only if—

(A) All members of the SRLY subgroup with respect to that carryover are also included in a loss subgroup with respect to that carryover; and

(B) All members of a loss subgroup with respect to that carryover are also members of a SRLY subgroup with respect to that carryover; and

(ii) With respect to a carryover described in paragraph (g)(2)(ii)(B) of this section only if all members of the SRLY subgroup for that carryover are also members of a SRLY subgroup that has net operating loss carryovers described in paragraph (g)(2)(ii)(A) of this section that are subject to the overlap rule of paragraph (g)(1) of this section.

(5) *Examples*. The principles of this paragraph (g) are illustrated by the following examples:

Example 1. Overlap—Simultaneous Acquisition. (i) Individual A owns all of the stock of P, which in turn owns all of the stock of S. P and S file a consolidated return. In Year 2, B, an individual unrelated to Individual A, forms T which incurs a $100 net operating loss for that year. At the beginning of Year 3, S acquires T.

(ii) S's acquisition of T results in T becoming a member of the P group (the SRLY event) and also results in an ownership change of T, within the meaning of section 382(g), that gives rise to a limitation under section 382(a) (the section 382 event) with respect to the T carryover.

(iii) Because the SRLY event and the change date of the section 382 event occur on the same date, there is an overlap of the application of the SRLY rules and the application of section 382.

(iv) Consequently, under this paragraph (g), in Year 3 the SRLY limitation does not apply to the Year 2 $100 net operating loss.

Example 2. Overlap—Section 382 event before SRLY event. (i) Individual A owns all of the stock of P, which in turn owns all of the stock of S. P and S file a consolidated return. In Year 1, B, an individual unrelated to Individual A, forms T which incurs a $100 net operating loss for that year. On February 28 of Year 2, S purchases 55% of T from Individual B. On June 30, of Year 2, S purchases an additional 35% of T from Individual B.

(ii) The February 28 purchase of 55% of T is a section 382 event because it results in an ownership change of T, under section 382(g), that gives rise to a section 382(a) limitation with respect to the T carryover. The June 30 purchase of 35% of T results in T becoming a member of the P group and is therefore a SRLY event.

(iii) Because the SRLY event occurred within six months of the change date of the section 382 event, there is an overlap of the application of the SRLY rules and the application of section 382.

(iv) Consequently, under paragraph (g) of this section, in Year 2 the SRLY limitation does not apply to the Year 1 $100 net operating loss.

Example 3. No overlap—Section 382 event before SRLY event. (i) The facts are the same as in *Example 2* except that Individual B does not sell the additional 35% of T to S until September 30, Year 2.

(ii) The February 28 purchase of 55% of T is a section 382 event because it results in an ownership change of T, under section 382(g), that gives rise to a section 382(a) limitation with respect to the T carryover. The September 30 purchase of 35% of T results in T becoming a member of the P group and is therefore a SRLY event.

(iii) Because the SRLY event did not occur within six months of the change date of the section 382 event, there is no overlap of the application of the SRLY rules and the application of section 382. Consequently, the Year 1 net operating loss is subject to a SRLY limitation and a section 382 limitation.

Example 4. Overlap—SRLY event before section 382 event. (i) P and S file a consolidated return. S has owned 40% of T for 6 years. For Year 6, T has a net operating loss of $500 that is carried forward. On March 31, Year 7, S acquires an additional 40% of T, and on August 31, Year 7, S acquires the remaining 20% of T.

(ii) The March 31 purchase of 40% of T results in T becoming a member of the P group and is therefore a SRLY event. The August 31 purchase of 20% of T is a section 382 event because it results in an ownership change of T, under section 382(g), that gives rise to a section 382(a) limitation with respect to the T carryover.

(iii) Because the SRLY event occurred within six months of the change date of the section 382 event, there is an overlap of the application of the SRLY rules and the application of section 382 within the meaning of this paragraph (g).

(iv) Under this paragraph (g), the SRLY rules of paragraph (c) of this section will apply to the Year 7 tax year. Beginning in Year 8 (the year after the section 382 event),

any unabsorbed portion of the Year 6 net operating loss will not be subject to a SRLY limitation.

Example 5. Overlap—Coextensive subgroups. (i) Individual A owns all of the stock of S, which in turn owns all of the stock of T. S and T file a consolidated return beginning in Year 1. B, an individual unrelated to Individual A, owns all of the stock of P, the common parent of a consolidated group. In Year 2, the S group has a $200 consolidated net operating loss which is carried forward, of which $100 is attributable to S, and $100 is attributable to T. At the beginning of Year 3, the P group acquires all of the stock of S from Individual A.

(ii) P's acquisition of S results in S and T becoming members of the P group (the SRLY event). With respect to the Year 2 net operating loss carryover, S and T compose a SRLY subgroup under paragraph (c)(2) of this section.

(iii) S and T also compose a loss subgroup under §1.1502–91(d)(1) with respect to the Year 2 net operating loss carryover. P's acquisition also results in an ownership change of S, the subgroup parent, within the meaning of section 382(g), that gives rise to a limitation under section 382(a) (the section 382 event) with respect to the Year 2 carryover.

(iv) Because the SRLY event and the change date of the section 382 event occur on the same date, there is an overlap of the application of the SRLY rules and the application of section 382 within the meaning of paragraph (g) of this section. Because the SRLY subgroup and the loss subgroup are coextensive, under paragraph (g) of this section, the SRLY limitation does not apply to the Year 2 $200 net operating loss.

Example 6. No overlap—Different subgroups. (i) Individual B owns all of the stock of P, the common parent of a consolidated group. P owns all of the stock of S and all of the stock of T. Individual A owns all of the stock of X, the common parent of another consolidated group. In Year 1, the P group has a $200 consolidated net operating loss, of which $100 is attributable to S and $100 is attributable to T. At the beginning of Year 3, the X group acquires all of the stock of S and T from P and does not make an election under §1.1502–91(d)(4) (concerning an election to treat the loss subgroup parent requirement as having been satisfied).

(ii) X's acquisition of S and T results in S and T becoming members of the X group (the SRLY event). With respect to the Year 1 net operating loss, S and T compose a SRLY subgroup under paragraph (c)(2) of this section.

(iii) S and T do not bear (and are not treated as bearing) a section 1504(a)(1) relationship. Therefore S and T do not qualify as a loss subgroup under §1.1502–91(d)(1). X's acquisition of S and T results in separate ownership changes of S and T, that give rise to separate limitations under section 382(a) (the section 382 events) with respect to each of S and T's Year 1 net operating loss carryovers. See §1.1502–94.

(iv) The SRLY event and the change dates of the section 382 events occur on the same date. However, paragraph (g)(1) of this section does not apply because the SRLY subgroup (composed of S and T) is not coextensive with a loss subgroup with respect to the Year 1 carryovers. Consequently, the Year 1 net operating loss is subject to both a SRLY subgroup limitation and also separate section 382 limitations for each of S and T.

Example 7. No overlap—Different subgroups. (i) Individual A owns all of the stock of T and all of the stock of S, the common parent of a consolidated group. B, an individual unrelated to Individual A, owns all of the stock of P, the common parent of another consolidated group. In Year 1, T has a net operating loss of $100 that is carried forward. At the end of Year 2, S acquires all of the stock of T from Individual A. In Year 3, the S group sustains a $200 consolidated net operating loss that is carried forward. In Year 8, the P group acquires all of the stock of S from Individual A.

(ii) S's acquisition of T in Year 1 results in T becoming a member of the S group. The acquisition, however, did not result in an ownership change under section 382(g). As a result, T's Year 1 net operating loss is subject to SRLY within the S group. At the end of Year 7, §1.1502–96(a) treats T's Year 1 net operating loss as not having arisen in a SRLY with respect to the S group. Section 1.1502–96(a), however, applies only for purposes of §§1.1502–91 through 1.1502–96 and §1.1502–98 but not for purposes of this section. See §1.1502–96(a)(5).

(iii) P's acquisition of S in Year 8 results in S and T becoming members of the P group (the SRLY event). With respect to the Year 1 net operating loss, S and T do not compose a SRLY subgroup under paragraph (c)(2) of this section.

(iv) S and T compose a loss subgroup under §1.1502–91(d)(1) with respect to the Year 1 net operating loss carryover. P's acquisition of S results in an ownership change of the loss subgroup, within the meaning of section 382(g), that gives rise to a subgroup limitation under section 382(a) (the section 382 event) with respect to that carryover.

(v) The SRLY event and the change date of the section 382 event occur on the same date. However, under paragraph (g)(4) of this section, because the SRLY subgroup and the loss subgroup are not coextensive, T's Year 1 net operating loss carryover is subject to a SRLY limitation.

(vi) With respect to the Year 3 net operating loss carryover, S and T compose both a SRLY subgroup and a loss subgroup under §1.1502–91(d)(1). Thus, paragraph (g)(1) of this section applies, and the S group's Year 3 net

operating loss carryover is not subject to a SRLY limitation.

Example 8. SRLY after overlap. (i) Individual A owns all of the stock of R and M, each the common parent of a consolidated group. B, an individual unrelated to Individual A, owns all of the stock of D. In Year 1, D incurs a $100 net operating loss that is carried forward. At the beginning of Year 3, R acquires all of the stock of D. In Year 5, M acquires all of the stock of R in a transaction that did not result in an ownership change of R.

(ii) R's Year 3 acquisition of D results in D becoming a member of the R group (the SRLY event) and also results in an ownership change of D, that gives rise to a limitation under section 382(a) (the section 382 event) with respect to D's net operating loss carryover.

(iii) Because the SRLY event and the change date of the section 382 event occur on the same date, there is an overlap of the application of paragraph (c) of this section and section 382 with respect to D's net operating loss. Consequently, under this paragraph (g), D's Year 1 $100 net operating loss is not subject to a SRLY limitation in the R group.

(iv) M's Year 5 acquisition of R results in R and D becoming members of the M group (the SRLY event), but does not result in an ownership change of R or D that gives rise to a limitation under section 382(a). Because there is no section 382 event, the application of the SRLY rules and section 382 do not overlap. Consequently, D's Year 1 $100 net operating loss is subject to a SRLY limitation in the M group.

(v) Because D's Year 1 net operating loss carryover was subject to the overlap rule of paragraph (g) of this section when it joined the R group, under §1.1502–21(c)(2), the SRLY subgroup with respect to that carryover includes all of the members of the R group that joined the M group at the same time as D.

Example 9. Overlap—Interim losses. (i) Individual A owns all of the stock of P and S, each the common parent of a consolidated group. S owns all of the stock of T, its only subsidiary. B, an individual unrelated to Individual A, owns all of the stock of M, the common parent of a consolidated group. In Year 1, the S group has a $100 consolidated net operating loss. On January 1 of Year 2, P acquires all of the stock of S from Individual A. On December 31 of Year 2, M acquires 51% of the stock of P from Individual A. On May 31 of Year 3, M acquires the remaining 49% of the stock of P from Individual A. The P group, for the Year 3 period prior to June 1, had a $50 consolidated net operating loss, and under paragraph (b)(2)(iv) of this section, the loss is attributable entirely to S. Other than the losses described above, the P group does not have any other consolidated net operating losses.

(ii) In the P group, S's $100 loss carryover is treated as arising in a SRLY and is subject to the limitation under paragraph (c) of this section. A SRLY subgroup with respect to that loss is composed of S and T, the members which were members of the S group as to which the loss was not a SRLY.

(iii) M's December 31 purchase of 51% of P is a section 382 event because it results in an ownership change of the S loss subgroup that gives rise to a section 382(a) limitation (the section 382 event) with respect to the Year 1 net operating loss carryover. The purchase, however, does not result in an ownership change of P because it is not a loss corporation under section 382(k)(1). M's May 31 purchase of 49% of P results in P, S, and T becoming members of the M group and is therefore a SRLY event.

(iv) With respect to the Year 1 net operating loss, S and T compose a SRLY subgroup under paragraph (c)(2) of this section and a loss subgroup under §1.1502–91(d)(1). The loss subgroup does not include P because the only loss at the time of the section 382 event was subject to SRLY with respect to the P group. See §1.1502–91(d)(1).

(v) Because the SRLY event occured within six months of the change date of the section 382 event and the SRLY subgroup and loss subgroup are coextensive with respect to the Year 1 net operating loss carryover, there is an overlap of the application of the SRLY rules and the application of section 382 within the meaning of paragraph (g) of this section. Thus, the SRLY limitation does not apply to that carryover.

(vi) The Year 3 net operating loss, which arose between the section 382 event and the SRLY event, is a net operating loss described in paragraph (g)(2)(ii)(B) of this section because it is the net operating loss of a corporation whose SRLY event occurs within the six month period beginning on the date of a section 382 event.

(vii) With respect to the Year 3 net operating loss, P, S, and T compose a SRLY subgroup under paragraph (c)(2) of this section. Because P, a member of the SRLY subgroup for the Year 3 carryover, is not also a member of a SRLY subgroup that has net operating loss carryovers described in paragraph (g)(2)(ii)(A) of this section (the Year 1 net operating loss), the Year 3 carryover is subject to a SRLY limitation in the M group. See paragraph (g)(4)(ii) of this section.

(h) *Effective date*—(1) *In general.* This section generally applies to taxable years for which the due date (without extensions) of the consolidated return is after June 25, 1999. However—

(i) In the event that paragraph (g)(1) of this section does not apply to a particular net operating loss carryover in

the current group, then solely for purposes of applying paragraph (c) of this section to determine a limitation with respect to that carryover and with respect to which the SRLY register (consolidated taxable income determined by reference to only the member's or subgroup's items of income, gain, deduction, or loss) began in a taxable year for which the due date of the return was on or before June 25, 1999, paragraph (c)(2) of this section shall be applied without regard to the phrase ''or for a carryover that was subject to the overlap rule described in paragraph (g) of this section or §1.1502–15(g) with respect to another group (the former group)''; and

(ii) For purposes of paragraph (g) of this section, only an ownership change to which section 382(a), as amended by the Tax Reform Act of 1986, applies shall constitute a section 382 event.

(2) *SRLY limitation*. Except in the case of those members (including members of a SRLY subgroup) described in paragraph (h)(3) of this section, a group does not take into account a consolidated taxable year beginning before January 1, 1997, in determining the aggregate of the consolidated taxable income under paragraph (c)(1) of this section (including for purposes of §1.1502–15 and §1.1502–22(c)) for the members (or SRLY subgroups).

(3) *Prior retroactive election*. A consolidated group that applied the rules of §1.1502–21T(g)(3) in effect prior to June 25, 1999, as contained in 26 CFR part 1 revised April 1, 1999, to all consolidated return years ending on or after January 29, 1991, and beginning before January 1, 1997, does not take into account a consolidated taxable year beginning before January 29, 1991, in determining the aggregate of the consolidated taxable income under paragraph (c)(1) of this section (including for purposes of §1.1502–15 and §1.1502–22(c)) for the members (or SRLY subgroups).

(4) *Offspring rule*. Paragraph (b)(2)(ii)(B) of this section applies to net operating losses arising in taxable years ending on or after June 25, 1999.

(5) *Waiver of carrybacks*. Paragraph (b)(3)(ii)(B) of this section (relating to the waiver of carrybacks for acquired members) applies to acquisitions occurring after June 25, 1999.

(6) *Prior periods*. For certain taxable years ending on or before June 25, 1999, see §1.1502–21T in effect prior to June 25, 1999, as contained in 26 CFR part 1 revised April 1, 1999, as applicable.

[T.D. 8823, 64 FR 36105, July 2, 1999; 64 FR 41784, Aug. 2, 1999, as amended by T.D. 8884, 65 FR 33759, May 25, 2000]

§1.1502–22 Consolidated capital gain and loss.

(a) *Capital gain*. The determinations under section 1222, including capital gain net income, net long-term capital gain, and net capital gain, with respect to members during consolidated return years are not made separately. Instead, consolidated amounts are determined for the group as a whole. The consolidated capital gain net income for any consolidated return year is determined by reference to—

(1) The aggregate gains and losses of members from sales or exchanges of capital assets for the year (other than gains and losses to which section 1231 applies);

(2) The consolidated net section 1231 gain for the year (determined under §1.1502–23); and

(3) The net capital loss carryovers or carrybacks to the year.

(b) *Net capital loss carryovers and carrybacks*—(1) *In general*. The determinations under section 1222, including net capital loss and net short-term capital loss, with respect to members during consolidated return years are not made separately. Instead, consolidated amounts are determined for the group as a whole. Losses included in the consolidated net capital loss may be carried to consolidated return years, and, after apportionment, may be carried to separate return years. The net capital loss carryovers and carrybacks consist of—

(i) Any consolidated net capital losses of the group; and

(ii) Any net capital losses of the members arising in separate return years.

(2) *Carryovers and carrybacks generally*. The net capital loss carryovers and carrybacks to a taxable year are determined under the principles of section 1212 and this section. Thus, losses

permitted to be absorbed in a consolidated return year generally are absorbed in the order of the taxable years in which they were sustained, and losses carried from taxable years ending on the same date, and which are available to offset consolidated capital gain net income, generally are absorbed on a pro rata basis. Additional rules provided under the Internal Revenue Code or regulations also apply, as well as the SRLY limitation under paragraph (c) of this section. See, e.g., section 382(l)(2)(B).

(3) *Carryovers and carrybacks of consolidated net capital losses to separate return years.* If any consolidated net capital loss that is attributable to a member may be carried to a separate return year under the principles of §1.1502–21(b)(2), the amount of the consolidated net capital loss that is attributable to the member is apportioned and carried to the separate return year (apportioned loss).

(4) *Special rules*—(i) *Short years in connection with transactions to which section 381(a) applies.* If a member distributes or transfers assets to a corporation that is a member immediately after the distribution or transfer in a transaction to which section 381(a) applies, the transaction does not cause the distributor or transferor to have a short year within the consolidated return year of the group in which the transaction occurred that is counted as a separate year for purposes of determining the years to which a net capital loss may be carried.

(ii) *Special status losses.* [Reserved]

(c) *Limitations on net capital loss carryovers and carrybacks from separate return limitation years.* The aggregate of the net capital losses of a member arising (or treated as arising) in SRLYs that are included in the determination of consolidated capital gain net income for all consolidated return years of the group under paragraph (a) of this section may not exceed the aggregate of the consolidated capital gain net income for all consolidated return years of the group determined by reference to only the member's items of gain and loss from capital assets as defined in section 1221 and trade or business assets defined in section 1231(b), including the member's losses actually absorbed by the group in the taxable year (whether or not absorbed by the member). The principles of §1.1502–21(c) (including the SRLY subgroup principles under §1.1502–21(c)(2)) apply with appropriate adjustments for purposes of applying this paragraph (c).

(d) *Coordination with respect to consolidated return change of ownership limitation occurring in consolidated return years beginning before January 1, 1997.* If a consolidated return change of ownership occurred before January 1, 1997, the principles of §1.1502–22A(d) apply to determine the amount of the aggregate of the net capital loss attributable to old members of the group (as those terms are defined in §1.1502–1(g)), that may be included in the net capital loss carryover under paragraph (b) of this section. For this purpose, §1.1502–1(g) is applied by treating that date as the end of the year of change.

(e) *Consolidated net capital loss.* Any excess of losses over gains, as determined under paragraph (a) of this section (without regard to any carryovers or carrybacks), is also referred to as the consolidated net capital loss.

(f) *Predecessors and successors.* For purposes of this section, the principles of §1.1502–21(f) apply with appropriate adjustments.

(g) *Overlap with section 383*—(1) *General rule.* The limitation provided in paragraph (c) of this section does not apply to net capital loss carryovers ((other than a hypothetical carryover like those described in §1.1502–21(c)(1)(i)(D) and a carryover like those described in §1.1502–21(c)(1)(ii)) when the application of paragraph (c) of this section results in an overlap with the application of section 383. For a similar rule applying in the case of net capital loss carryovers like those described in §§1.1502–21(c)(1)(i)(D) and (c)(1)(ii), see §1.1502–15(g).

(2) *Definitions*—(i) *Generally.* For purposes of this paragraph (g), the definitions and nomenclature contained in sections 382 and 383, the regulations thereunder, and §§1.1502–90 through 1.1502–99 apply.

(ii) *Overlap.* (A) An overlap of the application of paragraph (c) of this section and the application of section 383 with respect to a net capital loss carryover occurs if a corporation becomes a

member of the consolidated group (the SRLY event) within six months of the change date of an ownership change giving rise to a section 382 limitation with respect to that carryover (the section 383 event).

(B) If an overlap described in paragraph (g)(2)(ii)(A) of this section occurs with respect to net capital loss carryovers of a corporation whose SRLY event occurs within the six month period beginning on the date of a section 383 event, then an overlap is treated as also occurring with respect to that corporation's net capital loss carryover that arises within the period beginning with the section 383 event and ending with the SRLY event.

(C) For special rules in the event that there is a SRLY subgroup and/or a loss subgroup as defined in §1.1502–91(d)(1) with respect to a carryover, see paragraph (g)(4) of this section.

(3) *Operating rules*—(i) *Section 383 event before SRLY event.* If a SRLY event occurs on the same date as a section 383 event or within the six month period beginning on the date of the section 383 event, paragraph (g)(1) of this section applies beginning with the tax year that includes the SRLY event.

(ii) *SRLY event before section 383 event.* If a section 383 event occurs within the period beginning the day after the SRLY event and ending six months after the SRLY event, paragraph (g)(1) of this section applies starting with the first tax year that begins after the section 383 event.

(4) *Subgroup rules.* In general, in the case of a net capital loss carryover for which there is a SRLY subgroup and a loss subgroup (as defined in §1.1502–91(d)(1)), the principles of this paragraph (g) apply to the SRLY subgroup, and not separately to its members. However, paragraph (g)(1) of this section applies—

(i) With respect to a carryover described in paragraph (g)(2)(ii)(A) of this section only if—

(A) All members of the SRLY subgroup with respect to that carryover are also included in a loss subgroup with respect to that carryover; and

(B) All members of a loss subgroup with respect to that carryover are also members of a SRLY subgroup with respect to that carryover; and

(ii) With respect to a carryover described in paragraph (g)(2)(ii)(B) of this section only if all members of the SRLY subgroup for that carryover are also members of a SRLY subgroup that has net capital loss carryovers described in paragraph (g)(2)(ii)(A) of this section that are subject to the overlap rule of paragraph (g)(1) of this section.

(h) *Effective date*—(1) *In general.* This section generally applies to taxable years for which the due date (without extensions) of the consolidated return is after June 25, 1999. However—

(i) In the event that paragraph (g)(1) of this section does not apply to a particular net capital loss carryover in the current group, then solely for purposes of applying paragraph (c) of this section to determine a limitation with respect to that carryover and with respect to which the SRLY register (consolidated taxable income determined by reference to only the member's or subgroup's items of income, gain, deduction, or loss) began in a taxable year for which the due date of the return was on or before June 25, 1999, the principles of §1.1502–21(c)(2) shall be applied without regard to the phrase ''or for a carryover that was subject to the overlap rule described in paragraph (g) of this section or §1.1502–15(g) with respect to another group (the former group)''; and

(ii) For purposes of paragraph (g) of this section, only an ownership change to which section 383, as amended by the Tax Reform Act of 1986, applies and which results in a section 382 limitation shall constitute a section 383 event.

(2) *Prior periods.* For certain taxable years ending on or before June 25, 1999, see §1.1502–22T in effect prior to June 25, 1999, as contained in 26 CFR part 1 revised April 1, 1999, as applicable.

[T.D. 8823, 64 FR 36114, July 2, 1999]

§1.1502–23 Consolidated net section 1231 gain or loss.

(a) *In general.* Net section 1231 gains and losses of members arising during consolidated return years are not determined separately. Instead, the consolidated net section 1231 gain or loss is determined under this section for the group as a whole.

(b) *Example*. The following example illustrates the provisions of this section:

Example. Use of SRLY registers with net gains and net losses under section 1231. (i) In Year 1, T sustains a $20 net capital loss. At the beginning of Year 2, T becomes a member of the P group. T's capital loss carryover from Year 1 is subject to SRLY limits under § 1.1502–22(c). The members of the P group contribute the following to the consolidated taxable income for Year 2 (computed without regard to T's net capital loss carryover under § 1.1502–22):

	P	T
Year 1 (SRLY)		
Ordinary	.....	.....
Capital	.....	(20)
Year 2		
Ordinary	10	20
Capital	70	0
§ 1231	(60)	30

(ii) Under section 1231, if the section 1231 losses for any taxable year exceed the section 1231 gains for such taxable year, such gains and losses are treated as ordinary gains or losses. Because the P group's section 1231 losses, $(60), exceed the section 1231 gains, $30, the P group's net loss is treated as an ordinary loss. T's net section 1231 gain has the same character as the P group's consolidated net section 1231 loss, so T's $30 of section 1231 income is treated as ordinary income for purposes of applying § 1.1502–22(c). Under § 1.1502–22(c), the group's consolidated net capital gain determined by reference only to T's items is $0. None of T's capital loss carryover from Year 1 may be taken into account in Year 2.

(c) *Recapture of ordinary loss*. [Reserved]

(d) *Effective date*—(1) *In general*. This section applies to gains and losses arising in the determination of consolidated net section 1231 gain or loss for taxable years for which the due date (without extensions) of the consolidated return is after June 25, 1999.

(2) *Application to prior periods*. See § 1.1502–21(h)(3) for rules applicable to groups that applied the rules of this section to consolidated return years ending on or after January 29, 1991, and beginning before January 1, 1997.

[T.D. 8823, 64 FR 36115, July 2, 1999; 64 FR 41784, Aug. 2, 1999]

§ 1.1502–24 Consolidated charitable contributions deduction.

(a) *Determination of amount of consolidated charitable contributions deduction*. The deduction allowed by section 170 for the taxable year shall be the lesser of:

(1) The aggregate deductions of the members of the group allowable under section 170 (determined without regard to section 170(b)(2)), plus the consolidated charitable contribution carryovers to such year, or

(2) Five percent of the adjusted consolidated taxable income as determined under paragraph (c) of this section.

(b) *Carryover of excess charitable contributions*. The consolidated charitable contribution carryovers to any consolidated return year shall consist of any excess consolidated charitable contributions of the group, plus any excess charitable contributions of members of the group arising in separate return years of such members, which may be carried over to the taxable year under the principles of section 170(b) (2) and (3). However, such consolidated carryovers shall not include any excess charitable contributions apportioned to a corporation for a separate return year pursuant to paragraph (e) of § 1.1502–79.

(c) *Adjusted consolidated taxable income*. For purposes of this section, the adjusted consolidated taxable income of the group for any consolidated return year shall be the consolidated taxable income computed without regard to this section, section 242, section 243(a) (2) and (3), § 1.1502–25, § 1.1502–26, and § 1.1502–27, and without regard to any consolidated net operating or net capital loss carrybacks to such year.

[T.D. 6894, 31 FR 11794, Sept. 8, 1966]

§ 1.1502–26 Consolidated dividends received deduction.

(a) *In general*. (1) The consolidated dividends received deduction for the taxable year shall be the lesser of:

(i) The aggregate of the deduction of the members of the group allowable under sections 243(a)(1), 244(a), and 245 (computed without regard to the limitations provided in section 246(b)), or

(ii) 85 percent of the consolidated taxable income computed without regard to the consolidated net operating loss deduction, consolidated section 247 deduction, the consolidated dividends received deduction, and any consolidated net capital loss carryback to the taxable year.

Subdivision (ii) of this subparagraph shall not apply for any consolidated return year for which there is a consolidated net operating loss. (See §§1.1502–21(e) or 1.1502–21A(f), as appropriate for the definition of a consolidated net operating loss.)

(2) If any member computes a deduction under section 593(b)(2) for a taxable year beginning after July 11, 1969, and ending before August 30, 1975, the deduction otherwise computed under this section shall be reduced by an amount determined by multiplying the deduction (determined without regard to this sentence and without regard to dividends received by the common parent if such parent does not use the percentage of income method provided by section 593(b)(2)) by the applicable percentage of the member with the highest applicable percentage (determined under subparagraphs (A) and (B) of section 593(b)(2)).

(3) For taxable years ending on or after August 30, 1975, the deduction otherwise computed under this section shall be reduced by the sum of the amounts determined under paragraph (a)(4) of this section for each member that is a thrift institution that computes a deduction under section 593(b)(2).

(4) For each thrift institution, the amount determined under this subparagraph is the product of:

(i) The portion of the deduction determined with regard to the sum of the dividends received by: (A) The thrift institution, and (B) any member in which that thrift institution owns, directly and with the application of paragraph (a)(5) of this section, 5 percent or more of the stock on any day during the consolidated return year, and

(ii) The thrift institution's applicable percentage determined under subparagraphs (A) and (B) of section 593(b)(2).

For purposes of this subparagraph, dividends allocated to a thrift institution under §1.596–1(c) shall be considered received by the thrift institution.

(5) For purposes of paragraph (a)(4)(i) of this section, a member owning stock of another member (the ''second member'') shall be considered as owning its proportionate share of any stock of a member owned by the second member. Stock considered as being owned by reason of the preceding sentence shall, for purposes of applying that sentence, be treated as actually owned. The proportionate share of stock in a member owned by another member is the proportion which the value of the stock so owned bears to the value of all the outstanding stock in the member. For purposes of this paragraph the term ''stock'' includes nonvoting stock which is limited and preferred as to dividends.

(6) For purposes of paragraph (a)(4)(i) of this section, if two or more thrift institutions that are both members of the group each owns 5 percent or more of the same member's stock, the member's stock will be considered to be owned only by the thrift institution with the highest applicable percentage.

(b) *Intercompany dividends*. The deduction determined under paragraph (a) of this section is determined without taking into account intercompany dividends to the extent that, under §1.1502–13(f)(2), they are not included in gross income. See §1.1502–13 for additional rules relating to intercompany dividends.

(c) *Examples*. The provisions of this section may be illustrated by the following examples:

Example (1). Corporations P, S, and S–1 filed a consolidated return for the calendar year 1966 showing consolidated taxable income of $100,000 (determined without regard to the consolidated net operating loss deduction, consolidated dividends received deduction, and the consolidated section 247 deduction). Such corporations received dividends during such year from nonmember domestic corporations as follows:

	Dividends
Corporation:	
P	$6,000
S	10,000
S–1	34,000
Total	50,000

The dividends received deduction allowable to each member under section 243(a)(1) (computed without regard to the limitation in section 246(b)) is as follows: P has $5,100 (85 percent of $6,000), S has $8,500 (85 percent of $10,000), and S–1 has $28,900 (85 percent of $34,000), or a total of $42,500. Since $42,500 is less than $85,000 (85 percent of $100,000), the consolidated dividends received deduction is $42,500.

Example (2). Assume the same facts as in example (1) except that consolidated taxable income (computed without regard to the consolidated net operating loss deduction, consolidated dividends received deduction, and the consolidated section 247 deduction) was $40,000. The aggregate of the dividends received deductions, $42,500, computed without regard to section 246(b), results in a consolidated net operating loss of $2,500. See section 172(d)(6). Therefore, paragraph (a)(2) of this section does not apply and the consolidated dividends received deduction is $42,500.

[T.D. 6894, 31 FR 11794, Sept. 8, 1966, as amended by T.D. 7631, 44 FR 40497, July 11, 1979; T.D. 8597, 60 FR 36710, July 18, 1995; T.D. 8677, 61 FR 33323, June 27, 1996; T.D. 8823, 64 FR 36099, July 2, 1999]

§ 1.1502–27 Consolidated section 247 deduction.

(a) *Amount of deduction.* The consolidated section 247 deduction for the taxable year shall be an amount computed as follows:

(1) First, determine the amount which is the lesser of:

(i) The aggregate of the dividends paid (within the meaning of section 247(a)) during such year by members of the group which are public utilities (within the meaning of section 247(b)(1)) on preferred stock (within the meaning of section 247(b)(2)), other than dividends paid to other members of the group, or

(ii) The aggregate of the taxable income (or loss) (as determined under paragraph (b) of this section) of each such member which is a public utility.

(2) Then, multiply the amount determined under subparagraph (1) of this paragraph by the fraction specified in section 247(a)(2).

(b) *Computation of taxable income.* For purposes of paragraph (a)(1)(ii) of this section, the taxable income (or loss) of a member of the group described in paragraph (a)(1)(i) shall be determined under § 1.1502–12, adjusted for the following items taken into account in the computation of consolidated taxable income:

(1) The portion of the consolidated net operating loss deduction, the consolidated charitable contributions deduction, and the consolidated dividends received deduction, attributable to such member;

(2) Such member's capital gain net income (net capital gain for taxable years beginning before January 1, 1977) (determined without regard to any net capital loss carryover or carryback attributable to such member);

(3) Such member's net capital loss and section 1231 net loss, reduced by the portion of the consolidated net capital loss attributable to such member; and

(4) The portion of any consolidated net capital loss carryover or carryback attributable to such member which is absorbed in the taxable year.

[T.D. 6894, 31 FR 11794, Sept. 8, 1966, as amended by T.D. 7728, 45 FR 72650, Nov. 3, 1980]

BASIS, STOCK OWNERSHIP, AND EARNINGS AND PROFITS RULES

§ 1.1502–30 Stock basis after certain triangular reorganizations.

(a) *Scope.* This section provides rules for determining the basis of the stock of an acquiring corporation as a result of a triangular reorganization. The definitions and nomenclature contained in § 1.358–6 apply to this section.

(b) *General rules*—(1) *Forward triangular merger, triangular C reorganization, or triangular B reorganization. P* adjusts its basis in the stock of S as a result of a forward triangular merger, triangular C reorganization, or triangular B reorganization under § 1.358–6(c) and (d), except that § 1.358–6 (c)(1)(ii) and (d)(2) do not apply. Instead, *P* adjusts such basis by taking into account the full amount of—

(i) *T* liabilities assumed by *S* or the amount of liabilities to which the *T* assets acquired by *S* are subject, and

(ii) The fair market value of any consideration not provided by *P* pursuant to the plan of reorganization.

(2) *Reverse triangular merger.* If *P* adjusts its basis in the *T* stock acquired as a result of a reverse triangular merger under § 1.358–6 (c)(2)(i) and (d),

§ 1.358–6 (c)(1)(ii) and (d)(2) do not apply. Instead, *P* adjusts such basis by taking into account the full amount of—

(i) *T* liabilities deemed assumed by *S* or the amount of liabilities to which the *T* assets deemed acquired by *S* are subject, and

(ii) The fair market value of any consideration not provided by *P* pursuant to the plan of reorganization.

(3) *Excess loss accounts*. Negative adjustments under this section may exceed *P*'s basis in its *S* or *T* stock. The resulting negative amount is *P*'s excess loss account in its *S* or *T* stock. See § 1.1502–19 for rules treating excess loss accounts as negative basis, and treating references to stock basis as including references to excess loss accounts.

(4) *Application of other rules of law*. The rules for this section are in addition to other rules of law. See § 1.1502–80(d) for the non-application of section 357(c) to *P*.

(5) *Examples*. The rules of this paragraph (b) are illustrated by the following examples. For purposes of these examples, *P*, *S*, and *T* are domestic corporations, *P* and *S* file consolidated returns, *P* owns all of the only class of *S* stock, the *P* stock exchanged in the transaction satisfies the requirements of the applicable triangular reorganization provisions, the facts set forth the only corporate activity, and tax liabilities are disregarded.

Example 1. Liabilities.(a) *Facts*. *T* has assets with an aggregate basis of $60 and fair market value of $100. *T*'s assets are subject to $70 of liabilities. Pursuant to a plan, *P* forms *S* with $5 of cash (which S retains), and *T* merges into *S*. In the merger, the *T* shareholders receive *P* stock worth $30 in exchange for their *T* stock. The transaction is a reorganization to which sections 368 (a)(1)(A) and (a)(2)(D) apply.

(b) *Basis adjustment*. Under § 1.358–6, *P* adjusts its $5 basis in the *S* stock as if *P* had acquired the *T* assets with a carryover basis under section 362 and transferred these assets to *S* in a transaction in which *P* determines its basis in the *S* stock under section 358. Under the rules of this section, the limitation described in § 1.358–6(c)(1)(ii) does not apply. Thus, *P* adjusts its basis in the *S* stock by –$10 (the aggregate adjusted basis of *T*'s assets decreased by the amount of liabilities to which the *T* assets are subject). Consequently, as a result of the reorganization, *P* has an excess loss account of $5 in its *S* stock.

Example 2. Consideration not provided by P. (a) *Facts*. *T* has assets with an aggregate basis of $10 and fair market value of $100 and no liabilities. *S* is an operating company with substantial assets that has been in existence for several years. *P* has a $5 basis in its *S* stock. Pursuant to a plan, *T* merges into *S* and the *T* shareholders receive $70 of *P* stock provided by *P* pursuant to the plan of reorganization and $30 of cash provided by *S* in exchange for their *T* stock. The transaction is a reorganization to which sections 368 (a)(1)(A) and (a)(2)(D) apply.

(b) *Basis adjustment*. Under § 1.358–6, *P* adjusts its $5 basis in the *S* stock as if *P* had acquired the *T* assets with a carryover basis under section 362 and transferred these assets to *S* in a transaction in which *P* determines its basis in the *S* stock under section 358. Under the rules of this section, the limitation described in § 1.358–6(d)(2) does not apply. Thus, *P* adjusts its basis in the *S* stock by –$20 (the aggregate adjusted basis of *T*'s assets decreased by the fair market value of the consideration provided by *S*). As a result of the reorganization, *P* has an excess loss account of $15 in its *S* stock.

(c) *Appreciated asset*. The facts are the same as in paragraph (a) of this *Example 2*, except that in the reorganization *S* provides an asset with a $20 adjusted basis and $30 fair market value instead of $30 cash. The basis is adjusted in the same manner as in paragraph (b) of this *Example 2*. In addition, because *S* recognizes a $10 gain from the asset under section 1001, *P*'s basis in its *S* stock is increased under § 1.1502–32(b) by *S*'s $10 gain. Consequently, as a result of the reorganization, *P* has an excess loss account of $5 in its *S* stock. (The results would be the same if the appreciated asset provided by *S* was *P* stock with respect to which *S* recognized gain. See § 1.1032–2(c)).

Example 3. Reverse triangular merger. (a) *Facts*. *T* has assets with an aggregate basis of $60 and fair market value of $100. *T*'s assets are subject to $70 of liabilities. *P* owns all of the only class of *S* stock. *P* has a $5 basis in its *S* stock. Pursuant to a plan, *S* merges into *T* with *T* surviving. In the merger, the *T* shareholders exchange their *T* stock for $2 cash from *P* and $28 worth of *P* stock provided by *P* pursuant to the plan. The transaction is a reorganization to which sections 368 (a)(1)(A) and (a)(2)(E) apply.

(b) *Basis adjustment*. Under § 1.358–6, *P*'s basis in the *T* stock acquired equals its $5 basis in its *S* stock immediately before the transaction adjusted by the $60 basis in the *T* assets deemed transferred, and the $70 of liabilities to which the *T* assets are subject. Under the rules of this section, the limitation described in § 1.358–6(c)(1)(ii) does not apply. Consequently, *P* has an excess loss account of $5 in its *T* stock as a result of the transaction.

(c) *Effective date.* This section applies to reorganizations occurring on or after December 21, 1995.

[T.D. 8648, 60 FR 66082, Dec. 21, 1995]

§ 1.1502–31 Stock basis after a group structure change.

(a) *In general*—(1) *Overview.* If one corporation (P) succeeds another corporation (T) under the principles of § 1.1502–75(d) (2) or (3) as the common parent of a consolidated group in a group structure change, the basis of members in the stock of the former common parent (or the stock of a successor) is adjusted or determined under this section. See § 1.1502–33(f)(1) for the definition of group structure change. For example, if P owns all of the stock of another corporation (S), and T merges into S in a group structure change that is a reorganization described in section 368(a)(2)(D) in which P becomes the common parent of the T group, P's basis in S's stock must be adjusted to reflect the change in S's assets and liabilities. The rules of this section coordinate with the earnings and profits adjustments required under § 1.1502–33(f)(1), generally conforming the results of transactions in which the T group continues under § 1.1502–75 with P as the common parent. By preserving in P the relationship between T's earnings and profits and asset basis, these adjustments limit possible distortions under section 1502 (e.g., in the deconsolidation rules for earnings and profits under § 1.1502–33(e), and the continued filing requirements under § 1.1502–75(a)). This section applies whether or not T continues to exist after the group structure change.

(2) *Application of other rules of law.* The rules of this section are in addition to other rules of law. The provisions of this section and other rules of law must not have the effect of duplicating an amount in P's basis in S's stock.

(b) *General rules.* Except as otherwise provided in this section—

(1) *Asset acquisitions.* If a corporation acquires the former common parent's assets (and any liabilities assumed or to which the assets are subject) in a group structure change, the basis of members in the stock of the acquiring corporation is adjusted immediately after the group structure change to reflect the acquiring corporation's allocable share of the former common parent's net asset basis as determined under paragraph (c) of this section. For example, if S acquires all of T's assets in a group structure change that is a reorganization described in section 368(a)(2)(D), P's basis in S's stock is adjusted to reflect T's net asset basis. If P owned some of T's stock before the group structure change, the results would be the same because P's basis in the T stock is not taken into account in determining P's basis in S's stock. If T's net asset basis is a negative amount, it reduces P's basis in S's stock and, if the reduction exceeds P's basis in S's stock, the excess is P's excess loss account in S's stock. See § 1.1502–19 for rules treating P's excess loss account as negative basis, and treating a reference to P's basis in S's stock as including an excess loss account.

(2) *Stock acquisitions.* If a corporation acquires stock of the former common parent in a group structure change, the basis of the members in the former common parent's stock immediately after the group structure change (including any stock of the former common parent owned before the group structure change) is redetermined in accordance with the results for an asset acquisition described in paragraph (b)(1) of this section. For example, if all of T's stock is contributed to P in a group structure change to which section 351 applies, P's basis in T's stock is T's net asset basis, rather than the amount determined under section 362. Similarly, if S merges into T in a group structure change described in section 368(a)(2)(E), P's basis in T's stock is the basis that P would have in S's stock under paragraph (b)(1) of this section if T had merged into S in a group structure change described in section 368(a)(2)(D).

(c) *Net asset basis.* The former common parent's net asset basis is the basis it would have in the stock of a newly formed subsidiary, if—

(1) The former common parent transferred its assets (and any liabilities assumed or to which the assets are subject) to the subsidiary in a transaction to which section 351 applies;

(2) The former common parent and the subsidiary were members of the same consolidated group (see §1.1502–80(d) for the non-application of section 357(c) to the transfer); and

(3) The asset basis taken into account is each asset's basis immediately after the group structure change (e.g., taking into account any income or gain recognized in the group structure change and reflected in the asset's basis).

(d) *Additional adjustments.* In addition to the adjustments in paragraph (b) of this section, the following adjustments are made:

(1) *Consideration not provided by P.* The basis is reduced to reflect the fair market value of any consideration not provided by the member. For example, if S acquires T's assets in a group structure change described in section 368(a)(2)(D), and S provides an appreciated asset (e.g., stock of P) as partial consideration in the transaction, P's basis in S's stock is reduced by the fair market value of the asset.

(2) *Allocable share*—(i) *Asset acquisitions.* If a corporation receives less than all of the former common parent's assets and liabilities in the group structure change, the former common parent's net asset basis taken into account under paragraph (b)(1) of this section is adjusted accordingly.

(ii) *Stock acquisitions.* If a corporation owns less than all of the former common parent's stock immediately after a group structure change described in paragraph (b)(2) of this section, the percentage of the former common parent's net asset basis taken into account equals the percentage (by fair market value) of the former common parent's stock owned immediately after the group structure change. For example, if P owns less than all of the former common parent's stock immediately after the group structure change, only an allocable part of the basis determined under this section is reflected in the shares owned by P (and the amount allocable to shares owned by nonmembers has no effect on the basis of their shares).

(3) *Allocation among shares of stock.* The basis determined under this section is allocated among shares under the principles of section 358. For example, if P owns multiple classes of the former common parent's stock immediately after the group structure change, only an allocable part of the basis determined under this section is reflected in the basis of each share. See §1.1502–19(d), for special allocations with respect to excess loss accounts.

(4) *Higher-tier members.* To the extent that the former common parent is owned by members other than the new common parent, the basis of members in the stock of all subsidiaries owning, directly or indirectly, in whole or in part, an interest in the former common parent's assets or liabilities is adjusted in accordance with the principles of this section. The adjustments are applied in the order of the tiers, from the lowest to the highest.

(e) *Waiver of loss carryovers of former common parent* —(1) *General rule.* An irrevocable election may be made to treat all or any portion of a loss carryover attributable to the common parent as expiring for all Federal income tax purposes immediately before the group structure change. Thus, if the loss carryover is treated as expiring under the election, it will not result in a negative adjustment to the basis of P's stock under §1.1502–32(b).

(2) *Election.* The election described in this paragraph (e) must be made in a separate statement entitled ''ELECTION TO TREAT LOSS CARRYOVER AS EXPIRING UNDER §1.1502–31(e).'' The statement must be filed with the consolidated group's return for the year that includes the group structure change, and it must be signed by the former and the new common parent. The statement must identify the amount of each loss carryover deemed to expire (or the amount of each loss carryover deemed not to expire, with any balance of any loss carryovers being deemed to expire).

(f) *Predecessors and successors.* For purposes of this section, any reference to a corporation includes a reference to a successor or predecessor as the context may require. See §1.1502–32(f) for definitions of predecessor and successor.

(g) *Examples.* For purposes of the examples in this section, unless otherwise stated, all corporations have only one class of stock outstanding, the tax

year of all persons is the calendar year, all persons use the accrual method of accounting, the facts set forth the only corporate activity, all transactions are between unrelated persons, and tax liabilities are disregarded. The principles of this section are illustrated by the following examples.

Example 1. Forward triangular merger. (a) *Facts.* P is the common parent of one group and T is the common parent of another. T has assets with an aggregate basis of $60 and fair market value of $100 and no liabilities. T's shareholders have an aggregate basis of $50 in T's stock. In Year 1, pursuant to a plan, P forms S and T merges into S with the T shareholders receiving $100 of P stock in exchange for their T stock. The transaction is a reorganization described in section 368(a)(2)(D). The transaction is also a reverse acquisition under §1.1502- 75(d)(3) because the T shareholders, as a result of owning T's stock, own more than 50% of the value of P's stock immediately after the transaction. Thus, the transaction is a group structure change under §1.1502–33(f)(1), and P's earnings and profits are adjusted to reflect T's earnings and profits immediately before T ceases to be the common parent of the T group.

(b) *Analysis.* Under paragraph (b)(1) of this section, P's basis in S's stock is adjusted to reflect T's net asset basis. Under paragraph (c) of this section, T's net asset basis is $60, the basis T would have in the stock of a subsidiary under section 358 if T had transferred all of its assets and liabilities to the subsidiary in a transaction to which section 351 applies. Thus, P has a $60 basis in S's stock.

(c) *Pre-existing S.* The facts are the same as in paragraph (a) of this *Example 1,* except that P has owned the stock of S for several years and P has a $50 basis in the S stock before the merger with T. Under paragraph (b)(1) of this section, P's $50 basis in S's stock is adjusted to reflect T's net asset basis. Thus, P's basis in S's stock is $110 ($50 plus $60).

(d) *Excess loss account included in former common parent's net asset basis.* The facts are the same as in paragraph (a) of this *Example 1,* except that T has two assets, an operating asset with an $80 basis and $90 fair market value, and stock of a subsidiary with a $20 excess loss account and $10 fair market value. Under paragraph (c) of this section, T's net asset basis is $60 ($80 minus $20). See sections 351 and 358, and §1.1502–19. Consequently, P has a $60 basis in S's stock. Under section 362 and §1.1502–19, S has an $80 basis in the operating asset and a $20 excess loss account in the stock of the subsidiary.

(e) *Liabilities in excess of basis.* The facts are the same as in paragraph (a) of this *Example 1,* except that T's assets have a fair market value of $170 (and $60 basis) and are subject to $70 of liabilities. Under paragraph (c) of this section, T's net asset basis is ($10) ($60 minus $70). See sections 351 and 358, and §§1.1502–19 and 1.1502–80(d). Thus, P has a $10 excess loss account in S's stock. Under section 362, S has a $60 basis in its assets (which are subject to $70 of liabilities). (Under paragraph (a)(2) of this section, because the liabilities are taken into account in determining net asset basis under paragraph (c) of this section, the liabilities are not also taken into account as consideration not provided by P under paragraph (d)(1) of this section.)

(f) *Consideration provided by S.* The facts are the same as in paragraph (a) of this *Example 1,* except that P forms S with a $100 contribution at the beginning of Year 1, and during Year 6, pursuant to a plan, S purchases $100 of P stock and T merges into S with the T shareholders receiving P stock in exchange for their T stock. Under paragraph (b)(1) of this section, P's $100 basis in S's stock is increased by $60 to reflect T's net asset basis. Under paragraph (d)(1) of this section, P's basis in S's stock is decreased by $100 (the fair market value of the P stock) because the P stock purchased by S and used in the transaction is consideration not provided by P.

(g) *Appreciated asset provided by S.* The facts are the same as in paragraph (a) of this *Example 1,* except that P has owned the stock of S for several years, and the shareholders of T receive $60 of P stock and an asset of S with a $30 adjusted basis and $40 fair market value. S recognizes a $10 gain from the asset under section 1001. Under paragraph (b)(1) of this section, P's basis in S's stock is increased by $60 to reflect T's net asset basis. Under paragraph (d)(1) of this section, P's basis in S's stock is decreased by $40 (the fair market value of the asset provided by S). In addition, P's basis in S's stock is increased under §1.1502–32(b) by S's $10 gain.

(h) *Depreciated asset provided by S.* The facts are the same as in paragraph (a) of this *Example 1,* except that P has owned the stock of S for several years, and the shareholders of T receive $60 of P stock and an asset of S with a $50 adjusted basis and $40 fair market value. S recognizes a $10 loss from the asset under section 1001. Under paragraph (b)(1) of this section, P's basis in S's stock is increased by $60 to reflect T's net asset basis. Under paragraph (d)(1) of this section, P's basis in S's stock is decreased by $40 (the fair market value of the asset provided by S). In addition, S's $10 loss is taken into account under §1.1502–32(b) in determining P's basis adjustments under that section.

Example 2. Stock acquisition. (a) *Facts.* P is the common parent of one group and T is the common parent of another. T has assets with an aggregate basis of $60 and fair market

value of $100 and no liabilities. T's shareholders have an aggregate basis of $50 in T's stock. Pursuant to a plan, P forms S and S acquires all of T's stock in exchange for P stock in a transaction described in section 368(a)(1)(B). The transaction is also a reverse acquisition under §1.1502–75(d)(3). Thus, the transaction is a group structure change under §1.1502–33(f)(1), and the earnings and profits of P and S are adjusted to reflect T's earnings and profits immediately before T ceases to be the common parent of the T group.

(b) *Analysis*. Under paragraph (d)(4) of this section, although S is not the new common parent of the T group, adjustments must be made to S's basis in T's stock in accordance with the principles of this section. Although S's basis in T's stock would ordinarily be determined under section 362 by reference to the basis of T's shareholders in T's stock immediately before the group structure change, under the principles of paragraph (b)(2) of this section, S's basis in T's stock is determined by reference to T's net asset basis. Thus, S's basis in T's stock is $60.

(c) *Higher-tier adjustments*. Under paragraph (d)(4) of this section, P's basis in S's stock is adjusted to $60 (to be consistent with the adjustment to S's basis in T's stock).

(d) *Cross ownership*. The facts are the same as in paragraph (a) of this *Example 2*, except that S has owned 10% of T's stock for several years and, pursuant to the plan, S acquires the remaining 90% of T's stock in exchange for P stock. The results are the same as in paragraphs (b) and (c) of this *Example 2*, because S's basis in the initial 10% of T's stock is redetermined under this section.

(e) *Allocable share*. The facts are the same as in paragraph (a) of this *Example 2*, except that P owns only 90% of S's stock immediately after the group structure change. S's basis in T's stock is the same as in paragraph (b) of this *Example 2*. Under paragraph (d)(2) of this section, P's basis in its S stock is adjusted to $54 (90% of S's $60 adjustment).

Example 3. Taxable stock acquisition. (a) *Facts*. P is the common parent of one group and T is the common parent of another. T has assets with an aggregate basis of $60 and fair market value of $100 and no liabilities. T's shareholders have an aggregate basis of $50 in T's stock. Pursuant to a plan, P acquires all of T's stock in exchange for $70 of P's stock and $30 in a transaction that is a group structure change under §1.1502–33(f)(1). P's acquisition of T's stock is a taxable transaction. (Because of P's use of cash, the acquisition is not a transaction described in section 368(a)(1)(B).)

(b) *Analysis*. Under paragraph (b)(2) of this section, P's basis in T's stock is adjusted to reflect T's net asset basis. Thus, although P's basis in T's stock would ordinarily be a cost basis of $100, P's basis in T's stock under this section is $60.

(h) *Effective date*—(1) *General rule*. This section applies to group structure changes occurring in consolidated return years beginning on or after January 1, 1995.

(2) *Prior law*. For prior years, see prior regulations under section 1502 as in effect with respect to the transaction. See, e.g., §1.1502–31T as contained in the 26 CFR part 1 edition revised as of April 1, 1994.

[T.D. 8560, 59 FR 41683, Aug. 15, 1994]

§ 1.1502–32 Investment adjustments.

(a) *In general*—(1) *Purpose*. This section provides rules for adjusting the basis of the stock of a subsidiary (S) owned by another member (P). These rules modify the determination of P's basis in S's stock under applicable rules of law by adjusting P's basis to reflect S's distributions and S's items of income, gain, deduction, and loss taken into account for the period that S is a member of the consolidated group. The purpose of the adjustments is to treat P and S as a single entity so that consolidated taxable income reflects the group's income. For example, if P forms S with a $100 contribution, and S takes into account $10 of income, P's $100 basis in S's stock under section 358 is increased by $10 under this section to prevent S's income from being taken into account a second time on P's disposition of S's stock. Comparable adjustments are made for tax-exempt income and noncapital, nondeductible expenses that S takes into account, to preserve their treatment under the Internal Revenue Code.

(2) *Application of other rules of law*. The rules of this section are in addition to other rules of law. See, e.g., section 358 (basis determinations for distributees), section 1016 (adjustments to basis), §1.1502–11(b) (limitations on the use of losses), §1.1502–19 (treatment of excess loss accounts), §1.1502–20 (additional rules relating to stock loss), and §1.1502–31 (basis after a group structure change). P's basis in S's stock must not be adjusted under this section and other rules of law in a manner that has the effect of duplicating an adjustment. See also paragraph (h)(5) of this section for basis reductions applicable to certain former subsidiaries.

(3) *Overview*—(i) *In general*. The amount of the stock basis adjustments and their timing are determined under paragraph (b) of this section. Under paragraph (c) of this section, the amount of the adjustment is allocated among the shares of S's stock. Paragraphs (d) through (g) of this section provide definitions, an anti-avoidance rule, successor rules, and recordkeeping requirements.

(ii) *Excess loss account*. Negative adjustments under this section may exceed P's basis in S's stock. The resulting negative amount is P's excess loss account in S's stock. See §1.1502–19 for rules treating excess loss accounts as negative basis, and treating references to stock basis as including references to excess loss accounts.

(iii) *Tiering up of adjustments*. The adjustments to S's stock under this section are taken into account in determining adjustments to higher-tier stock. The adjustments are applied in the order of the tiers, from the lowest to the highest. For example, if P is also a subsidiary, P's adjustment to S's stock is taken into account in determining the adjustments to stock of P owned by other members.

(b) *Stock basis adjustments*—(1) *Timing of adjustments*—(i) *In general*. Adjustments under this section are made as of the close of each consolidated return year, and as of any other time (an interim adjustment) if a determination at that time is necessary to determine a tax liability of any person. For example, adjustments are made as of P's sale of S's stock in order to measure P's gain or loss from the sale, and if P's interest in S's stock is not uniform throughout the year (e.g., because P disposes of a portion of its S stock, or S issues additional shares to another person), the adjustments under this section are made by taking into account the varying interests. An interim adjustment may be necessary even if tax liability is not affected until a later time. For example, if P sells only 50% of S's stock and S becomes a nonmember, adjustments must be made for the retained stock as of the disposition (whether or not P has an excess loss account in that stock). Similarly, if S liquidates during a consolidated return year, adjustments must be made as of the liquidation (even if the liquidation is tax free under section 332).

(ii) *Allocation of items*. If §1.1502–76(b) applies to S for purposes of an adjustment before the close of the group's consolidated return year, the amount of the adjustment is determined under that section. If §1.1502–76(b) does not apply to the interim adjustment, the adjustment is determined under the principles of §1.1502–76(b), consistently applied, and ratable allocation under the principles of §1.1502–76(b)(2)(ii) or (iii) may be used without filing an election under §1.1502–76(b)(2). The principles would apply, for example, if P becomes a nonmember but S remains a member.

(2) *Amount of adjustments*. P's basis in S's stock is increased by positive adjustments and decreased by negative adjustments under this paragraph (b)(2). The amount of the adjustment, determined as of the time of the adjustment, is the net amount of S's—

(i) Taxable income or loss;

(ii) Tax-exempt income;

(iii) Noncapital, nondeductible expenses; and

(iv) Distributions with respect to S's stock.

(3) *Operating rules*. For purposes of determining P's adjustments to the basis of S's stock under paragraph (b)(2) of this section—

(i) *Taxable income or loss*. S's taxable income or loss is consolidated taxable income (or loss) determined by including only S's items of income, gain, deduction, and loss taken into account in determining consolidated taxable income (or loss), treating S's deductions and losses as taken into account to the extent they are absorbed by S or any other member. For this purpose:

(A) To the extent that S's deduction or loss is absorbed in the year it arises or is carried forward and absorbed in a subsequent year (e.g., under section 172, 465, or 1212), the deduction or loss is taken into account under paragraph (b)(2) of this section in the year in which it is absorbed.

(B) To the extent that S's deduction or loss is carried back and absorbed in a prior year (whether consolidated or separate), the deduction or loss is taken into account under paragraph

(b)(2) of this section in the year in which it arises and not in the year in which it is absorbed.

(ii) *Tax-exempt income*—(A) *In general.* S's tax-exempt income is its income and gain which is taken into account but permanently excluded from its gross income under applicable law, and which increases, directly or indirectly, the basis of its assets (or an equivalent amount). For example, S's dividend income to which §1.1502–13(f)(2)(ii) applies, and its interest excluded from gross income under section 103, are treated as tax-exempt income. However, S's income not recognized under section 1031 is not treated as tax- exempt income because the corresponding basis adjustments under section 1031(d) prevent S's nonrecognition from being permanent. Similarly, S's tax-exempt income does not include gain not recognized under section 332 from the liquidation of a lower-tier subsidiary, or not recognized under section 118 or section 351 from a transfer of assets to S.

(B) *Equivalent deductions.* To the extent that S's taxable income or gain is permanently offset by a deduction or loss that does not reduce, directly or indirectly, the basis of S's assets (or an equivalent amount), the income or gain is treated as tax-exempt income and is taken into account under paragraph (b)(3)(ii)(A) of this section. In addition, the income and the offsetting item are taken into account under paragraph (b)(3)(i) of this section. For example, if S receives a $100 dividend with respect to which a $70 dividends received deduction is allowed under section 243, $70 of the dividend is treated as tax-exempt income. Accordingly, P's basis in S's stock increases by $100 because the $100 dividend and $70 deduction are taken into account under paragraph (b)(3)(i) of this section (resulting in $30 of the increase), and $70 of the dividend is also taken into account under paragraph (b)(3)(ii)(A) of this section as tax-exempt income (resulting in $70 of the increase). (See paragraph (b)(3)(iii) of this section if there is a corresponding negative adjustment under section 1059.) Similarly, income from mineral properties is treated as tax-exempt income to the extent it is offset by deductions for depletion in excess of the basis of the property.

(C) *Discharge of indebtedness income*—(*1*) *In general.* Discharge of indebtedness income of S that is excluded from gross income under section 108 is treated as tax-exempt income only to the extent the discharge is applied to reduce tax attributes (e.g., under section 108 or 1017). Discharge of S's indebtedness is treated as applied to reduce tax attributes only to the extent the attribute reduction is taken into account as a reduction under paragraph (b)(3)(iii) of this section.

(*2*) *Expired loss carryovers.* If the amount of the discharge exceeds the amount of the attribute reduction, the excess is nevertheless treated as applied to reduce tax attributes to the extent a loss carryover expired without tax benefit, the expiration was taken into account as a noncapital, nondeductible expense under paragraph (b)(3)(iii) of this section, and the loss carryover would have been reduced had it not expired.

(D) *Basis shifts.* An increase in the basis of S's assets (or an equivalent as described in paragraph (b)(3)(iv)(B) of this section) is treated as tax-exempt income to the extent that the increase is not otherwise taken into account in determining stock basis, it corresponds to a negative adjustment that is taken into account by the group under this paragraph (b) (or incurred by the common parent), and it has the effect (viewing the group in the aggregate) of a permanent recovery of the reduction. For example, S's basis increase under section 50(c)(2) is treated as tax-exempt income to the extent the preceding basis reduction under section 50(c)(1) is reflected in the basis of a member's stock. On the other hand, if S increases the basis of an asset as the result of an accounting method change, and the related positive section 481(a) adjustment is taken into account over time, the basis increase is not treated as tax-exempt income.

(iii) *Noncapital, nondeductible expenses*—(A) *In general.* S's noncapital, nondeductible expenses are its deductions and losses that are taken into account but permanently disallowed or eliminated under applicable law in determining its taxable income or loss,

and that decrease, directly or indirectly, the basis of its assets (or an equivalent amount). For example, S's Federal taxes described in section 275 and loss not recognized under section 311(a) are noncapital, nondeductible expenses. Similarly, if a loss carryover (e.g., under section 172 or 1212) attributable to S expires or is reduced under section 108(b), it becomes a noncapital, nondeductible expense at the close of the last tax year to which it may be carried. However, if S sells and repurchases a security subject to section 1091, the disallowed loss is not a noncapital, nondeductible expense because the corresponding basis adjustments under section 1091(d) prevent the disallowance from being permanent.

(B) *Nondeductible basis recovery*. Any other decrease in the basis of S's assets (or an equivalent as described in paragraph (b)(3)(iv)(B) of this section) may be a noncapital, nondeductible expense to the extent that the decrease is not otherwise taken into account in determining stock basis and is permanently eliminated for purposes of determining S's taxable income or loss. Whether a decrease is so treated is determined by taking into account both the purposes of the Code or regulatory provision resulting in the decrease and the purposes of this section. For example, S's noncapital, nondeductible expenses include any basis reduction under section 50(c)(1), section 1017, section 1059, §1.1502–20(b), or §1.1502–20(g). Also included as a noncapital, nondeductible expense is the amount of any gross-up for taxes paid by another taxpayer that S is treated as having paid (e.g., income included under section 78, or the portion of an undistributed capital gain dividend that is treated as tax deemed to have been paid by a shareholder under section 852(b)(3)(D)(ii), whether or not any corresponding amount is claimed as a tax credit). In contrast, a decrease generally is not a noncapital, nondeductible expense if it results because S redeems stock in a transaction to which section 302(a) applies, S receives assets in a liquidation to which section 332 applies and its basis in the assets is less than its basis in the stock canceled, or S distributes the stock of a subsidiary in a distribution to which section 355 applies.

(iv) *Special rules for tax-exempt income and noncapital, nondeductible expenses*. For purposes of paragraphs (b)(3)(ii) and (iii) of this section:

(A) *Treatment as permanent*. An amount is permanently excluded from gross income, or permanently disallowed or eliminated, if it is so treated by S even though another person may take a corresponding amount into account. For example, if S sells property to a nonmember at a loss that is disallowed under section 267(a), S's loss is a noncapital, nondeductible expense even though under section 267(d) the nonmember may treat a corresponding amount of gain as not recognized. (If the nonmember is a subsidiary in another consolidated group, its gain not recognized under section 267(d) is tax-exempt income under paragraph (b)(3)(ii)(A) of this section.)

(B) *Amounts equivalent to basis and adjustments to basis*. Amounts equivalent to basis include the amount of money, the amount of a loss carryover, and the amount of an adjustment to gain or loss under section 475(a) for securities described in section 475(a)(2). An equivalent to a basis increase includes a decrease in an excess loss account, and an equivalent to a basis decrease includes the denial of basis for taxable income.

(C) *Timing*. An amount is taken into account in the year in which it would be taken into account under paragraph (b)(3)(i) of this section if it were subject to Federal income taxation.

(D) *Tax sharing agreements*. Taxes are taken into account by applying the principles of section 1552 and the percentage method under §1.1502–33(d)(3) (and by assuming a 100% allocation of any decreased tax liability). The treatment of amounts allocated under this paragraph (b)(3)(iv)(D) is analogous to the treatment of allocations under §1.1552–1(b)(2). For example, if one member owes a payment to a second member, the first member is treated as indebted to the second member. The right to receive payment is treated as a positive adjustment under paragraph (b)(3)(ii) of this section, and the obligation to make payment is treated as a negative adjustment under paragraph (b)(3)(iii) of this section. If the obligation is not paid, the amount not paid generally is treated as a distribution,

contribution, or both, depending on the relationship between the members.

(v) *Distributions.* Distributions taken into account under paragraph (b)(2) of this section are distributions with respect to S's stock to which section 301 applies and all other distributions treated as dividends (e.g., under section 356(a)(2)). See §1.1502–13(f)(2)(iv) for taking into account distributions to which section 301 applies (but not other distributions treated as dividends) under the entitlement rule.

(4) *Waiver of loss carryovers from separate return limitation years*—(i) *General rule.* If S has a loss carryover from a separate return limitation year when it becomes a member of a consolidated group, the group may make an irrevocable election to treat all or any portion of the loss carryover as expiring for all Federal income tax purposes immediately before S becomes a member of the consolidated group (deemed expiration). If S was a member of another group immediately before it became a member of the consolidated group, the expiration is also treated as occurring immediately after it ceases to be a member of the prior group.

(ii) *Stock basis adjustments from a waiver*—(A) *Qualifying transactions.* If S becomes a member of the consolidated group in a qualifying cost basis transaction and an election under this paragraph (b)(4) is made, the noncapital, nondeductible expense resulting from the deemed expiration does not result in a corresponding stock basis adjustment for any member under this section. A qualifying cost basis transaction is the purchase (i.e., a transaction in which basis is determined under section 1012) by members of the acquiring consolidated group (while they are members) in a 12-month period of an amount of S's stock satisfying the requirements of section 1504(a)(2).

(B) *Nonqualifying transactions.* If S becomes a member of the consolidated group other than in a qualifying cost basis transaction and an election under this paragraph (b)(4) is made, the basis of its stock that is owned by members immediately after it becomes a member is subject to reduction under the principles of this section to reflect the deemed expiration. The reduction occurs immediately before S becomes a member, but after it ceases to be a member of any prior group, and it therefore does not result in a corresponding stock basis adjustment for any higher-tier member of the transferring or acquiring consolidated group. Any basis reduction under this paragraph (b)(4)(ii)(B) is taken into account in making determinations of basis under the Code with respect to S's stock (e.g., a determination under section 362 because the stock is acquired in a transaction described in section 368(a)(1)(B)), but it does not result in corresponding stock basis adjustments under this section for any higher-tier member. If the basis reduction exceeds the basis of S's stock, the excess is treated as an excess loss account to which the members owning S's stock succeed.

(C) *Higher-tier corporations.* If S becomes a member of the consolidated group as a result, in whole or in part, of a higher-tier corporation becoming a member (whether or not in a qualifying cost basis transaction), additional adjustments are required. The highest-tier corporation (T) whose becoming a member resulted in S becoming a member, and T's chain of lower-tier corporations that includes S, are subject to the adjustment. The deemed expiration of S's loss carryover that results in a negative adjustment for the first higher-tier corporation is treated as an expiring loss carryover of that higher-tier corporation for purposes of applying paragraph (b)(4)(ii)(B) of this section to that corporation. For example, if P purchases all of the stock of T, T owns all of the stock of T1, T1 owns all of the stock of S, S becomes a member as a result of T becoming a member, and the election under this paragraph (b)(4) is made, the basis of the S stock is reduced and the reduction tiers up to T1, T1 treats the negative adjustment to its basis in S's stock as an expiring loss carryover of T1, and T then adjusts its basis in T1's stock. In addition, if T becomes a member of the acquiring group in a transaction other than a qualifying cost basis transaction, the amount that tiers up to T also reduces the basis of its stock under paragraph (b)(4)(ii)(B) of this section (but the

amount does not tier up to higher-tier members).

(iii) *Net asset basis limitation*. Basis reduced under this paragraph (b)(4) is restored before S becomes a member (and before the basis of S's stock is taken into account in determining basis under the Code) to the extent necessary to conform a share's basis to its allocable portion of net asset basis. In the case of higher-tier corporations under paragraph (b)(4)(ii)(C) of this section, the restoration does not tier up but is instead applied separately to each higher-tier corporation. For purposes of determining each corporation's net asset basis (including the basis of stock in lower-tier corporations), the restoration is applied in the order of tiers, from the lowest to the highest. For purposes of the restoration:

(A) A member's net asset basis is the positive or negative difference between the adjusted basis of its assets (and the amount of any of its loss carryovers that are not deemed to expire) and its liabilities. Appropriate adjustments must be made, for example, to disregard liabilities that subsequently will give rise to deductions (e.g., liabilities to which section 461(h) applies).

(B) Within a class of stock, each share has the same allocable portion of net asset basis. If there is more than one class of common stock, the net asset basis is allocated to each class by taking into account the terms of each class and all other facts and circumstances relating to the overall economic arrangement.

(iv) *Election*. The election described in this paragraph (b)(4) must be made in a separate statement entitled ''ELECTION TO TREAT LOSS CARRYOVER AS EXPIRING UNDER § 1.1502–32(b)(4).'' The statement must be filed with the consolidated group's return for the year S becomes a member, and it must be signed by the common parent and S. A separate statement must be made for each member whose loss carryover is deemed to expire. The statement must identify the amount of each loss carryover deemed to expire (or the amount of each loss carryover deemed not to expire, with any balance of any loss carryovers being deemed to expire), the basis of any stock reduced as a result of the deemed expiration, and the computation of the basis reduction.

(5) *Examples*—(i) *In general*. For purposes of the examples in this section, unless otherwise stated, P owns all of the only class of S's stock, the stock is owned for the entire year, S owns no stock of lower-tier members, the tax year of all persons is the calendar year, all persons use the accrual method of accounting, the facts set forth the only corporate activity, preferred stock is described in section 1504(a)(4), all transactions are between unrelated persons, and tax liabilities are disregarded.

(ii) *Stock basis adjustments*. The principles of this paragraph (b) are illustrated by the following examples.

Example 1. Taxable income. (a) *Current taxable income.* For Year 1, the P group has $100 of taxable income when determined by including only S's items of income, gain, deduction, and loss taken into account. Under paragraph (b)(1) of this section, P's basis in S's stock is adjusted under this section as of the close of Year 1. Under paragraph (b)(2) of this section, P's basis in S's stock is increased by the amount of the P group's taxable income determined by including only S's items taken into account. Thus, P's basis in S's stock is increased by $100 as of the close of Year 1.

(b) *Intercompany gain that is not taken into account.* The facts are the same as in paragraph (a) of this *Example 1*, except that S also sells property to another member at a $25 gain in Year 1, the gain is deferred under § 1.1502–13 and taken into account in Year 3, and P sells 10% of S's stock to nonmembers in Year 2. Under paragraph (b)(3)(i) of this section, S's deferred gain is not additional taxable income for Year 1 or 2 because it is not taken into account in determining the P group's consolidated taxable income for either of those years. The deferred gain is not tax-exempt income under paragraph (b)(3)(ii) of this section because it is not permanently excluded from S's gross income. The deferred gain does not result in a basis adjustment until Year 3, when it is taken into account in determining the P group's consolidated taxable income. Consequently, P's basis in the S shares sold is not increased to reflect S's gain from the intercompany sale of the property. In Year 3, the deferred gain is taken into account, but the amount allocable to the shares sold by P does not increase their basis because these shares are held by nonmembers.

(c) *Intercompany gain taken into account.* The facts are the same as in paragraph (b) of this *Example 1*, except that P sells all of S's

stock in Year 2 (rather than only 10%). Under § 1.1502–13, S takes the $25 gain into account immediately before S becomes a nonmember. Thus, P's basis in S's stock is increased to reflect S's gain from the intercompany sale of the property.

Example 2. Tax loss. (a) *Current absorption.* For Year 2, the P group has a $50 consolidated net operating loss when determined by taking into account only S's items of income, gain, deduction, and loss. S's loss is absorbed by the P group in Year 2, offsetting P's income for that year. Under paragraph (b)(3)(i)(A) of this section, because S's loss is absorbed in the year it arises, P has a $50 negative adjustment with respect to S's stock. Under paragraph (b)(2) of this section, P reduces its basis in S's stock by $50. Under paragraph (a)(3)(ii) of this section, if the decrease exceeds P's basis in S's stock, the excess is P's excess loss account in S's stock.

(b) *Interim determination from stock sale.* The facts are the same as in paragraph (a) of this *Example 2,* except that S's Year 2 loss arises in the first half of the calendar year, P sells 50% of S's stock on July 1 of Year 2, and P's income for Year 2 does not arise until after the sale of S's stock. P's income for Year 2 (exclusive of the sale of S's stock) is offset by S's loss, even though the income arises after the stock sale, and no loss remains to be apportioned to S. See §§ 1.1502–11 and 1.1502–21(b). Under paragraph (b)(3)(i)(A) of this section, because S's $50 loss is absorbed in the year it arises, it reduces P's basis in the S shares sold by $25 immediately before the stock sale. Because S becomes a nonmember, the loss also reduces P's basis in the retained S shares by $25 immediately before S becomes a nonmember. See also § 1.1502–20(b) (possible stock basis reduction on the deconsolidation of S).

(c) *Loss carryback.* The facts are the same as in paragraph (a) of this *Example 2,* except that P has no income or loss for Year 2, S's $50 loss is carried back and absorbed by the P group in Year 1 (offsetting the income of P or S), and the P group receives a $17 tax refund in Year 2 that is paid to S. Under paragraph (b)(3)(i)(B) of this section, because the $50 loss is carried back and absorbed in Year 1, it is treated as a tax loss for Year 2 (the year in which it arises). Under paragraph (b)(3)(ii) of this section, the refund is treated as tax-exempt income of S. Under paragraph (b)(3)(iv)(C) of this section, the tax- exempt income is taken into account in Year 2 because that is the year it would be taken into account under S's method of accounting if it were subject to Federal income taxation. Thus, under paragraph (b)(2) of this section, P reduces its basis in S's stock by $33 as of the close of Year 2 (the $50 tax loss, less the $17 tax refund).

(d) *Loss carryforward.* The facts are the same as in paragraph (a) of this *Example 2,* except that P has no income or loss for Year 2, and S's loss is carried forward and absorbed by the P group in Year 3 (offsetting the income of P or S). Under paragraph (b)(3)(i)(A) of this section, the loss is not treated as a tax loss under paragraph (b)(2) of this section until Year 3.

Example 3. Tax-exempt income and noncapital, nondeductible expenses. (a) *Facts.* For Year 1, the P group has $500 of consolidated taxable income. However, the P group has a $100 consolidated net operating loss when determined by including only S's items of income, gain, deduction, and loss taken into account. Also for Year 1, S has $80 of interest income that is permanently excluded from gross income under section 103, and S incurs $60 of related expense for which a deduction is permanently disallowed under section 265.

(b) *Analysis.* Under paragraph (b)(3)(i)(A) of this section, S has a $100 tax loss for Year 1. Under paragraph (b)(3)(ii)(A) of this section, S has $80 of tax-exempt income. Under paragraph (b)(3)(iii)(A) of this section, S has $60 of noncapital, nondeductible expense. Under paragraph (b)(3)(iv)(C) of this section, the tax-exempt income and noncapital, nondeductible expense are taken into account in Year 1 because that is the year they would be taken into account under S's method of accounting if they were subject to Federal income taxation. Thus, under paragraph (b) of this section, P reduces its basis in S's stock as of the close of Year 1 by an $80 net amount (the $100 tax loss, less $80 of tax-exempt income, plus $60 of noncapital, nondeductible expenses).

Example 4. Discharge of indebtedness. (a) *Facts.* P forms S on January 1 of Year 1 and S borrows $200. During Year 1, S's assets decline in value and the P group has a $100 consolidated net operating loss when determined by including only S's items of income, gain, deduction, and loss taken into account. None of the loss is absorbed by the group in Year 1, and S is discharged from $100 of indebtedness at the close of Year 1. Under section 108(a), S's $100 of discharge of indebtedness income is excluded from gross income because of insolvency. Under section 108(b), S's $100 net operating loss is reduced to zero at the close of Year 1.

(b) *Analysis.* Under paragraph (b)(3)(iii)(B) of this section, the reduction of the net operating loss is treated as a noncapital, nondeductible expense in Year 1 because the net operating loss is permanently disallowed by section 108(b). Under paragraph (b)(3)(ii)(C) of this section, all $100 of S's discharge of indebtedness income is treated as tax-exempt income in Year 1 because the discharge results in a $100 reduction to S's net operating loss. Consequently, the loss and the cancellation of the indebtedness result in no net adjustment to P's basis in S's stock under paragraph (b) of this section. (If the basis of assets were reduced under section 1017, rather than S's loss, the reduction would not

occur until the beginning of Year 2 and the discharge would not be treated as tax-exempt income until that time.)

(c) *Insufficient attributes.* The facts are the same as in paragraph (a) of this *Example 4,* except that $70 of S's net operating loss is absorbed in Year 1, offsetting P's income for that year, and the indebtedness is discharged at the beginning of Year 2. Under paragraph (b) of this section, the $70 of S's loss absorbed in Year 1 reduces P's basis in S's stock by $70 as of the close of Year 1. Under section 108(a), S's discharge of indebtedness income in Year 2 is excluded from the P group's gross income because of insolvency. Under section 108(b), the remaining $30 of S's net operating loss carryover from Year 1 is reduced to zero at the close of Year 2. No other attributes are reduced. Under paragraph (b)(3)(iii)(B) of this section, the elimination of the remaining $30 net operating loss by section 108(b) is treated as a noncapital, nondeductible expense. Under paragraph (b)(3)(ii)(C) of this section, only $30 of the discharge is treated as tax-exempt income because only that amount is applied to reduce tax attributes. See also §1.1502–19(c)(1)(iii) (taking into account any excess loss account of P in S's stock). The remaining $70 of discharge income excluded under section 108(a) has no effect on P's basis in S's stock.

(d) *Purchase price adjustment.* Assume instead that S buys land in Year 1 in exchange for S's $100 purchase money note (bearing interest at a market rate of interest in excess of the applicable Federal rate, and providing for a principal payment at the end of Year 10), and the seller agrees with S in Year 4 to discharge $60 of the note as a purchase price adjustment to which section 108(e)(5) applies. S has no discharge of indebtedness income that is treated as tax-exempt income under paragraph (b)(3)(ii) of this section. In addition, the $60 purchase price adjustment is not a noncapital, nondeductible expense under paragraph (b)(3)(iii) of this section. A purchase price adjustment is not equivalent to a discharge of indebtedness that is offset by a deduction or loss. Consequently, the purchase price adjustment results in no net adjustment to P's basis in S's stock under paragraph (b) of this section.

Example 5. Distributions. (a) *Amounts declared and distributed.* For Year 1, the P group has $120 of consolidated taxable income when determined by including only S's items of income, gain, deduction, and loss taken into account. S declares and makes a $10 dividend distribution to P at the close of Year 1. Under paragraph (b) of this section, P increases its basis in S's stock as of the close of Year 1 by a $110 net amount ($120 of taxable income, less a $10 distribution).

(b) *Distributions in later years.* The facts are the same as in paragraph (a) of this *Example 5,* except that S does not declare and distribute the $10 until Year 2. Under paragraph (b) of this section, P increases its basis in S's stock by $120 as of the close of Year 1, and decreases its basis by $10 as of the close of Year 2. (If P were also a subsidiary, the basis of its stock would also be increased in Year 1 to reflect P's $120 adjustment to basis of S's stock; the basis of P's stock would not be changed as a result of S's distribution in Year 2, because P's $10 of tax-exempt dividend income under paragraph (b)(3)(ii) of this section would be offset by the $10 negative adjustment to P's basis in S's stock for the distribution.)

(c) *Amounts declared but not distributed.* The facts are the same as in paragraph (a) of this *Example 5,* except that, during December of Year 1, S declares (and P becomes entitled to) another $70 dividend distribution with respect to its stock, but P does not receive the distribution until after it sells all of S's stock at the close of Year 1. Under §1.1502–13(f)(2)(iv), S is treated as making a $70 distribution to P at the time P becomes entitled to the distribution. (If S is distributing an appreciated asset, its gain under section 311 is also taken into account under paragraph (b)(3)(i) of this section at the time P becomes entitled to the distribution.) Consequently, under paragraph (b) of this section, P increases its basis in S's stock as of the close of Year 1 by only a $40 net amount ($120 of taxable income, less two distributions totalling $80). Any further adjustments after S ceases to be a member and the $70 distribution is made would be duplicative, because the stock basis has already been adjusted for the distribution. Accordingly, the distribution will not result in further adjustments or gain, even if the distribution is a payment to which section 301(c)(2) or (3) applies.

Example 6. Reorganization with boot. (a) *Facts.* P owns all of the stock of S and T. On January 1 of Year 1, P has a $100 basis in the S stock and a $60 basis in the T stock. S and T have no items of income, gain, deduction, or loss for Year 1. S and T each have substantial earnings and profits. At the close of Year 1, T merges into S in a reorganization described in section 368(a)(1)(A) (and in section 368(a)(1)(D)). P receives no additional S stock, but does receive $10 which is treated as a dividend under section 356(a)(2).

(b) *Analysis.* Under section 358, P's basis in the S stock is increased by its basis in the T stock. Under §1.1502–13(f)(3) the money received is treated as being taken into account immediately after the transaction. Thus, the $10 is treated as a dividend distribution under section 301 and under paragraph (b)(3)(v) of this section, the $10 is a distribution to which paragraph (b)(2)(iv) of this section applies. Accordingly, P's basis in the S stock is $160 immediately after the merger,

which is then decreased by the $10 distribution taken into account immediately after the transaction, resulting in a basis of $150.

Example 7. Tiering up of basis adjustments. P owns all of S's stock, and S owns all of T's stock. For Year 1, the P group has $100 of consolidated taxable income when determined by including only T's items of income, gain, deduction, and loss taken into account, and $50 of consolidated taxable income when determined by including only S's items taken into account. S increases its basis in T's stock by $100 under paragraph (b) of this section. Under paragraph (a)(3) of this section, this $100 basis adjustment is taken into account in determining P's adjustments to its basis in S's stock. Thus, P increases its basis in S's stock by $150 under paragraph (b) of this section.

Example 8. Allocation of items. (a) *Acquisition in mid-year.* P is the common parent of a consolidated group, and S is an unaffiliated corporation filing separate returns on a calendar-year basis. P acquires all of S's stock and S becomes a member of the P group on July 1 of Year 1. For the entire calendar Year 1, S has $100 of ordinary income and under § 1.1502–76(b) $60 is allocated to the period from January 1 to June 30 and $40 to the period from July 1 to December 31. Under paragraph (b) of this section, P increases its basis in S's stock by $40.

(b) *Sale in mid-year.* The facts are the same as in paragraph (a) of this *Example 8,* except that S is a member of the P group at the beginning of Year 1 but ceases to be a member on June 30 as a result of P's sale of S's stock. Under paragraph (b) of this section, P increases its basis in S's stock by $60 immediately before the stock sale. (P's basis increase would be the same if S became a nonmember because S issued additional shares to nonmembers.)

(c) *Absorption of loss carryovers.* Assume instead that S is a member of the P group at the beginning of Year 1 but ceases to be a member on June 30 as a result of P's sale of S's stock, and a $100 consolidated net operating loss attributable to S is carried over by the P group to Year 1. The consolidated net operating loss may be apportioned to S for its first separate return year only to the extent not absorbed by the P group during Year 1. Under paragraph (b)(3)(i) of this section, if the loss is absorbed by the P group in Year 1, whether the offsetting income arises before or after P's sale of S's stock, the absorption of the loss carryover is included in the determination of S's taxable income or loss for Year 1. Thus, P's basis in S's stock is adjusted under paragraph (b) of this section to reflect any absorption of the loss by the P group.

Example 9. Gross-ups. (a) *Facts.* P owns all of the stock of S, and S owns all of the stock of T, a newly formed controlled foreign corporation that is not a passive foreign investment company. In Year 1, T has $100 of subpart F income and pays $34 of foreign income tax, leaving T with $66 of earnings and profits. The P group has $100 of consolidated taxable income when determined by taking into account only S's items (the inclusion under section 951(a), taking into account the section 78 gross-up). As a result of the section 951(a) inclusion, S increases its basis in T's stock by $66 under section 961(a).

(b) *Analysis.* Under paragraph (b)(3)(i) of this section, S has $100 of taxable income. Under paragraph (b)(3)(iii)(B) of this section, the $34 gross-up for taxes paid by T that S is treated as having paid is a noncapital, nondeductible expense (whether or not any corresponding amount is claimed by the P group as a tax credit). Thus, P increases its basis in S's stock under paragraph (b) of this section by the net adjustment of $66.

(c) *Subsequent distribution.* The facts are the same as in paragraph (a) of this *Example 9,* except that T distributes its $66 of earnings and profits in Year 2. The $66 distribution received by S is excluded from S's income under section 959(a) because the distribution represents earnings and profits attributable to amounts that were included in S's income under section 951(a) for Year 1. In addition, S's basis in T's stock is decreased by $66 under section 961(b). The excluded distribution is not tax-exempt income under paragraph (b)(3)(ii) of this section because of the corresponding reduction to S's basis in T's stock. Consequently, P's basis in S's stock is not adjusted under paragraph (b) of this section for Year 2.

Example 10. Recapture of tax-exempt items. (a) *Facts.* S is a life insurance company. For Year 1, the P group has $200 of consolidated taxable income, determined by including only S's items of income, gain, deduction, and loss taken into account (including a $300 small company deduction under section 806). In addition, S has $100 of tax-exempt interest income, $60 of which is S's *company share.* The remaining $40 of tax-exempt income is the *policyholders' share* that reduces S's deduction for increase in reserves.

(b) *Tax-exempt items generally.* Under paragraph (b)(3)(i) of this section, S has $200 of taxable income for Year 1. Also for Year 1, S has $100 of tax-exempt income under paragraph (b)(3)(ii)(A) of this section, and another $300 is treated as tax-exempt income under paragraph (b)(3)(ii)(B) of this section because of the deduction under section 806. Under paragraph (b)(3)(iii) of this section, S has $40 of noncapital, nondeductible expenses for Year 1 because S's deduction under section 807 for its increase in reserves has been permanently reduced by the $40 policyholders' share of the tax-exempt interest income. Thus, P increases its basis in S's stock by $560 under paragraph (b) of this section.

(c) *Recapture.* Assume instead that S is a property and casualty company and, for Year

1, S accrues $100 of estimated salvage recoverable under section 832. Of this amount, $87 (87% of $100) is excluded from gross income because of the ''fresh start'' provisions of Sec. 11305(c) of P.L. 101–508 (the Omnibus Budget Reconciliation Act of 1990). Thus, S has $87 of tax-exempt income under paragraph (b)(3)(ii)(A) of this section that increases P's basis in S's stock for Year 1. (S also has $13 of taxable income over the period of inclusion under section 481.) In Year 5, S determines that the $100 salvage recoverable was overestimated by $30 and deducts $30 for the reduction of the salvage recoverable. However, S has $26.10 (87% of $30) of taxable income in Year 5 due to the partial recapture of its fresh start. Because S has no basis corresponding to this income, S is treated under paragraph (b)(3)(iii)(B) of this section as having a $26.10 noncapital, nondeductible expense in Year 5. This treatment is necessary to reflect the elimination of the erroneous fresh start in S's stock basis and causes a decrease in P's basis in S's stock by $30 for Year 5 (a $3.90 taxable loss and a $26.10 special adjustment).

(c) *Allocation of adjustments among shares of stock*—(1) *In general.* The portion of the adjustment under paragraph (b) of this section that is described in paragraph (b)(2)(iv) of this section (negative adjustments for distributions) is allocated to the shares of S's stock to which the distribution relates. The remainder of the adjustment, described in paragraphs (b)(2)(i) through (iii) of this section (adjustments for taxable income or loss, tax-exempt income, and noncapital, nondeductible expenses), is allocated among the shares of S's stock as provided in paragraphs (c)(2) through (4) of this section. If the remainder of the adjustment is positive, it is allocated first to any preferred stock to the extent provided in paragraph (c)(3) of this section, and then to the common stock as provided in paragraph (c)(2) of this section. If the remainder of the adjustment is negative, it is allocated only to common stock as provided in paragraph (c)(2) of this section. An adjustment under this section allocated to a share for the period the share is owned by a nonmember has no effect on the basis of the share. See paragraph (c)(4) of this section for the reallocation of adjustments, and paragraph (d) of this section for definitions. See §1.1502-19(d) for special allocations of basis determined or adjusted under the Code with respect to excess loss accounts.

(2) *Common stock*—(i) *Allocation within a class.* The portion of the adjustment described in paragraphs (b)(2)(i) through (iii) of this section (the adjustment determined without taking distributions into account) that is allocable to a class of common stock is generally allocated equally to each share within the class. However, if a member has an excess loss account in shares of a class of common stock at the time of a positive adjustment, the portion of the adjustment allocable to the member with respect to the class is allocated first to equalize and eliminate that member's excess loss accounts and then to increase equally its basis in the shares of that class. Similarly, any negative adjustment is allocated first to reduce the member's positive basis in shares of the class before creating or increasing its excess loss account. Distributions and any adjustments or determinations under the Internal Revenue Code (e.g., under section 358, including any modifications under §1.1502–19(d)) are taken into account before the allocation is made under this paragraph (c)(2)(i).

(ii) *Allocation among classes*—(A) *General rule.* If S has more than one class of common stock, the extent to which the adjustment described in paragraphs (b)(2)(i) through (iii) of this section (the adjustment determined without taking distributions into account) is allocated to each class is determined, based on consistently applied assumptions, by taking into account the terms of each class and all other facts and circumstances relating to the overall economic arrangement. The allocation generally must reflect the manner in which the classes participate in the economic benefit or burden (if any) corresponding to the items of income, gain, deduction, or loss allocated. In determining participation, any differences in voting rights are not taken into account, and the following factors are among those to be considered—

(*1*) The interest of each share in economic profits and losses (if different from the interest in taxable income);

(*2*) The interest of each share in cash flow and other non-liquidating distributions; and

(*3*) The interest of each share in distributions in liquidation.

(B) *Distributions and Code adjustments.* Distributions and any adjustments or determinations under the Internal Revenue Code are taken into account before the allocation is made under this paragraph (c)(2)(ii).

(3) *Preferred stock.* If the adjustment under paragraphs (b)(2)(i) through (iii) of this section (the adjustment determined without taking distributions into account) is positive, it is allocated to preferred stock to the extent required (when aggregated with prior allocations to the preferred stock during the period that S is a member of the consolidated group) to reflect distributions described in section 301 (and all other distributions treated as dividends) to which the preferred stock becomes entitled, and arrearages arising, during the period that S is a member of the consolidated group. For this purpose, the preferred stock is treated as entitled to a distribution no later than the time the distribution is taken into account under the Internal Revenue Code (e.g., under section 305). If the amount of distributions and arrearages exceeds the positive amount (when aggregated with prior allocations), the positive amount is first allocated among classes of preferred stock to reflect their relative priorities, and the amount allocated to each class is then allocated pro rata within the class. An allocation to a share with respect to arrearages and distributions for the period the share is owned by a nonmember is not reflected in the basis of the share under paragraph (b) of this section. However, if P and S cease to be members of one consolidated group and remain affiliated as members of another consolidated group, P's ownership of S's stock during consolidated return years of the prior group is treated for this purpose as ownership by a member to the extent that the adjustments during the prior consolidated return years are still reflected in the basis of the preferred stock.

(4) *Cumulative redetermination*—(i) *General rule.* A member's basis in each share of S's preferred and common stock must be redetermined whenever necessary to determine the tax liability of any person. See paragraph (b)(1) of this section. The redetermination is made by reallocating S's net adjustment described in paragraphs (b)(2)(i) through (iii) of this section (the adjustment determined without taking distributions into account) for each consolidated return year (or other applicable period) of the group by taking into account all of the facts and circumstances affecting allocations under this paragraph (c) as of the redetermination date with respect to all of S's shares. For this purpose:

(A) Amounts may be reallocated from one class of S's stock to another class, but not from one share of a class to another share of the same class.

(B) If there is a change in the equity structure of S (e.g., as the result of S's issuance, redemption, or recapitalization of shares), a cumulative redetermination is made for the period before the change. If a reallocation is required by another redetermination after a change, amounts arising after the change are reallocated before amounts arising before the change.

(C) If S becomes a nonmember as a result of a change in its equity structure, any reallocation is made only among the shares of S's stock immediately before the change. For example, if S issues stock to a nonmember creditor in exchange for its debt, and the exchange results in S becoming a nonmember, any reallocation is only among the shares of S's stock immediately before the exchange.

(D) Any reallocation is treated for all purposes after it is made (including subsequent redeterminations) as the original allocation of an amount under this paragraph (c), but the reallocation does not affect any prior period.

(ii) *Prior use of allocations.* An amount may not be reallocated under paragraph (c)(4)(i) of this section to the extent that the amount has been used before the reallocation. For this purpose, an amount has been used to the extent it has been taken into account, directly or indirectly, by any member in determining income, gain, deduction, or loss, or in determining the basis of any property that is not subject to this section (e.g., stock of a corporation that has become a nonmember). For example, if P sells a share of S stock, an amount previously allocated to the share cannot be reallocated to another

share of S stock, but an amount allocated to another share of S stock can still be reallocated to the sold share because the reallocated amount has not been taken into account; however, any adjustment reallocated to the sold share may effectively be eliminated, because the reallocation was not in effect when the share was previously sold and P's gain or loss from the sale is not redetermined. If, however, P sells the share of S stock to another member, the amount is not used until P's gain or loss is taken into account under § 1.1502–13.

(5) *Examples*. The principles of this paragraph (c) are illustrated by the following examples.

Example 1. Ownership of less than all the stock. (a) *Facts*. P owns 80% of S's only class of stock with an $800 basis. For Year 1, S has $100 of taxable income.

(b) *Analysis*. Under paragraph (c)(1) of this section, the $100 positive adjustment under paragraph (b) of this section for S's taxable income is allocated among the shares of S's stock, including shares owned by nonmembers. Under paragraph (c)(2)(i) of this section, the adjustment is allocated equally to each share of S's stock. Thus, P increases its basis in S's stock under paragraph (b) of this section as of the close of Year 1 by $80. (The basis of the 20% of S's stock owned by nonmembers is not adjusted under this section.)

(c) *Varying interest*. The facts are the same as in paragraph (a) of this *Example 1*, except that P buys the remaining 20% of S's stock at the close of business on June 30 of Year 1 for $208. Under paragraph (b)(1) of this section and the principles of § 1.1502–76(b), S's $100 of taxable income is allocable $40 to the period from January 1 to June 30 and $60 to the period from July 1 to December 31. Thus, for the period ending June 30, P is treated as having a $32 adjustment with respect to the S stock that P has owned since January 1 (80% of $40) and, under paragraph (c)(2)(i) of this section, the adjustment is allocated equally among those shares. For the period ending December 31, P is treated as having a $60 adjustment (100% of $60) that is also allocated equally among P's shares of S's stock owned after June 30. P's basis in the shares owned as of the beginning of the year therefore increases by $80 (the sum of 80% of $40 and 80% of $60), from $800 to $880, and P's basis in the shares purchased on June 30 increases by $12 (20% of $60), from $208 to $220. Thus, P's aggregate basis in S's stock as of the end of Year 1 is $1,100.

(d) *Tax liability*. The facts are the same as in paragraph (a) of this *Example 1*, except that P pays S's $34 share of the group's consolidated tax liability resulting from S's taxable income, and S does not reimburse P. S's $100 of taxable income results in a positive adjustment under paragraph (b)(3)(i) of this section, and S's $34 of tax liability results in a negative adjustment under paragraph (b)(3)(iv)(D) of this section and the principles of section 1552. Because S does not make any payment in recognition of the additional tax liability, by analogy to the treatment under § 1.1552–1(b)(2), S is treated as having made a $34 payment that is described in paragraph (b)(3)(iii) of this section (noncapital, nondeductible expenses) and as having received an equal amount from P as a capital contribution. Thus, P increases its basis in its S stock by $52.80 (80% of the $100 of taxable income, less 80% of the $34 tax payment). In addition, P increases its basis in S's stock by $34 under the Internal Revenue Code and paragraph (a)(2) of this section to reflect the capital contribution. In the aggregate, P increases its basis in S's stock by $86.80. (If, as in paragraph (c) of this *Example 1*, P buys the remaining 20% of S's stock at the close of business on June 30, P increases its basis in S's stock by another $7.90 for the additional 20% interest in S's income after June 30 ($60 multiplied by 20%, less 20% of the $20.40 tax payment on $60); the $34 capital contribution by P is reflected in all of its S shares (not just the original 80%), and P's aggregate basis adjustment under this section is $94.70 ($86.80 plus $7.90).)

Example 2. Preferred stock. (a) *Facts*. P owns all of S's common stock with an $800 basis, and nonmembers own all of S's preferred stock. The preferred stock was issued for $200, has a $20 annual, cumulative preference as to dividends, and has an initial liquidation preference of $200. For Year 1, S has $50 of taxable income and no distributions are declared or made.

(b) *Analysis of arrearages*. Under paragraphs (c) (1) and (3) of this section, $20 of the $50 positive adjustment under paragraph (b) of this section is allocated first to the preferred stock to reflect the dividend arrearage arising in Year 1. The remaining $30 of the positive adjustment is allocated to the common stock, increasing P's basis from $800 to $830 as of the close of Year 1. (The basis of the preferred stock owned by nonmembers is not adjusted under this section.)

(c) *Current distribution*. The facts are the same as in paragraph (a) of this *Example 2*, except that S declares and makes a $20 distribution with respect to the preferred stock during Year 1 in satisfaction of its preference. The results are the same as in paragraph (b) of this *Example 2*.

(d) *Varying interest*. The facts are the same as in paragraph (a) of this *Example 2*, except that S has no income or loss for Years 1 and 2, P purchases all of S's preferred stock at the beginning of Year 3 for $240, and S has $70 of taxable income for Year 3. Under paragraph (c)(3) of this section, $60 of the $70

positive adjustment under paragraph (b) of this section is allocated to the preferred stock to reflect the dividends arrearages for Years 1 through 3, but only the $20 for Year 3 is reflected in the basis of the preferred stock under paragraph (b) of this section. (The remaining $40 is not reflected because the preferred stock was owned by nonmembers during Years 1 and 2.) Thus, P increases its basis in S's preferred stock from $240 to $260, and its basis in S's common stock from $800 to $810, as of the close of Year 3. (If P had acquired all of S's preferred stock in a transaction to which section 351 applies, and P's initial basis in S's preferred stock was $200 under section 362, P's basis in S's preferred stock would increase from $200 to $220.)

(e) *Varying interest with current distributions*. The facts are the same as in paragraph (d) of this *Example 2*, except that S declares and makes a $20 distribution with respect to the preferred stock in each of Years 1 and 2 in satisfaction of its preference, and P purchases all of S's preferred stock at the beginning of Year 3 for $200. Under paragraph (c)(3) of this section, $40 of the $70 positive adjustment under paragraph (b) of this section is allocated to the preferred stock to reflect the distributions in Years 1 and 2, and $20 of the $70 is allocated to the preferred stock to reflect the arrearage for Year 3. However, as in paragraph (d) of this *Example 2*, only the $20 attributable to Year 3 is reflected in the basis of the preferred stock under paragraph (b) of this section. Thus, P increases its basis in S's preferred stock from $200 to $220, and P increases its basis in S's common stock from $800 to $810.

Example 3. Cumulative redetermination. (a) *Facts*. P owns all of S's common and preferred stock. The preferred stock has a $100 annual, cumulative preference as to dividends. For Year 1, S has $200 of taxable income, the first $100 of which is allocated to the preferred stock and the remaining $100 of which is allocated to the common stock. For Year 2, S has no adjustment under paragraph (b) of this section, and P sells all of S's common stock at the close of Year 2.

(b) *Analysis*. Under paragraph (c)(4) of this section, P's basis in S's common stock must be redetermined as of the sale of the stock. The redetermination is made by reallocating the $200 positive adjustment under paragraph (b) of this section for Year 1 by taking into account all of the facts and circumstances affecting allocations as of the sale. Thus, the $200 positive adjustment for Year 1 is reallocated entirely to the preferred stock to reflect the dividend arrearages for Years 1 and 2. The reallocation away from the common stock reflects the fact that, because of the additional amount of arrearage in Year 2, the common stock is not entitled to any part of the $200 of taxable income from Year 1. Thus, the common stock has no positive or negative adjustment, and the preferred stock has a $200 positive adjustment. These reallocations are treated as the original allocations for Years 1 and 2. (The results for the common stock would be the same if the common and preferred stock were not owned by the same member, or the preferred stock were owned by nonmembers.)

(c) *Preferred stock issued after adjustment arises*. The facts are the same as in paragraph (a) of this *Example 3*, except that S does not issue its preferred stock until the beginning of Year 2, S has no further adjustment under paragraph (b) of this section for Years 2 and 3, and P sells S's common stock at the close of Year 3. Under paragraphs (c) (1) and (2) of this section, the $200 positive adjustment for Year 1 is initially allocated entirely to the common stock. Under paragraph (c)(4) of this section, the $200 adjustment is reallocated to the preferred stock to reflect the arrearages for Years 2 and 3. Thus, the common stock has no positive or negative adjustment.

(d) *Common stock issued after adjustment arises*. The facts are the same as in paragraph (a) of this *Example 3*, except that S has no preferred stock, S issues additional common stock of the same class at the beginning of Year 2, S has no further adjustment under paragraph (b) of this section in Years 2 and 3, and P sells its S common stock at the close of Year 3. Under paragraphs (c) (1) and (2) of this section, the $200 positive adjustment for Year 1 is initially allocated entirely to the original common stock. Under paragraph (c)(4)(i)(A) of this section, the $200 adjustment is not reallocated among the original common stock and the additional stock. Unlike the preferred stock in paragraph (c) of this *Example 3*, the additional common stock is of the same class as the original stock, and there is no reallocation between shares of the same class.

(e) *Positive and negative adjustments*. The facts are the same as in paragraph (a) of this *Example 3*, except that S has a $200 loss for Year 2 that results in a negative adjustment to the common stock before any redetermination. For purposes of the basis redetermination under paragraph (c)(4) of this section, the Year 1 and 2 adjustments under paragraph (b) of this section are not netted. Thus, as in paragraph (b) of this *Example 3*, the redetermination is made by reallocating the $200 positive adjustment for Year 1 entirely to the preferred stock. The $200 negative adjustment for Year 2 is allocated entirely to the common stock. Consequently, the preferred stock has a $200 positive cumulative adjustment, and the common stock has a $200 negative cumulative adjustment. (The results would be the same if there were no other adjustments described in paragraph (b) of this section, P sells S's common stock at the close of Year 3 rather than Year 2, and an additional $100 arrearage arises in Year 3; only adjustments under paragraph (b) of this

section may be reallocated, and there is no additional adjustment for Year 3.)

(f) *Current distributions.* The facts are the same as in paragraph (a) of this *Example 3,* except that, during Year 1, S declares and makes a distribution to P of $100 as a dividend on the preferred stock and $100 as a dividend on the common stock. The taxable income and distributions result in no Year 1 adjustment under paragraph (b) of this section for either the common or preferred stock. For example, if T merges into S, S is treated, as the context may require, as a successor to T and as becoming a member of the group. However, as in paragraph (b) of this *Example 3,* the redetermination under paragraph (c)(4) of this section is made by reallocating a $200 positive adjustment for Year 1 (S's net adjustment described in paragraph (b) of this section, determined without taking distributions into account) to the preferred stock. Consequently, the preferred stock has a $100 positive cumulative adjustment ($200 of taxable income, less a $100 distribution with respect to the preferred stock) and the common stock has a $100 negative cumulative adjustment (for the distribution).

(g) *Convertible preferred stock.* The facts are the same as in paragraph (a) of this *Example 3,* except that the preferred stock is convertible into common stock that is identical to the common stock already outstanding, the holders of the preferred stock convert the stock at the close of Year 2, and no stock is sold until the close of Year 5. Under paragraph (c)(4) of this section, the $200 positive adjustment for Year 1 is reallocated entirely to the preferred stock immediately before the conversion. The newly issued common stock is treated as a second class of S common stock, and adjustments under paragraph (b) of this section are allocated between the original and the new common stock under paragraph (c)(2)(ii) of this section. Although the preferred stock is converted to common stock, the $200 adjustment to the preferred stock is not subsequently reallocated between the original and the new common stock. Because the original and the new stock are equivalent, adjustments under paragraph (b) of this section for subsequent periods are allocated equally to each share.

(h) *Prior use of allocations.* The facts are the same as in paragraph (a) of this *Example 3,* except that P sells 10% of S's common stock at the close of Year 1, and the remaining 90% at the close of Year 2. P's basis in the common stock sold in Year 1 reflects $10 of the adjustment allocated to the common stock for Year 1. Under paragraph (c)(4)(ii) of this section, because $10 of the Year 1 adjustment was used in determining P's gain or loss, only $90 is reallocated to the preferred stock, and $10 remains allocated to the common stock sold.

(i) *Lower-tier members.* The facts are the same as in paragraph (a) of this *Example 3,* except that P owns only S's common stock, and P is also a subsidiary. If there is a redetermination under paragraph (c)(4) of this section by a member owning P's stock, a redetermination with respect to S's stock must be made first, and the effect of that redetermination on P's adjustments is taken into account under paragraph (b) of this section. However, as in paragraph (h) of this *Example 3,* to the extent an amount of the initial adjustments with respect to S's common stock have already been tiered up and used by a member owning P's stock, that amount remains with S's common stock (and the higher-tier member using the adjustment with respect to P's stock), and may not be reallocated to S's preferred stock.

Example 4. Allocation to preferred stock between groups. (a) *Facts.* P owns all of S's only class of stock, and S owns all of T's common and preferred stock. The preferred stock has a $100 annual, cumulative preference as to dividends. For Year 1, T has $200 of taxable income, the first $100 of which is allocated to the preferred stock and the remaining $100 of which is allocated to the common stock, and S has no adjustments other than the amounts tiered up from T. S and T have no adjustments under paragraph (b) of this section for Years 2 and 3. X, the common parent of another consolidated group, purchases all of S's stock at the close of Year 3, and S and T become members of the X group. For Year 4, T has $200 of taxable income, and S has no adjustments other than the amounts tiered up from T.

(b) *Analysis for Years 1 through 3.* Under paragraph (c)(4) of this section, the allocation of S's adjustments under paragraph (b) of this section (determined without taking distributions into account) must be redetermined as of the time P sells S's stock. As a result of this redetermination, T's common stock has no positive or negative adjustment and the preferred stock has a $200 positive adjustment.

(c) *Analysis for Year 4.* Under paragraph (c)(3) of this section, the allocation of T's $200 positive adjustment in Year 4 to T's preferred stock with respect to arrearages is made by taking into account the consolidated return years of both the P group and the X group. Thus, the allocation of the $200 positive adjustment for Year 4 to T's preferred stock is not treated as an allocation for a period for which the preferred stock is owned by a nonmember. Thus, the $200 adjustment is reflected in S's basis in T's preferred stock under paragraph (b) of this section.

(d) *Definitions.* For purposes of this section—

(1) *Class*. The shares of a member having the same material terms (without taking into account voting rights) are treated as a single class of stock.

(2) *Preferred stock*. Preferred stock is stock that is limited and preferred as to dividends and has a liquidation preference. A class of stock that is not described in section 1504(a)(4), however, is not treated as preferred stock for purposes of paragraph (c) of this section if members own less than 80% of each class of common stock (determined without taking this paragraph (d)(2) into account).

(3) *Common stock*. Common stock is stock that is not preferred stock.

(4) *Becoming a nonmember*. A member is treated as becoming a nonmember if it has a separate return year (including another group's consolidated return year). For example, S may become a nonmember if it issues additional stock to nonmembers, but S does not become a nonmember as a result of its complete liquidation.

(e) *Anti-avoidance rule*—(1) *General rule*. If any person acts with a principal purpose contrary to the purposes of this section, to avoid the effect of the rules of this section or apply the rules of this section to avoid the effect of any other provision of the consolidated return regulations, adjustments must be made as necessary to carry out the purposes of this section.

(2) *Examples*. The principles of this paragraph (e) are illustrated by the following examples.

Example 1. Preferred stock treated as common stock. (a) *Facts*. S has 100 shares of common stock and 100 shares of preferred stock described in section 1504(a)(4). P owns 80 shares of S's common stock and all of S's preferred stock. The shareholders expect that S will have negative adjustments under paragraph (b) of this section for Years 1 and 2 (all of which will be allocable to S's common stock), the negative adjustments will have no significant effect on the value of S's stock, and S will have offsetting positive adjustments thereafter. When the preferred stock was issued, P intended to cause S to recapitalize the preferred stock into additional common stock at the end of Year 2 in a transaction described in section 368(a)(1)(E). P's temporary ownership of the preferred stock is with a principal purpose to limit P's basis reductions under paragraph (b) of this section to 80% of the anticipated negative adjustments. The recapitalization is intended to cause significantly more than 80% of the anticipated positive adjustments to increase P's basis in S's stock because of P's increased ownership of S's common stock immediately after the recapitalization.

(b) *Analysis*. S has established a transitory capital structure with a principal purpose to enhance P's basis in S's stock under this section. Under paragraph (e)(1) of this section, all of S's common and preferred stock is treated as a single class of common stock in Years 1 and 2 for purposes of this section. Thus, S's items are allocated under the principles of paragraph (c)(2)(ii) of this section, and P decreases its basis in both the common and preferred stock accordingly.

Example 2. Contribution of appreciated property. (a) *Facts*. P owns all of the stock of S and T, and S and T each own 50% of the stock of U. P's S stock has a $150 basis and $200 value, and P's T stock has a $200 basis and $200 value. With a principal purpose to eliminate P's gain from an anticipated sale of S's stock, T contributes to U an asset with a $100 value and $0 basis, and S contributes $100 cash. U sells T's asset and recognizes a $100 gain that results in a $100 positive adjustment under paragraph (b) of this section.

(b) *Analysis*. Under paragraph (c)(2) of this section, U's adjustment ordinarily would be allocated equally to each share of U's stock. If so allocated, P's basis in S's stock would increase from $150 to $200 and P would recognize no gain from the sale of S's stock for $200. Under paragraph (e)(1) of this section, however, because T transferred an appreciated asset to U with a principal purpose to shift a portion of the stock basis increase from P's stock in T to P's stock in S, the allocation of the $100 positive adjustment under paragraph (c) of this section between the shares of U's stock must take into account the contribution. Consequently, all $100 of the positive adjustment is allocated to the U stock owned by T, rather than $50 to the U stock owned by S and $50 to the U stock owned by T. P's basis in S's stock remains $150, and its basis in T's stock increases to $300. Thus, P recognizes a $50 gain from its sale of S's stock for $200.

Example 3. Reorganizations. (a) *Facts*. P forms S with an $800 contribution, $200 of which is in exchange for S's preferred stock described in section 1504(a)(4) and the balance of which is for S's common stock. For Years 1 through 3, S has a total of $160 of ordinary income, $60 of which is distributed with respect to the preferred stock in satisfaction of its $20 annual preference as to dividends. Under this section, P's basis in S's preferred stock is unchanged, and its basis in S's common stock is increased from $600 to $700. To reduce its gain from an anticipated sale of S's preferred stock, P forms T at the close of Year 3 with a contribution of all of

S's stock in exchange for corresponding common and preferred stock of T in a transaction to which section 351 applies. At the time of the contribution, the fair market value of the common stock is $700 and the fair market value of the preferred stock is $300 (due to a decrease in prevailing market interest rates). P subsequently sells T's preferred stock for $300.

(b) *Analysis.* Under section 358(b), P ordinarily has a $630 basis in T's common stock (70% of the $900 aggregate stock basis) and a $270 basis in T's preferred stock (30% of the $900 aggregate stock basis). However, because P transferred S's stock to T with a principal purpose to shift the allocation of basis adjustments under this section, adjustments are made under paragraph (e)(1) of this section to preserve the allocation under this section. Thus, P has a $700 basis in T's common stock and a $200 basis in T's preferred stock. Consequently, P recognizes a $100 gain from the sale of T's preferred stock.

Example 4. Post-deconsolidation basis adjustments. (a) *Facts.* For Year 1, the P group has $40 of taxable income when determined by including only S's items of income, gain, deduction, and loss taken into account, and P increases its basis in S's stock by $40 under paragraph (b) of this section. P anticipates that S will have a $40 ordinary loss for Year 2 that will be carried back and offset S's income in Year 1 and result in a $40 reduction to P's basis in S's stock for Year 2 under paragraph (b) of this section. With a principal purpose to avoid the reduction, P causes S to issue voting preferred stock that results in S becoming a nonmember at the beginning of Year 2. (Section 1.1502–20(b) does not reduce P's basis in the S stock as a result of S's deconsolidation.) As anticipated, S has a $40 loss for Year 2, which is carried back to Year 1 and offsets S's income from Year 1.

(b) *Analysis.* Under paragraph (e)(1) of this section, because P caused S to become a nonmember with a principal purpose to absorb S's loss but avoid the corresponding negative adjustment under this section, and P bears a substantial portion of the loss because of its continued ownership of S common stock, the basis of P's common stock in S is decreased by $40 for Year 2. (If P has less than a $40 basis in the retained S stock, P must recognize income for Year 2 to the extent of the excess.) Section 1504(a)(3) limits the ability of S to subsequently rejoin the P group's consolidated return.

(c) *Carryback to pre-consolidation year.* The facts are the same as in paragraph (a) of this *Example 4*, except that P anticipates that S's loss will be carried back and absorbed in a separate return year of S before Year 1 (rather than to the P group's consolidated return for Year 1). Although P causes S to become a nonmember with a principal purpose to avoid the negative adjustment under this section, and P bears a substantial portion of the loss because of its continued ownership of S common stock, both S's income and loss are taken into account under the separate return rules. Consequently, no one has acted with a principal purpose contrary to the purposes of this section, and no adjustments are necessary to carry out the purposes of this section.

Example 5. Pre-consolidation basis adjustments. (a) *Facts.* P forms S with a $100 contribution, and S becomes a member of the P affiliated group which does not file consolidated returns. For Years 1 through 3, S earns $300. P anticipates that it will elect under section 1501 for the P group to begin filing consolidated returns in Year 5. In anticipation of filing consolidated returns, and to avoid the negative stock basis adjustment that would result under paragraph (b) of this section from distributing S's earnings after Year 5, P causes S to distribute $300 during Year 4 as a qualifying dividend within the meaning of section 243(b). There is no plan or intention to recontribute the funds to S after the distribution.

(b) *Analysis.* Although S's distribution of $300 is with a principal purpose to avoid a corresponding negative adjustment under this section, the $300 was both earned and distributed entirely under the separate return rules. Consequently, P and S have not acted with a principal purpose contrary to the purposes of this section, and no adjustments are necessary to carry out the purposes of this section.

(f) *Predecessors and successors.* For purposes of this section, any reference to a corporation or to a share of stock includes a reference to a successor or predecessor as the context may require. A corporation is a successor if the basis of its assets is determined, directly or indirectly, in whole or in part, by reference to the basis of another corporation (the predecessor). For example, if T merges into S, S is treated, as the context may require, as a successor to T and as becoming a member of the group. A share is a successor if its basis is determined, directly or indirectly, in whole or in part, by reference to the basis of another share (the predecessor).

(g) *Recordkeeping.* Adjustments under this section must be reflected annually on permanent records (including work papers). See also section 6001, requiring records to be maintained. The group must be able to identify from these permanent records the amount and allocation of adjustments, including the nature of any tax-exempt income and

noncapital, nondeductible expenses, so as to permit the application of the rules of this section for each year.

(h) *Effective date*—(1) *General rule.* This section applies with respect to determinations of the basis of the stock of a subsidiary (e.g., for determining gain or loss from a disposition of stock) in consolidated return years beginning on or after January 1, 1995. If this section applies, basis must be determined or redetermined as if this section were in effect for all years (including, for example, the consolidated return years of another consolidated group to the extent adjustments from those years are still reflected). For example, if the portion of a consolidated net operating loss carryover attributable to S expired in 1990 and is treated as a noncapital, nondeductible expense under paragraph (b) of this section, it is taken into account in tax years beginning on or after January 1, 1995 as a negative adjustment for 1990. Any such determination or redetermination does not, however, affect any prior period. Thus, the negative adjustment for S's noncapital, nondeductible expense is not taken into account for tax years beginning before January 1, 1995.

(2) *Dispositions of stock before effective date*—(i) *In general.* If P disposes of stock of S in a consolidated return year beginning before January 1, 1995, the amount of P's income, gain, deduction, or loss, and the basis reflected in that amount, are not redetermined under this section. See §1.1502–19 as contained in the 26 CFR part 1 edition revised as of April 1, 1994 for the definition of disposition, and paragraph (h)(5) of this section for the rules applicable to such dispositions.

(ii) *Lower-tier members.* Although P disposes of S's stock in a tax year beginning before January 1, 1995, S's determinations or adjustments with respect to the stock of a lower-tier member with which it continues to file a consolidated return are redetermined in accordance with the rules of this section (even if they were previously taken into account by P and reflected in income, gain, deduction, or loss from the disposition of S's stock). For example, assume that P owns all of S's stock, S owns all of T's stock, and T owns all of U's stock. If S sells 80% of T's stock in a tax year beginning before January 1, 1995 (the effective date), the amount of S's income, gain, deduction, or loss from the sale, and the stock basis adjustments reflected in that amount, are not redetermined if P sells S's stock after the effective date. If S sells the remaining 20% of T's stock after the effective date, S's stock basis adjustments with respect to that T stock are also not redetermined because T became a nonmember before the effective date. However, if T and U continue to file a consolidated return with each other and T sells U's stock after the effective date, T's stock basis adjustments with respect to U's stock are redetermined (even though some of those adjustments may have been taken into account by S in its prior sale of T's stock before the effective date).

(iii) *Deferred amounts.* For purposes of this paragraph (h)(2), a disposition does not include a transaction to which §1.1502–13, §1.1502–13T, §1.1502–14, or §1.1502–14T applies. Instead, the transaction is deemed to occur as the income, gain, deduction, or loss (if any) is taken into account.

(3) *Distributions*—(i) *Deemed dividend elections.* If there is a deemed distribution and recontribution pursuant to §1.1502–32(f)(2) as contained in the 26 CFR part 1 edition revised as of April 1, 1994 in a consolidated return year beginning before January 1, 1995, the deemed distribution and recontribution under the election are treated as an actual distribution by S and recontribution by P as provided under the election.

(ii) *Affiliated earnings and profits.* This section does not apply to reduce the basis in S's stock as a result of a distribution of earnings and profits accumulated in separate return years, if the distribution is made in a consolidated return year beginning before January 1, 1995, and the distribution does not cause a negative adjustment under the investment adjustment rules in effect at the time of the distribution. See paragraph (h)(5) of this section for the rules in effect with respect to the distribution.

(4) *Expiring loss carryovers.* If S became a member of a consolidated group in a consolidated return year beginning

before January 1, 1995, and S had a loss carryover from a separate return limitation year at that time, the group does not treat any expiration of the loss carryover (even if in a tax year beginning on or after January 1, 1995) as a noncapital, nondeductible expense resulting in a negative adjustment under this section. If S becomes a member of a consolidated group in a consolidated return year beginning on or after January 1, 1995, and S has a loss carryover from a separate return limitation year at that time, adjustments with respect to the expiration are determined under this section.

(5) *Prior law*—(i) *In general*. For prior determinations, see prior regulations under section 1502 as in effect with respect to the determination. See, e.g., §§ 1.1502–32 and 1.1502–32T as contained in the 26 CFR part 1 edition revised as of April 1, 1994.

(ii) *Continuing basis reductions for certain deconsolidated subsidiaries*. If a subsidiary ceases to be a member of a group in a consolidated return year beginning before January 1, 1995, and its basis was subject to reduction under § 1.1502–32T or § 1.1502–32(g) as contained in the 26 CFR part 1 edition revised as of April 1, 1994, its basis remains subject to reduction under those principles. For example, if S ceased to be a member in 1990, and P's basis in any retained S stock was subject to a basis reduction account, the basis remains subject to reduction. Similarly, if an election could be made to apply § 1.1502–32T instead of § 1.1502–32(g), the election remains available. However, §§ 1.1502–32T and 1.1502–32(g) do not apply as a result of a subsidiary ceasing to be a member in tax years beginning on or after January 1, 1995.

[T.D. 8560, 59 FR 41685, Aug. 15, 1994, as amended by T.D. 8677, 61 FR 33323, June 27, 1996; T.D. 8560, 62 FR 12098, Mar. 14, 1997; T.D. 8823, 64 FR 36099, July 2, 1999]

§ 1.1502–33 Earnings and profits.

(a) *In general*—(1) *Purpose*. This section provides rules for adjusting the earnings and profits of a subsidiary (S) and any member (P) owning S's stock. These rules modify the determination of P's earnings and profits under applicable rules of law, including section 312, by adjusting P's earnings and profits to reflect S's earnings and profits for the period that S is a member of the consolidated group. The purpose for modifying the determination of earnings and profits is to treat P and S as a single entity by reflecting the earnings and profits of lower-tier members in the earnings and profits of higher-tier members and consolidating the group's earnings and profits in the common parent. References in this section to earnings and profits include deficits in earnings and profits.

(2) *Application of other rules of law*. The rules of this section are in addition to other rules of law. For example, the allowance for depreciation is determined in accordance with section 312(k). P's earnings and profits must not be adjusted under this section and other rules of law in a manner that has the effect of duplicating an adjustment. For example, if S's earnings and profits are reflected in P's earnings and profits under paragraph (b) of this section, and S transfers its assets to P in a liquidation to which section 332 applies, S's earnings and profits that P succeeds to under section 381 must be adjusted to prevent duplication.

(b) *Tiering up earnings and profits*—(1) *General rule*. P's earnings and profits are adjusted under this section to reflect changes in S's earnings and profits in accordance with the applicable principles of § 1.1502–32, consistently applied, and an adjustment to P's earnings and profits for a tax year under this paragraph (b)(1) is treated as earnings and profits of P for the tax year in which the adjustment arises. Under these principles, for example, the adjustments are made as of the close of each consolidated return year, and as of any other time if a determination at that time is necessary to determine the earnings and profits of any person. Similarly, S's earnings and profits are allocated under the principles of § 1.1502–32(c), and the adjustments are applied in the order of the tiers, from the lowest to the highest. However, modifications to the principles include:

(i) The amount of P's adjustment is determined by reference to S's earnings and profits, rather than S's taxable and tax-exempt items (and therefore, for

example, the deferral of a negative adjustment for S's unabsorbed losses does not apply).

(ii) The tax sharing rules under paragraph (d) of this section apply rather than those of § 1.1502–32(b)(3)(iv)(D).

(2) *Affiliated earnings and profits.* The reduction in S's earnings and profits under section 312 from a distribution of earnings and profits accumulated in separate return years of S that are not separate return limitation years does not tier up to P's earnings and profits. Thus, the increase in P's earnings and profits under section 312 from receipt of the distribution is not offset by a corresponding reduction.

(3) *Examples*—(i) *In general.* For purposes of the examples in this section, unless otherwise stated, P owns all of the only class of S's stock, the stock is owned for the entire year, S owns no stock of lower-tier members, the tax year of all persons is the calendar year, all persons use the accrual method of accounting, the facts set forth the only corporate activity, preferred stock is described in section 1504(a)(4), all transactions are between unrelated persons, and tax liabilities are disregarded.

(ii) *Tiering up earnings and profits.* The principles of this paragraph (b) are illustrated by the following examples.

Example 1. Tier-up and distribution of earnings and profits. (a) *Facts.* P forms S in Year 1 with a $100 contribution. S has $100 of earnings and profits for Year 1 and no earnings and profits for Year 2. During Year 2, S declares and distributes a $50 dividend to P.

(b) *Analysis.* Under paragraph (b)(1) of this section, S's $100 of earnings and profits for Year 1 increases P's earnings and profits for Year 1. P has no additional earnings and profits for Year 2 as a result of the $50 distribution in Year 2, because there is a $50 increase in P's earnings and profits as a result of the receipt of the dividend and a corresponding $50 decrease in S's earnings and profits under section 312(a) that is reflected in P's earnings and profits under paragraph (b)(1) of this section.

(c) *Distribution of current earnings and profits.* The facts are the same as in paragraph (a) of this *Example 1,* except that S distributes the $50 dividend at the end of Year 1 rather than during Year 2. Under paragraph (b)(1) of this section, P's earnings and profits are increased by $100 (S's $50 of undistributed earnings and profits, plus P's receipt of the $50 distribution). Thus, S's earnings and profits increase by $50 and P's earnings and profits increase by $100.

(d) *Affiliated earnings and profits.* The facts are the same as in paragraph (a) of this *Example 1*, except that P and S do not begin filing consolidated returns until Year 2. Because P and S file separate returns for Year 1, P's basis in S's stock remains $100 under § 1.1502–32 and this section, S has $100 of earnings and profits, and none of S's earnings and profits is reflected in P's earnings and profits under paragraph (b) of this section. S's distribution in Year 2 ordinarily would reduce S's earnings and profits but not increase P's earnings and profits. (P's $50 of earnings and profits from the dividend would be offset by S's $50 reduction in earnings and profits that tiers up under paragraph (b) of this section.) However, under paragraph (b)(2) of this section, the negative adjustment for S's distribution to P does not apply. Thus, S's distribution reduces its earnings and profits by $50 but increases P's earnings and profits by $50. (If S's earnings and profits had been accumulated in a separate return limitation year, paragraph (b)(2) of this section would not apply and the distribution would reduce S's earnings and profits but not increase P's earnings and profits.)

(e) *Earnings and profits deficit.* Assume instead that after P forms S in Year 1 with a $100 contribution, S borrows additional funds and has a $150 deficit in earnings and profits for Year 1. The corresponding loss for tax purposes is not absorbed in Year 1, and is included in the group's consolidated net operating loss carried forward to Year 2. Under paragraph (b)(1) of this section, however, S's $150 deficit in earnings and profits decreases P's earnings and profits for Year 1 by $150. (Absorption of the loss in a later tax year has no effect on the earnings and profits of P and S.)

Example 2. Section 355 distribution. (a) *Facts.* P owns all of S's stock and S owns all of T's stock. For Year 1, T has $100 of earnings and profits. Under paragraph (b)(1) of this section, the earnings and profits of T tier up to S and to P. S and P have no other earnings and profits for Year 1. S distributes T's stock to P at the end of Year 1 in a distribution to which section 355 applies.

(b) *Analysis.* Because S's distribution of T's stock is a distribution to which section 355 applies, the applicable principles of § 1.1502–32(b)(2)(iv) do not require P's earnings and profits to be adjusted by reason of the distribution. In addition, although S's earnings and profits may be reduced under section 312(h) as a result of the distribution, the applicable principles of § 1.1502–32(b)(3)(iii) do not require P's earnings and profits to be adjusted to reflect this reduction in S's earnings and profits.

Example 3. Allocating earnings and profits among shares. P owns 80% of S's stock throughout Year 1. For Year 1, S has $100 of

earnings and profits. Under paragraph (b)(1) of this section, $80 of S's earnings and profits is allocated to P based on P's ownership of S's stock. Accordingly, $80 of S's earnings and profits for Year 1 is reflected in P's earnings and profits for Year 1.

(c) *Special rules*. For purposes of this section—

(1) *Stock of members*. For purposes of determining P's earnings and profits from the disposition of S's stock, P's basis in S's stock is adjusted to reflect S's earnings and profits determined under paragraph (b) of this section, rather than under § 1.1502–32. For example, P's basis in S's stock is increased by positive earnings and profits and decreased by deficits in earnings and profits. Similarly, P's basis in S's stock is not reduced for distributions to which paragraph (b)(2) of this section applies (affiliated earnings and profits). P may have an excess loss account in S's stock for earnings and profits purposes (whether or not there is an excess loss account under § 1.1502–32), and the excess loss account is determined, adjusted, and taken into account in accordance with the principles of §§ 1.1502–19 and 1.1502–32.

(2) *Intercompany transactions*. Intercompany items and corresponding items are not reflected in earnings and profits before they are taken into account under § 1.1502–13. See § 1.1502–13 for the applicable rules and definitions.

(3) *Example*. The principles of this paragraph (c) are illustrated by the following example.

Example. Adjustments to stock basis. (a) *Facts*. P forms S in Year 1 with a $100 contribution. For Year 1, S has $75 of taxable income and $100 of earnings and profits. For Year 2, S has no taxable income or earnings and profits, and S declares and distributes a $50 dividend to P. P sells all of S's stock for $150 at the end of Year 2.

(b) *Analysis*. Under paragraph (c)(1) of this section, P's basis in S's stock for earnings and profits purposes immediately before the sale is $150 (the $100 initial basis, plus S's $100 of earnings and profits for Year 1, minus the $50 distribution of earnings and profits in Year 2). Thus, P recognizes no gain or loss from the sale of S's stock for earnings and profits purposes.

(c) *Earnings and profits deficit*. Assume instead that S has a $100 tax loss and earnings and profits deficit for Year 1. The tax loss is not absorbed in Year 1 and is included in the group's consolidated net operating loss carried forward to Year 2. Under paragraph (b) of this section, S's $100 deficit in earnings and profits decreases P's earnings and profits for Year 1. Under paragraph (c) of this section, P decreases its basis in S's stock for purposes of determining earnings and profits from $100 to $0. (If S had borrowed an additional $50 that it also lost in Year 1, P would have decreased its earnings and profits for Year 1 by the additional $50, and P would have had a $50 excess loss account in S's stock for earnings and profits purposes, which would be taken into account in determining P's earnings and profits from its sale of S's stock.)

(d) *Affiliated earnings and profits*. Assume instead that P and S do not begin filing consolidated returns until Year 2. Under paragraph (b) of this section, the negative adjustment under § 1.1502–32(b) for distributions does not apply to S's distribution of earnings and profits accumulated in a separate return year that is a not separate return limitation year. Thus, P's basis in S's stock for earnings and profits purposes remains $100, and P has $50 of earnings and profits from the sale of S's stock.

(d) *Federal income tax liability*—(1) *In general*—(i) *Extension of tax allocations*. Section 1552 allocates the tax liability of a consolidated group among its members for purposes of determining the amounts by which their earnings and profits are reduced for taxes. Section 1552 does not reflect the absorption by one member of another member's tax attributes (e.g., losses, deductions and credits). For example, if P's $100 of income is offset by S's $100 of deductions, consolidated tax liability is $0 and no amount is allocated under section 1552. However, the group may elect under this paragraph (d) to allocate additional amounts to reflect the absorption by one member of the tax attributes of another member. Permissible methods are set forth in paragraphs (d)(2) through (4) of this section, and election procedures are provided in paragraph (d)(5) of this section. Allocations under this paragraph (d) must be reflected annually on permanent records (including work papers). Any computations of separate return tax liability are subject to the principles of section 1561.

(ii) *Effect of extended tax allocations*. The amounts allocated under this paragraph (d) are treated as allocations of tax liability for purposes of § 1.1552–

1(b)(2). For example, if P's taxable income is offset by S's loss, and tax liability is allocated under the percentage method of paragraph (d)(3) of this section, P's earnings and profits are reduced as if its income were subject to tax, P is treated as liable to S for the amount of the tax, and corresponding adjustments are made to S's earnings and profits. If the liability of one member to another is not paid, the amount not paid generally is treated as a distribution, contribution, or both, depending on the relationship between the members.

(2) *Wait-and-see method.* The wait-and-see method under this paragraph (d)(2) is derived from Securities and Exchange Commission procedures. In the year that a member's tax attribute is absorbed, the group's consolidated tax liability is allocated in accordance with the group's method under section 1552. When, in effect, the member with the tax attribute could have absorbed the attribute on a separate return basis in a later year, a portion of the group's consolidated tax liability for the later year that is otherwise allocated to members under section 1552 is reallocated. The reallocation takes into account all consolidated return years to which this paragraph (d) applies (the computation period), and is determined by comparing the tax allocated to a member during the computation period with the member's tax liability determined as if it had filed separate returns during the computation period.

(i) *Cap on allocation under section 1552.* A member's allocation under section 1552 for a tax year may not exceed the excess, if any, of—

(A) The total of the tax liabilities of the member for the computation period (including the current year), determined as if the member had filed separate returns; over

(B) The total amount allocated to the member under section 1552 and this paragraph (d) for the computation period (except the current year).

(ii) *Reallocation of capped amounts.* To the extent that the amount allocated to a member under section 1552 exceeds the limitation under paragraph (d)(2)(i) of this section, the excess is allocated among the remaining members in proportion to (but not to exceed the amount of) each member's excess, if any, of—

(A) The total of the tax liabilities of the member for the computation period (including the current year), determined as if the member had filed separate returns; over

(B) The total amount allocated to the member under section 1552 and this paragraph (d) for the computation period (including for the current year only the amount allocated under section 1552).

(iii) *Reallocation of excess capped amounts.* If the reductions under paragraph (d)(2)(i) of this section exceed the amounts allocable under paragraph (d)(2)(ii) of this section, the excess is allocated among the members in accordance with the group's method under section 1552 without taking this paragraph (d)(2) into account.

(3) *Percentage method.* The percentage method under this paragraph (d)(3) allocates tax liability based on the absorption of tax attributes, without taking into account the ability of any member to subsequently absorb its own tax attributes. The allocation under this method is in addition to the allocation under section 1552.

(i) *Decreased earnings and profits.* A member's allocation under section 1552 for any year is increased, thereby decreasing its earnings and profits, by a fixed percentage (not to exceed 100%) of the excess, if any, of—

(A) The member's separate return tax liability for the consolidated return year as determined under §1.1552–1(a)(2)(ii); over

(B) The amount allocated to the member under section 1552.

(ii) *Increased earnings and profits.* An amount equal to the total decrease in earnings and profits under paragraph (d)(3)(i) of this section (including amounts allocated as a result of a carryback) increases the earnings and profits of the members whose attributes are absorbed, and is allocated among them in a manner that reasonably reflects the absorption of the tax attributes.

(4) *Additional methods.* The absorption by one member of the tax attributes of another member may be reflected under any other method approved in writing by the Commissioner.

(5) *Election of allocation method*—(i) *In general*. Tax liability may be allocated under this paragraph (d) only if an election is filed with the group's first return. The election must—

(A) Be made in a separate statement entitled ''ELECTION TO ALLOCATE TAX LIABILITY UNDER §1.1502–33(d)'';

(B) State the allocation method elected under §1.1502–33(d) and under section 1552;

(C) If the percentage method is elected, state the percentage (not to exceed 100%) to be used; and

(D) If a method is permitted under paragraph (d)(4) of this section, attach evidence of approval of the method by the Commissioner.

(ii) *Consent*—(A) *Electing or changing methods*. An election for a later year, or an election to change methods, may be made only with the written consent of the Commissioner.

(B) *Prior law elections*. An election in effect for the last tax year beginning before January 1, 1995, remains in effect under this section. However, a group may elect to conform its earnings and profits computations to the method described in §1.1502–32(b)(3)(iv)(D) (the percentage method, using a 100% allocation), whether or not it has previously made an election for earnings and profits purposes. If a conforming election is made, the group must make all adjustments necessary to prevent amounts from being duplicated or omitted. The conforming election is made by attaching a statement entitled ''ELECTION TO CONFORM TAX ALLOCATIONS UNDER §§1.1502–32 and 1.1502–33(d)'' to the consolidated group's return for its first tax year beginning on or after January 1, 1995. The statement must be signed by the common parent, and must specify whether the method is conformed only for years beginning on or after January 1, 1995 or as if the method were in effect for all prior years. The statement must also describe the adjustments made by reason of the change (e.g., to reflect prior use of earnings and profits).

(6) *Examples*. The principles of this paragraph (d) are illustrated by the following examples.

Example 1. Wait-and-see method. (a) *Facts*. P owns all of the stock of S1 and S2. The P group uses the wait-and-see method of allocation under paragraph (d)(2) of this section in conjunction with §1.1552–1(a)(1). For Year 1, each member's taxable income, both for purposes of §1.1552–1(a)(1) and redetermined as if the member had filed separate returns, is as follows: P $0, S1 $2,000, and S2 ($1,000). Thus, the P group's consolidated tax liability for Year 1 is $340 (assuming a 34% tax rate).

(b) *Analysis*. Under §1.1552–1(a)(1)(i), the tax liability of the P group is allocated among the members in accordance with the portion of the consolidated taxable income attributable to each member having taxable income. Thus, all of the P group's $340 consolidated tax liability is allocated to S1. As a result, S1 decreases its earnings and profits under section 1552 by $340 (even if S1 does not pay the tax liability). No further allocations are made under paragraph (d)(2) of this section because S2 cannot yet absorb its loss on a separate return basis.

(c) *Payment of tax liability*. If S1 pays the $340 tax liability, there is no further effect on the income, earnings and profits, or stock basis of any member. If P pays the $340 tax liability (and the payment is not a loan from P to S1), P is treated as making a $340 contribution to the capital of S1; if S2 pays the $340 tax liability (and the payment is not a loan from S2 to S1), S2 is treated as making a $340 distribution to P with respect to its stock, and P is treated as making a $340 contribution to the capital of S1. See §1.1552–1(b)(2).

(d) *Year 2*. For Year 2, each member's taxable income, under §1.1552–1(a)(1)(ii) and redetermined as if the member had filed separate returns, without taking into account any carryover from Year 1, is as follows: P $0, S1 $1,000, and S2 $3,000. Thus, the P group's consolidated tax liability for Year 2 is $1,360 (assuming a 34% tax rate). Of this amount, section 1552 would allocate $340 to S1 and $1,020 to S2. However, under paragraph (d)(2)(i) of this section, no more than $680 may be allocated to S2. This is because S2 would have had an aggregate tax liability of $680 if it had filed separate returns for Years 1 and 2 (a $0 tax liability for Year 1, and a $680 tax liability for Year 2, taking into account a $1,000 net operating loss carryover from Year 1). Under paragraph (d)(2)(ii) of this section, the entire excess of $340 which would otherwise be allocated to S2 under §1.1552–1(a)(1) is allocated to S1. This is because S1 would have had an additional $340 of aggregate tax liability if it had filed separate returns for Years 1 and 2 (a $680 tax liability for Year 1, and a $340 tax liability for Year 2, not taking into account S2's $1,000 net operating loss for Year 1). The effect of the allocation of $680 to S1 and $680 to S2 is determined under §1.1552–1(b)(2).

Example 2. Percentage method. (a) *Facts*. The facts are the same as in *Example 1*, but the P

group uses the percentage method of allocation under paragraph (d)(3) of this section, with a percentage of 100%. In addition, the taxable incomes and losses of the members are the same if computed as provided in § 1.1552–1(a)(2)(ii).

(b) *Analysis*. Under § 1.1552–1(a)(2)(ii), $340 of tax liability is allocated to S1 for Year 1. Under paragraph (d)(3)(i) of this section, S1 is allocated another $340 of tax liability because S1 would have had a $680 tax liability if it had filed separate returns but only $340 is allocated to S1 under section 1552. Thus, S1's earnings and profits are decreased by the $680 total. Under paragraph (d)(3)(ii) of this section, S2's earnings and profits are increased by $340 because the additional $340 allocated to S1 under paragraph (d)(3)(i) of this section is attributable to the absorption of S2's losses.

(c) *Payment of tax liability*. If S1 pays the $340 tax liability of the P group and pays $340 to S2, the Year 1 tax liability results in no further adjustments to the income, earnings and profits, or basis of any member's stock. If S1 pays the $340 tax liability of the P group and pays the other $340 to P instead of S2 because, for example, of an agreement among the members, S2 is treated as distributing $340 to P with respect to its stock in the year that S1 makes the payment to P. See § 1.1552–1(b)(2).

(d) *Year 2*. For Year 2, $340 is allocated to S1 and $1,020 is allocated to S2 under section 1552. No additional amounts are allocated under paragraph (d)(3) of this section.

(e) *Deconsolidations*—(1) *In general*. Immediately before it becomes a nonmember, S's earnings and profits are eliminated to the extent they were taken into account by any member under this section. If S's earnings and profits are eliminated under this paragraph (e)(1), no corresponding adjustment is made to the earnings and profits of P (or any other member) under paragraph (b) of this section or to any basis in a member's stock under paragraph (c) of this section. For this purpose, S is treated as becoming a nonmember on the first day of its first separate return year (including another group's consolidated return year).

(2) *Acquisition of group*—(i) *Application*. This paragraph (e)(2) applies only if a consolidated group (the terminating group) ceases to exist as a result of—

(A) The acquisition by a member of another consolidated group of either the assets of the common parent of the terminating group in a reorganization described in section 381(a)(2), or the stock of the common parent of the terminating group; or

(B) The application of the principles of § 1.1502–75(d)(2) or (d)(3).

(ii) *General rule*. Paragraph (e)(1) of this section does not apply solely by reason of the termination of a group because it is acquired, if there is a surviving group that is, immediately thereafter, a consolidated group. Instead, the surviving group is treated as the terminating group for purposes of applying this paragraph (e) to the terminating group. This treatment does not apply, however, to members of the terminating group that are not members of the surviving consolidated group immediately after the terminating group ceases to exist (e.g., under section 1504(a)(3) relating to reconsolidation, or section 1504(c) relating to includible insurance companies).

(3) *Certain corporate separations and reorganizations*. The adjustments under paragraph (e)(1) of this section must be modified to the extent necessary to effectuate the principles of section 312(h). Thus, P's earnings and profits rather than S's earnings and profits may be eliminated immediately before S becomes a nonmember. P's earnings and profits are eliminated to the extent that its earnings and profits reflect S's earnings and profits after applying section 312(h) immediately after S becomes a nonmember (determined without taking this paragraph (e) into account).

(4) *Special uses of earnings and profits*. Paragraph (e)(1) of this section does not apply for purposes of determining—

(i) The extent to which a distribution is charged to reserve accounts under section 593(e);

(ii) The extent to which a distribution is taxable to the recipient under sections 805(a)(4) and 832; and

(iii) Any other special use identified in guidance published in the Internal Revenue Bulletin.

(5) *Example*. The principles of this paragraph (e) are illustrated by the following example.

Example. (a) *Facts*. Individuals A and B own all of P's stock, and P owns all of the stock of S and T, each with a $500 basis. For Year 1, S has $100 of earnings and profits and T has $50 of earnings and profits. Under paragraph (b)(1) of this section, the earnings and

profits of S and T tier up to P, and P has $150 of earnings and profits for Year 1. P sells all of S's stock for $600 at the close of Year 1.

(b) *Analysis*. Under paragraph (e)(1) of this section, S's $100 of earnings and profits is eliminated immediately before S becomes a nonmember because the earnings and profits are taken into account under paragraph (b) of this section in P's earnings and profits. However, no corresponding adjustment is made to P's earnings and profits or to P's basis in S's stock for purposes of earnings and profits. P's earnings and profits for Year 1 remain $150 following the sale of S's stock.

(c) *Forward merger*. The facts are the same as in paragraph (a) of this *Example*, except that, rather than P selling S's stock, S merges into a nonmember in a transaction described in section 368(a)(2)(D). Under paragraph (h) of this section, the nonmember is treated as a successor to S. Thus, as in paragraph (b) of this *Example*, S's $100 of earnings and profits is eliminated immediately before S ceases to be a member.

(d) *Acquisition of entire group*. The facts are the same as in paragraph (a) of this *Example*, except that X, the common parent of another consolidated group, purchases all of P's stock at the close of Year 1, and P sells S's stock during Year 3. Under paragraph (e)(2) of this section, the earnings and profits of S and T are not eliminated as a result of X purchasing P's stock. However, S's earnings and profits from consolidated return years of both the P group and the X group are eliminated immediately before S becomes a nonmember of the X group.

(e) *Earnings and profits deficit*. The facts are the same as in paragraph (d) of this *Example*, except that S has a $550 deficit in earnings and profits for Year 1. The effect of paragraph (e)(1) of this section is the same. Under paragraph (c)(1) of this section, P would have an excess loss account in S's stock for earnings and profits purposes under the principles of §§ 1.1502–19 and 1.1502–32, and, under the principles of § 1.1502–19(c)(2), the excess loss account is not taken into account as a result of X's purchase of P's stock. Under paragraph (e)(2) of this section, S's deficit is not eliminated under paragraph (e)(1) of this section immediately before X's purchase of P's stock. However, S's earnings and profits (or deficit) is eliminated immediately before S becomes a nonmember of the X group.

(f) *Section 355 distribution*. The facts are the same as in paragraph (a) of this *Example*, except that, rather than selling S's stock, P distributes S's stock to A at the close of Year 1 in a distribution to which section 355 applies. Under paragraph (e)(3) of this section, P's earnings and profits may be reduced under section 312(h) as a result of the distribution. To the extent that P's earnings and profits are reduced, S's earnings and profits are not eliminated under paragraph (e)(1) of this section.

(f) *Changes in the structure of the group*—(1) *Changes in the common parent*—(i) *General rule*. If P succeeds another corporation under the principles of § 1.1502–75(d) (2) or (3) as the common parent of a consolidated group (a group structure change), the earnings and profits of P are adjusted immediately after P becomes the new common parent to reflect the earnings and profits of the former common parent immediately before the former common parent ceases to be the common parent. The adjustment is made as if P succeeds to the earnings and profits of the former common parent in a transaction described in section 381(a). See § 1.1502–31 for the basis of the stock of members following a group structure change.

(ii) *Minority shareholders*. If the former common parent's stock is not wholly owned by members of the consolidated group immediately after the former common parent ceases to be the common parent, appropriate adjustments must be made to reflect in the new common parent only an allocable part of the former common parent's earnings and profits.

(iii) *Higher-tier members*. To the extent that earnings and profits are adjusted under this paragraph (f)(1), and the former common parent is owned by members other than P, the earnings and profits of the intermediate subsidiaries must be adjusted in accordance with the principles of this section.

(iv) *Example*. The principles of this paragraph (f)(1) are illustrated by the following example.

Example. (a) *Facts*. X is the common parent of a consolidated group with $100 of earnings and profits, and P is the common parent of another consolidated group with $20 of earnings and profits. P acquires all of X's stock at the close of Year 1 in exchange for 70% of P's stock. The exchange is a reverse acquisition under § 1.1502–75(d)(3), and the X group is treated as remaining in existence with P as its new common parent.

(b) *Adjustments for X group earnings and profits*. Under paragraph (f)(1) of this section, P's earnings and profits are adjusted immediately after P becomes the new common parent, to reflect X's $100 of earnings and profits immediately before X ceases to be the common parent. The adjustment is made as if P succeeds to X's earnings and profits in a transaction described in section 381(a). Thus, immediately after the acquisition, P has $120 of accumulated earnings and profits and X

continues to have $100 of accumulated earnings and profits.

(c) *Adjustments for P group earnings and profits.* Although the P group terminates on P's acquisition of X's stock, under paragraph (e)(2) of this section, no adjustments are made to the earnings and profits of any subsidiaries in the terminating P group.

(d) *Acquisition of separate return corporation.* The facts are the same as in paragraph (a) of this *Example,* except that, immediately before the acquisition of its stock by P, X is not affiliated with any other corporation. The exchange is a reverse acquisition under §1.1502–75(d)(3), and P is treated as the common parent of the X group. Consequently, the results are the same as in paragraphs (b) and (c) of this *Example.*

(2) *Change in the location of subsidiaries.* If the location of a member within a group changes, appropriate adjustments must be made to the earnings and profits of the members to prevent the earnings and profits from being eliminated. For example, if P transfers all of S's stock to another member in a transaction to which section 351 and §1.1502–13 apply, the transferee's earnings and profits are adjusted immediately after the transfer to reflect S's earnings and profits immediately before the transfer from consolidated return years. On the other hand, if the transferee purchases S's stock from P, the transferee's earnings and profits are not adjusted.

(g) *Anti-avoidance rule.* If any person acts with a principal purpose contrary to the purposes of this section, to avoid the effect of the rules of this section or apply the rules of this section to avoid the effect of any other provision of the consolidated return regulations, adjustments must be made as necessary to carry out the purposes of this section.

(h) *Predecessors and successors.* For purposes of this section, any reference to a corporation or to a share includes a reference to a successor or predecessor as the context may require. A corporation is a successor if its earnings and profits are determined, directly or indirectly, in whole or in part, by reference to the earnings and profits of another corporation (the predecessor). A share is a successor if its basis is determined, directly or indirectly, in whole or in part, by reference to the basis of another share (the predecessor).

(i) [Reserved]

(j) *Effective date*—(1) *General rule.* This section applies with respect to determinations of the earnings and profits of a member (e.g., for purposes of a characterizing a distribution to which section 301 applies) in consolidated return years beginning on or after January 1, 1995. If this section applies, earnings and profits must be determined or redetermined as if this section were in effect for all years (including, for example, the consolidated return years of another consolidated group to the extent the earnings and profits from those years are still reflected). For example, if a distribution by P to a nonmember shareholder in 1990 was a dividend because of an unabsorbed loss carryover attributable to S, P's earnings and profits in tax years beginning after January 1, 1995 are redetermined by taking into account a negative adjustment in the tax year S's loss arose and in 1990 for P's distribution, and any subsequent absorption of the loss has no effect on earnings and profits. Any such determination or redetermination does not, however, affect any prior period. Thus, the shareholder's treatment in 1990 of the distribution as a dividend (and the effect of the distribution on stock basis) is not redetermined under this section.

(2) *Dispositions of stock before effective date*—(i) *In general.* If P disposes of stock of S in a consolidated return year beginning before January 1, 1995, the amount of P's earnings and profits with respect to S are not redetermined under paragraph (j)(1) of this section. See §1.1502–19 as contained in the 26 CFR part 1 edition revised as of April 1, 1994 for the definition of disposition, and paragraph (j)(5) of this section for the rules applicable to such dispositions.

(ii) *Lower-tier members.* Although P disposes of S's stock in a tax year beginning before January 1, 1995, S's determinations or adjustments with respect to lower-tier members with which it continues to file a consolidated return are redetermined in accordance with the rules of this section (even if S's earnings and profits were previously taken into account by P). For example, assume that P owns all of S's stock, S owns all of T's stock, and

T owns all of U's stock. If S sells 80% of T's stock in a tax year beginning before January 1, 1995 (the effective date), the amount of S's earnings and profits from the sale, and the adjustments to stock basis for earnings and profits purposes that are reflected in that amount, are not redetermined if P sells S's stock after the effective date. If S sells the remaining 20% of T's stock after the effective date, S's stock basis adjustments with respect to that T stock are also not redetermined because T became a nonmember before the effective date. However, if T and U continue to file a consolidated return with each other, paragraph (e)(1) of this section did not apply, and T sells U's stock after the effective date, T's earnings and profits with respect to U are redetermined (even though some of the earnings and profits may have been taken into account by S in its prior sale of T's stock before the effective date).

(iii) *Deferred amounts*. For purposes of this paragraph (j)(2), a disposition does not include a transaction to which §1.1502–13, §1.1502–13T, §1.1502–14, or §1.1502–14T applies. Instead, the transaction is deemed to occur as the earnings and profits (if any) are taken into account.

(3) *Deconsolidations and group structure changes*—(i) *In general*. Paragraphs (e) and (f) of this section apply with respect to deconsolidations and group structure changes occurring in consolidated return years beginning on or after January 1, 1995.

(ii) *Prior period group structure changes*. If there was a group structure change in a consolidated return year beginning before January 1, 1995, and earnings and profits were not determined under §1.1502–33T(a) as contained in the 26 CFR part 1 edition revised as of April 1, 1994, a distribution in a tax year ending after September 7, 1988, of earnings and profits that are not reflected in the earnings and profits of the distributee member, but would have been so reflected if §1.1502–33T(a) as contained in the 26 CFR part 1 edition revised as of April 1, 1994 had applied, the negative adjustment under paragraph (b) of this section for distributions does not apply (and there is therefore no offset to the increase in the earnings and profits of the distributee).

(4) *Deemed dividend elections*. If there is a deemed distribution and recontribution pursuant to §1.1502–32(f)(2) as contained in the 26 CFR part 1 edition revised as of April 1, 1994 in a consolidated return year beginning before January 1, 1995, the deemed distribution and recontribution under the election are treated as an actual distribution by S and recontribution by P as provided under the election.

(5) *Prior law*. For prior determinations, see prior regulations under section 1502 as in effect with respect to the determination. See, e.g., §§1.1502–33 and 1.1502–33T as contained in the 26 CFR part 1 edition revised as of April 1, 1994.

[T.D. 8560, 59 FR 41695, Aug. 15, 1994, as amended by T.D. 8597, 60 FR 36710, July 18, 1995]

§1.1502–34 Special aggregate stock ownership rules.

For purposes of §§1.1502–1 through 1.1502–80, in determining the stock ownership of a member of a group in another corporation (the ''issuing corporation'') for purposes of determining the application of section 165(g)(3)(A), 332(b)(1), 333(b), 351(a), or 904(f), in a consolidated return year, there shall be included stock owned by all other members of the group in the issuing corporation. Thus, assume that members A, B, and C each own 33⅓ percent of the stock issued by D. In such case, A, B, and C shall each be treated as meeting the 80-percent stock ownership requirement for purposes of section 332, and no member can elect to have section 333 apply. Furthermore, the special rule for minority shareholders in section 337(d) cannot apply with respect to amounts received by A, B, or C in liquidation of D.

[T.D. 6894, 31 FR 11794, Sept. 8, 1966

SPECIAL TAXES AND TAXPAYERS

§1.1502–42 Mutual savings banks, etc.

(a) *In general*. This section applies to mutual savings banks and other institutions described in section 593(a).

(b) *Total deposits*. In computing for purposes of section 593(b)(1)(B)(ii) total deposits or withdrawable accounts at

the close of the taxable year, the total deposits or withdrawable accounts of other members shall be excluded.

(c) *Taxable income; taxable years for which the due date (without extensions) for filing returns is before March 15, 1983.* For taxable years for which the due date (without extensions) for filing returns is before March 15, 1983, a member's taxable income for purposes of section 593(b)(2) is determined under §1.1502–27(b) (computed without regard to any deduction under section 593(b)(2)). In addition, for taxable years beginning after July 11, 1969, taxable income as computed under the preceding sentence is subject to the adjustments provided in section 593(b)(2)(E). See §1.593–6A(b)(5).

(d) *Taxable income; taxable years for which the due date (without extensions) for filing returns is after March 14, 1983*—(1) *In general.* For a taxable year for which the due date (without extensions) for filing returns is after March 14, 1983, a thrift's taxable income for purposes of section 593(b)(2) is its tentative taxable income (as defined in paragraph (e)(1) of this section).

(2) *Definitions.* For purposes of this section:

(i) A *thrift* is a member described in section 593(a).

(ii) A *nonthrift* is a member that is not a thrift.

(e) *Tentative taxable income (or loss)*—(1) *Thrift.* For purposes of this section, a thrift's tentative taxable income (or loss) is its separate taxable income (determined under §1.1502–12 without paragraph (q) thereof and without any deduction under section 593(b)), subject to the following adjustments in the following order:

(i) The adjustments described in paragraph (e)(3) of this section;

(ii) The adjustments described in section 593(b)(2)(E) for those thrifts with separate taxable income greater than zero (determined after the adjustments under paragraph (e)(3) of this section); and

(iii) The adjustments described in paragraph (f) of this section.

(2) *Nonthrift.* For purposes of this section, a nonthrift's tentative taxable income (or loss) is its separate taxable income (determined under §1.1502–12), adjusted for the portion of the consolidated net operating loss deduction attributable to the member, the portion of the consolidated net capital loss carryover or carryback attributable to the member, and further adjusted as described in paragraph (e)(3) of this section.

(3) *Adjustments for all members.* For each member, the following adjustments taken into account in the computation of consolidated taxable income are included in determining its tentative taxable income (or loss) in order to adjust separate taxable income of the member to take into account certain consolidated items:

(i) The portions of the consolidated charitable contributions deduction and the consolidated dividends received deduction attributable to the member.

(ii) The member's capital gain net income, determined without any net capital loss carryover or carryback attributable to the member.

(iii) The member's net capital loss and section 1231 net loss, reduced by the portion of the consolidated net capital loss attributable to the member.

(f) *Adjustments for thrifts*—(1) *Reductions.* A thrift's separate taxable income (as adjusted under paragraph (e)(3) of this section) is reduced (but not below zero) by losses of thrifts and to the extent attributable to functionally related activities, losses of a nonthrift. Certain operating rules for determining the amount of the reductions are provided in paragraph (f)(4) of this section. The reductions are made in the following amounts in the following order:

(i) The thrift's allocable share (as determined under paragraph (h)(2) of this section) of another thrift's tentative taxable loss. That tentative taxable loss is determined by including a deduction under section 593(b) (other than paragraph (2) thereof) for the year in which the loss arises.

(ii) The thrift's allocable share (as determined under paragraph (h)(3) of this section) of the portion of the consolidated net operating loss deduction attributable to it or another thrift. That consolidated net operating loss deduction is determined by including a deduction under section 593(b) (other than paragraph (2) thereof) for the year in which the loss arose. The portion of

a consolidated net operating loss deduction attributable to another thrift is computed by excluding losses arising in taxable years for which the due date (without extensions) for filing returns is before March 15, 1983.

(iii) The thrift's allocable share (as determined under paragraph (h)(4) of this section) of the loss attributable to functionally related activities of a nonthrift (as determined under paragraph (g) of this section). For a rule netting that share against certain income attributable to functionally related activities of that nonthrift, see paragraph (f)(4)(iv) of this section.

(iv) The thrift's allocable share (as determined under paragraph (h)(3) of this section) of the portion of the consolidated net operating loss deduction attributable to functionally related activities of a nonthrift (as determined under paragraph (h)(5) of this section). That consolidated net operating loss deduction is determined by excluding losses arising in taxable years for which the due date (without extensions) for filing returns is before March 15, 1983. For a rule netting that share against certain income attributable to functionally related activities of that nonthrift, see paragraph (f)(4)(iv) of this section.

(2) *Increases*. (i) A thrift's separate taxable income (as adjusted under paragraphs (e)(3) and (f)(1) of this section) is increased in a subsequent consolidated return year to restore reductions made in a prior consolidated return year to a thrift's separate taxable income by reason of losses of a nonthrift. This increase is the amount of the thrift's allocable share (as determined under paragraph (h)(6) of this section) of the income attributable to functionally related activities of a nonthrift in a consolidated return year and is made only in that year. This increase is made only if both the thrift and the nonthrift were members of the group in the consolidated return years in which both the reduction and increase are made.

(ii) This subdivision (ii) limits the increases to a thrift's separate taxable income to assure that income of a particular nonthrift is used to restore reductions of a thrift only to the extent that such nonthrift's losses reduced the thrift's income. Therefore, as of the end of a consolidated return year, the cumulative increases to a thrift's tentative taxable income (by reason of income attributable to functionally related activities of a nonthrift) may not exceed the cumulative reductions to the thrift's separate taxable income made (by reason of the nonthrift's functionally related activities) under paragraph (f)(1) (iii) and (iv) of this section in the current and all prior consolidated return years during which both the thrift institution and the nonthrift institution were members of the group.

(iii) For a netting rule, see paragraph (f)(4)(iv) of this section.

(3) *Special Rule*. (i) If a carryback to a thrift's separate taxable income diminishes the reduction to a thrift's separate taxable income for a prior consolidated return year otherwise required by paragraph (f)(1) (iii) or (iv) of this section, then any increases to a thrift's separate taxable income under paragraph (f)(2) of this section for an intervening consolidated return year must be recomputed to take into account the effect of such carryback. Thus, if a net operating loss attributable to a thrift is carried back and completely offsets the thrift's separate taxable income (before the reductions under paragraph (f)(1) (iii) or (iv) or this section), any increase to the thrift's separate taxable income under paragraph (f)(2) of this section (attributable to a reduction in the year to which the loss is carried) for an intervening consolidated return year will be eliminated. The recomputation required by this subparagraph (3) must be reflected on an amended return for the intervening consolidated return year for which the increase was previously reported. See example (2) in paragraph (j) of this section.

(ii) If a deficiency for an intervening consolidated return year results from the application of paragraph (f)(3)(i) of this section with respect to an item to which section 6501(h) applies, the deficiency may be assessed at any time within the period described in section 6501(h).

(iii) For purposes of chapter 67 of the Code (relating to interest), the last date prescribed for payment of any tax

owed as a result of the application of paragraph (f)(3)(i) of this section is deemed to be the last day of the taxable year for which the item carried back arose.

(4) *Operating rules.* For purposes of paragraphs (d) through (j) of this section:

(i) The portion of a consolidated net operating loss deduction attributable to a member is determined as follows:

(A) First, determine under §§1.1502–21(b) (or §1.1502–79A(a)(3), as appropriate) the portion of each consolidated net operating loss attributable to the member for the particular year in which the loss arose.

(B) Second, apply the anti-double-counting rule in paragraph (h)(3)(iii) of this section so as not to take the same loss into account twice.

(C) Finally, apply the loss absorption limit in paragraph (f)(4)(iii) of this section to the total amount of the consolidated net operating loss deduction from a particular loss year.

(ii) Capital loss carryovers and carrybacks shall be taken into account in a manner consistent with the principles of paragraphs (d) through (j) of this section.

(iii) This subdivision (iii) prescribes a loss absorption limit. The total amount of the consolidated net operating loss deduction from a given year (loss year) taken into account as reductions under paragraph (f)(1) of this section for another year (absorption year) shall not exceed the amount of the consolidated net operating loss deduction attributable to the loss year absorbed in computing consolidated taxable income for the absorption year. For this purpose, consolidated taxable income for the absorption year shall include a deduction under section 593(b) (other than paragraph (2) thereof) for each thrift member.

(iv) This subdivision (iv) prescribes a rule for netting in certain cases income attributable to functionally related activities of a nonthrift in a consolidated return year (''income year'') against losses attributable to functionally related activities of that nonthrift which arise in a consolidated return year (''loss year''). That nonthrift's income is netted against the portion of that nonthrift's loss which would otherwise be applied in a consolidated return year (''reduction year'') under paragraph (f)(1) (iii) or (iv) of this section to reduce a thrift's tentative taxable income, but:

(A) Only if the income year is not later than the loss year and the reduction year, and

(B) Only to the extent the income had not previously been taken into account under paragraph (f)(2) of this section or this subdivision (iv) as of the close of the later of the loss year and the reduction year.

(g) *Income (or loss) attributable to functionally related activities of a nonthrift*—(1) *In general.* For purposes of this section, the income (or loss) attributable to functionally related activities of a nonthrift is the income (or loss) of the nonthrift:

(i) Attributable to the provision of assets or the rendition of services to a thrift (such as the leasing of office space or providing computer or financial services), or

(ii) Derived from the assets described in section 7701(a)(19)(C) (iii) through (x), but only if such assets comprise 5 percent or more of the gross assets of the nonthrift.

(2) *Amount of income (or loss).*The amount of income (or loss) from such activities is the excess of (i) gross income from such activities over (ii) the deductions of the nonthrift allocable and apportionable to that gross income under the principles of §1.861–8. The loss attributable to functionally related activities of a nonthrift is the excess (if any) of such deductions over such gross income. That loss, however, may not exceed the amount of the tentative taxable loss of that nonthrift (determined by excluding losses arising in taxable years for which the due date (without extensions) for filing returns is before March 15, 1983).

(h) *Allocation of income and losses*—(1) *In general.* Paragraphs (h)(2) through (5) of this section provides rules for allocating different losses among thrifts that have tentative taxable income greater than zero. Generally, these allocations are made in the order listed in paragraph (f)(1) of this section and are based upon the relative tentative taxable income of the thrifts to which the particular loss is allocated. For

purposes of each allocation under a subdivision of such paragraph (f)(1), the tentative taxable income of the thrifts used in making this allocation is reduced by the thrift's allocable share of losses allocated to the thrift under a prior subdivision of such paragraph (f)(1). Accordingly, for purposes of this paragraph (h), tentative taxable income is determined without regard to paragraph (f) of this section, except as otherwise provided. Paragraph (h)(6) of this section provides rules for allocating income attributable to functionally related activities of a nonthrift based upon the relative reductions to thrift income made on account of that nonthrift.

(2) *Allocation of tentative taxable loss of other thrifts.* For purposes of paragraph (f)(1)(i) of this section, a thrift's allocable share of another thrift's tentative taxable loss is the loss multiplied by a fraction. The numerator of the fraction is the tentative taxable income (if greater than zero) of the thrift, and the denominator is the aggregate of such tentative taxable income of each thrift.

(3) *Allocation of portions of a consolidated net operating loss deduction.* (i) For purposes of paragraph (f)(1)(ii) of this section, a first thrift's allocable share of the portion of the consolidated net operating loss deduction attributable to another thrift is determined under paragraph (h)(2) of this section as if that portion were a tentative taxable loss of that other thrift and by computing tentative taxable income under such paragraph (h)(2) by taking into account paragraph (f)(1)(i) of this section. A thrift's allocable share of the portion of the consolidated net operating loss deduction attributable to that thrift is equal to that entire portion.

(ii) For purposes of paragraph (f)(1)(iv) of this section, a thrift's allocable share of the portion of a consolidated net operating loss deduction attributable to functionally related activities of a nonthrift (determined under paragraph (h)(5) of this section) is determined under paragraph (h)(4) of this section as if that portion were a loss attributable to functionally related activities of the nonthrift and by computing tentative taxable income under such paragraph (h)(4) by taking into account paragraph (f)(1) (i), (ii), and (iii) of this section.

(iii) This subdivision (iii) prevents the ''double-counting'' of losses. The reduction to the tentative taxable income of a thrift is diminished to the extent the loss that gave rise to the reduction has previously been taken into account in reducing a thrift's tentative taxable income. Thus, any loss taken into account as a reduction to a thrift's separate taxable income under any subdivision of paragraph (f)(1) of this section shall be reduced (but not below zero) to the extent taken into account:

(A) In a prior consolidated return year under any subdivision of such paragraph (f)(1) or

(B) In the current consolidated return year under a previous subdivision of such paragraph (f)(1).

(4) *Allocation of loss attributable to functionally related activities of a nonthrift.* For purposes of paragraph (f)(1)(iii) of this section, a thrift's allocable share of a loss attributable to functionally related activities of a nonthrift is determined by multiplying the loss by a fraction. The numerator of the fraction is the tentative taxable income (if greater than zero) of the thrift (taking into account paragraph (f)(1) (i) and (ii) of this section) and the denominator is the aggregate of such tentative taxable income (so determined) of each thrift.

(5) *Portion of the consolidated net operating loss deduction attributable to functionally related activities of a particular nonthrift.* The portion of the consolidated net operating loss deduction attributable to functionally related activities of a particular nonthrift is the lesser of the following two amounts:

(i) The portion of the consolidated net operating loss deduction attributable to that nonthrift.

(ii) The aggregate of the losses attributable to functionally related activities of that nonthrift for the taxable years in which the consolidated net operating loss deduction arose.

(6) *Allocation of income attributable to functionally related activities of a nonthrift.* For purposes of paragraph (f)(2)

of this section, a thrift institution's allocable share of the income attributable to functionally related activities of a nonthrift is determined by multiplying that income by a fraction. The numerator of the fraction is the amount of the cumulative reductions referred to in paragraph (f)(2)(ii) of this section (minus the cumulative increases under paragraph (f)(2) of this section) made on account of that nonthrift for the thrift and the denominator is the sum of such cumulative reductions (minus such cumulative increases) made on account of that nonthrift for all thrifts.

(7) *Proper accounting* The provisions of section 482 apply in determining a thrift institution's tentative taxable income, and in determining the gross income and deductions attributable to functionally related activities. For example, an expense such as the salary of an individual who performs services for both a thrift and a nonthrift must be allocated in a manner that fairly reflects the value of the services rendered to each.

(i) [Reserved]

(j) *Examples*. The provisions of this section may be illustrated by the following examples. In each example the letter ''T'' for a member denotes a thrift and the letters ''NT'' denote a nonthrift. Also, in each example, a thrift loss includes a bad debt deduction under section 593(b) (other than paragraph (2) thereof) for such year and a thrift with income would have such a bad debt deduction of zero.

Example (1). (a) In 1983, corporations T1, T2, NT1, and NT2 are formed. These corporations constitute an affiliated group that files a consolidated return on the basis of a calendar year. For 1983, 1984, and 1985, the tentative taxable income (or loss) of each member (before the application of paragraph (f) of this section) is as follows:

	1983	1984	1985
NT1	$(60)	$(140)	$15
T1	1,000	500	750
NT2	(90)	(220)	150
T2	(300)	400	250

In 1983, NT1, in addition to its other business activities, acted as a collection agency for T1. Deductions attributable to those activities exceeded gross income attributable to those activities by $70. NT1's other activities generated a $10 gain. In 1984 and 1985, NT1 acted as a collection agency for T1 as its sole activity.

(b) The tentative taxable incomes of T1 and T2 for 1983 (determined under paragraph (e) of this section) as of the close of that year are adjusted by paragraph (f) of this section as follows:

(i) T1's tentative taxable income:		
T1's tentative taxable income (before the application of paragraph (f) of this section		$1,000
Less:		
T2's tentative taxable loss	$300	
NT1's functionally related loss (limited by NT1's overall loss)	60	360
T1's tentative taxable income for 1983		640

(ii) T2's tentative taxable income for 1983 is zero.

(c) The tentative taxable incomes of T1 and T2 for 1984 (determined under paragraph (e) of this section as of the close of that year) are adjusted by paragraph (f) of this section as follows:

(i) T1's tentative taxable income:

T1's tentative taxable income (before the application of paragraph (f) of this section)	$500
Less:	
T1's allocable portion of NT1's functionally related loss (140x500/(500+400))	78
T1's tentative taxable income for 1984	422

(ii) T2's tentative taxable income:	
T2's tentative taxable income (before the application of paragraph (f) of this section	400
Less:	
T2's allocable portion of NT1's functionally related loss (140x400/(500+400))	62
T2's tentative taxable income for 1984	338

(d) For 1985, the amount under paragraph (f) (2) of this section for both T1 and T2 is $15 (NT1's tentative taxable income from functionally related activities for 1985). For 1983 and 1984, T1's tentative taxable income was reduced by a total of $138 (*i.e.*, $60 + $78) due to NT1's losses from functionally related activities. For 1984, T2's tentative taxable income was reduced by $62 due to those losses. Accordingly, under paragraph (f)(2) of this section, T1's tentative taxable income for 1983 is increased by $10 (*i.e.*, $15x$138/($138+$62)) and T2's tentative taxable income is increased by $5 (*i.e.*, $15x$62/($138+$62)).

Example (2). (a) In 1983, corporations T, NT1, and NT2 are formed. these corporations constitute an affiliated group. NT2 provides computer services to T as its sole activity. For the calendar years 1983, 1984, and 1985, the group files a consolidated return. The tentative taxable income of each member (before the application of paragraph (f) of this section) is as follows:

	1983	1984	1985
T	$100	$0	$(200)
NT1	200	0	100

	1983	1984	1985
NT2	(20)	20	0

(b) Under paragraph (f)(1) of this section, T's tentative taxable income for 1983 (determined at the close of that year) is reduced to $80 (*i.e.*, $100 less NT2's $20 loss). For 1984, under paragraph (f)(2) of this section, T's tentative taxable income is increased by $20. For 1985, the consolidated net operating loss of $100 (all of which is attributable to T) is carried back to 1983. That $100 carryback is not limited by paragraph (f)(4)(iii) of this section, since consolidated taxable income for 1983 available for absorption after a bad debt deduction of $0 under section 593(b) (other than paragraph (2) thereof) for that year is $280. Accordingly, under paragraph (f)(1)(ii) of this section, T's tentative taxable income is reduced by the full $100, which is taken into account before the previous reduction of T's tentative taxable income under paragraph (f)(1)(iii) of this section. In addition, under paragraph (f)(3)(i) of this section, the group must file an amended return for 1984 to eliminate the increase to T's bad debt deduction for 1984 by reason of the consolidated net operating loss carryback to 1983.

Example (3) . (a) T and NT are formed in 1983 and are the only members of an affiliated group filing a consolidated return on a calendar year basis. NT provided computer services to T as its sole activity. For 1983, 1984, and 1985, the tentative taxable income of T and NT (before the application of paragraph (f) of this section) is as follows:

	1983	1984	1985
T	$100	$0	$0
NT	0	40	(40)

(b) At the close of 1983, T's tentative taxable income is $100. For 1985, however, the group has a consolidated net operating loss of $40, all of which is attributable to NT's functionally related activities and which is carried back to 1983. However, T's tentative taxable income for 1983 is not reduced under paragraph (f)(1)(iv) of this section, since, under paragraph (f)(4)(iv) of this section, NT's 1984 income attributable to functionally related activities of $40 is netted against that $40 carryback.

Example (4). (a) In 1983, corporations T1, T2, NT1, and NT2 are formed. For calendar years 1983, 1984, and 1985, the affiliated group consisting of T1, T2, NT1, and NT2 filed a consolidated return. NT1 provided computer services to T1 as its sole activity. The tentative taxable income of each member (before the application of paragraph (f) of this section) is as follows:

	1983	1984	1985
T1	(50)	100	30
T2	(50)	(80)	(25)
NT1	(50)	(40)	(99)
NT2	120	30	100

(b) For 1983, the group has a consolidated net operating loss of $30, apportioned $10 each to T1, T2, and NT1 under §1.1502–79A(a)(3). For 1984, the only thrift with tentative taxable income greater than zero (before applying paragraph (f) of this section) is T1. That tentative taxable income of $100 is first reduced to $20 by T2's $80 1984 loss under paragraph (f)(1)(i) of this section. Next, T1's remaining tentative taxable income of $20 is reduced to $10 by the portions attributable to T1 and T2 of the 1983 consolidated net operating loss carryover to 1984 under paragraph (f)(1)(ii) of this section. The sum of those portions is limited to $10 (*i.e.*, $5 each) by paragraph (f)(4)(iii) of this section because 1984 consolidated taxable income available for absorption after a bad debt deduction under section 593(b) (other than paragraph (2) thereof) for each thrift member for that year is $10. For that reason, paragraph (f)(4)(iii) of this section also prevents any further portion of that carryover from being taken into account in 1984 as a reduction under paragraph (f)(1) of this section. T1's remaining tentative taxable income of $10 is reduced to zero, under paragraph (f)(1)(iii) of this section, by NT1's 1984 tentative taxable loss.

(c) For 1985, the only thrift with tentative taxable income greater than zero (before applying paragraph (f) of this section) is T1. T1's tentative taxable income for 1985 of $30 is reduced to $5 by T2's 1985 loss of $25 under paragraph (f)(1)(i) of this section. Next, the portions attributable to T1 and T2 of the consolidated net operating loss carryover from 1983 to 1985 for purposes of paragraph (f)(1)(ii) of this section must be determined. That determination is made without applying the rules for loss absorption in computing consolidated taxable income under §1.1502–21A(b)(3). Those portions are instead determined in 3 steps under paragraph (f)(4)(i) of this section. The first of those steps is to determine each of T1's and T2's attributable portions of the 1983 consolidated net operating loss which under §1.1502–79A (a)(3) is $10 or $20 for both thrifts. The second of those steps is to apply the anti-double counting rule under paragraph (h)(3)(iii) of this section to reduce that $20 amount by the $10 total of the two $5 portions attributable to T1 and T2 of the consolidated net operating loss carryover from 1983 to 1984 taken into account as reductions to T1's tentative taxable income for 1984 under paragraph (f)(1)(ii) of this section. That leaves a $10

total amount available to be taken into account as reductions to T1's remaining tentative taxable income of $5 for 1985 under paragraph (f)(1)(ii) of this section. Under the third of those steps that $10 amount, however, is limited, under the loss absorption limit of paragraph (f)(4)(iii) of this section, to the $6 of the 1983 consolidated net operating loss carryover to 1985 which is absorbed in computing consolidated taxable income for 1985 since 1985 consolidated taxable income available for absorption after a bad debt deduction under section 593(b) (other than paragraph (2) thereof) for that year is $6 (*i.e.*, $30+$100 − $99 − $25). Because separate taxable income cannot be reduced below zero under paragraph (f)(1) of this section, T1's remaining tentative taxable income of $5 is thus reduced to zero by the portions attributable to T1 and T2, respectively, of the consolidated net operating loss carryover from 1983 to 1985 under paragraph (f)(1)(ii) of this section.

(Sec. 1502, 7805, Internal Revenue Code of 1954 (68A Stat. 367 and 917; (26 U.S.C. 1502 and 7805))

[T.D. 7637, 44 FR 46841, Aug. 9, 1979, as amended by T.D. 7815, 47 FR 11516, Mar. 17, 1982; T.D. 7876, 48 FR 11258, Mar. 17, 1983; 48 FR 13165, Mar. 30, 1983; T.D. 8677, 61 FR 33324, June 27, 1996; T.D. 8823, 64 FR 36100, July 2, 1999]

§ 1.1502–43 Consolidated accumulated earnings tax.

(a) *Group subject to tax*—(1) *General rule*. For a group filing a consolidated return for the taxable year, the accumulated earnings tax under section 531 is imposed on consolidated accumulated taxable income (as defined in paragraph (b) of this section). This tax applies to any group that is formed or availed of to avoid or prevent the imposition of the individual income tax on the shareholders of either any of its members or any other corporation by permitting earnings and profits to accumulate instead of dividing or distributing them. Section 531 and this section do not apply to a group that is treated as a ''personal holding company'' under section 542(a)(1) as a result of the application of section 542(b)(1). Special rules are provided in this section for other groups which include one or more personal holding companies.

(2) *Evidence of purpose to avoid income tax*. (i) Under section 533(a), the fact that the group's earnings and profits are permitted to accumulate beyond the reasonable needs of its business is determinative of the purpose to avoid the income tax with respect to shareholders, unless the group by the preponderance of the evidence proves to the contrary.

(ii) The fact that a group is a mere holding or investment group is prima facie evidence of the group's purpose to avoid the income tax with respect to the shareholders. The activities of a member which is a personal holding company are not taken into account in determining if the group is a mere holding or investment group.

(3) *Earnings and profits*. For purposes of this paragraph (a) and paragraph (d) of this section, the following rules apply:

(i) If no member of the group is a personal holding company, the group's earnings and profits are the aggregate of the earnings and profits (or deficit) of each corporation that is a member at the close of the taxable year, determined in accordance with § 1.1502–33.

(ii) Earnings and profits resulting from the application of § 1.1502–33(b) are not taken into account.

(iii) Earnings and profits resulting from the disposition of a member's stock are determined without regard to the stock basis adjustments under §§ 1.1502–32 and 1.1502–33(c)(1).

(4) *Reasonable needs of the business*. The reasonable needs of the group's business include the reasonable needs of the business of any corporation (other than a personal holding company) that is a member at the close of the taxable year. Thus, the earnings and profits of one member may be accumulated with respect to the reasonable business needs of another member. If under § 1.537–3(b) the business of a nonmember corporation is considered the business of a member, then the earnings and profits of any member may be accumulated with respect to such nonmember's reasonable business needs.

(5) *Burden of proof*. The notification described in section 534(b) and the statement described in section 534(c) are made to or by the common parent corporation in accordance with § 1.1502–77.

(b) *Consolidated accumulated taxable income*—(1) *In general.* ''Consolidated accumulated taxable income'' is the group's consolidated taxable income determined under § 1.1502–11 adjusted in the manner provided in paragraph (b)(2) of this section, minus the sum of—

(i) The consolidated dividends paid deduction determined under paragraph (c) of this section and

(ii) The consolidated accumulated earnings credit determined under paragraph (d) of this section.

(2) *Adjustments to consolidated taxable income.* For purposes of paragraph (b)(1) of this section, consolidated taxable income is adjusted as follows:

(i) Under section 535(b)(1), the deduction for taxes is the excess of—

(A) The consolidated liability for tax determined without § 1.1502–2 (b) through (d) and without the foreign tax credit provided by section 33, over

(B) The consolidated foreign tax credit determined pursuant to § 1.1502–4. Foreign taxes deductible under § 1.535–2(a)(2) are also allowed as a deduction under section 535(b)(1).

(ii) The consolidated charitable contributions deduction under § 1.1502–24 does not apply. Under section 535(b)(2), there shall be allowed the aggregate charitable contributions of the members allowable under section 170, determined without section 170 (b)(2) and (d)(2).

(iii) Under section 535(b)(3), the deductions provided in §§ 1.1502–26 and 1.1502–27 are not allowed.

(iv) Under section 535(b)(4), the consolidated net operating loss deduction described in §§ 1.1502–21(a) or 1.1502–21A(a), as appropriate is not allowed.

(v) Under section 535(b)(5), there is allowed as a deduction the consolidated net capital loss, determined under §§ 1.1502–22(a) or 1.1502–22A(a), as appropriate .

(vi) Under section 535(b)(6), there is allowed as a deduction an amount equal to (A) the excess of the consolidated net long-term capital gain (determined under §§ 1.1502–22(a) or 1.1502–41A, as appropriate over the consolidated net short-term capital loss (determined under §§ 1.1502–22T(a) or 1.1502–41A, as appropriate), minus (B) the taxes attributable to this excess. This consolidated net short-term capital loss is determined without the consolidated net capital loss carryovers or carrybacks to the taxable year.

(vii) Under section 535(b)(7), the consolidated net capital loss carryovers and carrybacks are not allowed. See §§ 1.1502–22(b) or 1.1502–22A(b), as appropriate.

(viii) Sections 1.1502–15A (Limitations on built-in deductions not subject to § 1.1502–15) and 1.1502–15 do not apply.

(3) *Personal holding company a member.* If a member is a personal holding company for the taxable year—

(i) [Reserved]

(ii) In applying paragraph (b)(2)(i) of this section, consolidated liability for tax (as determined under that paragraph (b)(2)(i)) is reduced by the portion thereof allocable to that member under section 1552(a) (1), (2), (3), or (4) (or § 1.1502–33(d)), whichever is applicable. The consolidated foreign tax credit is computed by excluding the taxable income and any foreign taxes paid or accrued by that member, and foreign taxes deductible under § 1.535–2(a)(2) do not include foreign taxes attributable to that member.

(c) *Consolidated dividends paid deduction*—(1) *General rule.* For purposes of this section, the consolidated dividends paid deduction is the aggregate of the members' deductions under section 561(a) (1) and (2). This deduction is determined by excluding deductions for dividends paid to other members.

(2) *Exception for certain personal holding companies.* [Reserved]

(3) *Dividends paid defined.* For purposes of this paragraph (c), ''dividends paid'' and ''dividend (or portion thereof) paid'' include amounts treated as dividends paid during the taxable year under sections 562(b)(1), 563, and 565 (relating respectively to liquidating distributions, dividends paid after year end, and consent dividends).

(4) *Examples.* This paragraph (c) can be illustrated by the following examples:

Example (1). Corporations P and S constitute an affiliated group which files a consolidated return on a calendar year basis for 1984 and 1985. P owns all of S's stock and two individuals own all of P's stock. Neither member of the group is a personal holding company for 1984. Assume that on December

15, 1984, S pays a dividend (as defined in section 316 (a)) of $2,000 to P, and P pays a dividend (as so defined) of $3,000 on January 15, 1985, to its individual shareholders. All dividends are paid in cash and are pro rata with no preference as to any shares or class of stock. For purposes of this paragraph (c), the consolidated dividends paid deduction for 1984 is $3,000, *i.e.*, the dividend paid on January 15, 1985, by P to its nonmember shareholders. See section 563 (a). The $2,000 dividend paid by S to P is not taken into account in computing the consolidated dividends paid deduction.

Example (2) [Reserved]

(d) *Consolidated accumulated earnings credit*. [Reserved]

[T.D. 7937, 49 FR 3462, Jan. 27, 1984, as amended by T.D. 8560, 59 FR 41674, Aug. 15, 1994; T.D. 8677, 61 FR 33324, June 27, 1996; T.D. 8560, 62 FR 12098, Mar. 14, 1997; T.D. 8823, 64 FR 36100, July 2, 1999]

§ 1.1502–44 Percentage depletion for independent producers and royalty owners.

(a) *In general*. The sum of the percentage depletion deductions for the taxable year for all oil or gas property owned by all members, plus any carryovers under section 613A(d)(1) or paragraph (d) of this section from a prior taxable year, may not exceed 65 percent of the group's adjusted consolidated taxable income (under paragraph (b) of this section) for the consolidated return year.

(b) *Adjusted consolidated taxable income*. For purposes of this section, adjusted consolidated taxable income is an amount (not less than zero) equal to the group's consolidated taxable income determined without:

(1) Any depletion with respect to an oil or gas property (other than a gas property with respect to which the depletion allowance for all production is determined pursuant to section 613A(b)) for which percentage depletion would exceed cost depletion in the absence of the depletable quantity limitations contained in section 613A(c) (1) and (6) and the consolidated taxable income limitation contained in paragraph (a) of this section.

(2) Any consolidated net operating loss carryback to the consolidated return year under §§ 1.1502–21 or 1.1502-21A (as appropriate) and

(3) Any consolidated net capital loss carryback to the consolidated return year under §§ 1.1502–22 or 1.1502-22A (as appropriate).

(c) *Allocation to oil and gas properties*. The maximum amount allowable as a deduction under section 613A(c), after the application of paragraph (a) of this section, is allocated to properties held by members in accordance with the regulations under section 613A(d). Those regulations provide for an initial allocation and possible reallocation of the maximum allowable percentage depletion deduction among oil and gas properties. Thus, if, after the initial allocation, cost depletion exceeds the percentage depletion that would be allowable for a particular oil or gas property, cost depletion must be used for that property and the maximum amount of percentage depletion allowable as a deduction for the group is reallocated among only the remaining properties held by all members.

(d) *Carryover for disallowed amounts*. (1) If any amount is disallowed as a deduction for the taxable year by reason of section 613A(d)(1) or paragraph (a) of this section, the disallowed amount for each oil or gas property is treated as an amount allowed as a deduction under section 613A(c), for the following taxable year for the member that owned the property, in accordance with the regulations under section 613A and paragraphs (a) and (d)(2) of this section.

(2) Any amount that was disallowed as a deduction in a separate return limitation year of a member may be carried to a consolidated return year only to the extent that 65 percent of the excess determined under paragraph (d)(3) of this section exceeds the sum of the otherwise allowable percentage depletion deductions for the member's oil and gas properties for the year.

(3) The excess determined in this subparagraph (3) for a member is the excess, if any, of adjusted consolidated taxable income for the year under paragraph (b) of this section over that income recomputed by excluding the items of income and deductions of the member.

(e) *Effective date*. This section applies to taxable years for which the due date

(without extensions) for filing returns is after September 30, 1980.

[T.D. 7725, 45 FR 65561, Oct. 3, 1980, as amended by T.D. 8677, 61 FR 33324, June 27, 1996; T.D. 8823, 64 FR 36100, July 2, 1999]

§ 1.1502–47 Consolidated returns by life- nonlife groups.

(a) *Scope*—(1) *In general*. Under section 1504(b)(2), insurance companies that are taxed under section 802 or 821 (relating respectively to life insurance companies and to certain mutual insurance companies) are not treated as includible corporations for purposes of determining under section 1504(a) the existence of an affiliated group and the composition of its membership. Section 1504(c)(2) provides an election whereby certain life insurance companies and mutual insurance companies may be treated as includible corporations, and thus members, of a group composed of other includible corporations. This section provides regulations for the making of this election and for the determination of an electing group's composition and its consolidated tax liability.

(2) *General method of consolidation*—(i) *Subgroup method*. The regulations adopt a subgroup method to determine consolidated taxable income. One subgroup is the group's nonlife companies (including those taxable under section 821). The other subgroup is the group's life insurance companies. Initially, the nonlife subgroup computes nonlife consolidated taxable income and the life subgroup computes consolidated partial life insurance company taxable income. A subgroup's income may in effect be reduced by a loss of the other subgroup. The life subgroup losses consist of consolidated loss from operations and life consolidated net capital loss. The nonlife subgroup losses consist of nonlife consolidated net operating loss and nonlife consolidated net capital loss. Consolidated taxable income is therefore defined in pertinent part as the sum of nonlife consolidated taxable income and consolidated partial life insurance company taxable income reduced by life subgroup losses or nonlife subgroup losses.

(ii) *Subgroup loss*. A subgroup loss does not actually affect the computation of nonlife consolidated taxable income or consolidated partial life insurance company taxable income. It merely constitutes a bottom-line adjustment in reaching consolidated taxable income. Furthermore, one subgroup's loss must first be carried back against income of the same subgroup before it may be used as a setoff against the second subgroup income in the taxable year the loss arose. (See section 1503(c)(1)). The carryback of the losses from one subgroup may not be used to offset income of the other subgroup in the year to which the loss is to be carried. This carryback of the first subgroup's loss may ''bump'' the second subgroup's loss that in effect previously reduced the income of the first subgroup. The second subgroup's loss that is bumped in appropriate cases may in effect reduce a succeeding year's income of the second or first subgroup. This approach gives the group the tax savings of the use of losses but the bumping rule assures that insofar as possible life deductions will be matched against life income and nonlife deductions against nonlife income.

(iii) *Carryover of subgroup loss*. A subgroup's loss may be used in a succeeding year, but in any particular succeeding year the loss must be used to reduce the income of the same subgroup before it may be used as a setoff against the other subgroup's income.

(3) *Authority*. This section is prescribed under the authority of sections 1502, 1503(c), 1504(c)(2), and 7805(b).

(4) *Other provisions*. The provisions of §§ 1.1502–1 through 1.1502–80 apply unless this section provides otherwise. Further, unless otherwise indicated in this section, a term used in this section has the same meaning as in sections 801–844.

(b) *Effective date*. This section is effective for taxable years for which the due date (without extensions) for filing returns is after March 14, 1983.

(c) *Cross references*. The following table provides cross references for some of the definitions and operating rules that are relevant in making the election and determining the group's composition and its tax liability:

Item and Paragraph
General definitions (d).

Eligible corporation (Five-year rules) (d)(12).
Election (e).
Consolidated taxable income (g).
Nonlife consolidated taxable income (h).
Consolidated partial life insurance company taxable income (j).
Nonlife subgroup losses (m).
Life subgroup losses (n).
Alternative tax (o).

(d) *Definitions*. For purposes of this section:

(1) *Life insurance company*. The term ''life company'' means a life insurance company as defined in section 801. Section 801 applies to each company separately.

(2) *Mutual insurance company*. The term ''mutual company'' means a mutual insurance company taxable under section 821(a)(1).

(3) *Life insurance company taxable income*. The term ''life insurance company taxable income'' is referred to as LICTI. The terms ''TII'', ''GO'', and ''LO'' refer, respectively, to taxable investment income (section 804), gain from operations (section 809), and loss from operations (section 812). The term ''consolidated partial LICTI'' refers to consolidated LICTI without section 802(b)(3).

(4) *Group*. The term ''group'' means an affiliated group of corporations (as defined in section 1504(a)). Unless otherwise indicated in this section, a group's composition is determined without section 1504(b)(2).

(5) *Member*. The term ''member'' means a corporation (including the common parent) that is an includible corporation in the group. A life company or mutual company is tentatively treated as a member for any taxable year for purposes of determining if it is an eligible corporation under paragraph (d)(12) of this section and therefore if it is an includible corporation under section 1504(c)(2). If such a company is eligible and includible (under section 1504(c)(2)), it will actually be treated as a member of the group.

(6) *Life member*. A life member is a member of the group that is a life company.

(7) *Nonlife member*. A nonlife member is a member of the group that is not a life company.

(8) *Life subgroup*. A life subgroup is composed of those members that are life members. If the group has only one life member, it constitutes a life subgroup.

(9) *Nonlife subgroup*. A nonlife subgroup is composed of those members that are nonlife members. If the group has only one nonlife member, it constitutes a nonlife subgroup.

(10) *Separate return year*. The term ''separate return year'' means a taxable year of a corporation for which it files a separate return or for which it joins in the filing of a consolidated return by another group. For purposes of this subparagraph (10), the term ''group'' is defined with regard to section 1504(b)(2) for years in which an election under section 1504(c)(2) is not in effect. Thus, a separate return year includes a taxable year for which that election is not in effect.

(11) *Separate return limitation year*. Section 1.1502–1(f)(2) provides exceptions to the definition of the term ''separate return limitation year''. For purposes of applying those exceptions to this section, for taxable years ending after December 31, 1980, the term ''group'' is defined without regard to section 1504(b)(2) and the definition in this subparagraph (11) applies separately to the nonlife subgroup in determining nonlife consolidated taxable income under paragraph (h) of this section and to the life subgroup in determining consolidated partial LICTI under paragraph (j) of this section. Paragraph (m)(3)(ix) of this section defines the term ''separate return limitation year'' for purposes of determining whether the losses of one subgroup may be used against the income of the other subgroup.

(12) *Eligible corporations*—(i) *In general*. A corporation is an eligible corporation for a taxable year of a group only if, throughout every day of the base period the corporation:

(A) Was in existence and a member of the group determined without the exclusions in section 1504(b)(2) (see paragraphs (d)(12) (iii) through (vi) of this section),

(B) Was engaged in the active conduct of a trade or business (''active business''),

(C) Did not experience a change in tax character (see paragraph (d)(12)(vii) of this section), and

(D) Did not undergo disproportionate asset acquisitions (see paragraph (d)(12)(viii) of this section).

(ii) *Base period*. The base period consists of the common parent's five taxable years immediately preceding the group's taxable year for which the consolidated return and the determination of eligibility are made. Eligibility is determined for each consolidated return year beginning with the first year for which the election under section 1504(c)(2) is effective.

(iii) *In existence*. Except as provided in paragraphs (d)(12) (v) and (vi) of this section, a corporation organized after the base period begins is not eligible even though it is a member of the group immediately after its organization. For purposes of this subdivision (iii), a corporation that was a party to a reorganization described in section 368(a)(1)(F) shall be treated as the same entity both before and after the reorganization.

(iv) *Membership period*. Except as provided in paragraphs (d)(12) (v) and (vi) of this section, a corporation must have been a member of the group throughout the base period to be eligible. Thus, an ineligible corporation includes one whose stock was acquired from outside the group at any time during the base period or one which was a member of a different group (whether by application of reverse acquistion rules in §1.1502–75(d)(3) or otherwise) at any time during the base period. For purposes of this subdivision (iv), the common parent of a group is treated as constituting a group (and hence is a member) during any period when it was not a member of an affiliated group within the meaning of section 1504(a) (applied without section 1504(b)(2)).

(v) *Tacking rule*. The period during which an ''old'' corporation is in existence and a member of the group engaged in active business is included in (or ''tacks'' onto) the period for the ''new'' corporation if the following five conditions listed in this subdivision (v) are met. For purposes of this subparagraph (12), a ''new'' corporation is a corporation (whether or not newly organized) during the period its eligibility depends upon the tacking rule. The five conditions are as follows:

(A) The first condition is that, at any time, 80 percent or more of the new corporation's assets it acquired (other than in the ordinary course of its trade or business) where acquired from the old corporation in one or more transactions described in section 351(a) or 381(a). This asset test is applied by using the fair market values of assets on the date they were acquired and without regard to liabilities. Assets acquired in the ordinary course of business will be excluded from total assets only if they were acquired after the new corporation became a member of the group (determined without section 1504(b)(2)). In addition, assets that the old corporation acquired from outside the group in transactions not conducted in the ordinary course of its trade or business are not included in the 80 percent (but are included in total assets) if the old corporation acquired those assets within five calendar years before the date of their transfer to the new corporation.

(B) The second condition is that at the end of the taxable year during which the first condition is first met, the old corporation and the new corporation must both have the same tax character. For purposes of this paragraph (d)(12), a corporation's tax character is the section under which it would be taxed (*i.e.*, sections 11, 802, 821, or 831) if it filed a separate return. If the old corporation is not in existence (or adopts a plan of complete liquidation) at the end of that taxable year, this subdivision (v)(B) will apply to the old corporation's taxable year immediately preceding the beginning of the taxable year during which the first condition is first met.

(C) The third condition is that, if the old and new corporation are life insurance companies, the transfer (or transfers) is not reasonably expected (at the time of the transfer) to result in the separation of profitable activities from loss activities.

(D) The fourth condition is that, at the end of the taxable year during which the first condition is first met, the new corporation does not undergo a disproportionate asset acquisition under paragraph (d)(12)(viii) of this section.

(E) The fifth condition is that, if there is more than one old corporation, the first three conditions apply to all of the corporations. Thus, the second condition (tax character) must be met by all of the old corporations transferring assets taken into account in meeting the test in paragraph (d)(12)(v)(A) of this section.

(vi) *Old group remaining in existence.* If the common parent of a group (or a new common parent) became the common parent in a transaction described in §1.1502–75 (d)(2) or (d)(3) where a group remained in existence, then paragraph (d)(12) (ii) through (iv) of this section apply by treating that common parent as if it were also the previous common parent of the group that remains in existence. If this paragraph (d)(12)(vi) applies to a transaction, the tacking rule in paragraph (d)(12)(v) of this section does not apply to the transaction.

(vii) *Change in tax character.* A corporation must not experience during the base period a change in tax character (as defined in paragraph (d)(12)(v)(B) of this section) if the change is attributable to an acquisition of assets from outside the group in transactions not conducted in the ordinary course of its trade or business. However, if a new corporation relies on the tacking rules in paragraph (d)(12)(v) of this section, this paragraph (d)(12)(vii) shall apply during the base period and the current consolidated return year and even if the change in tax character is attributable to an asset acquisition from within the group.

(viii) *Disproportionate asset acquisition.* To be eligible, a corporation must not undergo during the base period disproportionate asset acquisitions which are attributable to an acquisition (or a series of acquisitions) of assets from outside the group in transactions not conducted in the ordinary course of its trade or business (special acquisition). Whether special acquisitions are disproportionate is determined at the end of each base period. Whether an acquisition results in a disproportionate asset acquisition depends on all of the facts and circumstances including the following factors and rules:

(A) One factor is the portion of the insurance reserves (*i.e.*, total reserves in section 801 (c)) of the acquiring company at the end of the base period which is attributable to special acquisitions.

(B) A second factor is the portion of the fair market value of the assets (without reduction for liabilities) of the acquiring company at the end of the base period that is attributable to special acquisitions.

(C) A third factor is the portion of the premiums generated during the last taxable year of the base period which are attributable to special acquisitions.

(D) A corporation will not experience a disproportionate asset acquisition unless 75 percent of one factor (whether or not listed in this subdivision (viii)) is attributable to special acquisitions.

(E) Money or other property contributed to a corporation by a shareholder that is not a member of the group (without section 1504(b)(2)) is not a special acquisition.

(F) If a new corporation relies on the tacking rules in paragraph (d)(12)(v) of this section, this subdivision (viii) applies to that corporation during a consolidated return year. Thus, if at any time during a consolidated return year, a new corporation undergoes a disproportionate asset acquisition, the corporation becomes ineligible at that time.

(13) *Ineligible corporation.* A corporation that is not an eligible corporation is ineligible. If a life company or mutual company is ineligible, it is not treated under section 1504(c)(2) as an includible corporation. Losses of a nonlife member arising in years when it is ineligible may not be used under section 1503(c)(2) and paragraph (m) of this section to set off the income of a life member. If a life or mutual company is ineligible and is the common parent of the group (without section 1504(b)(2)), the election under section 1504(c)(2) may not be made.

(14) *Illustrations.* The following examples illustrate this paragraph (d). In each example, L indicates a life company, another letter indicates a nonlife company, and each corporation uses the calendar year as its taxable year.

Example (1). P has owned all of the stock of S since 1913. On January 1, 1980, P purchased all of the stock of L_1 which owns all of the

stock of L_2 and S_2. L_1 and L_2 are treated as members for purposes of determining if they are eligible for 1982. However, for 1982, L_1, L_2, and S_2 are ineligible because none of them has been a member of the group for P's five taxable years preceding 1982. For 1982, L_1 and L_2 may elect to file a consolidated return because they constitute an affiliated group under section 1504(c)(1), and P and S may file a consolidated return.

Example (2). Since 1974, P has been a mutual insurance company owning all the stock of L_1. In 1980, P transfers assets to S_1., a new stock casualty company subject to taxation under section 831(a). For 1982, only P and L_1 are eligible corporations. The tacking rule in paragraph (d)(12)(v) of this section does not apply in 1982 because the old corporation (P) and the new corporation (S_1) do not have the same tax character. The result would be the same if P were a life company.

Example (3). Since 1974, L has owned all the stock of L_1 which has owned all the stock of S_1, a stock casualty company. L_1 writes some accident and health insurance business. In 1980, L_1 transfers this business, and S_1 transfers some of its business, to a new stock casualty company, S_2., in a transaction described in section 351 (a). The property transferred to S_2. by L_1 had a fair market value of $50 million. The property transferred by S_1 had a fair market value of $40 million. S_2. is ineligible for 1982 because the tacking rule in paragraph (d)(12)(v) of this section does not apply. The old corporations (L_1 and S_1) and the new corporation (S_2.) do not all have the same tax character. See subparagraph (d)(12)(v)(B) and (E) of this section. The result would be the same if L_1 transferred other property (*e.g.*, stock and securities) with the same value, rather than accident and health insurance contracts, to S_2.

Example (4). Since 1974, P has owned all the stock of S and L_1. L_1 is a large life company engaged in active business since 1974. On January 1, 1982, L_1 transfers in a section 351 (a) transaction assets (not acquired from outside the group) to a new life company, L_2. For 1982, L_2 is eligible because under paragraph (d)(12)(v) of this section, L_2 is considered to have been in existence and a member of the group engaged in the active business since 1974 which is the period L_1, the old corporation, was in existence and a member of the group so engaged.

Example (5). The facts are the same as in example (4). Assume that the fair market value of the assets L_1 transferred to L_2 was $10 million on January 1, 1982 and that L_2 acquired no other assets prior to June 30, 1983. Assume further that on January 1, 1983, L_1 acquires (other than in the ordinary course of its trade or business) assets having a fair market value of $40 million from L_3, an unrelated life company. On June 30, 1983, L_1 transfers those assets to L_2. L_2 becomes ineligible on June 30, 1983. Since by fair market values, 80 percent (*i.e.*, 40/50) of L_2's assets are attributable to special acquisitions, L_2 has undergone a disproportionate asset acquisition at that time. See paragraph (d)(12)(viii)(B), (D), and (F) of this section.

Example (6). The facts are the same as in example (5) except that L_1 transfers assets (other than life insurance contracts) having a fair market value of $40 million to L_2 and L_2 purchases the assets of L_3 on June 30, 1983. the result of the 1983 acquisition is the same as in example (5).

Example (7). The facts are the same as in example (5) except the acquired assets acquired by L_2 in 1983 from L_1 have a fair market value of $20 million. In 1983, L_2 had $1 million of premiums on its pre-existing contracts but premiums generated by the acquired business for the entire year would have been $2 million. L_2 is eligible in 1983 because it did not experience a disproportionate asset acquisition on June 30, 1983.

Example (8). Since 1974, L, a State A corporation, has owned all of the stock of L_1 and S_1. On January 1, 1982, L merges into L_3, a smaller State B corporation, which owns the stock of S_2. The transaction is a reverse acquisition described in §1.1502–75(d)(3) and the group of which L was the common parent remains in existence. Under paragraph (d)(12)(vi) of this section, L_3 is eligible for 1982. However, S_2 is ineligible in 1982 under paragraph (d)(12)(iv) of this section.

Example (9). The facts are the same as in example (8) except that L acquires the stock of L_3. L_3 and S_2 are both ineligible for 1982. On January 1, 1983, the fair market value of L_3's assets are $5 million (without liabilities) and on that date L transfers assets (not acquired from outside the group) having a fair market value of $95 million (without liabilities) to L_3. L and L_3 are life companies at the end of 1983. L_3 is eligible in 1983 under the tacking rule in paragraph (d)(12)(v) of this section. S_2 is ineligible in that year. The result would be the same if L_3 was not a life company prior to January 1, 1983. See paragraph (d)(12)(v)(B) of this section.

Example (10). Since 1974, P has owned all of the stock of S_1 and L_1. On January 1, 1982, L_1 incorporates L_2 and transfers cash and securities to L_2. L_2 begins writing a new line of specialty life insurance products and it qualifies as a life company for calendar year 1982. L_2 generates a loss from operations (section 812) attributable to its writing of new business. For 1982, L_2 is ineligible under paragraph (d)(12)(v)(C) of this section.

Example (11). The facts are the same as in example (10) except that L_1 transfers to L_2 a block of insurance contracts that generated losses for L_1 and continued to generate losses for L_2, producing a loss from operations. L_2 is ineligible in 1982 under paragraph (d)(12)(v)(C) of this section.

Example (12). Since 1974, X, a foreign corporation, has owned all the stock of S_2 and

S_1, and S_1 has owned all of the stock of L_1. On January 1, 1982, X incorporates a new U.S. company P, and transfers the stock of S_1 and S_2 to P. Assume that under §1.1502–75(d)(3) (relating to reverse acquisitions), the S_1–L_1 affiliated group remains in existence. Under paragraph (d)(12)(vi) of this section, P, S_1, and L_1 are eligible but S_2 is ineligible. The result would be the same if X were an individual.

Example (13). The facts are the same as in example (12) except that X owns all of the stock of S_1, L_1, and S_2. In addition, on January 1, 1982, X transfers the stock of S_1 and S_2 to L_1. L_1 is eligible in 1982 under paragraph (d)(12)(iv) of this section. L_1 would still be eligible even if it owned a subsidiary during the base period but sold the subsidiary prior to January 1, 1982. S_1 and S_2 are ineligible in 1982.

Example (14). Since 1974, S_1 has owned all of the stock of L_1. S_2, an unrelated company, has owned all of the stock of L_2 and S_3 for 10 years. S_1 and S_2 are active stock casualty companies and not holding companies. On January 1, 1982, S_1 and S_2 merge into a new casualty company, S, in a transaction described in §1.1502–75(d)(3) so that the group of which S_1 was the common parent remains in existence. S and L_1 are eligible in 1982 under paragraph (d)(12)(vi) of this section. L_2 and S_3 are ineligible.

Example (15). The facts are the same as in example (14) except that S_2 (the first corporation in §1.1502–75(d)(3)) acquires the stock of S_1 in exchange for the stock of S_2. The result is that only S_2, S_1, and L_1 are eligible in 1982.

Example (16). Since 1974, S had owned all of the stock of L_1. L_1 is a large life company. On January 1, 1982, L_1 incorporates L_2 and transfers $40 million in cash and securities to L_2 in a transaction described in section 351(a). On March 1, 1982, L_2 purchases the assets of L_3, an unrelated life company. The purchased assets have a fair market value (without liabilities) of $30 million on March 1, 1982. L_2 is ineligible for 1982 because the tacking rule in paragraph (d)(12)(v) of this section does not apply. L_2 experienced a disproportionate asset acquisition in 1982. See paragraph (d)(12)((v)(D) of this section.

(e) *Election*—(1) *In general.* The election under section 1504(c)(2) may not be made if the group's common parent is an ineligible life company or an ineligible mutual company. The election under section 1504(c)(2) may only be made by the common parent of the group (as defined in section 1504(c)(2) without the exclusions in section 1504(b)(2)). For example, assume that P owns all of the stock of L_1, an eligible life company, which owns the stock of S_1. Assume further that P also owns the stock of L_2, an ineligible life member, which (for more than five years) has owned the stock of a nonlife company, S_2. Only P may make the election and, if it does so, P, L_1, and S_1 may file a consolidated return under this section. L_2 may not make the election under section 1504(c)(2) and may not file a consolidated return with S_2.

(2) *How election is made*—(i) *General rule.* The election under section 1504(c)(2) is generally made by the group's common parent in the same manner (and it has the same effect) as the election to file a consolidated return is made under §1.1502–75 (a) and (b) for a group which did not file a consolidated return for the immediately preceding taxable year. The procedure for making the election under section 1504(c)(2) is the same whether or not a consolidated return was filed by the life members or the nonlife members for the immediately preceding taxable year.

(ii) *Special rule.* Notwithstanding the general rule, however, if the nonlife members in the group filed a consolidated return for the immediately preceding taxable year and had executed and filed a Form 1122 that is effective for the preceding year, then such members will be treated as if they filed a Form 1122 when they join in the filing of a consolidated return under section 1504(c)(2) and they will be deemed to consent to the regulations under this section. However, an affiliation schedule (Form 851) must be filed by the group and the life members must execute a Form 1122 in the manner prescribed in §1.1502–75(h)(2).

(3) *Irrevocability.* Except as provided in §1.1502–75(c) and paragraph (e)(4) of this section, the election under section 1504(c)(2) is irrevocable.

(4) *Permission to discontinue*—(i) *General rule.* A ''section 1504(c)(2) group'' with a common parent that has made the election to file a consolidated return under section 1504(c)(2) in a previous taxable year is granted permission to elect (under §1.1502–75(c)(2)(ii)) to discontinue filing such a consolidated return for that group's first taxable year for which the regulations under this section are effective. This

election to discontinue shall be exercised in the time and manner prescribed in §1.1502–75(c)(3), except that the group's common parent shall exercise this election to discontinue (and the other members of the section 1504(c)(2) group must comply with this election) by filing appropriate returns. For purposes of this paragraph (e)(4), an appropriate return is either a separate return or a consolidated return that is filed by newly exercising the privilege under §1.1502–75(a)(1).

(ii) *Types of groups.* (A) A ''section 1504(c)(2) group'' is an affiliated group which files or filed a consolidated return pursuant to an election under section 1504(c)(2).

(B) A ''limited group'' is an affiliated group (determined without section 1504(c)(2)) having at least one member which was a member of a section 1504(c)(2) group on the date that the section 1504(c)(2) group elected to discontinue under paragraph (e)(4)(i) of this section.

(iii) *Effect on restoration rules.* If a group ceases to file a consolidated return or terminates or if a member leaves the group, certain items of income, gain, or loss on transactions between members are taken into account under §§1.1502–13, 1.1502–18, and 1.1502–19 (''restoration rules''). For purposes of applying these restoration rules solely by reason of an election under paragraph (e)(4)(i) or (e)(4)(v)(A) of this section to discontinue filing consolidated returns as a section 1504(c)(2) group, the following rules apply:

(A) The section 1504(c)(2) group shall not be considered to terminate and no member of that group shall be treated as ceasing to be a member.

(B) Members of that section 1504(c)(2) group that are included in the consolidated return of a limited group for the first taxable year for which the discontinuance is effective shall be considered to be filing a consolidated return as a continuation of the section 1504(c)(2) group. However, a corporation that is not a member of a particular limited group for that taxable year is considered to have a separate return year (and, for purposes of §1.1502–19(c), not to be a member of a group filing a consolidated return) with respect to that limited group's members.

(C) Section 1.1502–13 shall be applied without regard to paragraph (f)(1)(vii).

(iv) *Illustrations.* The following examples illustrate paragraph (e)(4)(i)–(iii) of this section. In these examples, L indicates a life company and another letter indicates a nonlife company. All corporations use the calendar year as the taxable year. For all taxable years involved, P owns all the stock of L_1 and of S, L_1 owns all the stock of L_2, L_2 owns all the stock of L_3, and S owns all the stock of L_4. For 1981, P makes the life-nonlife election of section 1504(c)(2) and L_4 is an eligible corporation. For 1982, P makes the election to discontinue filing consolidated returns under section 1504(c)(2) in accordance with the permission granted in this paragraph (e)(4).

Example (1). L_1, L_2, and L_3 were eligible members. For 1982, P and S may either file separate returns or may file, as a limited group, a consolidated return. Similarly, L_1, L_2, and L_3 may either file separate returns or may file a consolidated return as a limited group under section 1504(c)(1). L_4 must file a separate return.

Example (2). For 1981, L_1 was an ineligible member and L_1, L_2, and L_3 filed a consolidated return under section 1504(c)(1). For 1982, L_1, L_2, and L_3 must continue filing a consolidated return under section 1504(c)(1).

Example (3). For 1981, L_1 was an eligible member and L_2 and L_3 were ineligible members. For 1982, L_1, L_2, and L_3 either must each file a separate return or must file a consolidated return as a limited group under section 1504(c)(1) having L_1 as a common parent.

Example (4). The facts are the same as in example (3). Assume further that for 1981, L_2 and L_3 file a consolidated return. During 1981, intercompany transactions (see §1.1502–13) occur in the life-nonlife group between P and L_1, between P and S, and between S and L_4 and occur in the ineligible life subgroup between L_2 and L_3. For 1982, the restoration rules of §1.1502–13, as modified by paragraph (e)(4)(iii)(B) of this section, will be applicable as indicated in the following table:

Intercompany transactions between	§1.1502–13
P and L_1	Yes.
P and S, if they file:	
Separate returns	Yes.
A consolidated return	No.
S and L_4	Yes.
L_2 and L_3, if L_1, L_2, and L_3 file:	
Separate returns	Yes.
A consolidated return	No.

(v) *Additional rules.* (A) If a group with a taxable year ending in the

month of December, 1982, had made the election under section 1504(c)(2) for a taxable year ending prior to December 1, 1982, and if that group meets the conditions of subdivision (vi) of this paragraph (e)(4), then the common parent may elect to discontinue filing a consolidated return for its taxable year ending in the month of December, 1982 (and other members of the section 1504(c)(2) group must comply with this election) by filing appropriate returns (see paragraph (e)(4)(i) of this section) before September 16, 1983.

(B) If a group made the election under section 1504(c)(2) for its taxable year ending in the month of December, 1982, and if that group meets the conditions of subdivision (vi) of this paragraph (e)(4), then the common parent may elect to withdraw the section 1504(c)(2) election (and all other members of the group determined without section 1504(b)(2) comply with the election) by filing before September 16, 1983, any returns for the appropriate taxable years that would have been filed had the section 1504(c)(2) election never been made.

(vi) A group referred to at subdivision (v)(A) or (B) of this (e)(4) meets the conditions of this subdivision (vi) if it—

(A) filed before March 16, 1983, a return for its taxable year ending in the month of December, 1982, and

(B) had not been granted an extension of time beyond March 15, 1983, for the filing of that return.

(vii) *Interest*. For purposes of section 6601(a), interest runs from the original due date (without extensions) for the filing of such returns as are filed pursuant to an election (to discontinue or withdraw as the case may be) under this paragraph (e)(4).

(5) *Consent to regulations*. If a group does not discontinue filing a consolidated return under paragraph (e)(4) of this section but continues to file a consolidated return for the group's first taxable year for which the regulations under this section are first effective, the members of the group will be deemed to have consented to the regulations under this section.

(6) *Cross reference*. If an election is made under section 1504(c)(2), see § 1.1502–75 (e) and (f) for rules that apply for not including (or including) a member or a nonmember in the consolidated return.

(f) *Effect of election*. If the common parent makes the election under section 1504(c)(2), the following rules apply:

(1) *Termination of group*. A mere election under section 1504(c)(2) will not cause the creation of a new group or the termination of an affiliated group that files a consolidated return in the immediately preceding taxable year.

(2) *Effect of eligibility*. If a life member is eligible after an election under section 1504(c)(2), it may not be included as a member of an affiliated group as defined in section 1504(c)(1).

(3) *Eligible and ineligible life companies*. If any life company was a member of an affiliated group of life companies (as defined in section 1504(c)(1)) but is ineligible for a taxable year for which the election under section 1504(c)(2) is effective, that year is not a separate return year merely by reason of the election under section 1504(c)(2) in applying §§ 1.1502–13, 1.1502–18, and 1.1502–19 to transactions occurring in prior consolidated return years of that affiliated group. In addition, if more than one ineligible life member of the group (as defined in section 1504(c)(1)) joined in the filing of a consolidated return in the taxable year immediately preceding the year for which the election under section 1504(c)(2) is effective and, solely as a result of the election, one of the ineligible life members becomes the common parent of such a group (section 1504(c)(1)), the group must continue to file a consolidated return. For example, assume that L_1 owns all of the stock of S_1 and all of the stock of L_2. L_2 owns the stock of L_3. L_1, L_2, and L_3 are life companies and S_1 is a nonlife company. Assume further that in 1981, L_1, L_2, and L_3 file a consolidated return but L_1 makes the election under section 1504(c)(2) for 1982 and L_2 and L_3 are ineligible. L_2 and L_3 must continue to file a consolidated return in 1982. Moreover, L_2 could elect in 1982 to file a consolidated return (section 1504(c)(1)) with L_3 even if they did not file a consolidated return in 1981 with L_1.

(4) *Inclusion of life company*. If a life company is ineligible in the consolidated return year for which the election is effective, it will be treated as an includible corporation for the common parent's first taxable year in which the company becomes eligible.

(5) *Dividends received deduction*. Section 243(b)(5) defines the term affiliated group for purposes of the election to deduct 100 percent of the qualifying dividends received by a member from another member of the group. Section 246(b)(6) limits certain multiple tax benefits and the deduction itself. Section 243(b) (5) and (6) do not apply to the mutual companies and life companies that are eligible corporations. See section 1504(c)(2)(B)(i). Thus, the common parent of the group may elect to deduct 100 percent of the qualifying dividends received from an ineligible life company.

(6) *Controlled group*. Sections 1563 (a)(4), (b)(2)(D), and (b)(3)(C) (insofar as it applies to corporations described in section 1563(b)(2)(D)) do not apply to any eligible or ineligible life company that is a member of the group for a taxable year during which the election is effective. See paragraph (d)(4) of this section for the definition of group.

(7) *Consolidated tax*. The tax liability of a group for a consolidated return year (before application of credits against that tax) is computed on a consolidated basis by adding together the following taxes:

(i) The tax imposed under section 11 on consolidated taxable income (as determined under paragraph (g) of this section). The taxes imposed under sections 802(a), 821(a), and 831(a) will each be treated as a tax imposed under section 11.

(ii) The tax imposed by section 1201 on consolidated net capital gain (as determined under paragraph (o) of this section) in lieu of the tax imposed under paragraph (f)(7)(i) of this section on that gain.

(iii) Any taxes described in §1.1502–2 (other than by paragraphs (a), (f), and (h) thereof).

(g) *Consolidated taxable income*. The consolidated taxable income is the sum of the following three amounts:

(1) *Nonlife consolidated taxable income*. The nonlife consolidated taxable income (as defined in paragraph (h) of this section) of the nonlife subgroup, as set off by the life subgroup losses as provided in paragraph (n) of this section. The amount in this paragraph (g)(1) may not be less than zero.

(2) *Consolidated partial LICTI*. The consolidated partial LICTI (as defined in paragraph (j) of this section) of the life subgroup, as set off by the nonlife subgroup losses as provided in paragraph (m) of this section. The amount in this paragraph (g)(2) may not be less than zero.

(3) *Surplus accounts*. The sum of the amounts subtracted under section 815 from the policyholders' surplus accounts of the life members.

(h) *Nonlife consolidated taxable income*—(1) *In general*. Nonlife consolidated taxable income is the consolidated taxable income of the nonlife subgroup, computed under §1.1502–11 as modified by this paragraph (h). For this purpose, separate taxable income of a member includes separate mutual insurance company taxable income (as defined in section 821(b)) and insurance company taxable income (as defined in section 832).

(2) *Nonlife consolidated net operating loss deduction*—(i) *In general*. In applying §§1.1502–21 or 1.1502-21A (as appropriate), the rules in this subparagraph (2) apply in determining for the nonlife subgroup the nonlife net operating loss and the portion of the nonlife net operating loss carryovers and carrybacks to the taxable year.

(ii) *Nonlife CNOL*. The nonlife consolidated net operating loss is determined under §§1.1502–21(A)(f) or 1.1502-21(e) (as appropriate) by treating the nonlife subgroup as the group.

(iii) *Carryback*. The nonlife consolidated net operating loss for the nonlife subgroup is carried back under §§1.1502–21A or 1.1502-21 (as appropriate) to the appropriate years (whether consolidated or separate) before the loss may be used as a nonlife subgroup loss under paragraphs (g)(2) and (m) of this section to set off consolidated partial LICTI in the year the loss arose. The election under section 172(b)(3)(C) to relinquish the entire carryback period for the net operating loss of the nonlife subgroup may be made by the common parent of the

group. Furthermore, the election may be made even though the election under section 812(b)(3) and paragraph (l)(3)(iii) of this section is not made.

(iv) *Subgroup rule.* In determining the portion of the nonlife consolidated net operating loss that is absorbed when the loss is carried back to a consolidated return year beginning after December 31, 1981, §§1.1502–21A or 1.1502-21 (as appropriate) is applied by treating the nonlife subgroup as the group. Therefore, the absorption is determined without taking into account any life subgroup losses that were previously reported on a consolidated return as setting off nonlife consolidated taxable income for the year to which the nonlife loss is carried back.

(v) *Carryover.* The portion of the nonlife consolidated net operating loss that is not absorbed in a prior year as a carryback, or as a nonlife subgroup loss that set off consolidated partial LICTI for the year the loss arose, constitutes a nonlife carryover under this subparagraph (2) to reduce nonlife consolidated taxable income before that portion may constitute a nonlife subgroup loss that sets off consolidated partial LICTI for a particular year.

(vi) *Transitional rules.* The nonlife consolidated net operating loss deduction is subject to a transitional rule limitation in paragraph (h)(3) of this section.

(vii) *Example.* The following example illustrates this paragraph (h)(2). In the example, L indicates a life company, another letter indicates a nonlife company, and each corporation uses the calendar year as its taxable year.

Example. P owns all of the stock of S and L_1. L_1 owns all of the stock of L_2. For 1982, the group first files a consolidated return for which the election under section 1504(c)(2) is effective. P and S filed consolidated returns for 1979 through 1981. In 1982, the P–S group sustains a nonlife consolidated net operating loss. The loss is carried back to the consolidated return years 1979, 1980, and 1981 of P and S by using the principles of §§1.1502–21A and 1.1502–79A and, because the election in 1982 under section 1504(c)(2) does not result under paragraph (f)(1) of this section in the creation of a new group or the termination of the P–S nonlife group, the loss is absorbed on the consolidated return in those years without regard to whether the loss in 1982 is attributable to P or S and without regard to their contribution to consolidated taxable income in 1979, 1980, or 1981. The portion of the loss not absorbed in 1979, 1980, and 1981 may serve as a nonlife subgroup loss in 1982 that may set off the consolidated partial LICTI of L_1 and L_2 under paragraphs (g)(2) and (m) of this section.

(3) *Transitional rule*—(i) *In general.* The portion of the nonlife consolidated net operating loss deduction in a consolidated return year beginning after December 31, 1980 (referred to as ''post-1980 year'') attributable to net operating losses sustained in separate return years ending before January 1, 1981 (referred to as ''pre-1981 year''), is subject to the rules and limitations in this subparagraph (3).

(ii) *Separate nonlife groups.* To determine the limitation, first, identify for the post-1980 year one or more separate affiliated groups of nonlife companies (as defined in section 1504 without section 1504(c)(2)). For this purpose, a single nonlife company may constitute a separate affiliated group if (A) it is not otherwise a member of a separate group or (B) it has a net operating loss sustained in the pre-1981 year that may be carried over and that year is a separate return limitation year (determined under §1.1502–1(f) without paragraph (d)(11) of this section).

(iii) *Carryover.* Second, identify the pre-1981 year net operating losses that may be carried over and that are attributable to each separate affiliated group of nonlife companies. The separate return limitation year rules in §§1.1502–21A(c) or 1.1502-21(c) (as appropriate) do not apply to any of these carryovers.

(iv) *Limitation.* Third, treat the last taxable year ending before January 1, 1981, as if in that year there was a consolidated return change of ownership of each such separate affiliated group of nonlife companies and apply the consolidated return change of ownership limitation in §1.1502–21A(d) to the losses of each group by treating the members of each separate group as old members.

(v) *Examples.* The following examples illustrate this paragraph (h)(3). In the examples L indicates a life company, another letter indicates a nonlife company, and each corporation uses the calendar year as its taxable year.

Example (1). Throughout all of 1982, P owns all of the stock of S and L_1 and L_1 owns all of the stock of L_2 which in turn owns all of the stock of S_1. Thus, for 1982, there are two nonlife subgroups under this subparagraph (3), P–S and S_1. For 1981, P and S did not file a consolidated return and for 1980 P has a net operating loss of $200,000. Assume that P had no income in 1981. For 1982, the group makes an election under section 1504(c)(2) to file a consolidated return and all corporations are eligible corporations. The consolidated taxable income for the nonlife subgroup for 1982 (determined without the consolidated net operating loss deduction) recomputed by including only items of income and deduction of P and S is $120,000. If $120,000 is the § 1.1502–21(d)(2) amount for P and S, then the amount of P's net operating loss for 1980 that may be carried over to P and S for 1982 cannot exceed $120,000.

Example (2). (a) P owns all of the stock of S_1. On January 1, 1979, P purchased all of the stock of L_1 which owns all of the stock of L_2 and S_2. Prior to 1984, all of the corporations filed separate returns. For 1984, the group makes an election under section 1504(c)(2) to file a consolidated return.

(b) 1981, 1982, and 1983 are not treated under paragraph (d)(11) of this section as separate return limitation years of the P, S_1, and S_2 nonlife subgroup. However, P and S_1 will be treated as old members under paragraph (h)(3)(iv) of this section and under § 1.1502–21A(d) with respect to their losses in 1979 and 1980 (whether a consolidated return was filed or separate returns were filed) so that the portion of nonlife consolidated taxable income attributable to S_2 may not absorb the losses of P or S_1. The rules that apply to the P–S_1 nonlife subgroup for 1979 and 1980 apply in an identical way to S_2 by treating S_2 as a subgroup separate from the P–S_1 nonlife subgroup. See section 1507(c)(2)(A) of the Tax Reform Act of 1976.

(c) Similarly, L_1 and L_2 are treated as old members under paragraphs (l)(3) and (h)(3)(iv) of this section for losses arising in 1979 and 1980. However, since the L_1—L_2 subgroup is also the life subgroup under paragraph (d)(8) of this section, the limitation in paragraph (h)(3)(iv) of this section does not affect the computation of consolidated partial LICTI for the life subgroup.

(4) *Nonlife consolidated capital gain net income or loss*—(i) *In general.* In applying §§ 1.1502–22 or 1.1502-22A (as appropriate),the rules in this subparagraph (4) apply in determining for the nonlife subgroup the nonlife consolidated capital gain net income or loss and the portion of the nonlife net capital loss carryovers and carrybacks to the taxable year. In particular, the nonlife consolidated capital gain net income and nonlife consolidated net capital loss are determined under the principles of §§ 1.1502–22 or 1.1502-22A(a) (as appropriate) by treating the nonlife subgroup as the group.

(ii) *Additional principles.* In applying §§ 1.1502–22A or 1.1502-22 to nonlife consolidated net capital loss carryovers and carrybacks, the principles set forth in paragraphs (h)(2) (iii) through (v) for applying §§ 1.1502–21 or 1.1502-21A (as appropriate) to nonlife consolidated net operating loss carryovers and carrybacks shall also apply. Further, the portion of nonlife consolidated net capital loss carryovers attributable to losses sustained in taxable years ending before January 1, 1981, is subject to the limitations in paragraph (h)(3) of this section applied by substituting ''net capital loss'' for the term ''net operating loss'' and ''§ 1.1502–22A(d)'' for ''§ 1.1502–21A(d)''.

(iii) *Special rules.* The nonlife consolidated net capital loss is reduced, for purposes of determining the carryovers and carrybacks under §§ 1.1502–22A(b)(1) or 1.1502-22(b) by the lesser of:

(A) The aggregate of the additional capital loss deductions allowed under section 822(c)(6) or section 832(c)(5), or

(B) The nonlife consolidated taxable income computed without capital gains and losses.

(i) [Reserved]

(j) *Consolidated partial LICTI.* [Reserved]

(k) *Consolidated TII*—(1) *General rule.* [Reserved]

(2) *Separate TII.* [Reserved]

(3) *Company's share of investment yield.* [Reserved]

(4) *Life consolidated capital gain net income.* [Reserved]

(5) *Life consolidated net capital loss carryovers and carrybacks.* The life consolidated net capital loss carryovers and carrybacks for the life subgroup are determined by applying the principles of §§ 1.1502–22 or 1.1502–22A (as appropriate) as modified by the following rules in this subparagraph (5):

(i) Life consolidated net capital loss is first carried back (or apportioned to the life members for separate return years) to be absorbed by life consolidated capital gain net income without regard to any nonlife subgroup capital losses and before the life consolidated

net capital loss may serve as a life subgroup capital loss that sets off nonlife consolidated capital gain net income in the year the life consolidated net capital loss arose.

(ii) If a life consolidated net capital loss is not carried back or is not a life subgroup loss that sets off nonlife consolidated capital gain net income in the year the life consolidated net capital loss arose, then it is carried over to the particular year under this paragraph (k)(5) first against life consolidated capital gain net income before it may serve as a life subgroup capital loss that sets off nonlife consolidated capital gain net income in that particular year.

(iii) *Section 818(f).* Capital losses may not be deducted more than once and capital gain will not be included more than once. See section 818(e) and also section 818(f).

(iv) Capital loss carryovers are subject to the transitional rule in paragraph (k)(6) of this section.

(6) *Transitional rule.* The portion of the life consolidated capital loss carryovers attributable to the net capital losses of the life members sustained in separate return years ending before January 1, 1981, is subject to the same limitations as the capital losses of nonlife members in paragraph (h)(4)(iii) of this section by applying the principles of paragraph (h)(3) of this section to each separate affiliated group of life companies.

(l) *Consolidated GO or LO*—(1) *General rule.* [Reserved]

(2) *Separate GO.* [Reserved]

(3) *Consolidated operations loss deduction*—(i) *General rule.* The consolidated operations loss deduction is an amount equal to the consolidated operations loss carryovers and carrybacks to the taxable year. The provisions of §§1.1502–21 or 1.1502–21A (as appropriate) and section 812 apply to the extent not inconsistent with this paragraph (l)(3).

(ii) *Consolidated offset.* For purposes of applying section 812 (b) and (d), the term ''consolidated offset'' means the increase in the consolidated operations loss deduction which reduces consolidated partial LICTI to zero. For setoff of consolidated LO against nonlife consolidated taxable income, see paragraph (n)(2) of this section.

(iii) *Carrybacks.* A consolidated LO is first carried back to be absorbed by GO of a life member under section 809(d)(4) or consolidated partial LICTI (as the case may be under section 818(f)(2)) for prior consolidated return years (or apportioned to the life members for prior separate return years) without regard to any nonlife subgroup losses that were set off against consolidated partial LICTI and before the consolidated LO may serve as a life subgroup loss to be set off against nonlife consolidated taxable income in the year the consolidated LO arose. The election to relinquish the entire carryback period for the consolidated LO of the life subgroup may be made by the common parent of the group. See section 812(b)(3). Furthermore, the election may be made even though the election under section 172(b)(3)(C) and paragraph (h)(2)(iii) of this section is not made.

(iv) *Carryovers.* If a consolidated LO is not carried back or is not applied as a life subgroup loss that set off nonlife consolidated taxable income in the year the consolidated LO arose, then it is carried over to a particular year under this paragraph (l)(3) first against the GO of a life member under section 809(d)(4) or consolidated partial LICTI (as the case may be under section 818(f)(2)) before it may serve as a life subgroup loss that may be set off against nonlife consolidated taxable income for that particular year.

(v) *Transitional rule.* The portion of a consolidated operations loss deduction that is attributable to LOs sustained in separate return years ending before January 1, 1981, is subject to the same rules and limitations that the nonlife consolidated net operating loss deduction is subject to in paragraph (h)(3) of this section as applied by identifying separate affiliated groups of life companies.

(4) *Life consolidated capital gain net income or loss.* Life consolidated capital gain net income or loss is determined in the same manner as under paragraph (k)(4) of this section. However, a life member's company share is determined under section 809 (a) and (b)(3).

(m) *Consolidated partial LICTI setoff by nonlife subgroup losses*—(1) *In general.* The nonlife subgroup losses consist of the nonlife consolidated net operating loss and the nonlife consolidated net capital loss. Under paragraph (g)(2) of this section, consolidated partial LICTI is set off by the amounts of these two consolidated losses specified in paragraph (m)(2) of this section. The setoff is subject to the rules and limitations in paragraph (m)(3) of this section.

(2) *Amount of setoff*—(i) *Current year.* Consolidated partial LICTI for the current taxable year is set off by the portion of the nonlife consolidated net operating loss and nonlife consolidated net capital loss arising in that year that cannot be carried back under paragraph (h) of this section to prior taxable years (whether consolidated or separate return years) of the nonlife subgroup.

(ii) *Carryovers.* The portion of the offsettable nonlife consolidated net operating loss or nonlife consolidated net capital loss that has not been used as a nonlife subgroup loss setoff against consolidated partial LICTI in the year it arose may be carried over to succeeding taxable years under the principles of §§1.1502–21 or 1.1502–21A (as appropriate) (relating to net operating loss deduction) or §§1.1502–22 or 1.1502–22A (as appropriate) (relating to net capital loss carryovers). However, in any particular succeeding year, the losses will be used under paragraph (h) of this section in computing nonlife consolidated taxable income before being used in that year as a nonlife subgroup loss that sets off consolidated partial LICTI.

(3) *Nonlife subgroup loss rules and limitations.* The nonlife subgroup losses are subject to the following operating rules and limitations:

(i) *Separate return years.* The carryovers in paragraph (m)(2)(ii) of this section may include net operating losses and net capital losses of the nonlife members arising in separate return years ending after December 31, 1980, that may be carried over to a succeeding year under the principles (including limitations) of §§1.1502–21 and 1.1502–22 (or §§1.1502–21A and 1.1502–22A, as appropriate). But see subdivision (ix) of this paragraph (m)(3).

(ii) *Capital loss.* Nonlife consolidated net capital loss sets off consolidated partial LICTI only to the extent of life consolidated capital gain net income (as determined under paragraph (l)(4) of this section) and this setoff applies before any nonlife consolidated net operating loss sets off consolidated partial LICTI.

(iii) *Capital gain.* Life consolidated capital gain net income is zero in any taxable year in which the life subgroup has a consolidated LO and, in any taxable year, it may not exceed consolidated partial LICTI.

(iv) *Ordering rule.* Consolidated partial LICTI for a consolidated return year is set off by nonlife subgroup losses for that year before being set off (under paragraph (m)(2)(ii) of this section) by a carryover of a nonlife subgroup loss to that year.

(v) *Setoff at bottom line.* The setoff of nonlife subgroup losses against consolidated partial LICTI does not affect life member deductions that depend in whole or in part on GO or TII. Thus, the setoff does not affect the amount of consolidated partial LICTI (as determined under paragraph (j) of this section) for any taxable year but it merely constitutes an adjustment in arriving at the group's consolidated taxable income under paragraph (g) of this section.

(vi) *Ineligible nonlife member.* (A) The offsetable nonlife consolidated net operating loss that arises in any consolidated return year (that may be set off against consolidated partial LICTI in the current taxable year or in a succeeding taxable year) is the amount computed under paragraph (h)(2)(ii) of this section reduced by the ineligible NOL. For purposes of this subparagraph (3), the ''ineligible NOL'' is in the year the loss arose the amount of the separate net operating loss (determined under §§1.1502–21(b) of any nonlife member that is ineligible in that year (and not the portion of the nonlife consolidated net operating loss attributable under §§1.1502–21(b) to such a member). (B) The carryovers of offsetable nonlife net operating losses under paragraph (m)(2)(ii) of this section do not include an ineligible NOL arising in a consolidated return year or a loss attributable to an ineligible

member arising in a separate return year. See section 1503(c)(2). (C) For absorption within the nonlife subgroup of an ineligible NOL arising in a consolidated return year or a loss of an ineligible member arising in a separate return year which is not a separate return limitation year under paragraph (m)(3)(ix) of this section, see paragraph (m)(3)(vii) of this section.

(vii) *Absorption of ineligible NOL.* (A) If all or a portion of a nonlife member's ineligible NOL (determined under paragraph (m)(3)(vi)(A) of this section) may be carried back or carried over under paragraph (h)(2) of this section to a particular consolidated return year of the nonlife subgroup (absorption year), then notwithstanding §1.1502–21A(b)(3)(ii) or 1.1502–21(b), the amount carried to the absorption year will be absorbed by that member's contribution (to the extent thereof) to nonlife consolidated taxable income for that year.

(B) For purposes of (A) of this subdivision (vii), a member's contribution to nonlife consolidated taxable income for an absorption year is the amount of such income (computed without the portion of the nonlife consolidated net operating loss deduction attributable to taxable years subsequent to the year the loss arose), minus such consolidated taxable income recomputed by excluding both that member's items of income and deductions for the absorption year. The deductions of the member include the prior application of this paragraph (m)(3)(vii) to the absorption of the nonlife consolidated net operating loss deduction for losses arising in taxable years prior to the particular loss year.

(viii) *Election to relinquish carryback.* The offsetable nonlife consolidated net operating loss does not include the amount that could be carried back under paragraph (h) (2) of this section but for the common parent's election under section 172(b)(3)(C) to relinquish the carryback. See section 1503(c)(1).

(ix) *Separate return limitation year.* The offsetable nonlife consolidated net operating and capital loss carryovers do not include any losses attributable to a nonlife member that were sustained (A) in a separate return limitation year (determined without section 1504(b)(2)) of that member (or a predecessor), or (B) in a separate return year ending after December 31, 1980, in which an election was in effect under neither section 1504(c)(2) nor section 243(b)(2). For purposes of this paragraph (m), a separate return limitation year includes a taxable year ending before January 1, 1981. See section 1507(c)(2)(A) of the Tax Reform Act of 1976 and §§1.1502–15 and 1.1502–15A (including applicable exceptions thereto).

(x) *Percentage limitation.* The offsetable nonlife consolidated net operating losses that may be set off against consolidated partial LICTI in a particular year may not exceed a percentage limitation. This limitation is the applicable percentage in section 1503(c)(1) of the lesser of two amounts. The first amount is the sum of the offsetable nonlife consolidated net operating losses under paragraph (m)(2) of this section that may serve in the particular year (determined without this limitation) as a setoff against consolidated partial LICTI. The second amount is consolidated partial LICTI (as defined in paragraph (j) of this section) in the particular year reduced by any nonlife consolidated net capital loss that sets off consolidated partial LICTI in that year.

(xi) *Further limitation.* Any offsetable nonlife consolidated net operating loss remaining after applying the percentage limitation that is carried over to a succeeding taxable year may not be set off against the consolidated partial LICTI attributable to a life member that was not an eligible life member in the year the loss arose. See section 1503(c)(2).

(xii) *Restoration rule.* The carryback of a consolidated LO or life consolidated net capital loss under paragraph (l) of this section that reduces consolidated partial LICTI (or life consolidated capital gain net income) for a prior year may reduce the amount of nonlife subgroup losses that would offset consolidated partial LICTI in that prior year. Thus, that amount may be carried over under paragraph (h) (2) or (4) of this section from that prior year in determining nonlife consolidated taxable income in a succeeding year or serve as offsetable nonlife subgroup losses in a succeeding year.

(4) *Acquired groups.* [Reserved]

(5) *Illustrations.* The following examples illustrates this paragraph (m). In the examples, L indicates a life company, another letter indicates a nonlife company, and each corporation uses the calendar year as its taxable year.

Example (1). P owns all of the stock of L and S. S owns all of the stock of I, a nonlife member that is an ineligible corporation for 1982 under paragraph (d)(13) of this section. For 1982, the group elects under section 1504(c)(2) to file a consolidated return. For 1982, assume that any nonlife consolidated net operating loss may not be carried back to a prior taxable year. Other facts are summarized in the following table.

	Separate taxable income (loss)
P	$100
S	(100)
I	(100)
Nonlife consolidated net operating loss	(100)

Under paragraph (m)(3)(vi) of this section, P's separate income is considered to absorb the loss of S, an eligible member, first and the offsetable nonlife consolidated net operating loss is zero, *i.e.,* the consolidated net operating loss ($100) reduced by I's loss ($100). The consolidated net operating loss ($100) may be carried over, but since it is entirely attributable to I (an ineligible member) its use is subject to the restrictions in paragraph (m)(3)(vi) of this section. The result would be the same if the group contained two additional members, S_1, an eligible member, and I_1, an ineligible member, where S_1 had a loss of ($100) and I_1 had income of $100.

Example (2). The facts are the same as in example (1) except that for 1982 S's separate net operating loss is $200. Assume further that L's consolidated partial LICTI is $200. Under paragraph (m)(3)(vi) of this section, the offsetable nonlife consolidated net operating loss is $100, *i.e.,* the nonlife consolidated net operating loss computed under paragraph (h)(2)(ii) of this section ($200), reduced by the separate net operating loss of I ($100). The offsetable nonlife consolidated net operating loss that may be set off against consolidated partial LICTI in 1982 is $30, *i.e.,* 30 percent of the lesser of the offsetable $100 or consolidated partial LICTI of $200. See paragraph (m)(3)(x) of this section. The nonlife subgroup may carry $170 to 1983 under paragraph (h)(2) of this section against nonlife consolidated taxable income, *i.e.,* consolidated net operating loss ($200) less amount used in 1982 ($30). Under paragraph (m)(2)(ii) of this section, the offsetable nonlife consolidated net operating loss that may be carried to 1983 is $70, *i.e.,* $100 minus $30. The facts and results are summarized in the table below.

	(Dollars omitted)			
	Facts	Offsetable	Limit	Unused loss
	(a)	(b)	(c)	(d)
1. P	100			
2. S.	(200)	(100)		(70)
3. I	(100)			(100)
4. Nonlife subgroup	(200)	(100)	(100)	(170)
5. L	200		200	
6. 30% of lower of line 4(c) or 5(c)			30	
7. Unused offsetable loss				(70)

Accordingly, under paragrah (g) of this section (assuming no amount is withdrawn from L's surplus accounts), consolidated taxable income is $170, *i.e.,* line 5 (a) minus line 6(c)).

Example (3). The facts are the same as in example (2) with the following additions for 1983. The nonlife subgroup has nonlife consolidated taxable income of $50 (all of which is attributable to I) before the nonlife consolidated net operating loss deduction under paragraph (h)(2) of this section. Consolidated partial LICTI is $100. Under paragraph (h)(2) of this section, $50 of the nonlife consolidated net operating loss carryover ($170) is used in 1983 and, under paragraph (m)(3) (vi) and (vii) of this section, the portion used in 1982 is attributable to I, the ineligible nonlife member. Accordingly, the offsetable nonlife consolidated net operating loss from 1982 under paragraph (m)(3)(ii) of this section is $70, *i.e.,* the unused loss from 1982. The offsetable nonlife consolidated net operating loss in 1983 is $24.50, *i.e.,* 35 percent of the lesser of the offsetable loss of $70 or consolidated partial LICTI of $100. Accordingly, under paragraph (g) of this section (assuming no amount is withdrawn from L's surplus accounts), consolidated taxable income is $75.50, *i.e.,* consolidated partial LICTI of $100 minus the offsetable loss of $24.50.

Example (4). P owns all of the stock of S and L. For 1982, all corporations are eligible corporations, and the group elects under section 1504(c)(2) to file a consolidated return,

the nonlife consolidated net operating loss is $100, and the nonlife consolidated net capital loss is $50. Assume that the losses may not be carried back and the capital losses are not attributable to built-in deductions under paragraph (m)(3)(ix) of this section or under § 1.1502–15A. Other facts and the results are set forth in the following table:

	P–S	L
1. Nonlife consolidated net operating loss	($100)	.....
2. Nonlife consolidated capital loss	(50)	.....
3. Consolidated partial LICTI	.....	$100
4. Life consolidated capital gain net income included in line 3	.....	50
5. Offsetable:		
(a) 30% of lower of line (1) or line (3)–(4)	(15)	.....
(b) Line 2	(50)	.....
(c) Total	(65)	.....
6. Unused losses available to be carried over:		
(a) From line 1 (line 1 minus line 5 (a))	(85)	.....
(b) From line 2 (line 2 minus line 5 (b))	0	.....

Accordingly, under paragraph (g) of this section consolidated taxable income is $35, *i.e.*, line 3 minus line 5(c).

Example (5). The facts are the same as in example (4). Assume further that for 1983 L has an LO that is carried back to 1982 and the LO is large enough to reduce consolidated partial LICTI for 1982 to zero as determined before any setoff for nonlife losses. Under paragraph (m)(3)(xii) of this section, the nonlife consolidated net operating loss of $15 and the nonlife consolidated net capital loss of $50 that were set off in 1982 respectively against consolidated partial LICTI and life consolidated capital gain net income are restored. These restored amounts may consititute part of the nonlife consolidated net operating loss carryover to 1983 under paragraph (h)(2) of this section or part of the nonlife net capital loss carryover to 1983 under paragraph (h)(4) of this section.

Example (6). The facts are the same as in example (5) except that L's LO for 1983 as carried back reduces consolidated partial LICTI in 1982 from $100 to $25. Since consolidated partial LICTI of $100 in 1982 (before the carryback) included life consolidated capital gain net income of $50, under paragraph (m)(3)(iii) of this section, the life consolidated capital gain net income is $25, *i.e.*, $50 but not more than $25. Therefore, under paragraph (m)(3)(ii) of this section, the offsetable nonlife capital loss in 1982 is $25 and, under paragraph (m) (3)(xii) of this section, $25 of the $50 nonlife consolidated net capital loss in 1982 may be carried under paragraph (h)(4) of this section to 1983. No nonlife consolidated net operating loss is used as a setoff against consolidated partial LICTI in 1982 under paragraph (m)(3)(xii) of this section by reason of the carryback of the consolidated LO from 1983 to 1982.

(n) *Nonlife consolidated taxable income set off by life subgroup losses*—(1) In *general.* The life subgroup losses consist of the consolidated LO and the life consolidated net capital loss (as determined under paragraph (l)(4) of this section). Under paragraph (g)(1) of this section, nonlife consolidated taxable income is set off by the amounts of these two consolidated losses specified in paragraph (n)(2) of this section.

(2) *Amount of setoff.* The portion of the consolidated LO or life consolidated net capital loss that may be set off against nonlife consolidated taxable income (determined under paragraph (h) of this section) is determined by applying the rules prescribed in paragraphs (m) (2) and (3) of this section in the following manner:

(i) Substitute the term ''life'' for ''nonlife'', and vice versa.

(ii) Substitute the term ''nonlife consolidated taxable income'' for ''consolidated partial LICTI'', and vice versa.

(iii) Substitute the term ''consolidated LO'' for ''non-life consolidated net operating loss'', ''paragraph (l)'' or ''paragraph (j)'' for ''paragraph (h)'', and ''section 812(b)(3)'' for ''section 172(b)(3)(C)''.

(iv) Paragraphs (m)(3)(vi), (vii), (x), and (xi) of this section do not apply to a consolidated LO.

(v) Capital losses may not be deducted more than once. See section 818(e) and also the requirements in section 818(f).

(vi) The setoff of life subgroup losses against nonlife consolidated taxable income does not affect nonlife member deductions that depend in whole or in part on taxable income.

(3) *Illustrations.* The following examples illustrate this paragraph (n). In the examples, L indicates a life company, another letter indicates a nonlife company, and each corporation uses the calendar year as its taxable year.

Example (1). P, S, L_1 and L_2 constitute a group that elects under section 1504(c)(2) to file a consolidated return for 1982. In 1982, the nonlife subgroup consolidated taxable income is $100 and there is $20 of nonlife consolidated net capital loss that cannot be carried back under paragraph (h) of this section to taxable years (whether consolidated or

separate) preceding 1982. The nonlife subgroup has no carryover from years prior to 1982. Consolidated LO is $150 which under paragraph (l) of this section includes life consolidated capital gain net income of $25. The $150 LO is carried back under paragraph (l)(3) of this section to taxable years (whether consolidated or separate) preceding 1982 before it may offset in 1982 nonlife consolidated taxable income. Since life consolidated capital gain net income is zero for 1982, the nonlife capital loss offset is zero.

Example (2). The facts are the same as in example (1). Assume further that no part of the $150 consolidated LO for 1982 can be used by L_1 and L_2 in years prior to 1982. For 1982, $100 of consolidated LO sets off the $100 nonlife consolidated taxable income. The life subgroup carries under paragraph (l)(3) of this section to 1983 $50 of the consolidated LO ($150 minus $100). See paragraph (l)(3)(ii) of this section. The $50 carryover will be used in 1983 against life subgroup income before it may be used in 1983 to setoff nonlife consolidated taxable income.

Example (3). (a) The facts are the same as in example (1), except that for 1982 the nonlife consolidated taxable income is $150 and includes nonlife consolidated capital gain net income of $50, consolidated partial LICTI is $200, and a life consolidated net capital loss is $50. Assume that the $50 life consolidated net capital loss sets off the $50 nonlife consolidated capital gain net income. Consolidated taxable income under paragraph (g) of this section is $300, *i.e.,* nonlife consolidated taxable income ($150) minus the setoff of the life consolidated net capital loss ($50), plus consolidated partial LICTI ($200).

(b) Assume that for 1983 the nonlife consolidated net operating loss is $150. Under paragraph (h)(2) of this section, the loss may be carried back to 1982 against nonlife consolidated taxable income. If P, the common parent, does not elect to relinquish the carryback under section 172(b)(3)(C), the entire $150 must be carried back reducing 1982 nonlife consolidated taxable income to zero and nonlife consolidated capital gain net income to zero. Under paragraph (m)(3)(xii) of this section, the setoff in 1982 of the nonlife consolidated capital gain net income ($50) by the life consolidated net capital loss ($50) is restored. Accordingly, the 1982 life consolidated net capital loss may be carried over by the life subgroup to 1983. Under paragraph (g) of this section, after the carryback consolidated taxable income for 1982 is $200, *i.e.,* nonlife consolidated taxable income ($0) plus consolidated partial LICTI ($200).

Example (4). The facts are the same as in example (3), except that P elects under section 172 (b)(3)(C) to relinquish the carryback of $150 arising in 1983. The setoff in part (a) of example (3) is not restored. However, the offsetable nonlife consolidated net operating loss for 1983 (or that may be carried forward from 1983) is zero. See paragraph (m)(3)(viii) of this section. Nevertheless, the $150 nonlife consolidated net operating loss may be carried forward to be used by the nonlife group.

Example (5). P owns all of the stock of S_1 and of L_1. On January 1, 1978, L_1 purchases all of the stock of L_2. For 1982, the group elects under section 1504(c)(2) to file a consolidated return. For 1982, L_1 is an eligible corporation under paragraph (d)(12) of this section but L_2 is ineligible. Thus, L_1 but not L_2 is a member for 1982. For 1982, L_2 sustains an LO that cannot be carried back. For 1982, L_2 is treated under paragraph (f)(6) of this section as a member of a controlled group of corporations under section 1563 with P, S, and L_1. For 1983, L_2 is eligible and is included on the group's consolidated return. L_2's LO for 1982 that may be carried to 1983 is not treated under paragraph (d)(11) of this section as having been sustained in a separate return limitation year for purposes of computing consolidated partial LICTI of the L_1–L_2 life subgroup for 1983. Furthermore, the portion of L_2's LO not used under paragraph (l)(3) of this section against life subgroup income in 1983 may be included in offsetable consolidated operations loss under paragraph (n)(2) and (m)(3)(i) of this section that reduces in 1983 nonlife consolidated taxable income because L_2's loss in 1982 was not sustained in a separate return limitation year under paragraph (n)(2) and (m)(3)(ix)(A) of this section or in a separate return year (1982) when an election was in effect neither under section 1504(c)(2) nor section 243(b)(2).

(o) *Alternative tax*—(1) *In general.* For purposes of the alternative tax under paragraph (f)(7)(ii) of this section, consolidated net capital gain is the sum of the following two amounts:

(i) The nonlife consolidated net capital gain reduced by any setoff of a life consolidated net capital loss.

(ii) The life consolidated net capital gain reduced by any setoff of a nonlife consolidated net capital loss.

(2) *Net capital gain.* For purposes of this paragraph (o):

(i) Nonlife consolidated net capital gain is computed under §§1.1502–41A or 1.1502–22T (as appropriate) except that it may not exceed nonlife consolidated taxable income (computed under paragraph (h) of this section).

(ii) Life consolidated net capital gain is computed under §§1.1502–41A or 1.1502–22T (as appropriate), applied in a manner consistent with paragraph (l)(4) of this section, except that it may not exceed consolidated partial LICTI (as determined under paragraph (j) of this section).

(iii) *Setoffs*. Setoffs are determined under paragraphs (m) or (n) of this section (as the case may be).

(p) *Transitional rule for credit carryovers*. For limitations on credits arising in taxable years ending before January 1, 1981, that may be carried over to taxable years beginning on or after that date, section 1507(c)(2)(A) of the Tax Reform Act of 1976 and the principles in paragraph (h)(3) of this section (relating to limitations on loss carryovers) apply.

(q) *Preemption*. The rules in this section preempt any inconsistent rules in other sections (§ 1.1502–1 through 1.1502–80) of the consolidated return regulations. For example, the rules in paragraph (m)(3)(vi) apply notwithstanding §§ 1.1502–21A(b)(3) and 1.1502–79A(a)(3) (or § 1.1502–21, as appropriate).

(r) *Other consolidation principles*. The fact that this section treats the life and nonlife members as separate groups in computing, respectively, consolidated partial LICTI (or LO) and nonlife consolidated taxable income (or loss) does not affect the usual rules in §§ 1.1502–0—1.1502–80 unless this section provides otherwise. Thus, the usual rules in § 1.1502–13 (relating to intercompany transactions) apply to both the life and nonlife members by treating them as members of one affiliated group.

(s) *Filing requirements*. Nonlife consolidated taxable income or loss under paragraph (h) of this section shall be determined on a separate Form 1120 or 1120 M and consolidated partial LICTI under paragraph (j) of this section shall be determined on a separate Form 1120 L. The consolidated return shall be made on a separate Form 1120, 1120 M, or 1120 L by the common parent (if the group includes a life company), which shows the set-offs under paragraphs (g), (m), and (n) of this section and clearly indicates by notation on the face of the return that it is a life-nonlife consolidated return (if the group includes a life company). See also § 1.1502–75(j), relating to statements and schedules for subsidiaries.

(Secs. 1502 and 7805 of the Internal Revenue Code of 1954 (68A Stat. 637, 917; 26 U.S.C. 1502, 7805))

[T.D. 7877, 48 FR 11441, Mar. 18, 1983, as amended by T.D. 7912, 48 FR 40215, Sept. 6, 1983; T.D. 8560, 59 FR 41674, Aug. 15, 1994; T.D. 8597, 60 FR 36679–36680, July 18, 1995; T.D. 8677, 61 FR 33324, June 27, 1996; T.D. 8823, 64 FR 36100, July 2, 1999]

§ 1.1502–55 Computation of alternative minimum tax of consolidated groups.

(a) through (h)(3) [Reserved]

(h)(4) *Separate return year minimum tax credit*.

(i) and (ii) [Reserved]

(iii)(A) *Limitation on portion of separate return year minimum tax credit arising in separate return limitation years*. The aggregate of a member's minimum tax credits arising in SRLYs that are included in the consolidated minimum tax credits for all consolidated return years of the group may not exceed—

(*1*) The aggregate for all consolidated return years of the member's contributions to the consolidated section 53(c) limitation for each consolidated return year; reduced by

(*2*) The aggregate of the member's minimum tax credits arising and absorbed in all consolidated return years (whether or not absorbed by the member).

(B) *Computational rules*—(*1*) *Member's contribution to the consolidated section 53(c) limitation*. Except as provided in the special rule of paragraph (h)(4)(iii)(B)(*2*) of this section, a member's contribution to the consolidated section 53(c) limitation for a consolidated return year equals the member's share of the consolidated net regular tax liability minus its share of consolidated tentative minimum tax. The group computes the member's shares by applying to the respective consolidated amounts the principles of section 1552 and the percentage method under § 1.1502–33(d)(3), assuming a 100% allocation of any decreased tax liability. The

group makes proper adjustments so that taxes and credits not taken into account in computing the limitation under section 53(c) are not taken into account in computing the member's share of the consolidated net regular tax, etc. (See, for example, the taxes described in section 26(b) that are disregarded in computing regular tax liability.)

(*2*) *Adjustment for year in which alternative minimum tax is paid*. For a consolidated return year for which consolidated tentative minimum tax is greater than consolidated regular tax liability, the group reduces the member's share of the consolidated tentative minimum tax by the member's share of the consolidated alternative minimum tax for the year. The group determines the member's share of consolidated alternative minimum tax for a year using the same method it uses to determine the member's share of the consolidated minimum tax credits for the year.

(*3*) *Years included in computation*. For purposes of computing the limitation under this paragraph (h)(4)(iii), the consolidated return years of the group include only those years, including the year to which a credit is carried, that the member has been continuously included in the group's consolidated return, but exclude any years after the year to which the credit is carried.

(*4*) *Subgroup principles*. The SRLY subgroup principles under §1.1502–21(c)(2) apply for purposes of this paragraph (h)(4)(iii). The predecessor and successor principles under §1.1502–21(f) also apply for purposes of this paragraph (h)(4)(iii).

(*5*) *Overlap with section 383*. The principles under §1.1502–21(g) apply for purposes of this paragraph (h)(4)(iii). For example, an overlap of this paragraph (h)(4)(iii) and the application of section 383 with respect to a credit carryover occurs if a corporation becomes a member of a consolidated group (the SRLY event) within six months of the change date of an ownership change giving rise to a section 383 credit limitation with respect to that carryover (the section 383 event), with the result that the limitation of this paragraph (h)(4)(iii) does not apply. See §§1.1502–21(g)(2)(ii)(A) and 1.383–1; see also §1.1502–21(g)(4) (subgroup rules).

(C) *Effective date—(1) In general*. This paragraph (h)(4)(iii) generally applies to consolidated return years for which the due date of the income tax return (without extensions) is after March 13, 1998. See §1.1502–3(d)(4) for an optional effective date rule (generally making this paragraph (h)(4)(iii) also applicable to a consolidated return year beginning on or after January 1, 1997, if the due date of the income tax return (without extensions) was on or before March 13, 1998).

(i) Contribution years. In general, a group does not take into account a consolidated taxable year for which the due date of the income tax return (without extensions) is on or before March 13, 1998, in determining a member's (or subgroup's) contributions to the consolidated section 53(c) limitation under this paragraph (h)(4)(iii). However, if a consolidated group chooses to apply the optional effective date rule, the consolidated group shall not take into account a consolidated taxable year beginning before January 1, 1997 in determining a member's (or subgroup's) contributions to the consolidated section 53(c) limitation under this paragraph (h)(4)(iii).

(ii) Special subgroup rule. In the event that the principles of §1.1502–21(g)(1) do not apply to a particular credit carryover in the current group, then solely for purposes of applying this paragraph (h)(4)(iii) to determine the limitation with respect to that carryover and with respect to which the SRLY register (the aggregate of the member's or subgroup's contribution to consolidated section 53(c) limitation reduced by the aggregate of the member's or subgroup's minimum tax credits arising and absorbed in all consolidated return years) began in a taxable year for which the due date of the return is on or before May 25, 2000, the principles of §1.1502–21(c)(2) shall be applied without regard to the phrase ''or for a carryover that was subject to the overlap rule described in paragraph (g) of this section or §1.1502–15(g) with respect to another group (the former group).''

(2) Overlap rule. Paragraph (h)(4)(iii)(B)(*5*) of this section (relating to overlap with section 383) applies to

taxable years for which the due date (without extensions) of the consolidated return is after May 25, 2000. For purposes of paragraph (h)(4)(iii)(B)(*5*) of this section, only an ownership change to which section 383, as amended by the Tax Reform Act of 1986 (100 Stat. 2095), applies and which results in a section 383 credit limitation shall constitute a section 383 event. The optional effective date rule of §1.1502–3(d)(4) (generally making this paragraph (h)(4)(iii) also applicable to a consolidated return year beginning on or after January 1, 1997, if the due date of the income tax return (without extensions) was on or before March 13, 1998) does not apply with respect to paragraph (h)(4)(iii)(B)(*5*) of this section (relating to the overlap rule).

[T.D. 8884, 65 FR 33759, May 25, 2000]

ADMINISTRATIVE PROVISIONS AND OTHER RULES

§ 1.1502–75 Filing of consolidated returns.

(a) *Privilege of filing consolidated returns*—(1) *Exercise of privilege for first consolidated return year*. A group which did not file a consolidated return for the immediately preceding taxable year may file a consolidated return in lieu of separate returns for the taxable year, provided that each corporation which has been a member during any part of the taxable year for which the consolidated return is to be filed consents (in the manner provided in paragraph (b) of this section) to the regulations under section 1502. If a group wishes to exercise its privilege of filing a consolidated return, such consolidated return must be filed not later than the last day prescribed by law (including extensions of time) for the filing of the common parent's return. Such consolidated return may not be withdrawn after such last day (but the group may change the basis of its return at any time prior to such last day).

(2) *Continued filing requirement*. A group which filed (or was required to file) a consolidated return for the immediately preceding taxable year is required to file a consolidated return for the taxable year unless it has an election to discontinue filing consolidated returns under paragraph (c) of this section.

(b) *How consent for first consolidated year exercised*—(1) *General rule*. The consent of a corporation referred to in paragraph (a)(1) of this section shall be made by such corporation joining in the making of the consolidated return for such year. A corporation shall be deemed to have joined in the making of such return for such year if it files a Form 1122 in the manner specified in paragraph (h)(2) of this section.

(2) *Consent under facts and circumstances*. If a member of the group fails to file Form 1122, the Commissioner may under the facts and circumstances determine that such member has joined in the making of a consolidated return by such group. The following circumstances, among others, will be taken into account in making this determination:

(i) Whether or not the income and deductions of the member were included in the consolidated return;

(ii) Whether or not a separate return was filed by the member for that taxable year; and

(iii) Whether or not the member was included in the affiliations schedule, Form 851.

If the Commissioner determines that the member has joined in the making of the consolidated return, such member shall be treated as if it had filed a Form 1122 for such year for purposes of paragraph (h)(2) of this section.

(3) *Failure to consent due to mistake*. If any member has failed to join in the making of a consolidated return under either subparagraph (1) or (2) of this paragraph, then the tax liability of each member of the group shall be determined on the basis of separate returns unless the common parent corporation establishes to the satisfaction of the Commissioner that the failure of such member to join in the making of the consolidated return was due to a mistake of law or fact, or to inadvertence. In such case, such member shall be treated as if it had filed a Form 1122 for such year for purposes of paragraph (h)(2) of this section, and thus joined in the making of the consolidated return for such year.

(c) *Election to discontinue filing consolidated returns*—(1) *Good cause*—(i) *In*

general. Notwithstanding that a consolidated return is required for a taxable year, the Commissioner, upon application by the common parent, may for good cause shown grant permission to a group to discontinue filing consolidated returns. Any such application shall be made to the Commissioner of Internal Revenue, Washington, DC 20224, and shall be made not later than the 90th day before the due date for the filing of the consolidated return (including extensions of time). In addition, if an amendment of the Code, or other law affecting the computation of tax liability, is enacted and the enactment is effective for a taxable year ending before or within 90 days after the date of enactment, then application for such a taxable year may be made not later than the 180th day after the date of enactment, and if the application is approved the permission to discontinue filing consolidated returns will apply to such taxable year notwithstanding that a consolidated return has already been filed for such year.

(ii) *Substantial adverse change in law affecting tax liability*. Ordinarily, the Commissioner will grant a group permission to discontinue filing consolidated returns if the net result of all amendments to the Code or regulations with effective dates commencing within the taxable year has a substantial adverse effect on the consolidated tax liability of the group for such year relative to what the aggregate tax liability would be if the members of the group filed separate returns for such year. Thus, for example, assume P and S filed a consolidated return for the calendar year 1966 and that the provisions of the Code have been amended by a bill which was enacted by Congress in 1966, but which is first effective for taxable years beginning on or after January 1, 1967. Assume further that P makes a timely application to discontinue filing consolidated returns. In order to determine whether the amendments have a substantial adverse effect on the consolidated tax liability for 1967, relative to what the aggregate tax liability would be if the members of the group filed separate returns for 1967, the difference between the tax liability of the group computed on a consolidated basis and taking into account the changes in the law effective for 1967 and the aggregate tax liability of the members of the group computed as if each such member filed separate returns for such year (also taking into account such changes) shall be compared with the difference between the tax liability of such group for 1967 computed on a consolidated basis without regard to the changes in the law effective in such year and the aggregate tax liability of the members of the group computed as if separate returns had been filed by such members for such year without regard to the changes in the law effective in such year.

(iii) *Other factors*. In addition, the Commissioner will take into account other factors in determining whether good cause exists for granting permission to discontinue filing consolidated returns beginning with the taxable year, including:

(a) Changes in law or circumstances, including changes which do not affect Federal income tax liability,

(b) Changes in law which are first effective in the taxable year and which result in a substantial reduction in the consolidated net operating loss (or consolidated unused investment credit) for such year relative to what the aggregate net operating losses (or investment credits) would be if the members of the group filed separate returns for such year, and

(c) Changes in the Code or regulations which are effective prior to the taxable year but which first have a substantial adverse effect on the filing of a consolidated return relative to the filing of separate returns by members of the group in such year.

(2) *Discretion of Commissioner to grant blanket permission*—(i) *Permission to all groups*. The Commissioner, in his discretion, may grant all groups permission to discontinue filing consolidated returns if any provision of the Code or regulations has been amended and such amendment is of the type which could have a substantial adverse effect on the filing of consolidated returns by substantially all groups, relative to the filing of separate returns. Ordinarily, the permission to discontinue shall apply with respect to the taxable year

of each group which includes the effective date of such an amendment.

(ii) *Permission to a class of groups.* The Commissioner, in his discretion, may grant a particular class of groups permission to discontinue filing consolidated returns if any provision of the Code or regulations has been amended and such amendment is of the type which could have a substantial adverse effect on the filing of consolidated returns by substantially all such groups relative to the filing of separate returns. Ordinarily, the permission to discontinue shall apply with respect to the taxable year of each group within the class which includes the effective date of such an amendment.

(3) *Time and manner for exercising election.* If, under subparagraph (1) or (2) of this paragraph, a group has an election to discontinue filing consolidated returns for any taxable year and such group wishes to exercise such election, then the common parent must file a separate return for such year on or before the last day prescribed by law (including extensions of time) for the filing of the consolidated return for such year. See section 6081 (relating to extensions of time for filing returns).

(d) *When group remains in existence*—(1) *General rule.* A group remains in existence for a tax year if the common parent remains as the common parent and at least one subsidiary that was affiliated with it at the end of the prior year remains affiliated with it at the beginning of the year, whether or not one or more corporations have ceased to be subsidiaries at any time after the group was formed. Thus, for example, assume that individual A forms corporation P. P acquires 100 percent of the stock of corporation S on January 1, 1965, and P and S file a consolidated return for the calendar year 1965. On May 1, 1966, P acquires 100 percent of the stock of S–1, and on July 1, 1966, P sells the stock of S. The group (consisting originally of P and S) remains in existence in 1966 since P has remained as the common parent and at least one subsidiary (now S–1) remains affiliated with it.

(2) *Common parent no longer in existence*—(i) *Mere change in identity.* For purposes of this paragraph, the common parent corporation shall remain as the common parent irrespective of a mere change in identity, form, or place of organization of such common parent corporation (see section 368(a)(1)(F)).

(ii) *Transfer of assets to subsidiary.* The group shall be considered as remaining in existence notwithstanding that the common parent is no longer in existence if the members of the affiliated group succeed to and become the owners of substantially all of the assets of such former parent and there remains one or more chains of includible corporations connected through stock ownership with a common parent corporation which is an includible corporation and which was a member of the group prior to the date such former parent ceases to exist. For purposes of applying paragraph (f)(2)(i) of § 1.1502–1 to separate return years ending on or before the date on which the former parent ceases to exist, such former parent, and not the new common parent, shall be considered to be the corporation described in such paragraph.

(iii) *Taxable years.* If a transfer of assets described in subdivision (ii) of this subparagraph is an acquisition to which section 381(a) applies and if the group files a consolidated return for the taxable year in which the acquisition occurs, then for purposes of section 381:

(a) The former common parent shall not close its taxable year merely because of the acquisition, and all taxable years of such former parent ending on or before the date of acquisition shall be treated as taxable years of the acquiring corporation, and

(b) The corporation acquiring the assets shall close its taxable year as of the date of acquisition, and all taxable years of such corporation ending on or before the date of acquisition shall be treated as taxable years of the transferor corporation.

(iv) *Exception.* With respect to acquisitions occurring before January 1, 1971, subdivision (iii) of this subparagraph shall not apply if the group, in its income tax return, treats the taxable year of the former common parent as having closed as of the date of acquisition.

(3) *Reverse acquisitions*—(i) *In general.* If a corporation (hereinafter referred to as the ''first corporation'') or any

member of a group of which the first corporation is the common parent acquires after October 1, 1965:

(a) Stock of another corporation (hereinafter referred to as the second corporation), and as a result the second corporation becomes (or would become but for the application of this subparagraph) a member of a group of which the first corporation is the common parent, or

(b) Substantially all the assets of the second corporation,

in exchange (in whole or in part) for stock of the first corporation, and the stockholders (immediately before the acquisition) of the second corporation, as a result of owning stock of the second corporation, own (immediately after the acquisition) more than 50 percent of the fair market value of the outstanding stock of the first corporation, then any group of which the first corporation was the common parent immediately before the acquisition shall cease to exist as of the date of acquisition, and any group of which the second corporation was the common parent immediately before the acquisition shall be treated as remaining in existence (with the first corporation becoming the common parent of the group). Thus, assume that corporations P and S comprised group PS (P being the common parent), that P was merged into corporation T (the common parent of a group composed of T and corporation U), and that the shareholders of P immediately before the merger, as a result of owning stock in P, own 90 percent of the fair market value of T's stock immediately after the merger. The group of which P was the common parent is treated as continuing in existence with T and U being added as members of the group, and T taking the place of P as the common parent.

For purposes of determining under *(a)* of this subdivision whether the second corporation becomes (or would become) a member of the group of which the first corporation is the common parent, and for purposes of determining whether the former stockholders of the second corporation own more than 50 percent of the outstanding stock of the first corporation, there shall be taken into account any acquisitions or redemptions of the stock of either corporation which are pursuant to a plan of acquisition described in *(a)* or *(b)* of this subdivision.

(ii) *Prior ownership of stock.* For purposes of subdivision (i) of this subparagraph, if the first corporation, and any members of a group of which the first corporation is the common parent, have continuously owned for a period of at least 5 years ending on the date of the acquisition an aggregate of at least 25 percent of the fair market value of the outstanding stock of the second corporation, then the first corporation (and any subsidiary which owns stock of the second corporation immediately before the acquisition) shall, as a result of owning such stock, be treated as owning (immediately after the acquisition) a percentage of the fair market value of the first corporation's outstanding stock which bears the same ratio to *(a)* the percentage of the fair market value of all the stock of the second corporation owned immediately before the acquisition by the first corporation and its subsidiaries as *(b)* the fair market value of the total outstanding stock of the second corporation immediately before the acquisition bears to *(c)* the sum of *(1)* the fair market value, immediately before the acquisition, of the total outstanding stock of the first corporation, and *(2)* the fair market value, immediately before the acquisition, of the total outstanding stock of the second corporation (other than any such stock owned by the first corporation and any of its subsidiaries). For example, assume that corporation P owns stock in corporation T having a fair market value of $100,000, that P acquires the remaining stock of T from individuals in exchange for stock of P, that immediately before the acquisition the total outstanding stock of T had a fair market value of $150,000, and that immediately before the acquisition the total outstanding stock of P had a fair market value of $200,000. Assuming P owned at least 25 percent of the fair market value of T's stock for 5 years, then for purposes of this subparagraph, P is treated as owning (immediately after the acquisition) 40 percent of the fair market value of its own outstanding stock, determined as follows:

[$150,000/($200,000+$50,000)]×662/3%=40%.

Thus, if the former individual stockholders of T own, immediately after the acquisition more than 10 percent of the fair market value of the outstanding stock of P as a result of owning stock of T, the group of which T was the common parent is treated as continuing in existence with P as the common parent, and the group of which P was the common parent before the acquisition ceases to exist.

(iii) *Election*. The provisions of subdivision (ii) of this subparagraph shall not apply to any acquisition occurring in a taxable year ending after October 7, 1969, unless the first corporation elects to have such subdivision apply. The election shall be made by means of a statement, signed by any officer who is duly authorized to act on behalf of the first corporation, stating that the corporation elects to have the provisions of §1.1502–75(d)(3)(ii) apply and identifying the acquisition to which such provisions will apply. The statement shall be filed, on or before the due date (including extensions of time) of the return for the group's first consolidated return year ending after the date of the acquisition, with the internal revenue officer with whom such return is required to be filed.

(iv) *Transfer of assets to subsidiary*. This subparagraph shall not apply to a transaction to which subparagraph (2)(ii) of this paragraph applies.

(v) *Taxable years*. If, in a transaction described in subdivision (i) of this subparagraph, the first corporation files a consolidated return for the first taxable year ending after the date of acquisition, then:

(a) The first corporation, and each corporation which, immediately before the acquisition, is a member of the group of which the first corporation is the common parent, shall close its taxable year as of the date of acquisition, and each such corporation shall, immediately after the acquisition, change to the taxable year of the second corporation, and

(b) If the acquisition is a transaction described in section 381(a)(2), then for purposes of section 381:

(1) All taxable years ending on or before the date of acquisition, of the first corporation and each corporation which, immediately before the acquisition, is a member of the group of which the first corporation is the common parent, shall be treated as taxable years of the transferor corporation, and

(2) The second corporation shall not close its taxable year merely because of such acquisition, and all taxable years ending on or before the date of acquisition, of the second corporation and each corporation which, immediately before the acquisition, is a member of any group of which the second corporation is the common parent, shall be treated as taxable years of the acquiring corporation.

(vi) *Exception*. With respect to acquisitions occurring before April 17, 1968, subdivision (v) of this subparagraph shall not apply if the parties to the transaction, in their income tax returns, treat subdivision (i) as not affecting the closing of taxable years or the operation of section 381.

(4) [Reserved]

(5) *Coordination with section 833*—(i) *Election to continue old group*. If, solely by reason of the enactment of section 833 (relating to certain Blue Cross or Blue Shield organizations and certain other health insurers), an organization to which section 833 applies (a ''section 833 organization'') became the new common parent of an old group on January 1, 1987, the old group may elect to continue in existence with that section 833 organization as its new common parent, provided all the old groups having the same section 833 organization as their new common parent elect to continue in existence. To revoke this election, see paragraph (d)(5)(x) of this section. To file as a new group, see paragraph (d)(5)(v) of this section.

(ii) *Old group*. For purposes of this paragraph (d)(5), an old group is a group which, for its last taxable year ending in 1986, either filed a consolidated return or was eligible to (but did not) file a consolidated return.

(iii) *Manner of electing to continue*—(A) *Deemed election*. If all the members of all the old groups having the same section 833 organization as their new common parent are included for the

first taxable year beginning after December 31, 1986, on the same consolidated (or amended consolidated) return and a Form 1122 was not filed, the old groups are deemed to have elected under paragraph (d)(5)(i) of this section to continue in existence.

(B) *Delayed election*. If a deemed election to continue in existence was not made under paragraph (d)(5)(iii)(A) of this section, all the members of all the old groups having the same section 833 organization as their new common parent may make a delayed election under paragraph (d)(5)(i) of this section to continue in existence by:

(*1*) Filing an appropriate consolidated (or amended consolidated) return or returns for each taxable year beginning after December 31, 1986, (notwithstanding §1.1502–75(a)(1)) on or before January 3, 1991, and

(*2*) On the top of any such return prominently affixing a statement containing the following declaration: ''THIS RETURN'' (or, if applicable, ''AMENDED RETURN'') ''REFLECTS A DELAYED ELECTION TO CONTINUE UNDER §1.1502–75T(d)(5)(iii)(B)''. A delayed election to continue in existence automatically revokes a deemed election to file as a new group which was made under paragraph (d)(5)(vi) of this section.

(iv) *Effects of election to continue in existence*. If an old group or groups elect to continue in existence under paragraph (d)(5)(i) of this section, the following rules apply:

(A) *Taxable years*. Each member that filed returns other than on a calendar year basis shall close its taxable year on December 31, 1986, and change to a calendar year beginning on January 1, 1987. See section 843 and §1.1502–76(a)(1).

(B) *Carryovers from separate return limitation years*. For purposes of applying the separate return limitation year rules to carryovers from taxable years beginning before 1987 to taxable years beginning after 1986, the following rules apply:

(*1*) Any taxable year beginning before 1987 of a corporation that was not a member of an old group (including a section 833 organization) will be treated as a separate return limitation year;

(*2*) Any taxable year beginning before 1987 of a corporation that was a member of an old group that, without regard to this section and the enactment of section 833, was a separate return limitation year will continue to be treated as a separate return limitation year;

(*3*) Any taxable year beginning before 1987 of a member of an old group (other than a separate return limitation year described in paragraph (d)(5)(iv)(B)(*2*) of this section) will not be treated as a separate return limitation year with respect to any corporation that was a member of such group for each day of that taxable year; and

(*4*) Any taxable year beginning before 1987 of a member of an old group will be treated as a separate return limitation year with respect to any corporation that was not a member of such group for each day of that taxable year (*e.g.*, a corporation that was not a member of an old group, including a section 833 organization, or a corporation that was a member of another old group).

(C) *Five-year rules for life-nonlife groups*. Any life-nonlife election under section 1504(c)(2) in effect for an old group remains in effect. Any old group which was eligible to make a life-nonlife election will remain eligible to make the election. For purposes of section 1503(c), a nonlife member is treated as ineligible under §1.1502–47(d)(13) with respect to a life member, unless both were members of the same affiliated group (determined without regard to the exclusions in section 1504(b) (1) and (2)) for five taxable years immediately preceding the taxable year in which the loss arose. See paragraph (d)(5)(ix) of this section for a tacking rule.

(v) *Election to file as a new group*. If, solely by reason of the enactment of section 833, a section 833 organization became the new common parent of an old group on January 1, 1987, the application of the five-year prohibition on reconsolidation in section 1504(a)(3)(A) to the old group is waived and the old group together with the new section 833 organization common parent may elect to file as a new group provided that all includible corporations elect to file a consolidated (or amended consolidated) return as a new group for the

first taxable year beginning after December 31, 1986. To revoke this election, see paragraph (d)(5)(x) of this section.

(vi) *Manner of electing to file as a new group*—(A) *Deemed election*. The old group or groups and the section 833 organization are deemed to have elected under paragraph (d)(5)(v) of this section to file as a new group by filing, for the first taxable year beginning after December 31, 1986, a Form 1122 and a consolidated (or amended consolidated) tax return.

(B) *Delayed election*. If a deemed election to file as a new group was not made pursuant to paragraph (d)(5)(vi)(A) of this section, the old group or groups and the section 833 organization may make a delayed election under paragraph (d)(5)(v) of this section to file as a new group by

(*1*) Filing an appropriate consolidated (or amended consolidated) return or returns for each taxable year beginning after December 31, 1986 (notwithstanding §1.1502–75(a)(1)) on or before January 3, 1991, and

(*2*) On the top of any such return prominently affixing a statement containing the following declaration: ''THIS RETURN'' (or, if applicable, ''AMENDED RETURN'') ''REFLECTS A DELAYED ELECTION TO FILE AS A NEW GROUP UNDER §1.1502–75T (d)(5)(vi)(B)''. A delayed election to file as a new group automatically revokes any deemed election to continue in existence which was made under paragraph (d)(5)(iii) of this section.

(vii) *Effects of election to file as a new group*. If an old group or groups elect to file as a new group under paragraph (d)(5)(v) of this section, the following rules apply:

(A) *Termination*. Each old group is treated as if it terminated on January 1, 1987, and the termination is not treated as resulting from the acquisition by a nonmember of all of the stock of the common parent.

(B) *Taxable years*. Each member that filed returns other than on a calendar year basis shall close its taxable year on December 31, 1986, and change to a calendar year beginning on January 1, 1987. See section 843 and §1.1502–76(a)(1).

(C) *Separate return limitation year and life-nonlife groups*. For purposes of §1.1502–1(f), sections 1503(c) and 1504(c), and §1.1502–47, the group is treated as coming into existence as a new group on January 1, 1987. Thus, for example, paragraphs (d)(5)(iv) (B) and (C) of this section do not apply.

(viii) *Earnings and profits*. All distributions after January 1, 1987 by a corporation, whether or not such corporation was a member of an old group, to an existing Blue Cross or Blue Shield organization (as defined in section 833(c)(2)) out of earnings and profits accumulated before 1987 are deemed made out of earnings and profits accumulated in pre-affiliation years. See §1.1502–32(h)(5).

(ix) *Five-year tacking rules for certain life-nonlife groups*. For purposes of applying §1.1502–47(d) (5) and (12) to any taxable year ending after 1986 to a corporation, whether or not the corporation was a member of an old group,

(A) The determination of whether the corporation was in existence and a member or tentatively treated as a member of a group, for taxable years ending before 1987, is made without regard to the exclusions under section 1504(b) (1) and (2) of any section 833 organization or life insurance company (as the case may be) and

(B) A section 833 organization is not treated as having a change in tax character solely by reason of the loss of its tax-exempt status due to the enactment of section 833.

This paragraph (d)(5)(ix) does not apply if an election to file as a new group under paragraph (d)(5)(v) of this section is made.

(x) *Time to revoke elections made before September 5, 1990*. An election by an old group to continue in existence or to file as a new group that was made (or deemed made) before September 5, 1990, may be revoked by filing an appropriate return (or returns) on or before January 3, 1991. For purposes of this paragraph (d)(5)(x), appropriate returns include separate returns filed by each member of the group or consolidated returns filed in accordance with a delayed election either under paragraph (d)(5)(iii)(B) or (vi)(B) of this section.

(xi) *Examples*. The following examples illustrate this paragraph (d)(5). In

these examples, each corporation uses the calendar year as its taxable year.

Example 1. B is a section 833 organization. For several years, B has owned all of the outstanding stock of X, Y, and Z. X has owned all the outstanding stock of X_1 throughout X_1's existence and Y has owned all of the outstanding stock of Y_1 throughout Y_1's existence. For 1986 X and X_1 filed a consolidated federal income tax return but Y and Y_1 filed separate returns. Under paragraph (d)(5)(ii) of this section, X and X_1 and Y and Y_1 each constitute an old group because they either filed a consolidated return or were eligible to file a consolidated return for 1986. The X and Y groups may elect under paragraph (d)(5)(i) of this section to continue in existence. If they elect to continue, under paragraph (d)(5)(iv)(B) of this section, the separate return limitation year rules apply as follows: any taxable year of B or Z beginning before 1987 is treated as a separate return limitation year with respect to each other and to all other members of the group; any taxable year of X or X_1 beginning before 1987 is treated as a separate return limitation year with respect to B, Z, Y and Y_1, but not with respect to each other; and any taxable year of Y or Y_1 beginning before 1987 is treated as a separate return limitation year with respect to B, Z, X and X_1, but not with respect to each other.

Example 2. The facts are the same as in Example 1 except that B is owned by C, another section 833 organization. If the X and Y groups elect to continue, the results are the same as in Example 1, except that, under paragraph (d)(5)(iv)(B)(*1*) of this section, for purposes of applying the separate return limitation year rules, any taxable year of C beginning before 1987 is also treated as a separate return limitation year with respect to all other members of the group.

Example 3. The facts are the same as in Example 1 except that Y purchased Y_1 on January 1, 1985. If the X and Y groups elect to continue, the results are the same as in Example 1, except that, under paragraph (d)(5)(iv)(B)(*2*) of this section, for purposes of applying the separate return limitation year rules, any taxable year of Y_1 beginning before 1985 is treated as a separate return limitation year with respect to Y as well as with respect to all other members of the group.

Example 4. B, a section 833 organization, has owned all the stock of X since November 1984. X has owned all the stock of L, a life insurance company, throughout L's existence. In 1986, X and L properly filed a life-nonlife consolidated return. Under paragraph (d)(5)(i) of this section, the X group elects to continue in existence. Under paragraph (d)(5)(iv)(C) of this section, the life-nonlife election will remain in effect. However, losses of B which arise before 1990 cannot be used to offset the income of L. See section 1503(c)(2) and §1.1502–47(d)(13) and paragraph (d)(5)(iv)(C) of this section. Under paragraph (d)(5)(iv)(B) of this section, the separate return limitation year rules apply as follows: any taxable year of B beginning before 1987 is treated as a separate return limitation year with respect to all other members of the group; and any taxable year of X or L beginning before 1987 is treated as a separate return limitation year with respect to B, but not with respect to each other.

Example 5. The facts are the same as Example 4 except that, on January 1, 1984, B formed L_1, a life insurance company. Under paragraph (d)(5)(ix) of this section and section 1504(c), the first year L_1 is eligible to join in B's life-nonlife election is 1989.

Example 6. The facts are the same as in Example 4 except that B and the X group elect under paragraph (d)(5)(v) of this section to file as a new group. The X group will be considered to have terminated under §1.1502–75(d)(1) on December 31, 1986. X and L are each separately subject to the separate return limitation year rules of §1.1502–1(f). The first year L and L_1 are eligible to join the new group in a life-nonlife election is 1992 (five years after the new group is formed). See section 1504(c)(2) and paragraphs (d)(5)(vii)(C) and (ix) of this section.

The provisions contained in this Treasury decision are needed to immediately amend the consolidated return regulations in response to changes made by section 1012 of the Tax Reform Act of 1986. It is therefore found impracticable and contrary to the public interest to issue this Treasury decision with notice and public procedure under section 553(b) of title 5 of the United States Code or subject to the effective date limitations of section 553(d) of title 5, United States Code.

(e) *Failure to include subsidiary.* If a consolidated return is required for the taxable year under the provisions of paragraph (a)(2) of this section, the tax liability of all members of the group for such year shall be computed on a consolidated basis even though:

(1) Separate returns are filed by one or more members of the group, or

(2) There has been a failure to include in the consolidated return the income of any member of the group.

If subparagraph (1) of this paragraph applies, the amounts assessed or paid upon the basis of separate returns shall be considered as having been assessed or paid upon the basis of a consolidated return.

(f) *Inclusion of one or more corporations not members of the group*—(1) *Method of determining tax liability*. If a consolidated return includes the income of a corporation which was not a member of the group at any time during the consolidated return year, the tax liability of such corporation will be determined upon the basis of a separate return (or a consolidated return of another group, if paragraph (a)(2) or (b)(3) of this section applies), and the consolidated return will be considered as including only the income of the corporations which were members of the group during that taxable year. If a consolidated return includes the income of two or more corporations which were not members of the group but which constitute another group, the tax liability of such corporations will be computed in the same manner as if separate returns had been made by such corporations unless the Commissioner upon application approves the making of a consolidated return for the other group or unless under paragraph (a)(2) of this section a consolidated return is required for the other group.

(2) *Allocation of tax liability*. In any case in which amounts have been assessed and paid upon the basis of a consolidated return and the tax liability of one or more of the corporations included in the consolidated return is to be computed in the manner described in subparagraph (1) of this paragraph, the amounts so paid shall be allocated between the group composed of the corporations properly included in the consolidated return and each of the corporations the tax liability of which is to be computed on a separate basis (or on the basis of a consolidated return of another group) in such manner as the corporations which were included in the consolidated return may, subject to the approval of the Commissioner, agree upon or in the absence of an agreement upon the method used in allocating the tax liability of the members of the group under the provisions of section 1552(a).

(g) *Computing periods of limitation*—(1) *Income incorrectly included in consolidated return*. If:

(i) A consolidated return is filed by a group for the taxable year, and

(ii) The tax liability of a corporation whose income is included in such return must be computed on the basis of a separate return (or on the basis of a consolidated return with another group), then for the purpose of computing any period of limitation with respect to such separate return (or such other consolidated return), the filing of such consolidated return by the group shall be considered as the making of a return by such corporation.

(2) *Income incorrectly included in separate returns*. If a consolidated return is required for the taxable year under the provisions of paragraph (a)(2) of this section, the filing of separate returns by the members of the group for such year shall not be considered as the making of a return for the purpose of computing any period of limitation with respect to such consolidated return unless there is attached to each such separate return a statement setting forth:

(i) The most recent taxable year of the member for which its income was included in a consolidated return, and

(ii) The reasons for the group's belief that a consolidated return is not required for the taxable year.

(h) *Method of filing return and forms*—(1) *Consolidated return made by common parent corporation*. The consolidated return shall be made on Form 1120 for the group by the common parent corporation. The consolidated return, with Form 851 (affiliations schedule) attached, shall be filed with the district director with whom the common parent would have filed a separate return.

(2) *Filing of Form 1122 for first year*. If, under the provisions of paragraph (a)(1) of this section, a group wishes to exercise its privilege of filing a consolidated return, then a Form 1122 must be executed by each subsidiary and must be attached to the consolidated return for such year. Form 1122 shall not be required for a taxable year if a consolidated return was filed (or was required to be filed) by the group for the immediately preceding taxable year.

(3) *Persons qualified to execute returns and forms*. Each return or form required to be made or prepared by a corporation must be executed by the person authorized under section 6062 to execute returns of separate corporations.

(i) [Reserved]

(j) *Statements and schedules for subsidiaries*. The statement of gross income and deductions and the schedules required by the instructions on the return shall be prepared and filed in columnar form so that the details of the items of gross income, deductions, and credits for each member may be readily audited. Such statements and schedules shall include in columnar form a reconciliation of surplus for each corporation, and a reconciliation of consolidated surplus. Consolidated balance sheets as of the beginning and close of the taxable year of the group, taken from the books of the members, shall accompany the consolidated return and shall be prepared in a form similar to that required for reconciliation of surplus.

(k) *Cross–reference*. See § 1.338(h)(10)–1(d)(7) for special rules regarding filing consolidated returns when a section 338(h)(10) election is made for a target acquired from a selling consolidated group.

[T.D. 6894, 31 FR 11794, Sept. 8, 1966, as amended by T.D. 7016, 34 FR 15556, Oct. 7, 1969; T.D. 7024, 35 FR 2774, Feb. 10, 1970; T.D. 7244, 37 FR 28897, Dec. 30, 1972; T.D. 7246, 38 FR 766, Jan. 4, 1973; T.D. 8438, 57 FR 44333, Sept. 25, 1992; T.D. 8515, 59 FR 2984, Jan. 20, 1994; T.D. 8560, 59 FR 41675, 41700, Aug. 15, 1994; T.D. 8858, 65 FR 1237, Jan. 7, 2000; 66 FR 9929, Feb. 13, 2001]

§ 1.1502–76 Taxable year of members of group.

(a) *Taxable year of members of group*—(1) *Change to parent's taxable year*. The consolidated return of a group must be filed on the basis of the common parent's taxable year, and each subsidiary must adopt the common parent's annual accounting period for the first consolidated return year for which the subsidiary's income is includible in the consolidated return. If any member is on a 52–53-week taxable year, the rule of the preceding sentence shall, with the advance consent of the Commissioner, be deemed satisfied if the taxable years of all members of the group end within the same 7-day period. Any request for such consent shall be filed with the Commissioner of Internal Revenue, Washington, DC 20224, not later than the 30th day before the due date (not including extensions of time) for the filing of the consolidated return.

(2) *Includible insurance company as member of group*. If an includible insurance company required by section 843 to file its return on the basis of a calendar year is a member of the group and if the common parent of such group files its return on the basis of a fiscal year, then the first consolidated return which includes the income of such insurance company may be filed on the basis of the common parent's fiscal year, provided, however, that if such insurance company is a member of the group on the last day of the common parent's taxable year, all members other than such insurance company change to a calendar year or to a 52–53-week taxable year ending within a 7-day period which includes December 31, effective immediately after the close of the common parent's taxable year. If any member changes to a 52–53-week taxable year, the advance consent of the Commissioner shall be obtained in accordance with subparagraph (1) of this paragraph.

(b) *Items included in the consolidated return*—(1) *General rules*—(i) *In general*. A consolidated return must include the common parent's items of income, gain, deduction, loss, and credit for the entire consolidated return year, and each subsidiary's items for the portion of the year for which it is a member. If the consolidated return includes the items of a corporation for only a portion of its tax year determined without taking this section into account, items for the portion of the year not included in the consolidated return must be included in a separate return (including the consolidated return of another group). The rules of this paragraph (b) must be applied to prevent the duplication or elimination of the corporation's items.

(ii) *The day a corporation becomes or ceases to be a member*—(A) *End of the day rule*. (*1*) *In general*. If a corporation (S), other than one described in paragraph (b)(1)(ii)(A)(*2*) of this section, becomes or ceases to be a member during a consolidated return year, it becomes or ceases to be a member at the end of the day on which its status as a member changes, and its tax year ends for all Federal income tax purposes at the end

of that day. Appropriate adjustments must be made if another provision of the Internal Revenue Code or the regulations thereunder contemplates the event occurring before or after S's change in status. For example, S's items restored under § 1.1502–13 immediately before it becomes a nonmember are taken into account in determining the basis of S's stock under § 1.1502–32. On the other hand, if a section 338(g) election is made in connection with S becoming a member, the deemed asset sale under that section takes place before S becomes a member. See § 1.338–10(a)(5) (deemed sale excluded from purchasing corporation's consolidated return.)

(*2*) *Special rule for former S corporations*. If S becomes a member in a transaction other than in a qualified stock purchase for which an election under section 338(g) is made, and immediately before becoming a member an election under section 1362(a) was in effect, then S will become a member at the beginning of the day the termination of its S corporation election is effective. S's tax year ends for all Federal income tax purposes at the end of the preceding day. This paragraph (b)(1)(ii)(A)(*2*) applies to transactions occurring after November 10, 1999.

(B) *Next day rule*. If, on the day of S's change in status as a member, a transaction occurs that is properly allocable to the portion of S's day after the event resulting in the change, S and all persons related to S under section 267(b) immediately after the event must treat the transaction for all Federal income tax purposes as occurring at the beginning of the following day. A determination as to whether a transaction is properly allocable to the portion of S's day after the event will be respected if it is reasonable and consistently applied by all affected persons. In determining whether an allocation is reasonable, the following factors are among those to be considered—

(*1*) Whether income, gain, deduction, loss, and credit are allocated inconsistently (e.g., to maximize a seller's stock basis adjustments under § 1.1502–32);

(*2*) If the item is from a transaction with respect to S stock, whether it reflects ownership of the stock before or after the event (e.g., if a member transfers encumbered land to nonmember S in exchange for additional S stock in a transaction to which section 351 applies and the exchange results in S becoming a member of the consolidated group, the applicability of section 357(c) to the exchange must be determined under § 1.1502–80(d) by treating the exchange as occurring after the event; on the other hand, if S is a member but has a minority shareholder and becomes a nonmember as a result of its redemption of stock with appreciated property, S's gain under section 311 is treated as from a transaction occurring before the event);

(*3*) Whether the allocation is inconsistent with other requirements under the Internal Revenue Code (e.g., if a section 338(g) election is made in connection with a group's acquisition of S, the deemed asset sale must take place before S becomes a member and S's gain or loss with respect to its assets must be taken into account by S as a nonmember) (but see § 1.338–1(d)); and

(*4*) Whether other facts exist, such as a prearranged transaction or multiple changes in S's status, indicating that the transaction is not properly allocable to the portion of S's day after the event resulting in S's change.

(C) *Successor corporations*. For purposes of this paragraph (b)(1)(ii), any reference to a corporation includes a reference to a successor or predecessor as the context may require. A corporation is a successor if the basis of its assets is determined, directly or indirectly, in whole or in part, by reference to the basis of the assets of another corporation (the predecessor). For example, if a member forms S, S is treated as a member from the beginning of its existence.

(iii) *Group structure changes*. If the common parent ceases to be the common parent but the group remains in existence, adjustments must be made in accordance with the principles of § 1.1502–75(d)(2) and (3).

(2) *Determination of items included in separate and consolidated returns*—(i) *In general*. The returns for the years that end and begin with S becoming (or ceasing to be) a member are separate tax years for all Federal income tax purposes. The returns are subject to

the rules of the Internal Revenue Code applicable to short periods, as if S ceased to exist on becoming a member (or first existed on becoming a nonmember). For example, cost recovery deductions under section 168 must be allocated for short periods. On the other hand, annualization under section 443 is not required of S solely because it has a short year as a result of becoming a member. (Similarly, section 443 applies with respect to a consolidated return only to the extent that the group's return is for a short period and section 443 applies without taking this paragraph (b) into account.)

(ii) *Ratable allocation of a year's items*—(A) *Application*. Although the periods ending and beginning with S's change in status are different tax years, items (other than extraordinary items) may be ratably allocated between the periods if—

(*1*) S is not required to change its annual accounting period or its method of accounting as a result of its change in status (e.g., because its stock is sold between consolidated groups that have the same annual accounting periods); and

(*2*) An irrevocable ratable allocation election is made under paragraph (b)(2)(ii)(D) of this section.

(B) *General rule*—(*1*) *Allocation within original year*. Under a ratable allocation election, paragraph (b)(2) of this section applies by allocating to each day of S's original year (S's tax year determined without taking this section into account) an equal portion of S's items taken into account in the original year, except that extraordinary items must be allocated to the day that they are taken into account. All persons affected by the election must take into account S's extraordinary items and the ratable allocation of S's remaining items in a manner consistent with the election.

(*2*) *Items to be allocated*. Under ratable allocation, the items to be allocated and their timing, location, character, and source are generally determined by treating the original year as a single tax year, and the items are not subject to the rules of the Internal Revenue Code applicable to short periods (unless the original year is a short period). However, the years ending and beginning with S's change in status are treated as different tax years (and as short periods) with respect to any item carried to or from these years (e.g., a net operating loss carried under section 172) and with respect to the application of section 481.

(*3*) *Multiple applications*. If this paragraph (b) applies more than once with respect to an original year, adjustments must be made in accordance with the principles of this paragraph (b). For example, if S becomes a member of two different consolidated groups during the same original year and ratable allocation is elected with respect to both groups, ratable allocation is generally determined for both groups by treating the original year as a single tax year; however, if ratable allocation is elected only with respect to the first group, the ratable allocation is determined by treating the original year as a short period that does not include the period that S is a member of the second group. Ratable allocation is not a method of accounting, and ratable allocation with respect to one application of this paragraph (b) to S does not require ratable allocation to be subsequently applied with respect to S.

(C) *Extraordinary items*. An extraordinary item is—

(*1*) Any item from the disposition or abandonment of a capital asset as defined in section 1221 (determined without the application of any other rules of law);

(*2*) Any item from the disposition or abandonment of property used in a trade or business as defined in section 1231(b) (determined without the application of any holding period requirement);

(*3*) Any item from the disposition or abandonment of an asset described in section 1221(1), (3), (4), or (5), if substantially all the assets in the same category from the same trade or business are disposed of or abandoned in one transaction (or series of related transactions);

(*4*) Any item from assets disposed of in an applicable asset acquisition under section 1060(c);

(*5*) Any item carried to or from any portion of the original year (e.g., a net

operating loss carried under section 172), and any section 481(a) adjustment;

(*6*) The effects of any change in accounting method initiated by the filing of the appropriate form after S's change in status;

(*7*) Any item from the discharge or retirement of indebtedness (e.g., cancellation of indebtedness income or a deduction for retirement at a premium);

(*8*) Any item from the settlement of a tort or similar third-party liability;

(*9*) Any compensation-related deduction in connection with S's change in status (including, for example, deductions from bonus, severance, and option cancellation payments made in connection with S's change in status);

(*10*) Any dividend income from a nonmember that S controls within the meaning of section 304 at the time the dividend is taken into account;

(*11*) Any deemed income inclusion from a foreign corporation, or any deferred tax amount on an excess distribution from a passive foreign investment company under section 1291;

(*12*) Any interest expense allocable under section 172(h) to a corporate equity reduction transaction causing this paragraph (b) to apply;

(*13*) Any credit, to the extent it arises from activities or items that are not ratably allocated (e.g., the rehabilitation credit under section 47, which is based on placement in service); and

(*14*) Any item which, in the opinion of the Commissioner, would, if ratably allocated, result in a substantial distortion of income in any consolidated return or separate return in which the item is included.

(D) *Election*. The election to ratably allocate items under this paragraph (b)(2)(ii) must be made in a separate statement entitled ''THIS IS AN ELECTION UNDER § 1.1502–76(b)(2)(ii) TO RATABLY ALLOCATE THE YEAR'S ITEMS OF [insert name and employer identification number of the member].'' The statement must be signed by the member and by the common parent of each affected group, and must be filed with the returns including the items for the year's ending and beginning with S's change in status. If two or more members of the same consolidated group, as a consequence of the same plan or arrangement, cease to be members of that group and remain affiliated as members of another consolidated group, an election under this paragraph (b)(2)(ii)(D) may be made only if it is made by each such member. The statement must provide all of the following:

(*1*) Identify the extraordinary items, their amounts, and the separate or consolidated returns in which they are included.

(*2*) Identify the aggregate amount to be ratably allocated, and the portion of the amount included in the separate and consolidated returns.

(*3*) Include the name and employer identification number of the common parent (if any) of each group that must take the items into account.

(iii) *Ratable allocation of a month's items*. If ratable allocation under paragraph (b)(2)(ii) of this section is not elected (e.g., because S is required to change its annual accounting period), this paragraph (b)(2)(iii) may be applied to ratably allocate only S's items taken into account in the month of its change in status, but only if the allocation is consistently applied by all affected persons. The ratable allocation is made by applying the principles of paragraph (b)(2)(ii) of this section under any reasonable method. For example, S may close its books both at the end of the preceding month and at the end of the month of the change, and allocate only its items (other than extraordinary items) from the month of the change. See paragraph (b)(1)(ii)(B) of this section for factors to be considered in determining whether the method is reasonable.

(iv) *Taxes*. To the extent properly taken into account during the member's tax year (determined without the application of this paragraph (b)), Federal, state, local, and foreign taxes are allocated under paragraph (b)(2) of this section on the basis of the items or activities to which the taxes relate. Thus, income tax is allocated based on the inclusion of the income (determined under the principles of this paragraph (b)) to which the tax relates. For example, if a calendar-year domestic corporation has $100 of foreign source

dividend income (determined in accordance with United States tax accounting principles but without taking this paragraph (b) into account) that is passive income for purposes of section 904, and $60 of the income is allocated under this paragraph (b) to the period of the calendar year after it becomes a member of a consolidated group, then 60% of the corporation's deemed paid foreign tax credit associated with its dividend income for the calendar year is taken into account in computing the group's passive basket consolidated foreign tax credit. Similarly, property taxes relate to the ownership of property and are allocated over the period that the property is owned. This paragraph (b)(2)(iv) applies without regard to any determination or allocation by another taxing jurisdiction.

(v) *Acquisition of S corporation*. If a corporation is acquired in a transaction to which paragraph (b)(1)(ii)(A)(*2*) of this section applies, then paragraphs (b)(2)(ii) and (iii) of this section do not apply and items of income, gain, loss, deduction, and credit are assigned to each short taxable year on the basis of the corporation's normal method of accounting as determined under section 446. This paragraph (b)(2)(v) applies to transactions occurring after November 10, 1999.

(vi) *Passthrough entities*—(A) *In general*. If S is a partner in a partnership or an owner of a similar interest with respect to which items of the entity are taken into account by S, S is treated, solely for purposes of determining the year to which the entity's items are allocated under paragraph (b)(2) of this section, as selling or exchanging its entire interest in the entity immediately before S's change in status.

(B) *Treatment as a conduit*. For purposes of this paragraph (b)(2), if a member (together with other members) would be treated under section 318(a)(2) as owning an aggregate of at least 50% of any stock owned by the passthrough entity, the method that is used to determine the inclusion of the entity's items in the consolidated or separate return must be the same method that is used to determine the inclusion of the member's items in the consolidated or separate return.

(C) *Exception for certain foreign entities*. This paragraph (b)(2)(v) does not apply to any foreign corporation generating the deemed inclusion of income, or to any passive foreign investment company generating a deferred tax amount on an excess distribution under section 1291.

(3) *Anti-avoidance rule*. If any person acts with a principal purpose contrary to the purposes of this paragraph (b), to substantially reduce the Federal income tax liability of any person, adjustments must be made as necessary to carry out the purposes of this section.

(4) *Determination of due date for separate return*. Paragraph (c) of this section contains rules for the filing of the separate return referred to in this paragraph (b). In applying paragraph (c) of this section, the due date for the filing of S's separate return shall also be determined without regard to the ending of the tax year under paragraph (b)(1)(ii) of this section or the deemed cessation of its existence under paragraph (b)(2)(i) of this section.

(5) *Examples*. For purposes of the examples in this paragraph (b), unless otherwise stated, P and X are common parents of calendar-year consolidated groups, P owns all of the only class of T's stock, T owns no stock of lower-tier members, all persons use the accrual method of accounting, the facts set forth the only corporate activity, all transactions are between unrelated persons, tax liabilities are disregarded, and any election required under paragraph (b)(2) of this section is properly made. The principles of this paragraph (b) are illustrated by the following examples.

Example 1. Items allocated between consolidated and separate returns. (a) *Facts*. P and S are the only members of the P group. P sells all of S's stock to individual A on June 30, and therefore S becomes a nonmember on July 1 of Year 2.

(b) *Analysis*. Under paragraph (b)(1) of this section, the P group's consolidated return for Year 2 includes P's income for the entire tax year and S's income for the period from January 1 to June 30, and S must file a separate return for the period from July 1 to December 31.

(c) *Acquisition of another subsidiary before end of tax year*. The facts are the same as in paragraph (a) of this *Example 1*, except that on July 31 P acquires all the stock of T

(which filed a separate return for its year ending on November 30 of Year 1) and T therefore becomes a member on August 1 of Year 2. Under §1.1502–75(d) and paragraph (b)(1) of this section, the P group's consolidated return for Year 2 includes P's income for the entire year, S's income from January 1 to June 30, and T's income from August 1 to December 31. S must file a separate return that includes its income from July 1 to December 31, and T must file a separate return that includes its income from December 1 of Year 1 to July 31 of Year 2. (If P had acquired T after December 31, the P group that included S is a different group from the P group that includes T, and, for example, the P group that includes T must make a separate election under section 1501 and §1.1502–75 if consolidated returns are to be filed.)

Example 2. Group structure change. (a) *Facts.* P owns all of the stock of S and T. Shortly after the beginning of Year 1, P merges into T in a reorganization described in section 368(a)(1)(A) (and in section 368(a)(1)(D)), and P's shareholders receive T's stock in exchange for all of P's stock. The P group is treated under §1.1502–75(d)(2)(ii) as remaining in existence with T as its common parent.

(b) *Analysis.* Under paragraph (b)(1) of this section, the P group's return must include the common parent's items for the entire consolidated return year and, if the common parent ceases to be the common parent but the group remains in existence, appropriate adjustments must be made. Consequently, although P did not exist for all of Year 1, P's items for the portion of Year 1 ending with the merger are treated as the items of the common parent that must be included in the P group's return for Year 1.

(c) *Reverse acquisition.* Assume instead that X acquires all of P's assets in exchange for more than 50% of X's stock in a reorganization described in section 368(a)(1)(D). The reorganization constitutes a reverse acquisition under §1.1502–75(d)(3), with the X group terminating and the P group surviving with X as its common parent. Consequently, P's items for the portion of Year 1 ending with the acquisition are treated as the items of the common parent that must be included in the P group's return for Year 1, and X's items are treated for purposes of paragraph (b)(1) of this section as the items of a subsidiary included in the P group's return for the portion of Year 1 for which X is a member.

Example 3. Ratable allocation. (a) *Facts.* P sells all of T's stock to X, and T becomes a nonmember on July 1 of Year 1. T engages in the production and sale of merchandise throughout Year 1 and is required to use inventories. The sale is treated as causing T's tax year to end on June 30, and the periods beginning and ending with the sale are treated as two tax years for Federal income tax purposes.

(b) *Analysis.* If ratable allocation under paragraph (b)(2)(ii) of this section is not elected, T must perform an inventory valuation as of the acquisition and also as of the end of Year 1. If ratable allocation is elected, T must perform an inventory valuation only as of the close of Year 1, and T's income from inventory is ratably allocated, along with T's other items that are not extraordinary items, between the P and X consolidated returns.

(c) *Merger into nonmember.* Assume instead that T merges into a wholly owned subsidiary of X in a reorganization described in section 368(a)(2)(D), and P receives 10% of X's stock in exchange for all of T's stock. Under paragraph (b)(2)(ii)(B) of this section, because T's tax year ends on June 30 under section 381(b)(1), T's original year determined without taking paragraph (b) of this section into account also ends on June 30. Consequently, a ratable allocation under paragraph (b)(2)(ii) of this section is the same as an allocation based on closing the books.

Example 4. Net operating loss. P sells all of T's stock to X, T becomes a nonmember on June 30 of Year 1, and ratable allocation under paragraph (b)(2)(ii) of this section is elected. Under ratable allocation, the X group has a $100 consolidated net operating loss for Year 1, all of which is attributable to T. However, because of extraordinary items, T has $100 of income for the portion of Year 1 that T is a member of the P group. Under paragraph (b)(2)(ii)(B)(*2*) of this section, T's loss may be carried back from the X group to the portion of Year 1 that T was a member of the P group. See also section 172 and §1.1502–21(b). Under paragraph (b)(2)(ii)(C)(*5*) of this section, any item carried to or from any portion of the original year is an extraordinary item, and the loss therefore is not taken into account again in determining the ratable allocation under paragraph (b)(2)(ii) of this section.

Example 5. Employee benefit plans. (a) *Facts.* P sells all of T's stock to X, and T becomes a nonmember on June 30 of Year 1. On March 15 of Year 2, T contributes $100 to its retirement plan, which is a qualified plan under section 401(a). T is not required to make quarterly contributions to the plan for Year 1 under section 412(m). The contribution is made on account of T's taxable period beginning on July 1 of Year 1, and is deemed in accordance with section 404(a)(6) to have been made on the last day of T's taxable period beginning on July 1 of Year 1. Ratable allocation under paragraph (b)(2)(ii) of this section is not elected.

(b) *Analysis.* Under paragraph (b) of this section, the sale is treated as causing T's tax year to end on June 30, and the period beginning on July 1 is treated as a separate annual accounting period for all Federal income tax purposes. T's income from January 1 to June 30 is included in the P group's Year

1 return, and T's income from July 1 to December 31 is included in the X group's Year 1 return. Thus, the $100 contribution is deductible by T for the period of Year 1 that it is a member of the X group, subject to the applicable limitations of section 404, if a contribution on the last day of that period would otherwise be deductible.

(c) The facts are the same as in paragraph (a) of this *Example 5*, except that, in accordance with section 404(a)(6), $40 of the $100 contribution is made on account of T's taxable period beginning on January 1 of Year 1 and is deemed to be made on the last day of T's taxable period beginning on January 1 of Year 1. The remaining $60 is made on account of T's taxable period beginning on July 1 of Year 1 and is deemed to be made on the last day of T's taxable period beginning on July 1 of Year 1. As in paragraph (b) of this *Example 5*, under paragraph (b) of this section, the sale is treated as causing T's tax year to end on June 30, and the period beginning on July 1 is treated as a separate annual accounting period for all Federal income tax purposes. The $40 portion of the contribution is deductible by T for the period of Year 1 that it is a member of the P group, subject to the applicable limitations of section 404 and provided that a $40 contribution on the last day of that period would otherwise be deductible for that period, and the $60 portion is deductible by T for the period of Year 1 that it is a member of the X group, subject to the same conditions.

(d) *Ratable allocation*. The facts are the same as in paragraph (a) of this *Example 5*, except that P, T, and X elect ratable allocation under paragraph (b)(2)(ii) of this section and T's deduction for the retirement plan contribution is not an extraordinary item. T's deduction may be ratably allocated, subject to the applicable limitations of section 404, and is allowable only if a contribution on the last day of Year 1 otherwise would be deductible for any period in the year. (The results would be the same if S were an unaffiliated corporation when acquired by X, and the due date of its last separate return (including extensions) were before the pension contribution was made on March 15 of Year 2.)

Example 6. Allocation of partnership items. (a) *Facts*. P sells all of T's stock to X, and T becomes a nonmember on June 30 of Year 1. T has a 10% interest in the capital and profits of a calendar-year partnership.

(b) *Analysis*. Under paragraph (b)(2)(vi)(A) of this section, T is treated, solely for purposes of determining T's tax year in which the partnership's items are included, as selling or exchanging its entire interest in the partnership as of P's sale of T's stock. Thus, the deemed disposition is not taken into account under section 708, it does not result in gain or loss being recognized by T, and T's holding period is unaffected. However, under section 706(a), in determining T's income, T is required to include its distributive share of partnership items for the partnership's year ending within or with T's tax year. Under section 706(c)(2), the partnership's tax year is treated as closing with respect to T for this purpose as of P's sale of T's stock. The allocation of T's distributive share of partnership items must be made under § 1.706–1(c)(2)(ii).

(c) *Controlled partnership*. The facts are the same as in paragraph (a) of this *Example 6*, except that T has a 75% interest in the capital and profits of the partnership. Under paragraph (b)(2)(vi)(B) of this section, T's distributive share of the partnership items is treated as T's items for purposes of paragraph (b)(2) of this section. Thus, if ratable allocation under paragraph (b)(2)(ii) of this section is not elected, T's distributive share of the partnership's items must be determined under § 1.706–1(c)(2)(ii) by an interim closing of the partnership's books. Similarly, if ratable allocation is elected for T's items that are not extraordinary items, T's distributive share of the partnership's nonextraordinary items must also be ratably allocated under § 1.706–1(c)(2)(ii).

Example 7. Acquisition of S corporation. (a) *Facts*. Z is a small business corporation for which an election under section 1362(a) was in effect at all times since Year 1. At all times, Z had only 100 shares of stock outstanding, all of which were owned by individual A. On July 1 of Year 3, P acquired all of the Z stock. P does not make an election under section 338(g) with respect to its purchase of the Z stock.

(b) *Analysis*. As a result of P's acquisition of the Z stock, Z's election under section 1362(a) terminates. See sections 1361(b)(1)(B) and 1362(d)(2). Z is required to join in the filing of the P consolidated return. See § 1.1502–75. Z's tax year ends for all Federal income tax purposes on June 30 of Year 3. If no extension of time is sought, Z must file a separate return for the period from January 1 through June 30 of Year 3 on or before March 15 of Year 4. See paragraph (b)(4) of this section. Z will become a member of the P consolidated group as of July 1 of Year 3. See paragraph (b)(1)(ii)(A)(*2*) of this section. P group's Year 3 consolidated return will include Z's items from July 1 to December 31 of Year 3.

(6) *Effective date*—(i) *General rule*. Except as provided in paragraphs (b)(1)(ii)(A)(2) and (b)(2)(v) of this section, this paragraph (b) applies to corporations becoming or ceasing to be members of consolidated groups on or after January 1, 1995.

(ii) *Prior law*. For prior transactions, see prior regulations under section 1502

as in effect with respect to the transaction. See, e.g., § 1.1502–76(b) and (d) as contained in the 26 CFR part 1 edition revised as of April 1, 1994. However, § 1.1502–76(b)(5) and (6) as contained in the 26 CFR part 1 edition revised as of April 1, 1994 do not apply with respect to corporations becoming or ceasing to be members of consolidated groups on or after January 1, 1995. If both this paragraph (b) and prior law may apply to determine the inclusion of any amount in a return, appropriate adjustments must be made to prevent the omission or duplication of the amount.

(c) *Time for making separate returns for periods not included in consolidated return*—(1) *Consolidated return filed by due date for separate return.* If the group has filed a consolidated return on or before the due date for the filing of a subsidiary's separate return (including extensions of time and determined without regard to any change of its taxable year required under paragraph (a) of this section), then the separate return for any portion of the subsidiary's taxable year for which its income is not included in the consolidated return of the group must be filed no later than the due date of such consolidated return (including extensions of time).

(2) *Consolidated return not filed by due date for separate return.* If the group has not filed a consolidated return on or before the due date for the filing of a subsidiary corporation's separate return (including extensions of time and determined without regard to any change of its taxable year required under paragraph (a) of this section), then on or before such due date such subsidiary shall file a separate return either for the portion of its taxable year for which its income would not be included in a consolidated return if such a return were filed, or for its complete taxable year. However, if a separate return is filed for such portion of its taxable year and the group subsequently does not file a consolidated return, such subsidiary corporation shall file a substituted return for its complete taxable year not later than the due date (including extensions of time) prescribed for the filing of the common parent's return. On the other hand, if the return is filed for the subsidiary's complete taxable year and the group later files a consolidated return, such subsidiary must file an amended return not later than the due date (including extensions of time) for the filing of the consolidated return of the group. Such amended return shall be for that portion of such subsidiary's taxable year which is not included in the consolidated return. If, under this subparagraph, a substituted return must be filed, then the return previously filed shall not be considered a return within the meaning of section 6011. If, under this subparagraph, a substituted or amended return must be filed, then, for purposes of sections 6513(a) and 6601(a), the last date prescribed for payment of tax shall be the due date (not including extensions of time) for the filing of the subsidiary's separate return (determined without regard to this subparagraph and without regard to any change of its taxable year required under paragraph (a) of this section).

(3) *Examples.* The provisions of this paragraph may be illustrated by the following examples:

Example (1). Corporation P, which filed a separate return for the calendar year 1966, acquires all of the stock of corporation S as of the close of December 31, 1966. Corporation S reports its income on the basis of a fiscal year ending March 31. On June 15, 1967, the due date for the filing of a separate return by S (assuming no extensions of time), a consolidated return has not been filed for the group (P and S). On such date S may either file a return for the period April 1, 1966, through December 31, 1966, or it may file a return for the complete fiscal year ending March 31, 1967. If S files a return for the short period ending December 31, 1966, and if the group elects not to file a consolidated return for the calendar year 1967, S, on or before March 15, 1968 (the due date of P's return, assuming no extensions of time), must file a substituted return for the complete fiscal year ending March 31, 1967, in lieu of the return previously filed for the short period. Interest is computed from June 15, 1967. If, however, S files a return for the complete fiscal year ending March 31, 1967, and the group elects to file a consolidated return for the calendar year 1967, then S must file an amended return covering the period from April 1, 1966, through December 31, 1966, in lieu of the return previously filed for the complete fiscal year. Interest is computed from June 15, 1967.

Example (2). Assume the same facts as in example (1) except that corporation P acquires all of the stock of corporation S at the close of September 30, 1967, and that P

files a consolidated return for the group for 1967 on March 15, 1968 (not having obtained any extensions of time). Since a consolidated return has been filed on or before the due date (June 15, 1968) for the filing of the separate return for the taxable year ending March 31, 1968, the return of S for the short taxable year beginning April 1, 1967, and ending September 30, 1967, should be filed no later than March 15, 1968.

[T.D. 6894, 31 FR 11794, Sept. 8, 1966, as amended by T.D. 7244, 37 FR 28897, Dec. 30, 1972; T.D. 7246, 38 FR 766, Jan. 4, 1973; T.D. 8560, 59 FR 41700, Aug. 15, 1994; T.D. 8560, 62 FR 12098, Mar. 14, 1997; T.D. 8842, 64 FR 61205, Nov. 10, 1999; T.D. 8858, 65 FR 1237, Jan. 7, 2000; T.D. 8940, 66 FR 9929, 9957, Feb. 13, 2001]

§ 1.1502–77 Common parent agent for subsidiaries.

(a) *Scope of agency of common parent corporation*. The common parent, for all purposes (other than the making of the consent required by paragraph (a)(1) of § 1.1502–75, the making of an election under section 936(e), the making of an election to be treated as a DISC under § 1.992–2, and a change of the annual accounting period pursuant to paragraph (b)(3)(ii) of § 1.991–1) shall be the sole agent for each subsidiary in the group, duly authorized to act in its own name in all matters relating to the tax liability for the consolidated return year. Except as provided in the preceding sentence, no subsidiary shall have authority to act for or to represent itself in any such matter. For example, any election available to a subsidiary corporation in the computation of its seperate taxable income must be made by the common parent, as must any change in an election previously made by the subsidiary corporation; all correspondence will be carried on directly with the common parent; the common parent shall file for all extensions of time including extensions of time for payment of tax under section 6164; notices of deficiencies will be mailed only to the common parent, and the mailing to the common parent shall be considered as a mailing to each subsidiary in the group; notice and demand for payment of taxes will be given only to the common parent and such notice and demand will be considered as a notice and demand to each subsidiary; the common parent will file petitions and conduct proceedings before the Tax Court of the United States, and any such petition shall be considered as also having been filed by each such subsidiary. The common parent will file claims for refund or credit, and any refund will be made directly to and in the name of the common parent and will discharge any liability of the Government in respect thereof to any such subsidiary; and the common parent in its name will give waivers, give bonds, and execute closing agreements, offers in compromise, and all other documents, and any waiver or bond so given, or agreement, offer in compromise, or any other document so executed, shall be considered as having also been given or executed by each such subsidiary. Notwithstanding the provisions of this paragraph, any notice of deficiency, in respect of the tax for a consolidated return year, will name each corporation which was a member of the group during any part of such period (but a failure to include the name of any such member will not affect the validity of the notice of deficiency as to the other members); any notice and demand for payment will name each corporation which was a member of the group during any part of such period (but a failure to include the name of any such member will not affect the validity of the notice and demand as to the other members); and any levy, any notice of a lien, or any other proceeding to collect the amount of any assessment, after the assessment has been made, will name the corporation from which such collection is to be made. The provisions of this paragraph shall apply whether or not a consolidated return is made for any subsequent year, and whether or not one or more subsidiaries have become or have ceased to be members of the group at any time. Notwithstanding the provisions of this paragraph, the district director may, upon notifying the common parent, deal directly with any member of the group in respect of its liability, in which event such member shall have full authority to act for itself.

(b) *Notification of deficiency to corporation which has ceased to be a member of the group*. If a subsidiary has ceased to be a member of the group and if such subsidiary files written notice of such cessation with the district director with whom the consolidated return is

filed, then such district director upon request of such subsidiary will furnish it with a copy of any notice of deficiency in respect of the tax for a consolidated return year for which it was a member and a copy of any notice and demand for payment of such deficiency. The filing of such written notification and request by a corporation shall not have the effect of limiting the scope of the agency of the common parent provided for in paragraph (a) of this section and a failure by such district director to comply with such written request shall not have the effect of limiting the tax liability of such corporation provided for in § 1.1502–6.

(c) *Effect of waiver given by common parent.* Unless the district director agrees to the contrary, an agreement entered into by the common parent extending the time within which an assessment may be made or levy or proceeding in court begun in respect of the tax for a consolidated return year shall be applicable:

(1) To each corporation which was a member of the group during any part of such taxable year, and

(2) To each corporation the income of which was included in the consolidated return for such taxable year, notwithstanding that the tax liability of any such corporation is subsequently computed on the basis of a separate return under the provisions of § 1.1502–75.

(d) *Effect of dissolution of common parent corporation.* If the common parent corporation contemplates dissolution, or is about to be dissolved, or if for any other reason its existence is about to terminate, it shall forthwith notify the district director with whom the consolidated return is filed of such fact and designate, subject to the approval of such district director, another member to act as agent in its place to the same extent and subject to the same conditions and limitations as are applicable to the common parent. If the notice thus required is not given by the common parent, or the designation is not approved by the district director, the remaining members may, subject to the approval of such district director, designate another member to act as such agent, and notice of such designation shall be given to such district director. Until a notice in writing designating a new agent has been approved by such district director, any notice of deficiency or other communication mailed to the common parent shall be considered as having been properly mailed to the agent of the group; or, if such district director has reason to believe that the existence of the common parent has terminated, he may, if he deems it advisable, deal directly with any member in respect of its liability.

(e) *Cross-references*—(1) *Alternative agents.* For rules relating to alternative agents of the group, see § 1.1502–77.

(2) *Groups that include insolvent financial institutions.* For further rules applicable to groups that include insolvent financial institutions, see § 301.6402–7 of this chapter.

[T.D. 6894, 31 FR 11794, Sept. 8, 1966, as amended by T.D. 7323, 39 FR 34409, Sept. 25, 1974; T.D. 7673, 45 FR 8588, Feb. 8, 1980; T.D. 8226, 53 FR 34733, Sept. 8, 1988; T.D. 8446, 57 FR 53034, Nov. 6, 1992]

§ 1.1502–77T Alternative agents of the group (temporary).

(a) *General rules*—(1) *Scope.* This section applies if the corporation that is the common parent of the group ceases to be the common parent, whether or not the group remains in existence under § 1.1502–75(d).

(2) *Notice of deficiency.* A notice of deficiency mailed to any one or more corporations referred to in paragraph (a)(4) of this section is deemed for purposes of § 1.1502–77 to be mailed to the agent of the group. If the group has designated an agent that has been approved by the district director under § 1.1502–77(d), a notice of deficiency shall be mailed to that designated agent in addition to any other corporation referred to in paragraph (a)(4) of this section. However, failure by the district director to mail a notice of deficiency to that designated agent shall not invalidate the notice of deficiency mailed to any other corporation referred to in paragraph (a)(4) of this section.

(3) *Waiver of statute of limitations.* A waiver of the statute of limitations with respect to the group given by any one or more corporations referred to in paragraph (a)(4) of this section is

deemed to be given by the agent of the group.

(4) *Alternative agents*. The corporations referred to in paragraph (a) (2) and (3) of this section are—

(i) The common parent of the group for all or any part of the year to which the notice or waiver applies,

(ii) A successor to the former common parent in a transaction to which section 381(a) applies,

(iii) The agent designated by the group under § 1.1502–77(d), or

(iv) If the group remains in existence under § 1.1502–75(d) (2) or (3), the common parent of the group at the time the notice is mailed or the waiver given.

(b) *Effective date*. Paragraph (a) of this section applies to statutory notices and waivers of the statute of limitations for taxable years for which the due date (without extensions) of the consolidated return is after September 7, 1988.

[T.D. 8226, 53 FR 34733, Sept. 8, 1988]

§ 1.1502–78 Tentative carryback adjustments.

(a) *General rule*. If a group has a consolidated net operating loss, a consolidated net capital loss, or a consolidated unused investment credit for any taxable year, then any application under section 6411 for a tentative carryback adjustment of the taxes for a consolidated return year or years preceding such year shall be made by the common parent corporation to the extent such loss or unused investment credit is not apportioned to a corporation for a separate return year pursuant to §§ 1.1502–21(b), 1.1502–22(b), or 1.1502–79(c) (or §§ 1.1502–79A(a), 1.1502–79A(b), or 1.1502–79(c), as appropriate. In the case of the portion of a consolidated net operating loss or consolidated net capital loss or consolidated unused investment credit to which the preceding sentence does not apply, and in the case of a net capital or net operating loss or unused investment credit arising in a separate return year which may be carried back to a consolidated return year, the corporation or corporations to which any such loss or credit is attributable shall make any application under section 6411.

(b) *Special rules*—(1) *Payment of refund*. Any refund allowable under an application referred to in paragraph (a) of this section shall be made directly to and in the name of the corporation filing the application, except that in all cases where a loss is deducted from the consolidated taxable income or a credit is allowed in computing the consolidated tax liability for a consolidated return year, any refund shall be made directly to and in the name of the common parent corporation. The payment of any such refund shall discharge any liability of the Government with respect to such refund.

(2) *Several liability*. If a group filed a consolidated return for a taxable year for which there was an adjustment by reason of an application under section 6411, and if a deficiency is assessed against such group under section 6213(b)(2), then each member of such group shall be severally liable for such deficiency including any interest or penalty assessed in connection with such deficiency.

(3) *Groups that include insolvent financial institutions*. For further rules applicable to groups that include insolvent financial institutions, see § 301.6402–7 of this chapter.

(c) *Examples*. The provisions of paragraphs (a) and (b) of this section may be illustrated by the following examples:

Example (1). Corporations P, S, and S–1 filed a consolidated return for the calendar year 1966. P, S, and S–1 also filed a consolidated return for the calendar year 1969. The group incurred a consolidated net operating loss in 1969 attributable to S–1 which may be carried back to 1966 as a consolidated net operating loss carryback. If a tentative carryback adjustment is desired, P, the common parent, must file an application under section 6411 and any refund will be made to P.

Example (2). Assume the same facts as in example (1) except that P, S, and S–1 filed separate returns for the calendar year 1969, even though they were members of the same group for such year. S–1 incurred a net operating loss in 1969 which may be carried back to 1966. If a tentative carryback adjustment is desired, S–1 must file an application under section 6411 and any refund from such application will be made to P.

Example (3). Corporations X, Y, and Z filed a consolidated return for the calendar year 1966. Z ceased to be a member of the group in 1967. Z filed a separate return for 1968 while

X and Y filed a consolidated return for such year. The group incurred a consolidated net operating loss in 1968 attributable to Y, which may be carried back to 1966. Z also incurred a net operating loss for 1968 which may be carried back to 1966. If a tentative carryback adjustment is claimed with respect to the consolidated net operating loss, X, the common parent, must file an application under section 6411. If a tentative carryback adjustment is desired with respect to Z's loss, Z must file an application. Any refunds attributable to either application will be made to X. If an assessment is made under section 6213(b)(2) to recover an excessive tentative allowance made with respect to calendar year 1966, X, Y, and Z are severally liable for such assessment.

Example (4). Corporations L and M filed a consolidated return for the calendar year 1966. Corporation N filed a separate return for such year. Later, N became a member of the group and filed a consolidated return with the group for the calendar year 1968. The group incurred a consolidated net operating loss in 1968 attributable to N which may be carried back to N's separate return for 1966. If a tentative carryback adjustment is desired, N must file an application under section 6411 and any refund will be made directly to N.

(d) *Adjustments of overpayments of estimated income tax.* If a group paid its estimated income tax on a consolidated basis, then any application under section 6425 for an adjustment of overpayment of estimated income tax shall be made by the common parent corporation. If the members of a group paid estimated income taxes on a separate basis, then any application under section 6425 shall be made by the member of the group which claims an overpayment on a separate basis. Any refund allowable under an application under section 6425 shall be made directly to and in the name of the corporation filing the application.

[T.D. 6894, 31 FR 11794, Sept. 3, 1966, as amended by T.D. 7059, 35 FR 14546, Sept. 17, 1970; T.D. 7246, 38 FR 767, Jan. 4, 1973; T.D. 8387, 56 FR 67489, Dec. 31, 1991; T.D. 8446, 57 FR 53034, Nov. 6, 1992; T.D. 8677, 61 FR 33324, June 27, 1996; T.D. 8823, 64 FR 36100, July 2, 1999]

§ 1.1502–78T Rules for filing applications for tentative carryback adjustments.

(a) through (f) [Reserved]. For further guidance, see § 1.1502–78(a) through (f).

(g) *Time for filing application*—(1) *General rule.* The provisions of section 6411(a) apply to the filing of an application for a tentative carryback adjustment by a consolidated group.

(2) *Special rule for new members*—(i) *New member.* A new member is a corporation that, in the preceding taxable year, did not qualify as a member, as defined in § 1.1502–1(b), of the consolidated group that it now joins.

(ii) *End of taxable year.* Solely for the purpose of complying with the twelve-month requirement for making an application for a tentative carryback adjustment under section 6411(a), the separate return year of a qualified new member shall be treated as ending on the same date as the end of the current taxable year of the consolidated group that the qualified new member joins.

(iii) *Qualified new member.* A new member of a consolidated group qualifies for purposes of the provisions of this paragraph (g)(2), if immediately prior to becoming a new member, either—

(A) It was the common parent of a consolidated group; or

(B) It was not required to join in the filing of a consolidated return.

(iv) *Examples.* The provisions of this paragraph (g)(2) may be illustrated by the following examples:

Example 1. Individual A owns 100 percent of the stock of X, a corporation filing returns on a calendar year basis. On January 31 of year 1, X becomes a member of the Y consolidated group, which also files returns on a calendar year basis. X is a qualified new member as defined in paragraph (g)(2)(iii)(B) of this section because, immediately prior to becoming a new member of the Y consolidated group, X was not required to join in the filing of a consolidated return. As a result of its becoming a new member of Group Y, X's separate return for the short taxable year (January 1 of year 1 through January 31 of year 1) is due September 15 of year 2 (with extensions). Section 1.1502–76(c). Group Y's consolidated return is also due September 15 of year 2 (with extensions). Section 1.1502–76(c). Solely for the purpose of complying with the twelve-month requirement for making an application for a tentative carryback adjustment under Section 6411(a), X's taxable year for the separate return year is treated as ending on December 31 of year 1. X's application for a tentative carryback adjustment is therefore due on or before December 31 of year 2.

Example 2. Assume the same facts as in *Example 1* except that immediately prior to becoming a new member of Group Y, X was a member of the Z consolidated group. Because X was required to join in the filing of the consolidated return for Group Z, X is not a qualified new member as defined in paragraph (g)(2)(iii) of this section. X's items for the one-month period will be included in the consolidated return for Group Z. Group Z's application for a tentative carryback adjustment, if any, continues to be due within 12 months of the end of its taxable year, which is not affected by X's change in status as a new member of Group Y.

(v) *Effective date.* The provisions of this paragraph (g)(2) apply for applications by new members of consolidated groups for tentative carryback adjustments resulting from net operating losses, net capital losses, or unused business credits arising in separate return years of new members that begin on or after January 1, 2001.

[T.D. 8919, 66 FR 715, Jan. 4, 2001]

§ 1.1502–79 Separate return years.

(a) *Carryover and carryback of consolidated net operating losses to separate return years.* For losses arising in consolidated return years beginning before January 1, 1997, see § 1.1502–79A(a). For later years, see § 1.1502–21(b).

(b) *Carryover and carryback of consolidated net capital loss to separate return years.* For losses arising in consolidated return years beginning before January 1, 1997, see § 1.1502–79A(b). For later years, see § 1.1502–22(b).

(c) *Carryover and carryback of consolidated unused investment credit to separate return years*—(1) *In general.* If a consolidated unused investment credit can be carried under the principles of section 46(b) and paragraph (b) of § 1.1502–3 to a separate return year of a corporation (or could have been so carried if such corporation were in existence) which was a member of the group in the year in which such unused credit arose, then the portion of such consolidated unused credit attributable to such corporation (as determined under subparagraph (2) of this paragraph) shall be apportioned to such corporation (and any successor to such corporation in a transaction to which section 381(a) applies) under the principles of § 1.1502–21(b) (or §§ 1.1502–79A(a)(1) and (2), as appropriate) and shall be an investment credit carryover or carryback to such separate return year.

(2) *Portion of consolidated unused investment credit attributable to a member*—(i) *Investment credit carryback.* In the case of a consolidated unused credit which is an investment credit carryback, the portion of such consolidated unused credit attributable to a member of the group is an amount equal to such consolidated unused credit multiplied by a fraction, the numerator of which is the credit earned of such member for the consolidated unused credit year, and the denominator of which is the consolidated credit earned for such unused credit year.

(ii) *Investment credit carryover.* In the case of a consolidated unused credit which is an investment credit carryover, the portion of such consolidated unused credit attributable to a member of the group is an amount equal to such consolidated unused credit multiplied by a fraction, the numerator of which is the credit earned with respect to any section 38 property placed in service in the consolidated unused credit year and owned by such member (whether or not placed in service by such member) at the close of the last day as of which the taxable income of such member is included in a consolidated return filed by the group, and the denominator of which is the consolidated credit earned for such unused credit year.

(d) *Carryover and carryback of consolidated unused foreign tax*—(1) *In general.* If a consolidated unused foreign tax can be carried under the principles of section 904(d) and paragraph (e) of § 1.1502–4 to a separate return year of a corporation (or could have been so carried if such corporation were in existence) which was a member of the group in the year in which such unused foreign tax arose, then the portion of such consolidated unused foreign tax attributable to such corporation (as determined under subparagraph (2) of this paragraph) shall be apportioned to such corporation (and any successor to such corporation in a transaction to which section 381(a) applies) under the principles of § 1.1502–21(b) (or §§ 1.1502–79A(a)(1) and (2), as appropriate) and shall be deemed paid or accrued in such

separate return year to the extent provided in section 904(d).

(2) *Portion of consolidated unused foreign tax attributable to a member.* The portion of a consolidated unused foreign tax for any year attributable to a member of a group is an amount equal to such consolidated unused foreign tax multipled by a fraction, the numerator of which is the foreign taxes paid or accrued for such year (including those taxes deemed paid or accrued, other than by reason of section 904(d)) to each foreign country or possession (or to all foreign countries or possessions if the overall limitation is effective) by such member, and the denominator of which is the aggregate of all such taxes paid or accrued for such year (including those taxes deemed paid or accrued, other than by reason of section 904(d)) to each such foreign country or possession (or to all foreign countries or possessions if the overall limitation is effective) by all the members of the group.

(e) *Carryover of consolidated excess charitable contributions to separate return years*—(1) *In general.* If the consolidated excess charitable contributions for any taxable year can be carried under the principles of section 170(b)(2) and paragraph (b) of § 1.1502–24 to a separate return year of a corporation (or could have been so carried if such corporation were in existence) which was a member of the group in the year in which such excess contributions arose, then the portion of such consolidated excess charitable contributions attributable to such corporation (as determined under subparagraph (2) of this paragraph) shall be apportioned to such corporation (and any successor to such corporation in a transaction to which section 381(a) applies) under the principles of § 1.1502–21(b) (or §§ 1.1502–79A(a)(1) and (2), as appropriate) and shall be a charitable contribution carryover to such separate return year.

(2) *Portion of consolidated excess charitable contributions attributable to a member.* The portion of the consolidated excess charitable contributions attributable to a member of a group is an amount equal to such consolidated excess contributions multiplied by a fraction, the numerator of which is the charitable contributions paid by such member for the taxable year, and the denominator of which is the aggregate of all such charitable contributions paid for such year by all the members of the group.

[T.D. 6894, 31 FR 11794, Sept. 8, 1966, as amended by T.D. 7728, 45 FR 72650, Nov. 3, 1980; T.D. 8294, 55 FR 9438, Mar. 14, 1990; T.D. 8319, 55 FR 49038, Nov. 26, 1990; T.D. 8364, 56 FR 47402, Sept. 19, 1991; T.D. 8597, 60 FR 36710, July 18, 1995; T.D. 8677, 61 FR 33324, 33325, 33334, June 27, 1996; T.D. 8823, 64 FR 36100, July 2, 1999]

§ 1.1502–80 Applicability of other provisions of law.

(a) *In general.* The Internal Revenue Code, or other law, shall be applicable to the group to the extent the regulations do not exclude its application. Thus, for example, in a transaction to which section 381(a) applies, the acquiring corporation will succeed to the tax attributes described in section 381(c). Furthermore, sections 269 and 482 apply for any consolidated year. Section 304 applies except as provided in paragraph (b) of this section.

(b) *Non-applicability of section 304.* Section 304 does not apply to any acquisition of stock of a corporation in an intercompany transaction or to any intercompany item from such transaction occurring on or after July 24, 1991.

(c) *Deferral of section 165.* For consolidated return years beginning on or after January 1, 1995, stock of a member is not treated as worthless under section 165 before the stock is treated as disposed of under the principles of § 1.1502–19(c)(1)(iii). See §§ 1.1502–11(c) and 1.1502–20 for additional rules relating to stock loss.

(d) *Non-applicability of section 357(c)*—(1) *In general.* Section 357(c) does not apply to any transaction to which § 1.1502–13, § 1.1502–13T, § 1.1502–14, or § 1.1502–14T applies, if it occurs in a consolidated return year beginning on or after January 1, 1995. For example, P, S, and T are members of a consolidated group, P owns all of the stock of S and T with bases of $30 and $20, respectively, S has a $30 basis in its assets and $40 of liabilities, and S merges into T in a transaction described in section 368(a)(1)(A) (and in section 368(a)(1)(D)); section 357(c) does not apply to the merger, P's basis in T's

stock increases to $50 ($30 plus $20), and T succeeds to S's $30 basis in the assets transferred subject to the $40 liability. Similarly, if S instead transferred its assets and liabilities to a newly formed subsidiary in a transaction to which section 351 applies, section 357(c) does not apply and S's basis in the subsidiary's stock is a $10 excess loss account. This paragraph (d) does not apply to a transaction if the transferor or transferee becomes a nonmember as part of the same plan or arrangement. The transferor (or transferee) is treated as becoming a nonmember once it is no longer a member of a consolidated group that includes the transferee (or transferor). For purposes of this paragraph (d), any reference to a transferor or transferee includes, as the context may require, a reference to a successor or predecessor.

(2) *Prior period transactions*. If, in a tax year beginning before January 1, 1995, a member's stock with an excess loss account is transferred in a transaction to which §1.1502–13, §1.1502–13T, §1.1502–14, or §1.1502–14T applies, paragraph (d)(1) of this section applies to the stock transfer to the extent that the income, gain, deduction, or loss (if any) is not taken into account in a tax year beginning before January 1, 1995. For example, if P, S, and T, are members of a consolidated group, T's stock has an excess loss account, and P transfers the T stock to S in 1993 in a transaction to which section 351 and §1.1502–13 apply, section 357(c) applies to the transfer only to the extent P's gain is taken into account in tax years beginning before January 1, 1995.

(e) *Non-applicability of section 163(e)(5)*. Section 163(e)(5) does not apply to any intercompany obligation (within the meaning of §1.1502–13(g)) issued in a consolidated return year beginning on or after July 12, 1995.

(f) *Non-applicability of section 1031*. Section 1031 does not apply to any intercompany transaction occurring in consolidated return years beginning on or after July 12, 1995.

[T.D. 8402, 57 FR 9385, Mar. 18, 1992, as amended by T.D. 8560, 59 FR 41703, Aug. 15, 1994; T.D. 8597, 60 FR 36710, July 18, 1995; T.D. 8677, 61 FR 33325, June 27, 1996; T.D. 8597, 62 FR 12098, Mar. 14, 1997]

§ 1.1502–81T Alaska Native Corporations.

(a) *General Rule*. The application of section 60(b)(5) of the Tax Reform Act of 1984 and section 1804(e)(4) of the Tax Reform Act of 1986 (relating to Native Corporations established under the Alaska Native Claims Settlement Act (43 U.S.C. 1601 *et seq.*)) is limited to the use on a consolidated return of losses and credits of a Native Corporation, and of a corporation all of whose stock is owned directly by a Native Corporation, during any taxable year (beginning after the effective date of such sections and before 1992), or any part thereof, against the income and tax liability of a corporation affiliated with the Native Corporation. Thus, no other tax saving, tax benefit, or tax loss is intended to result from the application of section 60(b)(5) of the Tax Reform Act of 1984 and section 1804(e)(4) of the Tax Reform Act of 1986 to any person (whether or not such person is a member of an affiliated group of which a Native Corporation is the common parent). In particular, except as approved by the Secretary, no positive adjustment under §1.1502–32(b) will be made with respect to the basis of stock of a corporation that is affiliated with a Native Corporation through application of section 60(b)(5) of the Tax Reform Act of 1984 and section 1804(e)(4) of the Tax Reform Act of 1986.

(b) *Effective Dates*. This section applies to taxable years beginning after December 31, 1984.

[T.D. 8130, 52 FR 8448, Mar. 18, 1987, as amended by T.D. 8560, 59 FR 41675, Aug. 15, 1994]

§ 1.1502–90 Table of contents.

The following list contains the major headings in §§1.1502-91 through 1.1502–99:

§ 1.1502–91 Application of section 382 with respect to a consolidated group.

(a) Determination and effect of an ownership change.
(1) In general.
(2) Special rule for post-change year that includes the change date.
(3) Cross-reference.
(b) Definitions and nomenclature.
(c) Loss group.
(1) Defined.

(2) Coordination with rule that ends separate tracking.
(3) Example.
(d) Loss subgroup.
(1) Net operating loss carryovers.
(2) Net unrealized built-in loss.
(3) Loss subgroup parent.
(4) Election to treat loss subgroup parent requirement as satisfied.
(5) Principal purpose of avoiding a limitation.
(6) Special rules.
(7) Examples.
(e) Pre-change consolidated attribute.
(1) Defined.
(2) Example.
(f) Pre-change subgroup attribute.
(1) Defined.
(2) Example.
(g) Net unrealized built-in gain and loss.
(1) In general.
(2) Members included.
(i) Consolidated group with a net operating loss.
(ii) Determination whether a consolidated group has a net unrealized built-in loss.
(iii) Loss subgroup with net operating loss carryovers.
(iv) Determination whether subgroup has a net unrealized built-in loss.
(v) Separate determination of section 382 limitation for recognized built-in losses and net operating losses.
(3) Coordination with rule that ends separate tracking.
(4) Acquisitions of built-in gain or loss assets.
(5) Indirect ownership.
(6) Common parent not common parent for five years.
(h) Recognized built-in gain or loss.
(1) In general. [Reserved]
(2) Disposition of stock or an intercompany obligation of a member.
(3) Intercompany transactions.
(4) Exchanged basis property.
(i) [Reserved]
(j) Predecessor and successor corporations.

§ 1.1502–92 Ownership change of a loss group or a loss subgroup.

(a) Scope.
(b) Determination of an ownership change.
(1) Parent change method.
(i) Loss group.
(ii) Loss subgroup.
(iii) Special rule if election regarding section 1504(a)(1) relationship is made.
(2) Examples.
(3) Special adjustments.
(i) Common parent succeeded by a new common parent.
(ii) Newly created loss subgroup parent.
(iii) Examples.
(4) End of separate tracking of certain losses.
(c) Supplemental rules for determining ownership change.
(1) Scope.
(2) Cause for applying supplemental rule.
(3) Operating rules.
(4) Supplemental ownership change rules.
(i) Additional testing dates for the common parent (or loss subgroup parent).
(ii) Treatment of subsidiary stock as stock of the common parent (or loss subgroup parent).
(iii) Different testing periods.
(iv) Disaffiliation of a subsidiary.
(v) Subsidiary stock acquired first.
(vi) Anti-duplication rule.
(5) Examples.
(d) Testing period following ownership change under this section.
(e) Information statements.
(1) Common parent of a loss group.
(2) Abbreviated statement with respect to loss subgroups.

§ 1.1502–93 Consolidated section 382 limitation (or subgroup section 382 limitation).

(a) Determination of the consolidated section 382 limitation (or subgroup section 382 limitation).
(1) In general.
(2) Coordination with apportionment rule.
(b) Value of the loss group (or loss subgroup).
(1) Stock value immediately before ownership change.
(2) Adjustment to value.
(i) In general.
(ii) Anti-duplication.
(3) Examples.
(c) Recognized built-in gain of a loss group or loss subgroup.
(1) In general.
(2) Adjustments.
(d) Continuity of business.
(1) In general.
(2) Example.
(e) Limitations of losses under other rules.

§ 1.1502–94 Coordination with section 382 and the regulations thereunder when a corporation becomes a member of a consolidated group.

(a) Scope.
(1) In general.
(2) Successor corporation as new loss member.
(3) Coordination in the case of a loss subgroup.
(4) End of separate tracking of certain losses.
(5) Cross-reference.
(b) Application of section 382 to a new loss member.
(1) In general.
(2) Adjustment to value.
(3) Pre-change separate attribute defined.
(4) Examples.

(c) Built-in gains and losses.
(d) Information statements.

§ 1.1502–95 Rules on ceasing to be a member of a consolidated group (or loss subgroup).

(a) In general.
(1) Consolidated group.
(2) Election by common parent.
(3) Coordination with §§ 1.1502–91 through 1.1502–93.
(b) Separate application of section 382 when a member leaves a consolidated group.
(1) In general.
(2) Effect of a prior ownership change of the group.
(3) Application in the case of a loss subgroup.
(4) Examples.
(c) Apportionment of a consolidated section 382 limitation.
(1) In general.
(2) Amount which may be apportioned.
(i) Consolidated section 382 limitation.
(ii) Net unrealized built-in gain.
(3) Effect of apportionment on the consolidated group.
(i) Consolidated section 382 limitation.
(ii) Net unrealized built-in gain.
(4) Effect on corporations to which an apportionment is made.
(i) Consolidated section 382 limitation.
(ii) Net unrealized built-in gain.
(5) Deemed apportionment when loss group terminates.
(6) Appropriate adjustments when former member leaves during the year.
(7) Examples.
(d) Rules pertaining to ceasing to be a member of a loss subgroup.
(1) In general.
(2) Exceptions.
(3) Examples.
(e) Allocation of net unrealized built-in loss.
(1) In general.
(2) Amount of allocation.
(i) In general.
(ii) Transferred basis property and deferred gain or loss.
(iii) Assets for which gain or loss has been recognized.
(iv) Exchanged basis property.
(v) Two or more members depart during the same year.
(vi) Anti-abuse rule.
(3) Effect of the allocation on the consolidated group.
(4) Effect on corporations to which the allocation is made.
(5) Subgroup principles.
(6) Apportionment of consolidated section 382 limitation (or subgroup section 382 limitation).
(i) In general.
(ii) Special rule for former members that become members of the same consolidated group.
(7) Examples.
(8) Reporting requirement.
(f) Filing the election to apportion the section 382 limitation and net unrealized built-in gain.
(1) Form of the election to apportion.
Signing of the election.
(3) Filing of the election.
(4) Revocation of election.

§ 1.1502–96 Miscellaneous rules.

(a) End of separate tracking of losses.
(1) Application.
(2) Effect of end of separate tracking.
(i) Net operating loss carryovers.
(ii) Net unrealized built-in losses.
(iii) Common parent not common parent for five years.
(3) Continuing effect of end of separate tracking.
(i) In general.
(ii) Example.
(4) Special rule for testing period.
(5) Limits on effects of end of separate tracking.
(b) Ownership change of subsidiary.
(1) Ownership change of a subsidiary because of options or plan or arrangement.
(2) Effect of the ownership change.
(i) In general.
(ii) Pre-change losses.
(3) Coordination with §§ 1.1502–91, 1.1502–92, and 1.1502–94.
(4) Example.
(c) Continuing effect of an ownership change.
(d) Losses reattributed under § 1.1502–20(g).
(1) In general.
(2) Deemed section 381(a) transaction.
(3) Rules relating to owner shifts.
(i) In general.
(ii) Examples.
(4) Rules relating to the section 382 limitation.
(i) Reattributed loss is a pre-change separate attribute of a new loss member.
(ii) Reattributed loss is a pre-change subgroup attribute.
(iii) Potential application of section 382(l)(1).
(iv) Duplication or omission of value.
(v) Special rule for continuity of business requirement.
(5) Election to reattribute section 382 limitation.
(i) Effect of election.
(ii) Examples.
(e) Time and manner of making election under § 1.1502–91(d)(4).
(1) In general.
(2) Election statement.

§ 1.1502–97 Special rules under section 382 for members under the jurisdiction of a court in a title 11 or similar case. [Reserved].

§ 1.1502–98 Coordination with section 383.

§ 1.1502–99 Effective dates.

(a) Effective date.
(b) Special rules.
(1) Election to treat subgroup parent requirement as satisfied.
(2) Principal purpose of avoiding a limitation.
(3) Ceasing to be a member of a loss subgroup.
(i) Ownership change of a loss subgroup.
(ii) Expiration of 5-year period.
(4) Reattribution of net operating loss carryovers under § 1.1502–20(g).
(5) Election to apportion net unrealized built-in gain.
(c) Testing period may include a period beginning before June 25, 1999.
(1) In general.
(2) Transition rule for net unrealized built-in losses.

[T.D. 8824, 64 FR 36128, July 2, 1999]

§ 1.1502–91 Application of section 382 with respect to a consolidated group.

(a) *Determination and effect of an ownership change*—(1) *In general.* This section and §§ 1.1502–92 and 1.1502–93 set forth the rules for determining an ownership change under section 382 for members of consolidated groups and the section 382 limitations with respect to attributes described in paragraphs (e) and (f) of this section. These rules generally provide that an ownership change and the section 382 limitation are determined with respect to these attributes for the group (or loss subgroup) on a single entity basis and not for its members separately. Following an ownership change of a loss group (or a loss subgroup) under § 1.1502–92, the amount of consolidated taxable income for any post-change year which may be offset by pre-change consolidated attributes (or pre-change subgroup attributes) shall not exceed the consolidated section 382 limitation (or subgroup section 382 limitation) for such year as determined under § 1.1502–93.

(2) *Special rule for post-change year that includes the change date.* If the post-change year includes the change date, section 382(b)(3)(A) is applied so that the consolidated section 382 limitation (or subgroup section 382 limitation) does not apply to the portion of consolidated taxable income that is allocable to the period in the year on or before the change date. See generally § 1.382–6 (relating to the allocation of income and loss). The allocation of consolidated taxable income for the post-change year that includes the change date must be made before taking into account any consolidated net operating loss deduction (as defined in § 1.1502–21(a)).

(3) *Cross-reference.* See §§ 1.1502–94 and 1.1502–95 for rules that apply section 382 to a corporation that becomes or ceases to be a member of a group or loss subgroup.

(b) *Definitions and nomenclature.* For purposes of this section and §§ 1.1502–92 through 1.1502–99, unless otherwise stated:

(1) The definitions and nomenclature contained in section 382 and the regulations thereunder (including the nomenclature and assumptions relating to the examples in § 1.382–2T(b)) and this section and §§ 1.1502–92 through 1.1502–99 apply.

(2) In all examples, all groups file consolidated returns, all corporations file their income tax returns on a calendar year basis, the only 5-percent shareholder of a corporation is a public group, the facts set forth the only owner shifts during the testing period, no election is made under paragraph (d)(4) of this section, and each asset of a corporation has a value equal to its adjusted basis.

(3) As the context requires, references to §§ 1.1502–91 through 1.1502–96 include references to corresponding provisions of §§ 1.1502–A through 1.1502–96A. For example, a reference to an ownership change under § 1.1502–92 in § 1.1502–95(b) can include a reference to an ownership change under § 1.1502–92A.

(c) *Loss group*—(1) *Defined.* A loss group is a consolidated group that—

(i) Is entitled to use a net operating loss carryover to the taxable year that did not arise (and is not treated under § 1.1502–21(c) as arising) in a SRLY;

(ii) Has a consolidated net operating loss for the taxable year in which a testing date of the common parent occurs (determined by treating the common parent as a loss corporation); or

(iii) Has a net unrealized built-in loss (determined under paragraph (g) of this section by treating the date on which the determination is made as though it were a change date).

(2) *Coordination with rule that ends separate tracking*. A consolidated group may be a loss group because a member's losses that arose in (or are treated as arising in) a SRLY are treated as described in paragraph (c)(1)(i) of this section. See § 1.1502–96(a).

(3) *Example*. The following example illustrates the principles of this paragraph (c):

Example. Loss group. (i) L and L1 file separate returns and each has a net operating loss carryover arising in Year 1 that is carried over to Year 2. A owns 40 shares and L owns 60 shares of the 100 outstanding shares of L1 stock. At the close of Year 1, L buys the 40 shares of L1 stock from A. For Year 2, L and L1 file a consolidated return. The following is a graphic illustration of these facts:

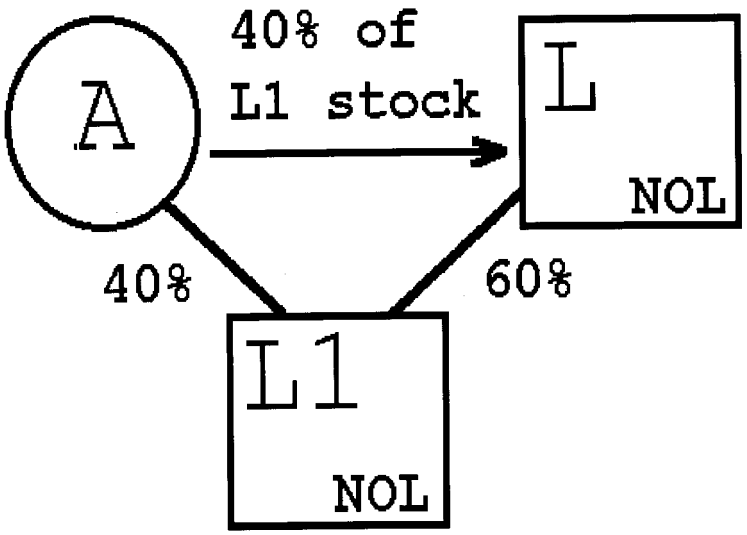

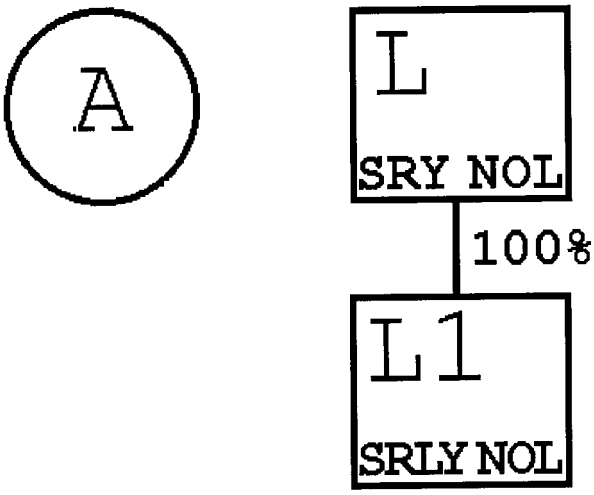

(ii) L and L1 become a loss group at the beginning of Year 2 because the group is entitled to use the Year 1 net operating loss carryover of L, the common parent, which did not arise (and is not treated under §1.1502–21(c) as arising) in a SRLY. See §1.1502–94 for rules relating to the application of section 382 with respect to L1's net operating loss

carryover from Year 1 which did arise in a SRLY.

(d) *Loss subgroup*—(1) *Net operating loss carryovers*. Two or more corporations that become members of a consolidated group (the current group) compose a loss subgroup if—

(i) They were affiliated with each other in another group (the former group), whether or not the group was a consolidated group;

(ii) They bear the relationship described in section 1504(a)(1) to each other through a loss subgroup parent immediately after they become members of the current group (or are deemed to bear that relationship as a result of an election described in paragraph (d)(4) of this section); and

(iii) At least one of the members carries over a net operating loss that did not arise (and is not treated under § 1.1502–21(c) as arising) in a SRLY with respect to the former group.

(2) *Net unrealized built-in loss*. Two or more corporations that become members of a consolidated group compose a loss subgroup if they—

(i) Have been continuously affiliated with each other for the 5 consecutive year period ending immediately before they become members of the group;

(ii) Bear the relationship described in section 1504(a)(1) to each other through a loss subgroup parent immediately after they become members of the current group (or are deemed to bear that relationship as a result of an election described in paragraph (d)(4) of this section); and

(iii) Have a net unrealized built-in loss (determined under paragraph (g) of this section on the day they become members of the group by treating that day as though it were a change date).

(3) *Loss subgroup parent*. A loss subgroup parent is the corporation that bears the same relationship to the other members of the loss subgroup as a common parent bears to the members of a group.

(4) *Election to treat loss subgroup parent requirement as satisfied*—(i) *In general*. Solely for purposes of paragraphs (d)(1)(i) and (2)(ii) of this section, two or more corporations that become members of a consolidated group at the same time and that were affiliated with each other immediately before becoming members of the group are deemed to bear a section 1504(a)(1) relationship to each other immediately after they become members of the group if the common parent of that group makes an election under this paragraph (d)(4) with respect to those members. See § 1.1502–96(e) for the time and manner of making the election.

(ii) *Members included*. An election under this paragraph (d)(4) includes all corporations that become members of the current group at the same time and that were affiliated with each other immediately before they become members of the current group.

(iii) *Each member included treated as loss subgroup parent*. If the members to which this election applies are a loss subgroup described in paragraph (d)(1) or (2) of this section, then each member is treated as a loss subgroup parent. See § 1.1502–92(b)(1)(iii) for special rules relating to an ownership change of a loss subgroup if the election under this paragraph (d)(4) is made.

(5) *Principal purpose of avoiding a limitation*. The corporations described in paragraphs (d)(1) or (2) of this section do not compose a loss subgroup if any one of them is formed, acquired, or availed of with a principal purpose of avoiding the application of, or increasing any limitation under, section 382. Instead, § 1.1502–94 applies with respect to the attributes of each such corporation. Any member excluded from a loss subgroup, if excluded with a principal purpose of so avoiding or increasing any section 382 limitation, is treated as included in the loss subgroup. This paragraph (d)(5) does not apply solely because, in connection with becoming members of the group, the members of a group (or loss subgroup) are rearranged (or, in the case of the preceding sentence, are not rearranged) to bear a relationship to the other members described in section 1504(a)(1).

(6) *Special rules*. See § 1.1502–95(d) for rules concerning when a corporation ceases to be a member of a loss subgroup, and for certain exceptions that may apply if a member does not continue to satisfy the loss subgroup parent requirement within the current group. See also § 1.1502–96(a) for a special rule regarding the end of separate tracking of SRLY losses of a member

that has an ownership change or that has been a member of a group for at least 5 consecutive years.

(7) *Examples*. The following examples illustrate the principles of this paragraph (d):

Example 1. Loss subgroup. (i) P owns all the L stock and L owns all the L1 stock. The P group has a consolidated net operating loss arising in Year 1 that is carried to Year 2. On May 2, Year 2, P sells all the stock of L to A, and L and L1 thereafter file consolidated returns. A portion of the Year 1 consolidated net operating loss is apportioned under §1.1502–21(b) to each of L and L1, which they carry over to Year 2. The following is a graphic illustration of these facts:

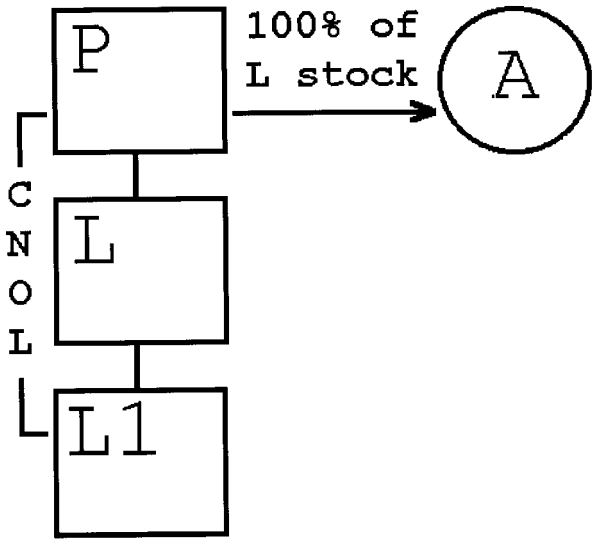

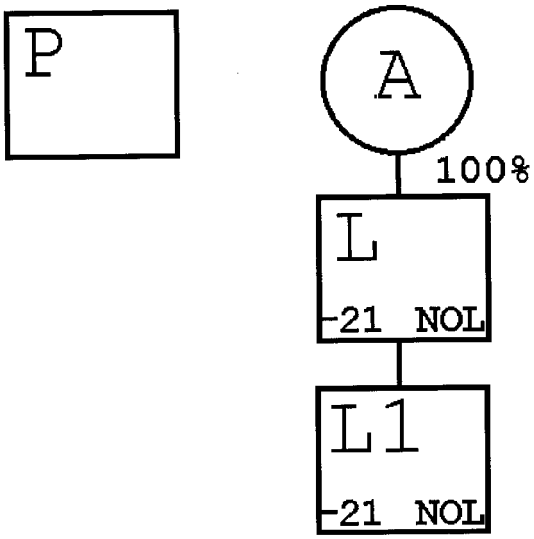

(ii) (a) L and L1 compose a loss subgroup within the meaning of paragraph (d)(1) of this section because—

(A) They were affiliated with each other in the P group (the former group);

(B) They bear a relationship described in section 1504(a)(1) to each other through a

loss subgroup parent (L) immediately after they became members of the L group; and

(C) At least one of the members (here, both L and L1) carries over a net operating loss to the L group (the current group) that did not arise in a SRLY with respect to the P group.

(b) Under paragraph (d)(3) of this section, L is the loss subgroup parent of the L loss subgroup.

Example 2. Loss subgroup—section 1504(a)(1) relationship. (i) P owns all the stock of L and L1. L owns all the stock of L2. L1 and L2 own 40 percent and 60 percent of the stock of L3, respectively. The P group has a consolidated net operating loss arising in Year 1 that is carried over to Year 2. On May 22, Year 2, P sells all the stock of L and L1 to P1, the common parent of another consolidated group. The Year 1 consolidated net operating loss is apportioned under §1.1502–21(b), and each of L, L1, L2, and L3 carries over a portion of such loss to the first consolidated return year of the P1 group ending after the acquisition. The following is a graphic illustration of these facts:

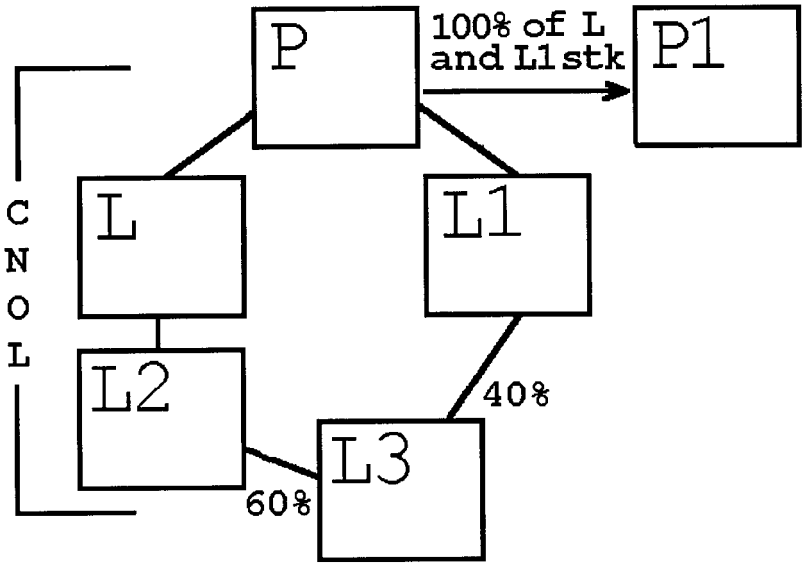

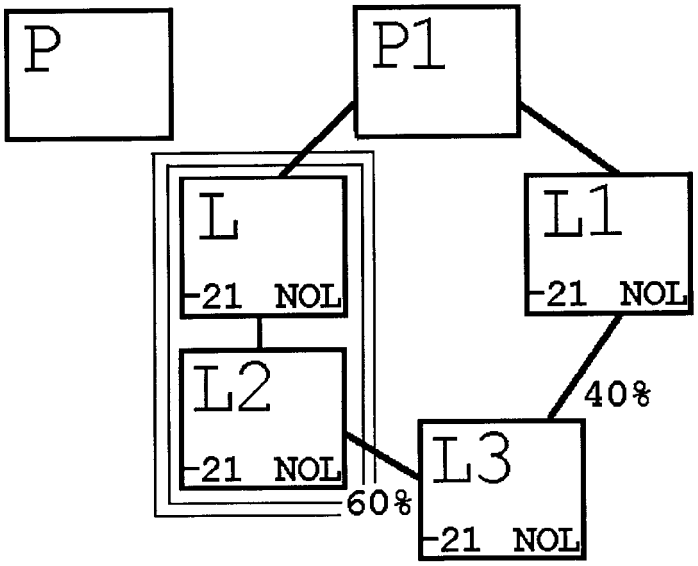

(ii) L and L2 compose a loss subgroup within the meaning of paragraph(d)(1) of this section. Neither L1 nor L3 is included in a loss subgroup because neither bears a relationship described in section 1504(a)(1) through a loss subgroup parent to any other member of the former group immediately after becoming members of the P1 group.

Example 3. Loss subgroup—section 1504(a)(1) relationship. The facts are the same as in *Example 2*, except that the stock of L1 is transferred to L in connection with the sale of the L stock to P1. L, L1, L2, and L3 compose a loss subgroup within the meaning of paragraph (d)(1) of this section because—

(i) They were affiliated with each other in the P group (the former group);

(ii) They bear a relationship described in section 1504(a)(1) to each other through a loss subgroup parent (L) immediately after they become members of the P1 group; and

(iii) At least one of the members (here, each of L, L1, L2, and L3) carries over a net operating loss to the P1 group (the current group).

Example 4. Loss subgroup—elective section 1504(a)(1) relationship. The facts are the same as in *Example 2*, except that P1 makes the election under paragraph (d)(4) of this section. The election includes L, L1, L2, and L3 (even though L and L2 would compose a loss subgroup without regard to the election) because they become members of the current group (the P1 group) at the same time and were affiliated with each other in the P group immediately before they became members of the P1 group. As a result of the election, L, L1, L2, and L3 are treated as satisfying the requirement that they bear the relationship described in section 1504(a)(1) to each other through a loss subgroup parent immediately after they become members of the P1 group. L, L1, L2, and L3 compose a loss subgroup within the meaning of paragraph (d)(1) of this section.

(e) *Pre-change consolidated attribute*—(1) *Defined.* A pre-change consolidated attribute of a loss group is—

(i) Any loss described in paragraph (c)(1)(i) or (ii) of this section (relating to the definition of loss group) that is allocable to the period ending on or before the change date; and

(ii) Any recognized built-in loss of the loss group.

(2) *Example.* The following example illustrates the principle of this paragraph (e):

Example. Pre-change consolidated attribute. (i) The L group has a consolidated net operating loss arising in Year 1 that is carried over to Year 2. The L loss group has an ownership change at the beginning of Year 2.

(ii) The net operating loss carryover of the L loss group from Year 1 is a pre-change consolidated attribute because the L group was entitled to use the loss in Year 2 and therefore the loss was described in paragraph (c)(1)(i) of this section. Under paragraph (a)(2)(i) of this section, the amount of consolidated taxable income of the L group for Year 2 that may be offset by this loss carryover may not exceed the consolidated section 382 limitation of the L group for that year. See §1.1502–93 for rules relating to the computation of the consolidated section 382 limitation.

(f) *Pre-change subgroup attribute*—(1) *Defined.* A pre-change subgroup attribute of a loss subgroup is—

(i) Any net operating loss carryover described in paragraph (d)(1)(iii) of this section (relating to the definition of loss subgroup); and

(ii) Any recognized built-in loss of the loss subgroup.

(2) *Example.* The following example illustrates the principle of this paragraph (f):

Pre-change subgroup attribute. (i) P is the common parent of a consolidated group. P owns all the stock of L, and L owns all the stock of L1. L2 is not a member of an affiliated group, and has a net operating loss arising in Year 1 that is carried over to Year 2. On December 11, Year 2, L1 acquires all the stock of L2, causing an ownership change of L2. During Year 2, the P group has a consolidated net operating loss that is carried over to Year 3. On November 2, Year 3, M acquires all the L stock from P. M, L, L1, and L2 thereafter file consolidated returns. All of the P group Year 2 consolidated net operating loss is apportioned under §1.1502–21(b) to L and L2, which they carry over to the M group.

(ii)(a) L, L1, and L2 compose a loss subgroup because—

(1) They were affiliated with each other in the P group (the former group);

(2) They bear a relationship described in section 1504(a)(1) to each other through a loss subgroup parent (L) immediately after they became members of the L group; and

(3) At least one of the members (here, both L and L2) carries over a net operating loss to the M group (the current group) that is described in paragraph (d)(1)(iii) of this section.

(b) For this purpose, L2's loss from Year 1 that was a SRLY loss with respect to the P group (the former group) is described in paragraph (d)(1)(iii) of this section because L2 had an ownership change on becoming a member of the P group (see §1.1502–96(a)) on December 11, Year 2. Starting on December 12, Year 2, the P group no longer separately tracked owner shifts of the stock of L1 with respect to the Year 1 loss. M's acquisition results in an ownership change of L, and therefore the L loss subgroup under §1.1502–92(a)(2). See §1.1502–93 for rules governing the computation of the subgroup section 382 limitation.

(iii) In the M group, L2's Year 1 loss continues to be subject to a section 382 limitation resulting from the ownership change

that occurred on December 11, Year 2. See § 1.1502–96(c).

(g) *Net unrealized built-in gain and loss*—(1) *In general*. The determination whether a consolidated group (or loss subgroup) has a net unrealized built-in gain or loss under section 382(h)(3) is based on the aggregate amount of the separately computed net unrealized built-in gains or losses of each member that is included in the group (or loss subgroup) under paragraph (g)(2) of this section, including items of built-in income and deduction described in section 382(h)(6). Thus, for example, amounts deferred under section 267, or under § 1.1502–13 (other than amounts deferred with respect to the stock of a member (or an intercompany obligation) included in the group (or loss subgroup) under paragraph (g)(2) of this section) are built-in items. The threshold requirement under section 382(h)(3)(B) applies on an aggregate basis and not on a member-by-member basis. The separately computed amount of a member included in a group or loss subgroup does not include any unrealized built-in gain or loss on stock (including stock described in section 1504(a)(4) and § 1.382–2T(f)(18)(ii) and (iii)) of another member included in the group or loss subgroup (or an intercompany obligation). However, a member of a group or loss subgroup includes in its separately computed amount the unrealized built-in gain or loss on stock (but not on an intercompany obligation) of another member not included in the group or loss subgroup. If a member is not included in the determination whether a group (or subgroup) has a net unrealized built-in loss under paragraph (g)(2)(ii) or (iv) of this section, that member is not included in the loss group or loss subgroup. See § 1.1502–94(c) (relating to built-in gain or loss of a new loss member) and § 1.1502–96(a) (relating to the end of separate tracking of certain losses).

(2) *Members included*—(i) *Consolidated group with a net operating loss*. The members included in the determination whether a consolidated group described in paragraph (c)(1)(i) or (ii) of this section (relating to loss groups with net operating losses) has a net unrealized built-in gain are all members of the consolidated group on the day that the determination is made.

(ii) *Determination whether a consolidated group has a net unrealized built-in loss*. The members included in the determination whether a consolidated group is a loss group described in paragraph (c)(1)(iii) of this section are—

(A) The common parent and all other members that have been affiliated with the common parent for the 5 consecutive year period ending on the day that the determination is made;

(B) Any other member that has a net unrealized built-in loss determined under paragraph (g)(1) of this section on the date that the determination is made, and that is neither a new loss member described in § 1.1502–94(a)(1)(ii) nor a member of a loss subgroup described in paragraph (d)(2) of this section;

(C) Any new loss member described in § 1.1502–94(a)(1)(ii) that has a net unrealized built-in gain determined under paragraph (g)(1) of this section on the day that the determination is made; and

(D) The members of a loss subgroup described in paragraph (d)(2) of this section if the members of the subgroup have, in the aggregate, a net unrealized built-in gain on the day that the determination is made.

(iii) *Loss subgroup with net operating loss carryovers*. The members included in the determination whether a loss subgroup described in paragraph (d)(1) of this section (relating to loss subgroups with net operating loss carryovers) has a net unrealized built-in gain are all members of the loss subgroup on the day that the determination is made.

(iv) *Determination whether subgroup has a net unrealized built-in loss*. The members included in the determination whether a subgroup has a net unrealized built-in loss are those members described in paragraphs (d)(2)(i) and (ii) of this section.

(v) *Separate determination of section 382 limitation for recognized built-in losses and net operating losses*. In determining

whether a loss group described in paragraph (c)(1)(i) or (ii) of this section (relating to loss groups that have net operating loss carryovers) has a net unrealized built-in gain which, if recognized, increases the consolidated section 382 limitation, the group includes, under paragraph (g)(2)(i) of this section, all of its members on the day the determination is made. Under paragraph (g)(2)(ii) of this section, however, for purposes of determining whether a group has a net unrealized built-in loss described in paragraph (c)(1)(iii) of this section, not all members of the consolidated group may be included. Thus, a consolidated group may have recognized built-in gains that increase the amount of consolidated taxable income that may be offset by its pre-change net operating loss carryovers that did not arise (and are not treated as arising) in a SRLY, and also may have recognized built-in losses the absorption of which is limited. Similar results may obtain for loss subgroups under paragraphs (g)(2)(iii) and (iv) of this section. See §1.1502–93(c)(2) for rules prohibiting the use of recognized built-in gains to increase the amount of consolidated taxable income that can be offset by recognized built-in losses.

(3) *Coordination with rule that ends separate tracking.* See §1.1502–96(a) for special rules relating to members (or loss subgroups) that have an ownership change within six months before, on, or after becoming a member of the group.

(4) *Acquisitions of built-in gain or loss assets.* A member of a consolidated group (or loss subgroup) may not, in determining its separately computed net unrealized built-in gain or loss, include any gain or loss with respect to assets acquired with a principal purpose to affect the amount of its net unrealized built-in gain or loss. A group (or loss subgroup) may not, in determining its net unrealized built-in gain or loss, include any gain or loss of a member acquired with a principal purpose to affect the amount of its net unrealized built-in gain or loss.

(5) *Indirect ownership.* A member's separately computed net unrealized built-in gain or loss is adjusted to the extent necessary to prevent any duplication of unrealized gain or loss attributable to the member's indirect ownership interest in another member through a nonmember if the member has a 5-percent or greater ownership interest in the nonmember.

(6) *Common parent not common parent for five years.* If the common parent has become the common parent of an existing group within the previous 5 year period in a transaction described in §1.1502–75(d)(2)(ii) or (3), appropriate adjustments must be made in applying paragraph (g)(2)(ii)(A) of this section so that corporations that have not been members of the group for five years are not included. In such a case, references to the common parent in paragraph (g)(2)(ii)(A) of this section are to the former common parent. Thus, members of the group remaining in existence (including the new common parent) that have not been affiliated with the former common parent (or that have not been members of that group) for the five consecutive year period ending on the day that the determination is made are not included under paragraph (g)(2)(ii)(A) of this section. See, however, §1.1502–96(a)(2) for special rules relating to members (or loss subgroups) that have an ownership change within six months before, on, or after the time that the member becomes a member of the group.

(h) *Recognized built-in gain or loss*—(1) *In general.* [Reserved]

(2) *Disposition of stock or an intercompany obligation of a member.* Gain or loss recognized by a member on the disposition of stock (including stock described in section 1504(a)(4) and §1.382–2T(f)(18)(ii) and (iii)) of another member is treated as a recognized gain or loss for purposes of section 382(h)(2) (unless disallowed under §1.1502–20 or otherwise), even though gain or loss on such stock was not included in the determination of a net unrealized built-in gain or loss under paragraph (g)(1) of this section. Gain or loss recognized by a member with respect to an intercompany obligation is treated as recognized gain or loss only to the extent (if any) the transaction gives rise to aggregate income or loss within the consolidated group.

(3) *Intercompany transactions.* Gain or loss that is deferred under provisions such as section 267 and §1.1502–13 is treated as recognized built-in gain or

loss only to the extent taken into account by the group during the recognition period. See also § 1.1502–13(c)(7) *Example 10*.

(4) *Exchanged basis property*. If the adjusted basis of any asset is determined, directly or indirectly, in whole or in part, by reference to the adjusted basis of another asset held by the member at the beginning of the recognition period, the asset is treated, with appropriate adjustments, as held by the member at the beginning of the recognition period.

(i) [Reserved]

(j) *Predecessor and successor corporations*. A reference in this section and §§ 1.1502–92 through 1.1502–99 to a corporation, member, common parent, loss subgroup parent, or subsidiary includes, as the context may require, a reference to a predecessor or successor corporation as defined in § 1.1502–1(f)(4). For example, the determination whether a successor satisfies the continuous affiliation requirement of paragraph (d)(2)(i) or (g)(2)(ii) of this section is made by reference to its predecessor.

[T.D. 8824, 64 FR 36129, July 2, 1999]

§ 1.1502–92 Ownership change of a loss group or a loss subgroup.

(a) *Scope*. This section provides rules for determining if there is an ownership change for purposes of section 382 with respect to a loss group or a loss subgroup. See § 1.1502–94 for special rules for determining if there is an ownership change with respect to a new loss member and § 1.1502–96(b) for special rules for determining if there is an ownership change of a subsidiary.

(b) *Determination of an ownership change*—(1) *Parent change method*—(i) *Loss group*. A loss group has an ownership change if the loss group's common parent has an ownership change under section 382 and the regulations thereunder. Solely for purposes of determining whether the common parent has an ownership change—

(A) The losses described in § 1.1502–91(c) are treated as net operating losses (or a net unrealized built-in loss) of the common parent; and

(B) The common parent determines the earliest day that its testing period can begin by reference to only the attributes that make the group a loss group under § 1.1502–91(c).

(ii) *Loss subgroup*. A loss subgroup has an ownership change if the loss subgroup parent has an ownership change under section 382 and the regulations thereunder. The principles of § 1.1502–95(b) (relating to ceasing to be a member of a consolidated group) apply in determining whether the loss subgroup parent has an ownership change. Solely for purposes of determining whether the loss subgroup parent has an ownership change—

(A) The losses described in § 1.1502–91(d) are treated as net operating losses (or a net unrealized built-in loss) of the loss subgroup parent;

(B) The day that the members of the loss subgroup become members of the group (or a loss subgroup) is treated as a testing date within the meaning of § 1.382–2(a)(4); and

(C) The loss subgroup parent determines the earliest day that its testing period can begin under § 1.382–2T(d)(3) by reference to only the attributes that make the members a loss subgroup under § 1.1502–91(d).

(iii) *Special rule if election regarding section 1504(a)(1) relationship is made*—(A) *Ownership change of deemed loss subgroup parent is an ownership change of loss subgroup*. If the common parent makes an election under § 1.1502–91(d)(4), each of the members in the loss subgroup is treated as the loss subgroup parent for purposes of determining whether the loss subgroup has an ownership change under section 382 and the regulations thereunder on or after the day the members become members of the group.

(B) *Exception*. Paragraph (b)(1)(iii)(A) of this section does not apply to cause an ownership change of a loss subgroup if a deemed loss subgroup parent has an ownership change upon (or after) ceasing to be a member of the current group.

(2) *Examples*. The following examples illustrate the principles of this paragraph (b):

Example 1. Loss group—ownership change of the common parent. (i) A owns all the L stock. L owns 80 percent and B owns 20 percent of the L1 stock. For Year 1, the L group has a consolidated net operating loss that resulted from the operations of L1 and that is carried over to Year 2. The value of the L

stock is $1000. The total value of the L1 stock is $600 and the value of the L1 stock held by B is $120. The L group is a loss group under § 1.1502–91(c)(1) because it is entitled to use its net operating loss carryover from Year 1. On August 15, Year 2, A sells 51 percent of the L stock to C. The following is a graphic illustration of these facts:

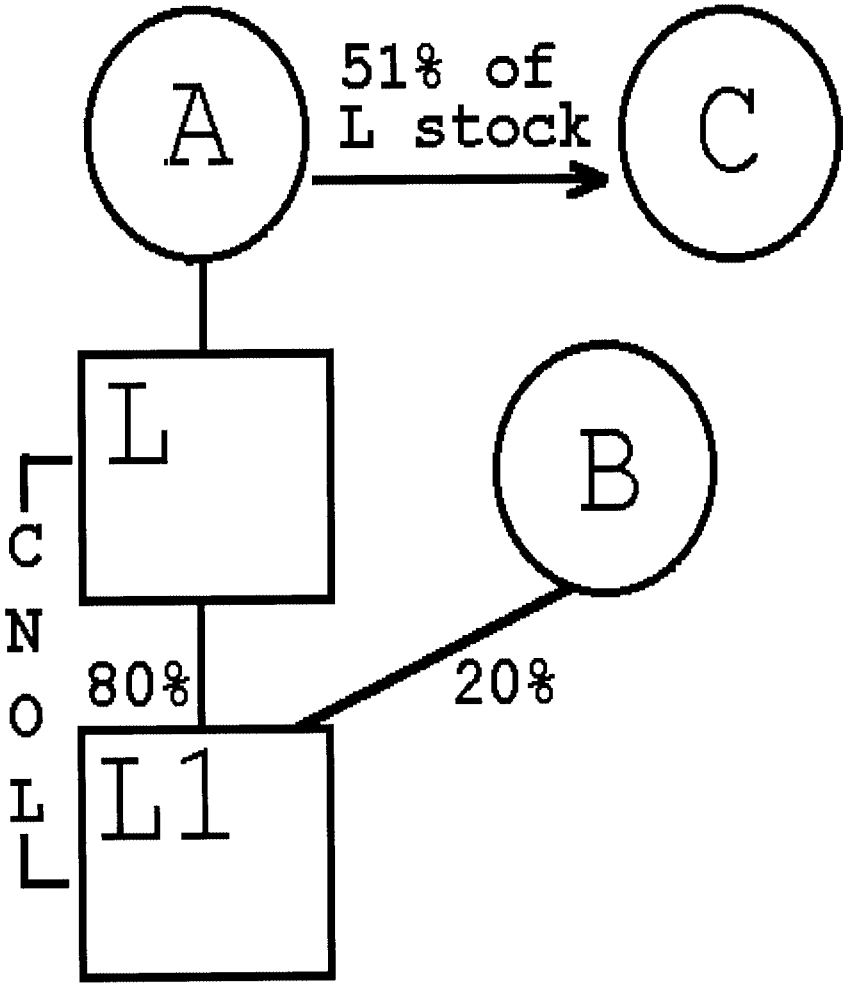

(ii) Under paragraph (b)(1)(i) of this section, section 382 and the regulations thereunder are applied to L to determine whether it (and therefore the L loss group) has an ownership change with respect to its net operating loss carryover from Year 1 attributable to L1 on August 15, Year 2. The sale of the L stock to C causes an ownership change of L under § 1.382–2T and of the L loss group under paragraph (b)(1)(i) of this section. The amount of consolidated taxable income of the L loss group for any post-change taxable year that may be offset by its pre-change consolidated attributes (that is, the net operating loss carryover from Year 1 attributable to L1) may not exceed the consolidated section 382 limitation for the L loss group for the taxable year.

Example 2. Loss group—owner shifts of subsidiaries disregarded. (i) The facts are the

same as in *Example 1*, except that on August 15, Year 2, A sells only 49 percent of the L stock to C and, on December 12, Year 3, in an unrelated transaction, B sells the 20 percent of the L1 stock to D. A's sale of the L stock to C does not cause an ownership change of L under §1.382-2T nor of the L loss group under paragraph (b)(1)(i) of this section. The following is a graphic illustration of these facts:

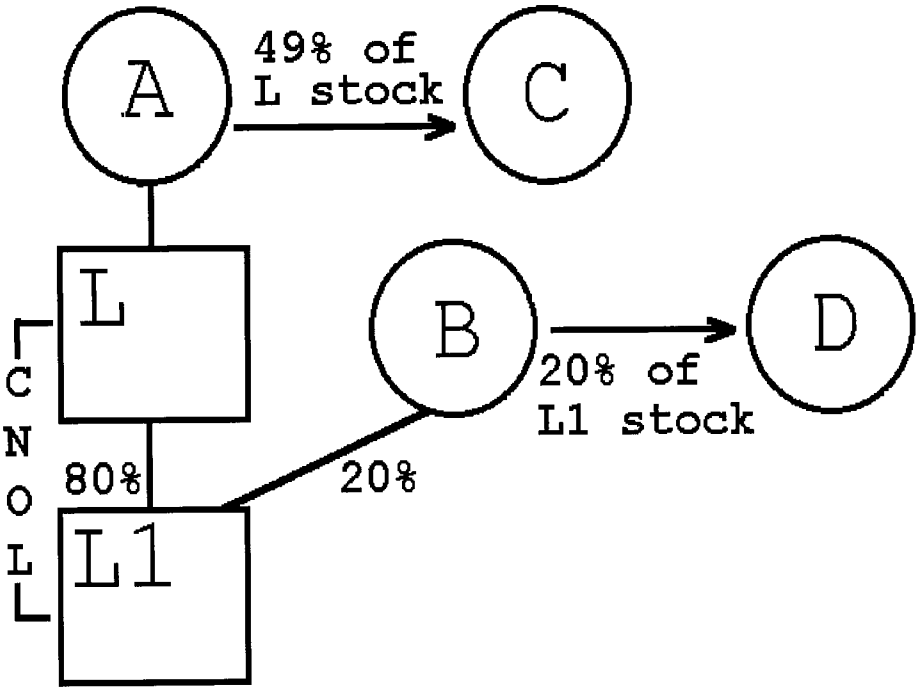

(ii) B's subsequent sale of L1 stock is not taken into account for purposes of determining whether the L loss group has an ownership change under paragraph (b)(1)(i) of this section, and, accordingly, there is no ownership change of the L loss group. See paragraph (c) of this section, however, for a supplemental ownership change method that would apply to cause an ownership change if the purchases by C and D were pursuant to a plan or arrangement and certain other conditions are satisfied.

Example 3. Loss subgroup—ownership change of loss subgroup parent controls. (i) P owns all the L stock. L owns 80 percent and A owns 20 percent of the L1 stock. The P group has a consolidated net operating loss arising in Year 1 that is carried over to Year 2. On September 9, Year 2, P sells 51 percent of the L stock to B, and L1 is apportioned a portion of the Year 1 consolidated net operating loss under §1.1502–21(b), which it carries over to its next taxable year. L and L1 file a consolidated return for their first taxable year ending after the sale to B. The following is a graphic illustration of these facts:

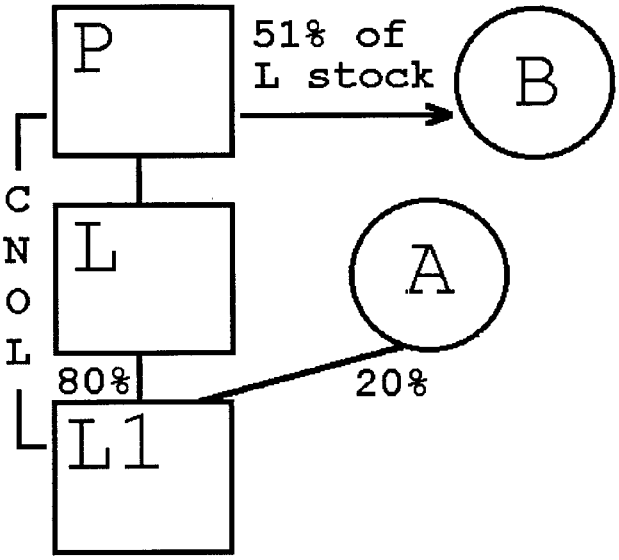

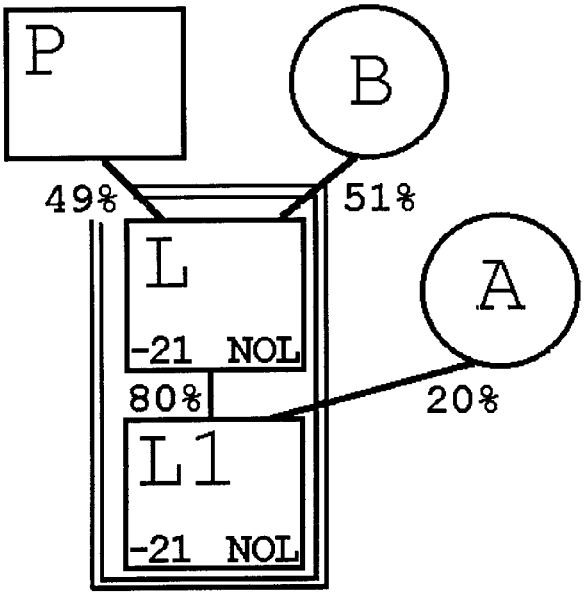

(ii) Under §1.1502–91(d)(1), L and L1 compose a loss subgroup on September 9, Year 2, the day that they become members of the L group. Under paragraph (b)(1)(ii) of this section, section 382 and the regulations thereunder are applied to L to determine whether it (and therefore the L loss subgroup) has an ownership change with respect to the portion

of the Year 1 consolidated net operating loss that is apportioned to L1 on September 9, Year 2. L has an ownership change resulting from P's sale of 51 percent of the L stock to A. Therefore, the L loss subgroup has an ownership change with respect to that loss.

Example 4. Loss group and loss subgroup—contemporaneous ownership changes. (i) A owns all the stock of corporation M, M owns 35 percent and B owns 65 percent of the L stock, and L owns all the L1 stock. The L group has a consolidated net operating loss arising in Year 1 that is carried over to Year 2. On May 19, Year 2, B sells 45 percent of the L stock to M for cash. M, L, and L1 thereafter file consolidated returns. L and L1 are each apportioned a portion of the Year 1 consolidated net operating loss, which they carry over to the M group's Year 2 and Year 3 consolidated return years. The M group has a consolidated net operating loss arising in Year 2 that is carried over to Year 3. On June 9, Year 3, A sells 70 percent of the M stock to C. The following is a graphic illustration of these facts:

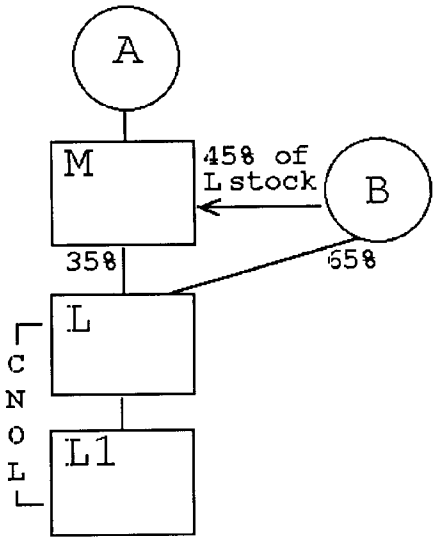

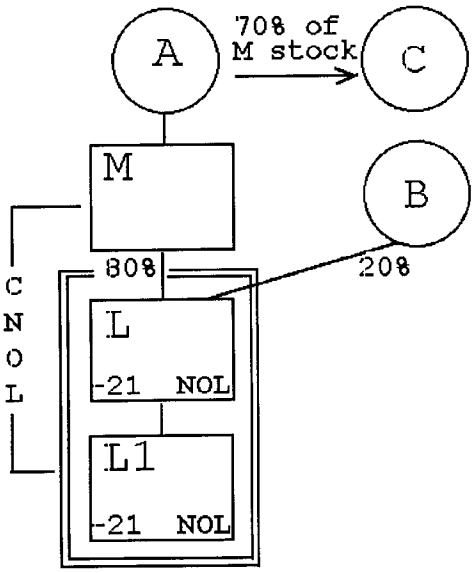

(ii) Under §1.1502–91(d)(1), L and L1 compose a loss subgroup on May 19, Year 2, the day they become members of the M group. Under paragraph (b)(1)(ii) of this section, section 382 and the regulations thereunder are applied to L to determine whether L (and therefore the L loss subgroup) has an ownership change with respect to the loss

carryovers from Year 1 on May 19, Year 2, a testing date because of B's sale of L stock to M. The sale of L stock to M results in only a 45 percentage point increase in A's ownership of L stock. Thus, there is no ownership change of L (or the L loss subgroup) with respect to those loss carryovers under paragraph (b)(1)(ii) of this section on that day.

(iii) June 9, Year 3, is also a testing date with respect to the L loss subgroup because of A's sale of M stock to C. The sale results in a 56 percentage point increase in C's ownership of L stock, and L has an ownership change. Therefore, the L loss subgroup has an ownership change on that day with respect to the loss carryovers from Year 1.

(iv) Paragraph (b)(1)(i) of this section requires that section 382 and the regulations thereunder be applied to M to determine whether M (and therefore the M loss group) has an ownership change with respect to the net operating loss carryover from Year 2 on June 9, Year 3, a testing date because of A's sale of M stock to C. The sale results in a 70 percentage point increase in C's ownership of M stock, and M has an ownership change. Therefore, the M loss group has an ownership change on that day with respect to that loss carryover.

Example 5—Deemed subgroup parent. (i) P owns all the stock of L and L1 and 80 percent of the stock of T. A owns the remaining 20 percent of the stock of T. L1 owns all the stock of L2. P1, which owns 60 percent of the stock of P, acquires, at the beginning of Year 2, the T, L, and L1 stock owned by P, and T, L, L1, and L2 become members of the P1 group. The P group has a consolidated net operating loss arising in Year 1 that is carried over to Year 2. L, L1, and L2 are each apportioned a portion of the Year 1 consolidated net operating loss under §1.1502–21(b), which they carry over to the P1 group's Year 2 and Year 3 consolidated return years. P1 makes the election described in §1.1502–91(d)(4) to treat T, L, L1 and L2 as meeting the section 1504(a)(1) requirement of §1.1502–91(d)(1)(ii). As a result of the election, T, L, L1 and L2 compose a loss subgroup and T, L, L1, and L2 are each treated as the loss subgroup parent for purposes of this paragraph (b). Because of P1's indirect ownership of T, L, L1, and L2 prior to P1's acquisition of the T, L, and L1 stock, P1's acquisition does not cause an ownership change of the loss subgroup.

(ii) On February 2, Year 3, L1 sells all of the stock of L2 to B. Although L2 is treated as a loss subgroup parent, the determination whether the loss subgroup comprised of T, L, and L1 has an ownership change under this paragraph (b) is made without regard to the sale of L2 because L2's ownership change occurred upon ceasing to be a member of the P1 group. See §1.1502–95(b) to determine the application of section 382 to L2 when L2 ceases to be a member of the P1 group and the T, L, L1 and L2 loss subgroup.

(iii) On March 26, Year 3, A sells her 20 percent minority stock interest in T to C . C's purchase, together with the 32 percentage point owner shift effected by P1's acquisition of the T stock at the beginning of Year 2, causes an ownership change of T, and therefore of the loss subgroup comprised of T, L, and L1.

(3) *Special adjustments*—(i) *Common parent succeeded by a new common parent.* For purposes of determining if a loss group has an ownership change, if the common parent of a loss group is succeeded or acquired by a new common parent and the loss group remains in existence, the new common parent is treated as a continuation of the former common parent with appropriate adjustments to take into account shifts in ownership of the former common parent during the testing period (including shifts that occur incident to the common parent's becoming the former common parent). A new common parent may be a continuation of the former common parent even if, under §1.1502–91(g)(2)(ii), the new common parent is not included in determining whether the group has a net unrealized built-in loss.

(ii) *Newly created loss subgroup parent.* For purposes of determining if a loss subgroup has an ownership change, if the member that is the loss subgroup parent has not been the loss subgroup parent for at least 3 years as of a testing date, appropriate adjustments must be made to take into account owner shifts of members of the loss subgroup so that the structure of the loss subgroup does not have the effect of avoiding an ownership change under section 382. (See paragraph (b)(3)(iii), *Example 3* of this section.)

(iii) *Examples.* The following examples illustrate the principles of this paragraph (b)(3):

Example 1. New common parent acquires old common parent. (i) A, who owns all the L stock, sells 30 percent of the L stock to B on August 26, Year 1. L owns all the L1 stock. The L group has a consolidated net operating loss arising in Year 1 that is carried over to Year 3. On July 16, Year 2, A and B transfer their L stock to a newly created holding company, HC, in exchange for 70 percent and 30 percent, respectively, of the HC stock. HC, L, and L1 thereafter file consolidated returns. Under the principles of §1.1502–75(d), the L loss group is treated as remaining in

existence, with HC taking the place of L as the new common parent of the loss group. The following is a graphic illustration of these facts:

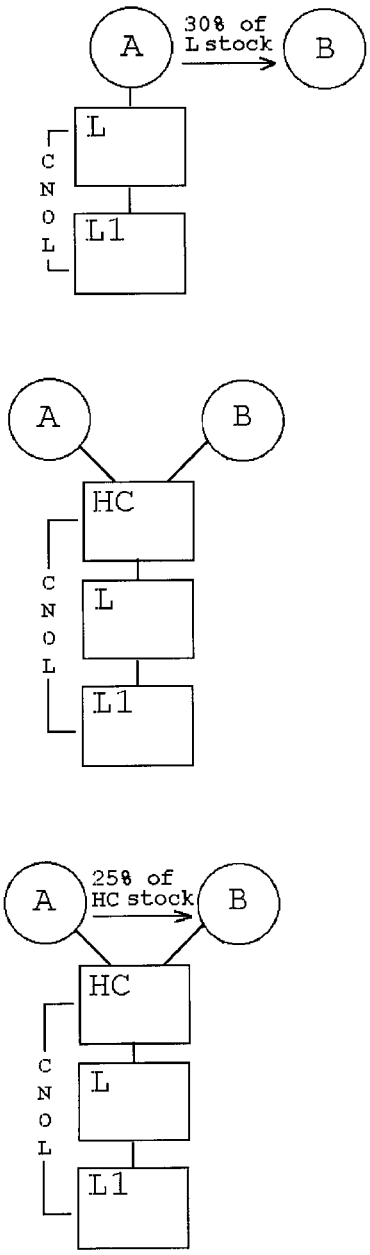

(ii) On November 11, Year 3, A sells 25 percent of the HC stock to B. For purposes of determining if the L loss group has an ownership change under paragraph (b)(1)(i) of this section on November 11, Year 3, HC is treated as a continuation of L under paragraph (b)(4)(i) of this section because it acquired L and became the common parent without terminating the L loss group. Accordingly, HC's testing period commences on January 1, Year 1, the first day of the taxable year of the L loss group in which the consolidated net operating loss that is carried over to Year 3 arose (see §1.382–2T(d)(3)(i)). Immediately after the close of November 11, Year 3, B's percentage ownership interest in the common parent of the loss group (HC) has increased by 55 percentage points over its lowest percentage ownership during the testing period (zero percent). Accordingly, HC and the L loss group have an ownership change on that day.

Example 2. New common parent in case in which common parent ceases to exist. (i) A, B, and C each own one-third of the L stock. L owns all the L1 stock. The L group has a consolidated net operating loss arising in Year 2 that is carried over to Year 3. On November 22, Year 3, L is merged into P, a corporation owned by D, and L1 thereafter files consolidated returns with P. A, B, and C, as a result of owning stock of L, own 90 percent of P's stock after the merger. D owns the remaining 10 percent of P's stock. The merger of L into P qualifies as a reverse acquisition of the L group under §1.1502–75(d)(3)(i), and the L loss group is treated as remaining in existence, with P taking the place of L as the new common parent of the L group. The following is a graphic illustration of these facts:

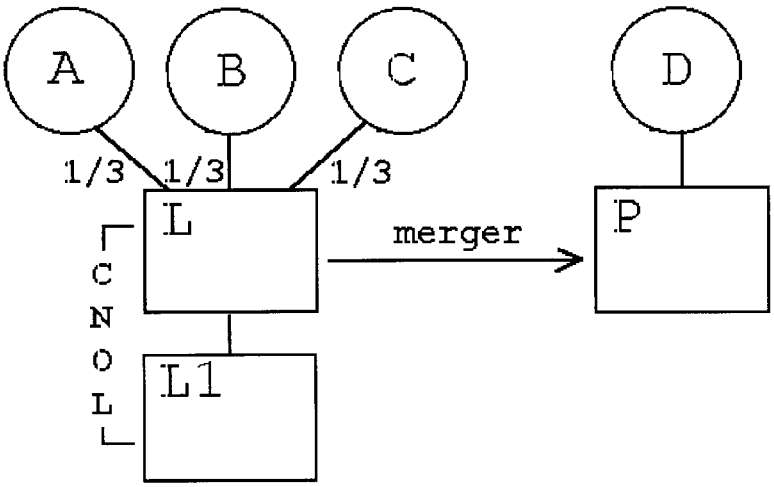

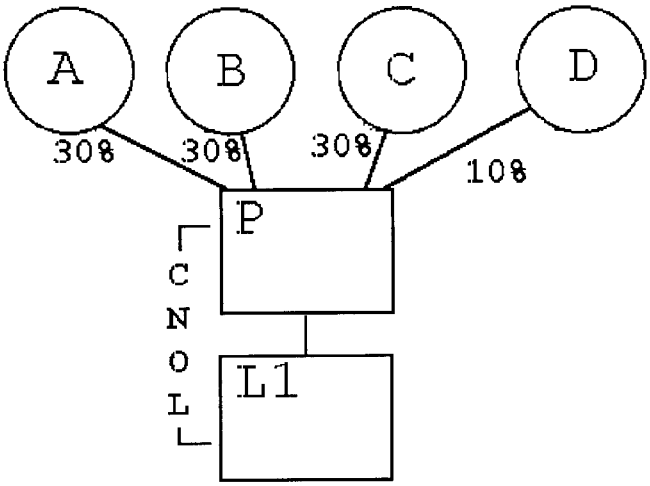

(ii) For purposes of determining if the L loss group has an ownership change on November 22, Year 3, the day of the merger, P is treated as a continuation of L so that the testing period for P begins on January 1, Year 2, the first day of the taxable year of the L loss group in which the consolidated net operating loss that is carried over to

Year 3 arose. Immediately after the close of November 22, Year 3, D is the only 5-percent shareholder that has increased his ownership interest in P during the testing period (from zero to 10 percentage points).

(iii) The facts are the same as in paragraph (i) of this *Example 2*, except that A has held 23⅓ shares (23⅓ percent) of L's stock for five years, and A purchased an additional 10 shares of L stock from E two years before the merger. Immediately after the close of the day of the merger (a testing date), A's ownership interest in P, the common parent of the L loss group, has increased by 6⅔ percentage points over A's lowest percentage ownership during the testing period (23⅓ percent to 30 percent).

(iv) The facts are the same as in (i) of this *Example 2*, except that P has a net operating loss arising in Year 1 that is carried to the first consolidated return year ending after the day of the merger. Solely for purposes of determining whether the L loss group has an ownership change under paragraph (b)(1)(i) of this section, the testing period for P commences on January 1, Year 2. P does not determine the earliest day for its testing period by reference to its net operating loss carryover from Year 1, which §§1.1502–1(f)(3) and 1.1502–75(d)(3)(i) treat as arising in a SRLY. See §1.1502–94 to determine the application of section 382 with respect to P's net operating loss carryover.

Example 3. Newly acquired loss subgroup parent. (i) P owns all the L stock and L owns all the L1 stock. The P group has a consolidated net operating loss arising in Year 1 that is carried over to Year 3. On January 19, Year 2, L issues a 20 percent stock interest to B. On February 5, Year 3, P contributes its L stock to a newly formed subsidiary, HC, in exchange for all the HC stock, and distributes the HC stock to its sole shareholder A. HC, L, and L1 thereafter file consolidated returns. A portion of the P group's Year 1 consolidated net operating loss is apportioned to L and L1 under §1.1502–21(b) and is carried over to the HC group's year ending after February 5, Year 3. HC, L, and L1 compose a loss subgroup within the meaning of §1.1502–91(d) with respect to the net operating loss carryovers from Year 1. The following is a graphic illustration of these facts:

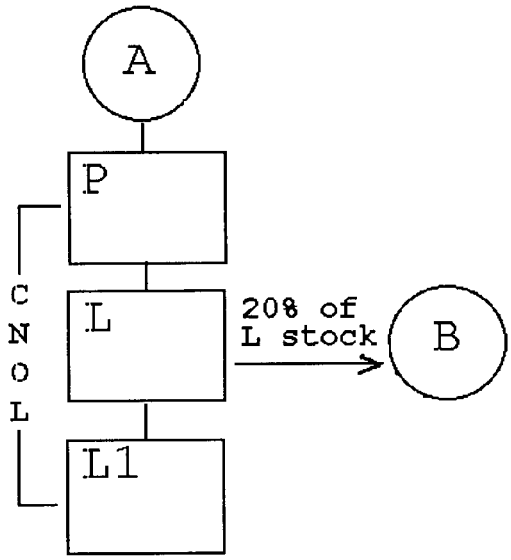

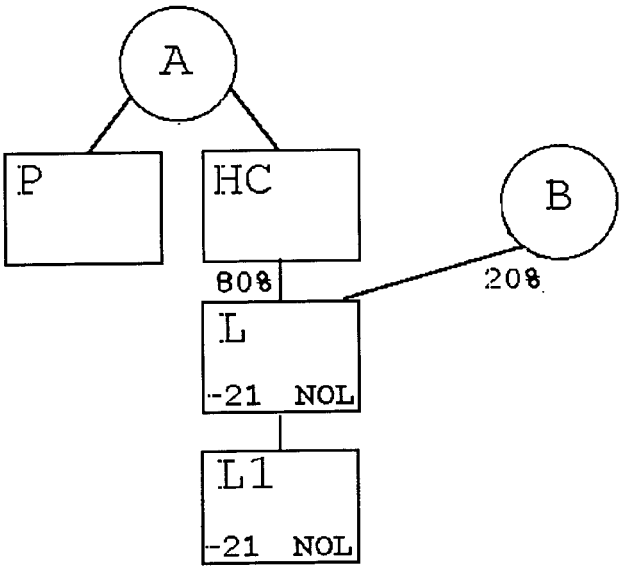

(ii) February 5, Year 3, is a testing date for HC as the loss subgroup parent with respect to the net operating loss carryovers of L and L1 from Year 1. See paragraph (b)(1)(ii)(B) of this section. For purposes of determining whether HC has an ownership change on the testing date, appropriate adjustments must be made with respect to the changes in the

percentage ownership of the stock of HC because HC was not the loss subgroup parent for at least 3 years prior to the day on which it became a member of the HC loss subgroup (a testing date). The appropriate adjustments include adjustments so that HC succeeds to the owner shifts of other members of the former group. Thus, HC succeeds to the owner shift of L that resulted from the sale of the 20 percent interest to B in determining whether the HC loss subgroup has an ownership change on February 5, Year 3, and on any subsequent testing date that includes January 19, Year 2.

(4) *End of separate tracking of certain losses*. If §1.1502–96(a) (relating to the end of separate tracking of attributes) applies to a loss subgroup, then, while one or more members that were included in the loss subgroup remain members of the consolidated group, there is an ownership change with respect to their attributes described in §1.1502–96(a)(2) only if the consolidated group is a loss group and has an ownership change under paragraph (b)(1)(i) of this section (or such a member has an ownership change under §1.1502–96(b) (relating to ownership changes of subsidiaries)). If, however, the loss subgroup has had an ownership change before §1.1502–96(a) applies, see §1.1502–96(c) for the continuing application of the subgroup's section 382 limitation with respect to its pre-change subgroup attributes.

(c) *Supplemental rules for determining ownership change*—

(1) *Scope*. This paragraph (c) contains a supplemental rule for determining whether there is an ownership change of a loss group (or loss subgroup). It applies in addition to, and not instead of, the rules of paragraph (b) of this section. Thus, for example, if the common parent of the loss group has an ownership change under paragraph (b) of this section, the loss group has an ownership change even if, by applying this paragraph (c), the common parent would not have an ownership change. This paragraph (c) does not apply in determining an ownership change of a loss subgroup for which an election under §1.1502–91(d)(4) is made.

(2) *Cause for applying supplemental rule*. This paragraph (c) applies to a loss group (or loss subgroup) if—

(i) Any 5-percent shareholder of the common parent (or loss subgroup parent) increases its percentage ownership interest in the stock of both—

(A) A subsidiary of the loss group (or loss subgroup) other than by a direct or indirect acquisition of stock of the common parent (or loss subgroup parent); and

(B) The common parent (or loss subgroup parent);

(ii) Those increases occur within a 3 year period ending on any day of a consolidated return year or, if shorter, the period beginning on the first day following the most recent ownership change of the loss group (or loss subgroup); and

(iii) Either—

(A) The common parent (or loss subgroup parent) has actual knowledge of the increase in the 5-percent shareholder's ownership interest in the stock of the subsidiary (or has actual knowledge of the plan or arrangement described in paragraph (c)(3)(i) of this section) before the date that the group's income tax return is filed for the taxable year that includes the date of that increase; or

(B) At any time during the period described in paragraph (c)(2)(ii) of this section, the 5-percent shareholder of the common parent is also a 5-percent shareholder of the subsidiary (determined without regard to paragraph (c)(3)(i) of this section) whose percentage increase in the ownership of the stock of the subsidiary would be taken into account in determining if the subsidiary has an ownership change (determined as if the subsidiary was a loss corporation and applying the principles of §1.382–2T(k), including the principles relating to duty to inquire).

(3) *Operating rules*. Solely for purposes of this paragraph (c)—

(i) A 5-percent shareholder of the common parent (or loss subgroup parent) is treated as increasing its ownership interest in the stock of a subsidiary to the extent, if any, that another person or persons increases its percentage ownership interest in the stock of a subsidiary pursuant to a plan or arrangement under which the 5-percent shareholder increases its percentage ownership interest in the common parent (or loss subgroup parent);

(ii) The rules in section 382(l)(3) and §§1.382–2T(h) and 1.382–4(d) (relating to

constructive ownership) apply with respect to the stock of the subsidiary by treating such stock as stock of a loss corporation; and

(iii) In the case of a loss subgroup, a subsidiary includes any member of the loss subgroup other than the loss subgroup parent. (A loss subgroup parent is, however, a subsidiary of the loss group of which it is a member.)

(4) *Supplemental ownership change rules.* The determination whether the common parent (or loss subgroup parent) has an ownership change is made by applying paragraph (b)(1) of this section as modified by the following additional rules:

(i) *Additional testing dates for the common parent (or loss subgroup parent).* A testing date for the common parent (or loss subgroup parent) also includes—

(A) Each day on which there is an increase in the percentage ownership of stock of a subsidiary as described in paragraph (c)(2) of this section; and

(B) The first day of the first consolidated return year for which the group is a loss group (or the members compose a loss subgroup).

(ii) *Treatment of subsidiary stock as stock of the common parent (or loss subgroup parent).* The common parent (or loss subgroup parent) is treated as though it had issued to the person acquiring (or deemed to acquire) the subsidiary stock an amount of its own stock (by value) that equals the value of the subsidiary stock represented by the percentage increase in that person's ownership of the subsidiary (determined on a separate entity basis). Similar principles apply if the increase in percentage ownership interest is effected by a redemption or similar transaction.

(iii) *Different testing periods.* Stock treated as issued under paragraph (c)(4)(ii) of this section on a testing date is not treated as so issued for purposes of applying the ownership change rules of this paragraph (c) and paragraph (b)(1) of this section in a testing period that does not include that testing date.

(iv) *Disaffiliation of a subsidiary.* If a deemed issuance of stock under paragraph (c)(4)(ii) of this section would not cause the loss group (or loss subgroup) to have an ownership change before the day (if any) on which the subsidiary ceases to be a member of the loss group (or subgroup), then paragraph (c)(4) of this section shall not apply.

(v) *Subsidiary stock acquired first.* If an increase of subsidiary stock described in paragraph (c)(2)(i)(A) of this section occurs before the date that the 5-percent shareholder increases its percentage ownership interest in the stock of the common parent (or loss subgroup parent), then the deemed issuance of stock is treated as occurring on that later date, but in an amount equal to the value of the subsidiary stock on the date it was acquired.

(vi) *Anti-duplication rule.* If two or more 5-percent shareholders are treated as increasing their percentage ownership interests pursuant to the same plan or arrangement described in paragraph (c)(3)(i) of this section, appropriate adjustments must be made so that the amount of stock treated as issued is not taken into account more than once.

(5) *Examples.* The following examples illustrate the principles of this paragraph (c):

Example 1. Stock of the common parent under supplemental rules. (i) A owns all the L stock. L is not a member of an affiliated group and has a net operating loss carryover arising in Year 1 that is carried over to Year 6. On September 20, Year 6, L transfers all of its assets and liabilities to a newly created subsidiary, S, in exchange for S stock. L and S thereafter file consolidated returns. On November 23, Year 6, B contributes cash to L in exchange for a 45 percent ownership interest in L and contributes cash to S for a 20 percent ownership interest in S.

(ii) During the 3 year period ending on November 23, Year 6, B is a 5% shareholder of L and of S that increases its ownership interest in L and S during that period. Under paragraph (c)(4)(ii) of this section, the determination whether L (the common parent of a loss group) has an ownership change on November 23, Year 6 (or, subject to paragraph (c)(4)(iv) of this section, on any testing date in the testing period which includes November 23, Year 6), is made by applying paragraph (b)(1)(i) of this section and by treating the value of B's 20 percent ownership interest in S as if it were L stock issued to B. Because B is a 5% shareholder of both L and S during the 3 year period ending on November 23, Year 6, and B's increase in its percentage ownership in the stock of S would be taken into account in determining if S (if it were a loss corporation) had an ownership change,

it is not relevant whether L has actual knowledge of B's acquisition of S stock.

Example 2. Plan or arrangement—public offering of subsidiary stock. (i) A owns all the stock of L and L owns all the stock of L1. The L group has a consolidated net operating loss arising in Year 1 that resulted from the operations of L1 and that is carried over to Year 2. On October 7, Year 2, A sells 49 percent of the L stock to B. As part of a plan that includes the sale of L stock, A causes a public offering of L1 stock on November 6, Year 2. L has actual knowledge of the plan. The following is a graphic illustration of these facts:

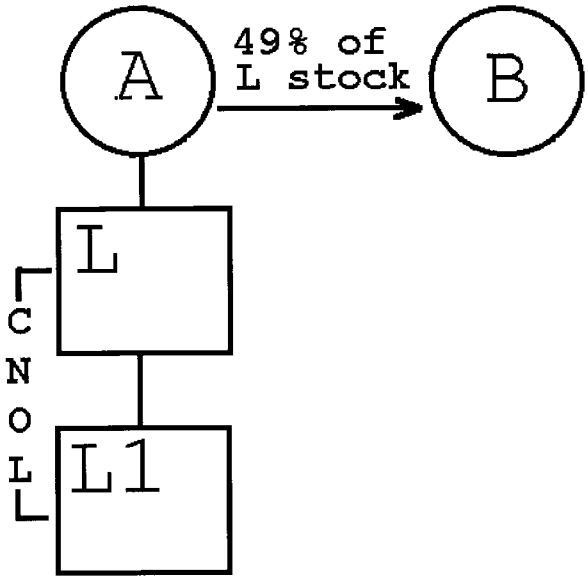

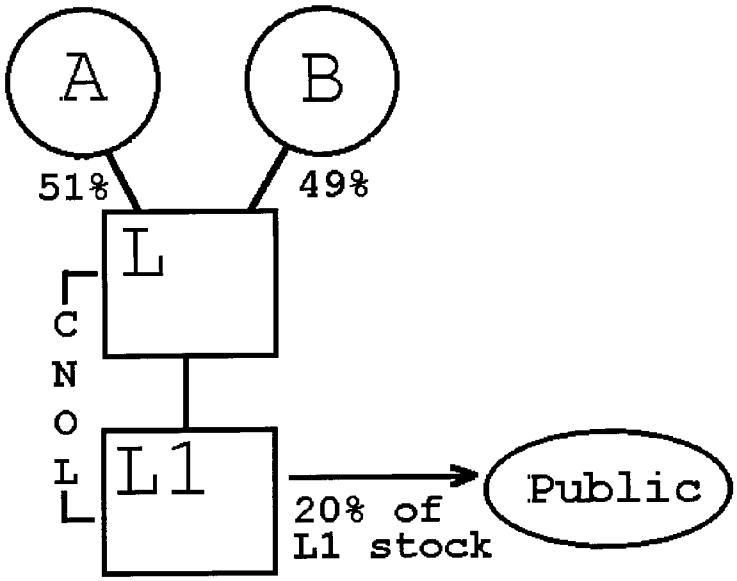

(ii) A's sale of the L stock to B does not cause an ownership change of the L loss group on October 7, Year 2, under the rules of §1.382–2T and paragraph (b)(1)(i) of this section.

(iii) Because the issuance of L1 stock to the public occurs as part of the same plan as

B's acquisition of L stock, and L has knowledge of the plan, paragraph (c)(4) of this section applies to determine whether the L loss group has an ownership change on November 6, Year 2 (or, subject to paragraph (c)(4)(iv) of this section, on any testing date for which the testing period includes November 6, Year 2).

(d) *Testing period following ownership change under this section.* If a loss group (or a loss subgroup) has had an ownership change under this section, the testing period for determining a subsequent ownership change with respect to pre-change consolidated attributes (or pre-change subgroup attributes) begins no earlier than the first day following the loss group's (or loss subgroup's) most recent change date.

(e) *Information statements*—(1) *Common parent of a loss group.* The common parent of a loss group must file the information statement required by §1.382–2T(a)(2)(ii) for a consolidated return year because of any owner shift, equity structure shift, or other transaction described in §1.382–2T(a)(2)(i)—

(i) With respect to the common parent and with respect to any subsidiary stock subject to paragraph (c) of this section; and

(ii) With respect to an ownership change described in §1.1502–96(b) (relating to ownership changes of subsidiaries).

(2) *Abbreviated statement with respect to loss subgroups.* The common parent of a consolidated group that has a loss subgroup during a consolidated return year must file the information statement required by §1.382–2T(a)(2)(ii) because of any owner shift, equity structure shift, or other transaction described in §1.382–2T(a)(2)(i) with respect to the loss subgroup parent and with respect to any subsidiary stock subject to paragraph (c) of this section. Instead of filing a separate statement for each loss subgroup parent, the common parent (which is treated as a loss corporation) may file the single statement described in paragraph (e)(1) of this section. In addition to the information concerning stock ownership of the common parent, the single statement must identify each loss subgroup parent and state which loss subgroups, if any, have had ownership changes during the consolidated return year. The loss subgroup parent is, however, still required to maintain the records necessary to determine if the loss subgroup has an ownership change. This paragraph (e)(2) applies with respect to the attributes of a loss subgroup until, under §1.1502–96(a), the attributes are no longer treated as described in §1.1502–91(d) (relating to the definition of loss subgroup). After that time, the information statement described in paragraph (e)(1) of this section must be filed with respect to those attributes.

[T.D. 8824, 64 FR 36137, July 2, 1999]

§1.1502–93 Consolidated section 382 limitation (or subgroup section 382 limitation).

(a) *Determination of the consolidated section 382 limitation (or subgroup section 382 limitation)*—(1) *In general.* Following an ownership change, the consolidated section 382 limitation (or subgroup section 382 limitation) for any post-change year is an amount equal to the value of the loss group (or loss subgroup), as defined in paragraph (b) of this section, multiplied by the long-term tax-exempt rate that applies with respect to the ownership change, and adjusted as required by section 382 and the regulations thereunder. See, for example, section 382(b)(2) (relating to the carryforward of unused section 382 limitation), section 382(b)(3)(B) (relating to the section 382 limitation for the post-change year that includes the change date), section 382(h) (relating to recognized built-in gains and section 338 gains), and section 382(m)(2) (relating to short taxable years). For special rules relating to the recognized built-in gains of a loss group (or loss subgroup), see paragraph (c)(2) of this section.

(2) *Coordination with apportionment rule.* For special rules relating to apportionment of a consolidated section 382 limitation (or a subgroup section 382 limitation) or net unrealized built-in gain when one or more corporations cease to be members of a loss group (or a loss subgroup) and to aggregation of amounts so apportioned, see §1.1502–95(c).

(b) *Value of the loss group (or loss subgroup)*—(1) *Stock value immediately before ownership change.* Subject to any adjustment under paragraph (b)(2) of this section, the value of the loss group

(or loss subgroup) is the value, immediately before the ownership change, of the stock of each member, other than stock that is owned directly or indirectly by another member. For this purpose—

(i) Ownership is determined under § 1.382–2T;

(ii) A member is considered to indirectly own stock of another member through a nonmember only if the member has a 5-percent or greater ownership interest in the nonmember; and

(iii) Stock includes stock described in section 1504(a)(4) and § 1.382–2T(f)(18)(ii) and (iii).

(2) *Adjustment to value*—(i) *In general.* The value of the loss group (or loss subgroup), as determined under paragraph (b)(1) of this section, is adjusted under any rule in section 382 or the regulations thereunder requiring an adjustment to such value for purposes of computing the amount of the section 382 limitation. See, for example, section 382(e)(2) (redemptions and corporate contractions), section 382(l)(1) (certain capital contributions) and section 382(l)(4) (ownership of substantial nonbusiness assets). For purposes of section 382(e)(2), redemptions and corporate contractions that do not effect a transfer of value outside of the loss group (or loss subgroup) are disregarded. For purposes of section 382(l)(1), capital contributions between members of the loss group (or loss subgroup) (or a contribution of stock to a member made solely to satisfy the loss subgroup parent requirement of paragraph (d)(1)(ii) or (2)(ii) of this section), are not taken into account. Also, the substantial nonbusiness asset test of section 382(l)(4) is applied on a group (or subgroup) basis, and is not applied separately to its members.

(ii) *Anti-duplication.* Appropriate adjustments must be made to the extent necessary to prevent any duplication of the value of the stock of a member, even though corporations that do not file consolidated returns may not be required to make such an adjustment. In making these adjustments, the group (or loss subgroup) may apply the principles of § 1.382–8 (relating to controlled groups of corporations) in determining the value of a loss group (or loss subgroup) even if that section would not apply if separate returns were filed. Also, the principles of § 1.382–5(d) (relating to successive ownership changes and absorption of a section 382 limitation) may apply to adjust the consolidated section 382 limitation (or subgroup section 382 limitation) of a loss group (or loss subgroup) to avoid a duplication of value if there are simultaneous (rather than successive) ownership changes.

(3) *Examples.* The following examples illustrate the principles of this paragraph (b):

Example 1. Basic case. (i) L, L1, and L2 compose a loss group. L has outstanding common stock, the value of which is $100. L1 has outstanding common stock and preferred stock that is described in section 1504(a)(4). L owns 90 percent of the L1 common stock, and A owns the remaining 10 percent of the L1 common stock plus all the preferred stock. The value of the L1 common stock is $40, and the value of the L1 preferred stock is $30. L2 has outstanding common stock, 50 percent of which is owned by L and 50 percent by L1. The L group has an ownership change. The following is a graphic illustration of these facts:

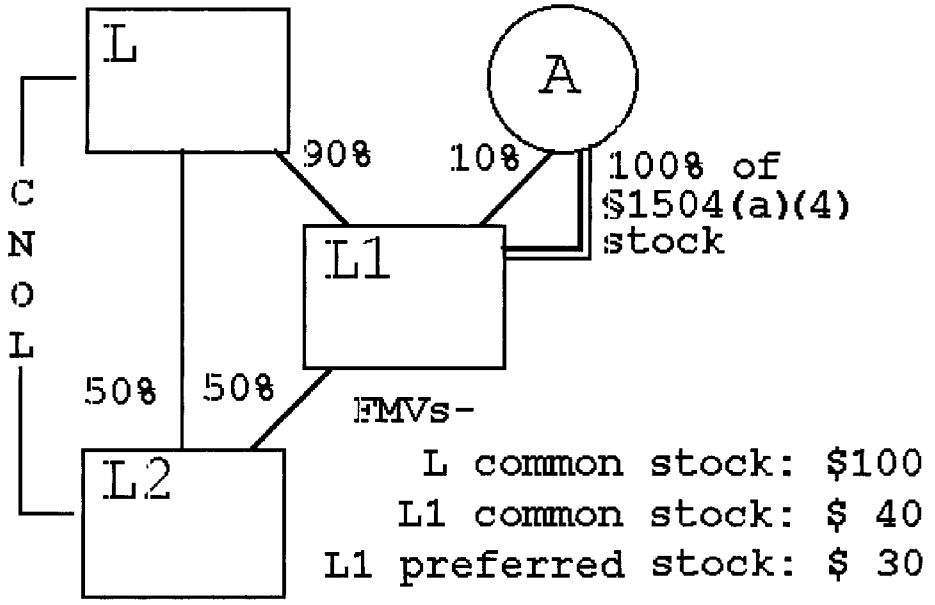

(ii) Under paragraph (b)(1) of this section, the L group does not include the value of the stock of any member that is owned directly or indirectly by another member in computing its consolidated section 382 limitation. Accordingly, the value of the stock of the loss group is $134, the sum of the value of—

(a) The common stock of L ($100);

(b) The 10 percent of the L1 common stock ($4) owned by A; and

(c) The L1 preferred stock ($30) owned by A.

Example 2—Indirect ownership. (i) L and L1 compose a consolidated group. L's stock has a value of $100. L owns 80 shares (worth $80) and corporation M owns 20 shares (worth $20) of the L1 stock. L also owns 79 percent of the stock of corporation M. The L group has an ownership change. The following is a graphic illustration of these facts:

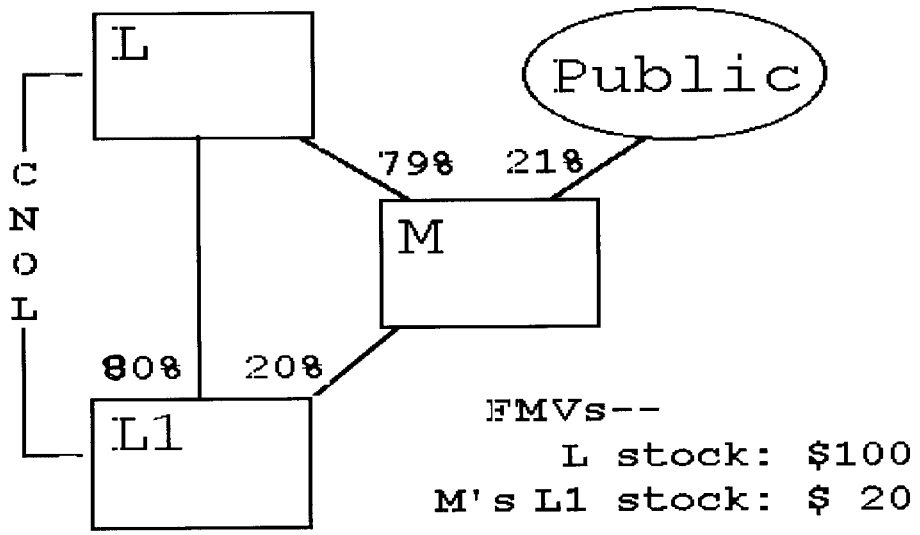

(ii) Under paragraph (b)(1) of this section, because of L's more than 5 percent ownership interest in M, a nonmember, L is considered to indirectly own 15.8 shares of the L1 stock held by M (79% × 20 shares). The value of the L loss group is $104.20, the sum of the values of—

(a) The L stock ($100); and

(b) The L1 stock not owned directly or indirectly by L (21% × $20, or $4.20).

(c) *Recognized built-in gain of a loss group or loss subgroup*—(1) *In general.* If a loss group (or loss subgroup) has a net unrealized built-in gain, any recognized built-in gain of the loss group (or loss subgroup) is taken into account under section 382(h) in determining the consolidated section 382 limitation (or subgroup section 382 limitation).

(2) *Adjustments.* Appropriate adjustments must be made so that any recognized built-in gain of a member that increases more than one section 382 limitation (whether consolidated, subgroup, or separate) does not effect a duplication in the amount of consolidated taxable income that can be offset by pre-change net operating losses. For example, a consolidated section 382 limitation that is increased by recognized built-in gains is reduced to the extent that pre-change net operating losses of a loss subgroup absorb additional consolidated taxable income because the same recognized built-in gains caused an increase in that loss subgroup's section 382 limitation. In addition, recognized built-in gain may not increase the amount of consolidated taxable income that can be offset by recognized built-in losses.

(d) *Continuity of business*—(1) *In general.* A loss group (or a loss subgroup) is treated as a single entity for purposes of determining whether it satisfies the continuity of business enterprise requirement of section 382(c)(1).

(2) *Example.* The following example illustrates the principle of this paragraph (d):

Example. Continuity of business enterprise. L owns all the stock of two subsidiaries, L1 and L2. The L group has an ownership change. It has pre-change consolidated attributes attributable to L2. Each of the members has historically conducted a separate line of business. Each line of business is approximately equal in value. One year after the ownership change, L discontinues its separate business and the business of L2. The separate business of L1 is continued for the remainder of the 2 year period following the ownership change. The continuity of business enterprise requirement of section 382(c)(1) is met even though the separate businesses of L and L2 are discontinued.

(e) *Limitations of losses under other rules.* If a section 382 limitation for a

post-change year exceeds the consolidated taxable income that may be offset by pre-change attributes for any reason, including the application of the limitation of § 1.1502–21(c), the amount of the excess is carried forward under section 382(b)(2) (relating to the carryforward of unused section 382 limitation).

[T.D. 8824, 64 FR 36153, July 2, 1999]

§ 1.1502–94 Coordination with section 382 and the regulations thereunder when a corporation becomes a member of a consolidated group.

(a) *Scope*—(1) *In general*. This section applies section 382 and the regulations thereunder to a corporation that is a new loss member of a consolidated group. A corporation is a new loss member if it—

(i) Carries over a net operating loss that arose (or is treated under § 1.1502–21(c) as arising) in a SRLY with respect to the current group, and that is not described in § 1.1502–91(d)(1); or

(ii) Has a net unrealized built-in loss (determined under paragraph (c) of this section immediately before it becomes a member of the current group by treating that day as a change date) that is not taken into account under § 1.1502–91(d)(2) in determining whether two or more corporations compose a loss subgroup.

(2) *Successor corporation as new loss member*. A new loss member also includes any successor to a corporation that has a net operating loss carryover arising in a SRLY and that is treated as remaining in existence under § 1.382–2(a)(1)(ii) following a transaction described in section 381(a).

(3) *Coordination in the case of a loss subgroup*. For rules regarding the determination of whether there is an ownership change of a loss subgroup with respect to a net operating loss or a net unrealized built-in loss described in § 1.1502–91(d) (relating to the definition of loss subgroup) and the computation of a subgroup section 382 limitation following such an ownership change, see §§ 1.1502–92 and 1.1502–93.

(4) *End of separate tracking of certain losses*. If § 1.1502–96(a) (relating to the end of separate tracking of attributes) applies to a new loss member, then, while that member remains a member of the consolidated group, there is an ownership change with respect to its attributes described in § 1.1502–96(a)(2) only if the consolidated group is a loss group and has an ownership change under § 1.1502–92(b)(1)(i) (or that member has an ownership change under § 1.1502–96(b) (relating to ownership changes of subsidiaries)). If, however, the new loss member has had an ownership change before § 1.1502–96(a) applies, see § 1.1502–96(c) for the continuing application of the section 382 limitation with respect to the member's pre-change losses.

(5) *Cross-reference*. See section 382(a) and § 1.1502–96(c) for the continuing effect of an ownership change after a corporation becomes or ceases to be a member.

(b) *Application of section 382 to a new loss member*—(1) *In general*. Section 382 and the regulations thereunder apply to a new loss member to determine, on a separate entity basis, whether and to what extent a section 382 limitation applies to limit the amount of consolidated taxable income that may be offset by the new loss member's pre-change separate attributes. For example, if an ownership change with respect to the new loss member occurs under section 382 and the regulations thereunder, the amount of consolidated taxable income for any post-change year that may be offset by the new loss member's pre-change separate attributes shall not exceed the section 382 limitation as determined separately under section 382(b) with respect to that member for such year. If the post-change year includes the change date, section 382(b)(3)(A) is applied so that the section 382 limitation of the new loss member does not apply to the portion of the taxable income for such year that is allocable to the period in such year on or before the change date. See generally § 1.382–6 (relating to the allocation of income and loss).

(2) *Adjustment to value*. Appropriate adjustments must be made to the extent necessary to prevent any duplication of the value of the stock of a member, even though corporations that do not file consolidated returns may not be required to make such an adjustment. For example, the principles of

§ 1.1502–93(b)(2)(ii) (relating to adjustments to value) apply in determining the value of a new loss member.

(3) *Pre-change separate attribute defined*. A pre-change separate attribute of a new loss member is—

(i) Any net operating loss carryover of the new loss member described in paragraph (a)(1) of this section; and

(ii) Any recognized built-in loss of the new loss member.

(4) *Examples*. The following examples illustrate the principles of this paragraph (b):

Example 1. Basic case. (i) A and P each own 50 percent of the L stock. On December 19, Year 6, P purchases 30 percent of the L stock from A for cash. L has net operating losses arising in Year 1 and Year 2 that it carries over to Year 6 and Year 7. The following is a graphic illustration of these facts:

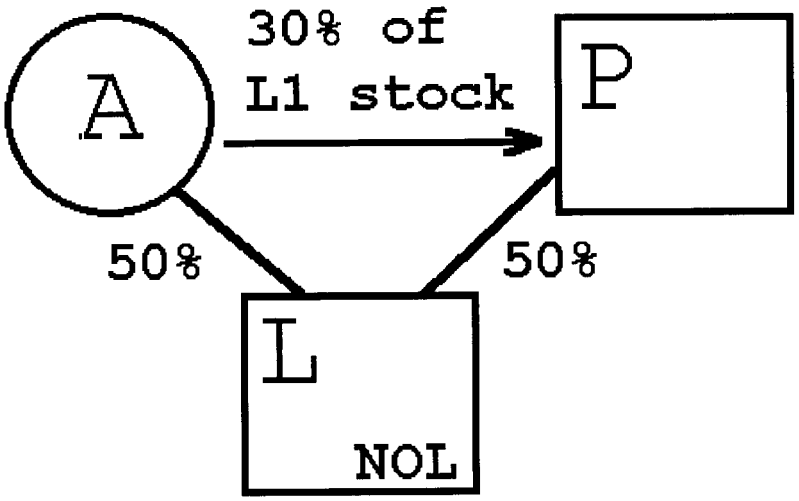

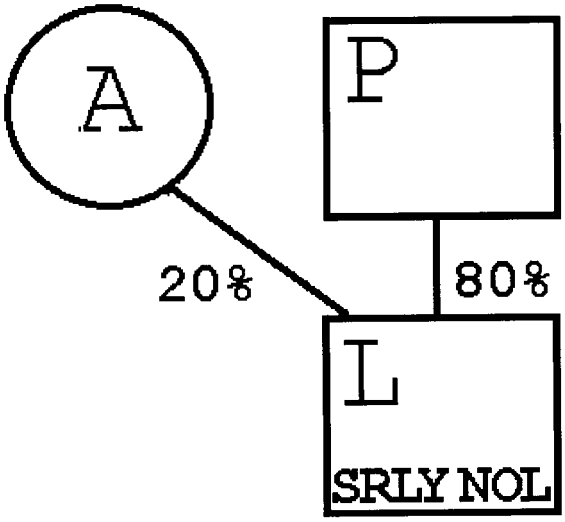

(ii) L is a new loss member because it has net operating loss carryovers that arose in a SRLY with respect to the P group and L is not a member of a loss subgroup under § 1.1502–91(d). Under section 382 and the regulations thereunder, L is a loss corporation on December 19, Year 6, that day is a testing

date for L, and the testing period for L commences on December 20, Year 3.

(iii) P's purchase of L stock does not cause an ownership change of L on December 19, Year 6, with respect to the net operating loss carryovers from Year 1 and Year 2 under section 382 and §1.382–2T. The use of the loss carryovers, however, is subject to limitation under §1.1502–21(c).

Example 2. Multiple new loss members. (i) The facts are the same as in *Example 1*, and, on December 31, Year 6, L purchases all the stock of L1 from B for cash. L1 has a net operating loss of $40 arising in Year 3 that it carries over to Year 7. The following is a graphic illustration of these facts:

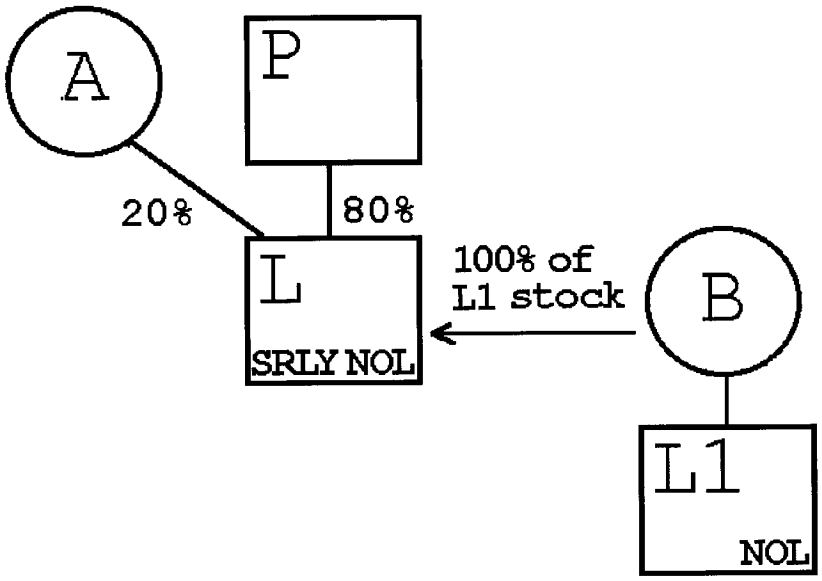

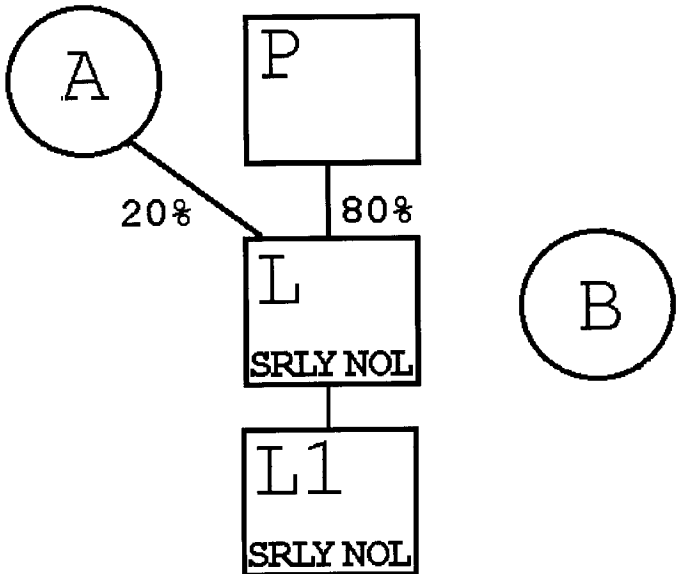

(ii) L1 is a new loss member because it has a net operating loss carryover from Year 3 that arose in a SRLY with respect to the P group and L1 is not a member of a loss subgroup under § 1.1502–91(d)(1).

(iii) L's purchase of all the stock of L1 causes an ownership change of L1 on December 31, Year 6, under section 382 and §1.382–2T. Accordingly, a section 382 limitation based on the value of the L1 stock immediately before the ownership change limits the amount of consolidated taxable income of the P group for any post-change year that may be offset by L1's loss from Year 3.

(iv) L1's ownership change upon becoming a member of the P group is an ownership change described in §1.1502–96(a). Thus, starting on January 1, Year 7, the P group no longer separately tracks owner shifts of the stock of L1 with respect to L1's loss from Year 3, and the P group is a loss group because L1's Year 3 loss is treated as a loss described in §1.1502–91(c).

Example 3. Ownership changes of new loss members. (i) The facts are the same as in Example 2, and, on July 30, Year 7, C purchases all the stock of P for cash.

(ii) L is a new loss member on July 30, Year 7, because its Year 1 and Year 2 losses arose in SRLYs with respect to the P group and it is not a member of a loss subgroup under §1.1502–91(d)(1). The testing period for L commences on August 1, Year 4. C's purchase of all the P stock causes an ownership change of L on July 30, Year 7, under section 382 and §1.382–2T with respect to its Year 1 and Year 2 losses. Accordingly, a section 382 limitation based on the value of the L stock immediately before the ownership change limits the amount of consolidated taxable income of the P group for any post-change year that may be offset by L's Year 1 and Year 2 losses. See §1.1502–21(c) for rules relating to an additional limitation.

(iii) The P group is a loss group on July 30, Year 7, because it is entitled to use L1's loss from Year 3, and such loss is no longer treated as a loss of a new loss member starting the day after L1's ownership change on December 31, Year 6. See §§1.1502–96(a) and 1.1502–91(c)(2). C's purchase of all the P stock causes an ownership change of P, and therefore the P loss group, on July 30, Year 7, with respect to L1's Year 3 loss. Accordingly, a consolidated section 382 limitation based on the value of the P stock immediately before the ownership change limits the amount of consolidated taxable income of the P group for any post-change year that may be offset by L1's Year 3 loss.

(c) *Built-in gains and losses.* As the context may require, the principles of §§1.1502–91(g) and (h) and 1.1502–93(c) (relating to built-in gains and losses) apply to a new loss member on a separate entity basis. See §1.1502–91(g)(4). See §1.1502–13 (including *Example 10* of §1.1502–13(c)(7)) for rules relating to the treatment of intercompany transactions.

(d) *Information statements.* The common parent of a consolidated group that has a new loss member subject to paragraph (b)(1) of this section during a consolidated return year must file the information statement required by §1.382–2T(a)(2)(ii) because of any owner shift, equity structure shift, or other transaction described in §1.382–2T(a)(2)(i). Instead of filing a separate statement for each new loss member, the common parent may file a single statement described in §1.382–2T(a)(2)(ii) with respect to the stock ownership of the common parent (which is treated as a loss corporation). In addition to the information concerning stock ownership of the common parent, the single statement must identify each new loss member and state which new loss members, if any, have had ownership changes during the consolidated return year. The new loss member is, however, required to maintain the records necessary to determine if it has an ownership change. This paragraph (d) applies with respect to the attributes of a new loss member until an event occurs which ends separate tracking under §1.1502–96(a). After that time, the information statement described in §1.1502–92(e)(1) must be filed with respect to these attributes.

[T.D. 8824, 64 FR 36155, July 2, 1999]

§1.1502–95 Rules on ceasing to be a member of a consolidated group (or loss subgroup).

(a) *In general*—(1) *Consolidated group.* This section provides rules for applying section 382 on or after the day that a member ceases to be a member of a consolidated group (or loss subgroup). The rules concern how to determine whether an ownership change occurs with respect to losses of the member, and how a consolidated section 382 limitation (or subgroup section 382 limitation) and a loss group's (or loss subgroup's) net unrealized built-in gain or loss is apportioned to the member. As the context requires, a reference in this section to a loss group, a member, or a corporation also includes a reference to a loss subgroup, and a reference to a consolidated section 382 limitation also includes a reference to a subgroup section 382 limitation.

(2) *Election by common parent.* Only the common parent (not the loss subgroup parent) may make the election under paragraph (c) of this section to apportion a consolidated section 382 limitation (or subgroup section 382 limitation) or a loss group's (or loss subgroup's) net unrealized built-in gain.

(3) *Coordination with §§ 1.1502–91 through 1.1502–93.* For rules regarding the determination of whether there is an ownership change of a loss subgroup and the computation of a subgroup section 382 limitation following such an ownership change, see §§ 1.1502–91 through 1.1502–93.

(b) *Separate application of section 382 when a member leaves a consolidated group*—(1) *In general.* Except as provided in §§ 1.1502–91 through 1.1502–93 (relating to rules applicable to loss groups and loss subgroups), section 382 and the regulations thereunder apply to a corporation on a separate entity basis after it ceases to be a member of a consolidated group (or loss subgroup). Solely for purposes of determining whether a corporation has an ownership change—

(i) Any portion of a consolidated net operating loss that is apportioned to the corporation under § 1.1502–21(b) is treated as a net operating loss of the corporation beginning on the first day of the taxable year in which the loss arose;

(ii) The testing period may include the period during which (or before which) the corporation was a member of the group (or loss subgroup); and

(iii) Except to the extent provided in § 1.1502–96(d) (relating to reattributed losses), the day it ceases to be a member of a consolidated group is treated as a testing date of the corporation within the meaning of § 1.382–2(a)(4).

(2) *Effect of a prior ownership change of the group.* If a loss group has had an ownership change under § 1.1502–92 before a corporation ceases to be a member of a consolidated group (the former member)—

(i) Any pre-change consolidated attribute that is subject to a consolidated section 382 limitation continues to be treated as a pre-change loss with respect to the former member after it is apportioned to the former member and, if any net unrealized built-in loss is allocated to the former member under paragraph (e) of this section, any recognized built-in loss of the former member is a pre-change loss of the member;

(ii) The section 382 limitation with respect to such pre-change attribute is zero unless the common parent, under paragraph (c) of this section, apportions to the former member all or part of the consolidated section 382 limitation applicable to such attribute. The limitation applicable to a pre-change attribute other than a recognized built-in loss may be increased to the extent that the common parent has apportioned all or part of the loss group's net unrealized built-in gain to the former member, and the former member recognizes built-in gain during the recognition period;

(iii) The testing period for determining a subsequent ownership change with respect to such pre-change attribute (or such net unrealized built-in loss, if any) begins no earlier than the first day following the loss group's most recent change date; and

(iv) As generally provided under section 382, an ownership change of the former member that occurs on or after the day it ceases to be a member of a loss group may result in an additional, lesser limitation amount with respect to such losses.

(3) *Application in the case of a loss subgroup.* If two or more former members are included in the same loss subgroup immediately after they cease to be members of a consolidated group, the principles of paragraphs (b), (c) and (e) of this section apply to the loss subgroup. Therefore, for example, an apportionment by the common parent under paragraph (c) of this section is made to the loss subgroup rather than separately to its members. If the common parent of the consolidated group apportions all or part of a limitation (or net unrealized built-in gain) separately to one or more former members that are included in a loss subgroup because the common parent of the acquiring group makes an election under § 1.1502–91(d)(4) with respect to those members, the aggregate of those separate amounts is treated as the amount apportioned to the loss subgroup. Such separate apportionment may occur, for

example, because the election under § 1.1502–91(d)(4) has not been filed at the time that the election of apportionment is made under paragraph (f) of this section.

(4) *Examples*. The following examples illustrate the principles of this paragraph (b):

Example 1. Treatment of departing member as a separate corporation throughout the testing period. (i) A owns all the L stock. L owns all the stock of L1 and L2. The L group has a consolidated net operating loss arising in Year 1 that is carried over to Year 3. On January 12, Year 2, A sells 30 percent of the L stock to B. On February 7, Year 3, L sells 40 percent of the L2 stock to C, and L2 ceases to be a member of the group. A portion of the Year 1 consolidated net operating loss is apportioned to L2 under § 1.1502–21(b) and is carried to L2's first separate return year, which ends December 31, Year 3. The following is a graphic illustration of these facts:

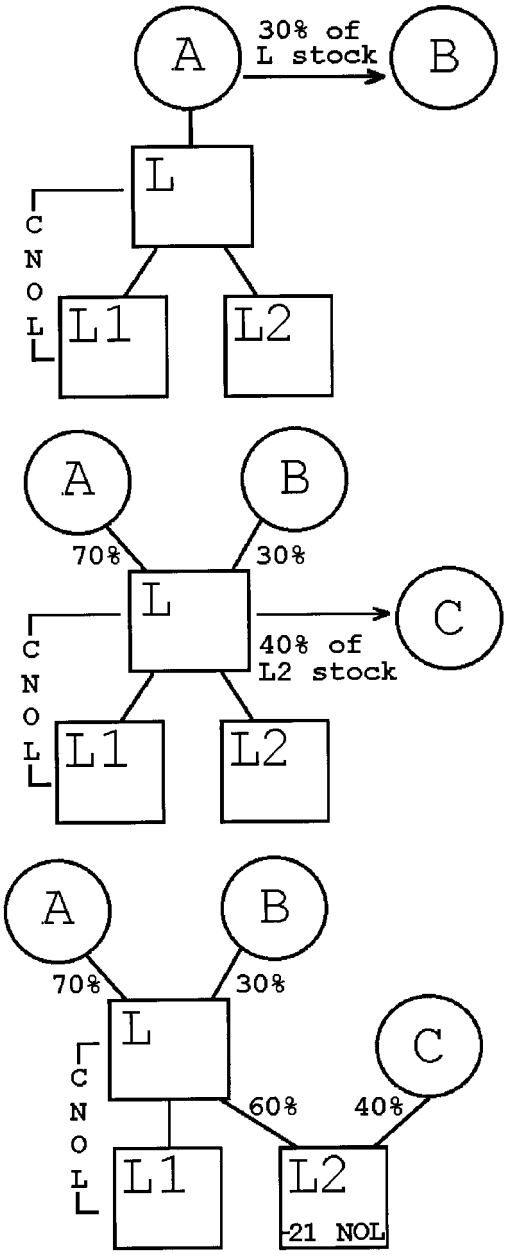

(ii) Under paragraph (b)(1) of this section, L2 is a loss corporation on February 7, Year 3. Under paragraph (b)(1)(iii) of this section, February 7, Year 3, is a testing date. Under paragraph (b)(1)(ii) of this section, the testing period for L2 with respect to this testing date commences on January 1, Year 1, the first day of the taxable year in which the

portion of the consolidated net operating loss apportioned to L2 arose. Therefore, in determining whether L2 has an ownership change on February 7, Year 3, B's purchase of 30 percent of the L stock and C's purchase of 40 percent of the L2 stock are each owner shifts. L2 has an ownership change under section 382(g) and §1.382–2T because B and C have increased their ownership interests in L2 by 18 and 40 percentage points, respectively, during the testing period.

Example 2. Effect of prior ownership change of loss group. (i) L owns all the L1 stock and L1 owns all the L2 stock. The L loss group had an ownership change under §1.1502–92 in Year 2 with respect to a consolidated net operating loss arising in Year 1 and carried over to Year 2 and Year 3. The consolidated section 382 limitation computed solely on the basis of the value of the stock of L is $100. On December 31, Year 2, L1 sells 25 percent of the stock of L2 to B. L2 is apportioned a portion of the Year 1 consolidated net operating loss which it carries over to its first separate return year ending after December 31, Year 2. L2's separate section 382 limitation with respect to this loss is zero unless L elects to apportion all or a part of the consolidated section 382 limitation to L2. (See paragraph (c) of this section for rules regarding the apportionment of a consolidated section 382 limitation.) L apportions $50 of the consolidated section 382 limitation to L2, and the remaining $50 of the consolidated section 382 limitation stays with the loss group composed of L and L1.

(ii) On December 31, Year 3, L1 sells its remaining 75 percent stock interest in L2 to C, resulting in an ownership change of L2. L2's section 382 limitation computed on the change date with respect to the value of its stock is $30. Accordingly, L2's section 382 limitation for post-change years ending after December 31, Year 3, with respect to its pre-change losses, including the consolidated net operating losses apportioned to it from the L group, is $30, adjusted for a short taxable year, carryforward of unused limitation, or any other adjustment required under section 382.

(c) *Apportionment of a consolidated section 382 limitation*—(1) *In general.* The common parent may elect to apportion all or any part of a consolidated section 382 limitation to a former member (or loss subgroup). The common parent also may elect to apportion all or any part of the loss group's net unrealized built-in gain to a former member (or loss subgroup).

(2) *Amount which may be apportioned*—(i) *Consolidated section 382 limitation.* The common parent may apportion all or part of each element of the consolidated section 382 limitation determined under §1.1502–93. For this purpose, the consolidated section 382 limitation consists of two elements—

(A) The value element, which is the element of the limitation determined under section 382(b)(1) (relating to value multiplied by the long-term tax-exempt rate) without regard to such adjustments as those described in section 382(b)(2) (relating to the carryforward of unused section 382 limitation), section 382(b)(3)(B)(relating to the section 382 limitation for the post-change year that includes the change date), section 382(h)(relating to built-in gains and section 338 gains), and section 382(m)(2)(relating to short taxable years); and

(B) The adjustment element, which is so much (if any) of the limitation for the taxable year during which the former member ceases to be a member of the consolidated group that is attributable to a carryover of unused limitation under section 382(b)(2) or to recognized built-in gains under 382(h).

(ii) *Net unrealized built-in gain.* The aggregate amount of the loss group's net unrealized built-in gain that may be apportioned to one or more former members that cease to be members during the same consolidated return year cannot exceed the loss group's excess, immediately after the close of that year, of net unrealized built-in gain over recognized built-in gain, determined under section 382(h)(1)(A)(ii) (relating to a limitation on recognized built-in gain). For this purpose, net unrealized built-in gain apportioned to former members in prior consolidated return years is treated as recognized built-in gain in those years.

(3) Effect of apportionment on the consolidated group—(i) Consolidated section 382 limitation. The value element of the consolidated section 382 limitation for any post-change year ending after the day that a former member (or loss subgroup) ceases to be a member(s) is reduced to the extent that it is apportioned under this paragraph (c). The consolidated section 382 limitation for the post-change year in which the former member (or loss subgroup) ceases to be a member(s) is also

reduced to the extent that the adjustment element for that year is apportioned under this paragraph (c).

(ii) *Net unrealized built-in gain*. The amount of the loss group's net unrealized built-in gain that is apportioned to the former member (or loss subgroup) is treated as recognized built-in gain for a prior taxable year ending in the recognition period for purposes of applying the limitation of section 382(h)(1)(A)(ii) to the loss group's recognition period taxable years beginning after the consolidated return year in which the former member (or loss subgroup) ceases to be a member.

(4) *Effect on corporations to which an apportionment is made*—(i) *Consolidated section 382 limitation*. The amount of the value element that is apportioned to a former member (or loss subgroup) is treated as the amount determined under section 382(b)(1) for purposes of determining the amount of that corporation's (or loss subgroup's) section 382 limitation for any taxable year ending after the former member (or loss subgroup) ceases to be a member(s). Appropriate adjustments must be made to the limitation based on the value element so apportioned for a short taxable year, carryforward of unused limitation, or any other adjustment required under section 382. The adjustment element apportioned to a former member (or loss subgroup) is treated as an adjustment under section 382(b)(2) or section 382(h), as appropriate, for the first taxable year after the member (or members) ceases to be a member (or members).

(ii) *Net unrealized built-in gain*. For purposes of determining the amount by which the former member's (or loss subgroup's) section 382 limitation for any taxable year beginning after the former member (or loss subgroup) ceases to be a member(s) is increased by its recognized built-in gain—

(A) The amount of net unrealized built-in gain apportioned to a former member (or loss subgroup) is treated as if it were an amount of net unrealized built-in gain determined under section 382(h)(1)(A)(i)(without regard to the threshold of section 382(h)(3)(B)) with respect to such member or loss subgroup, and that amount is not reduced under section 382(h)(1)(A)(ii) by the loss group's recognized built-in gain;

(B) The former member's (or loss subgroup's) 5 year recognition period begins on the loss group's change date;

(C) In applying section 382(h)(1)(A)(ii), the former member (or loss subgroup) takes into account only its prior taxable years that begin after it ceases to be a member of the loss group; and

(D) The former member's (or loss subgroup's) recognized built-in gain on the disposition of an asset is determined under section 382(h)(2)(A), treating references to the change date in that section as references to the loss group's change date.

(5) *Deemed apportionment when loss group terminates*. If a loss group terminates, to the extent the consolidated section 382 limitation or net unrealized built-in gain is not apportioned under paragraph (c)(1) of this section, the consolidated section 382 limitation or net unrealized built-in gain is deemed to be apportioned to the loss subgroup that includes the common parent, or, if there is no loss subgroup that includes the common parent immediately after the loss group terminates, to the common parent. A loss group terminates on the first day of the first taxable year that is a separate return year with respect to each member of the former loss group.

(6) *Appropriate adjustments when former member leaves during the year*. Appropriate adjustments are made to the consolidated section 382 limitation for the consolidated return year during which the former member (or loss subgroup) ceases to be a member(s) to reflect the inclusion of the former member in the loss group for a portion of that year.

(7) *Examples*. The following examples illustrate the principles of this paragraph (c):

Example 1. Consequence of apportionment. (i) L owns all the L1 stock and L1 owns all the L2 stock. The L group has a $200 consolidated net operating loss arising in Year 1 that is carried over to Year 2. At the close of December 31, Year 1, the group has an ownership change under §1.1502–92. The ownership change results in a consolidated section 382 limitation of $10 based on the value of the stock of the group. On August 29, Year 2, L1 sells 30 percent of the stock of L2 to A. L2 is

apportioned $90 of the group's $200 consolidated net operating loss under § 1.1502–21(b). L, the common parent, elects to apportion $6 of the consolidated section 382 limitation to L2. The following is a graphic illustration of these facts:

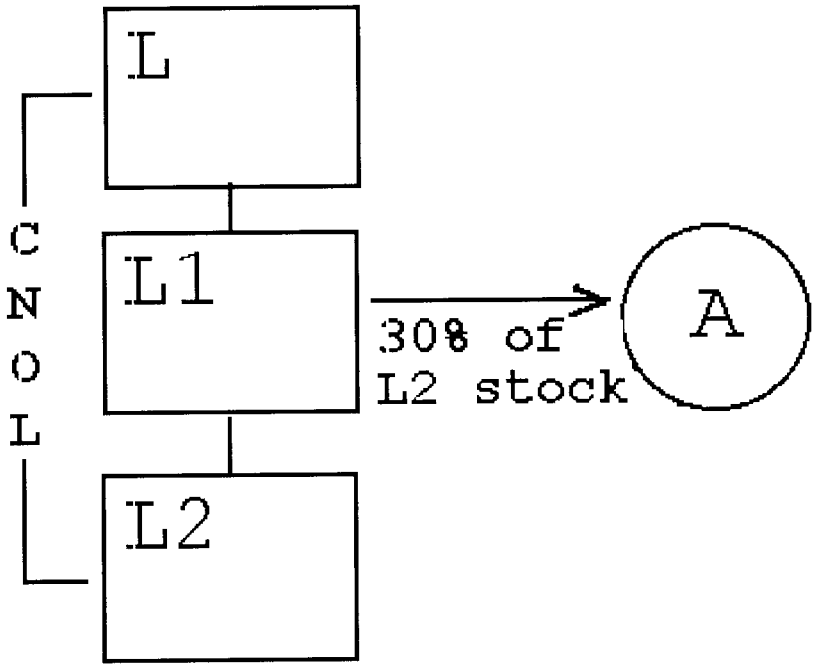

(ii) For its separate return years ending after December 31, Year 2, L2's section 382 limitation with respect to the $90 of the group's net operating loss apportioned to it is $6, adjusted, as appropriate, for any short taxable year, unused section 382 limitation, or other adjustment. For its consolidated return year ending December 31, Year 2 the L group's consolidated section 382 limitation with respect to the remaining $110 of pre-change consolidated attribute is $4 ($10 minus the $6 value element apportioned to L2), adjusted, as appropriate, for any short taxable year, unused section 382 limitation, or other adjustment.

(iii) For the L group's consolidated return year ending December 31, Year 2, the value element of its consolidated section 382 limitation is increased by $4 (rounded to the nearest dollar), to account for the period during which L2 was a member of the L group ($6, the consolidated section 382 limitation apportioned to L2, times 241/365, the ratio of the number of days during Year 2 that L2 is a member of the group to the number of days in the group's consolidated return year). See paragraph (c)(6) of this section. Therefore, the value element of the consolidated section 382 limitation for Year 2 of the L group is $8 (rounded to the nearest dollar).

(iv) The section 382 limitation for L2's short taxable year ending December 31, Year 2, is $2 (rounded to the nearest dollar), which is the amount that bears the same relationship to $6, the value element of the consolidated section 382 limitation apportioned to L2, as the number of days during that short taxable year, 124 days, bears to 365. See § 1.382–5(c).

Example 2. Consequence of no apportionment. The facts are the same as in *Example 1*, except that L does not elect to apportion any portion of the consolidated section 382 limitation to L2. For its separate return years ending after August 29, Year 2, L2's section 382 limitation with respect to the $90 of the group's pre-change consolidated attribute apportioned to L2 is zero under paragraph (b)(2)(ii) of this section. Thus, the $90 consolidated net operating loss apportioned to L2 cannot offset L2's taxable income in any of its separate return years ending after August 29, Year 2. For its consolidated return

years ending after August 29, Year 2, the L group's consolidated section 382 limitation with respect to the remaining $110 of pre-change consolidated attribute is $10, adjusted, as appropriate, for any short taxable year, unused section 382 limitation, or other adjustment.

Example 3. Apportionment of adjustment element. The facts are the same as in *Example 1*, except that L2 ceases to be a member of the L group on August 29, Year 3, and the L group has a $4 carryforward of an unused consolidated section 382 limitation (under section 382(b)(2)) to the Year 3 consolidated return year. The carryover of unused limitation increases the consolidated section 382 limitation for the Year 3 consolidated return year from $10 to $14. L may elect to apportion all or any portion of the $10 value element and all or any portion of the $4 adjustment element to L2.

(d) *Rules pertaining to ceasing to be a member of a loss subgroup*—(1) *In general.* A corporation ceases to be a member of a loss subgroup on the earlier of—

(i) The first day of the first taxable year for which it files a separate return; or

(ii) The first day that it ceases to bear a relationship described in section 1504(a)(1) to the loss subgroup parent (treating for this purpose the loss subgroup parent as the common parent described in section 1504(a)(1)(A)).

(2) *Exceptions.* Paragraph (d)(1)(ii) of this section does not apply to a member of a loss subgroup while that member remains a member of the current group—

(i) If an election under §1.1502–91(d)(4)(relating to treating the subgroup parent requirement as satisfied) applies to the members of the loss subgroup;

(ii) Starting on the day after the change date (but not earlier than the date the loss subgroup becomes a member of the group), if there is an ownership change of the loss subgroup within six months before, on, or after becoming members of the group; or

(iii) Starting the day after the period of 5 consecutive years following the day that the loss subgroup become members of the group during which the loss subgroup has not had an ownership change.

(3) *Examples.* The principles of this paragraph (d) are illustrated by the following examples:

Example 1. Basic case. (i) P owns all the L stock, L owns all the L1 stock and L1 owns all the L2 stock. The P group has a consolidated net operating loss arising in Year 1 that is carried over to Year 2. On December 11, Year 2, P sells all the stock of L to corporation M. Each of L, L1, and L2 is apportioned a portion of the Year 1 consolidated net operating loss, and thereafter each joins with M in filing consolidated returns. Under §1.1502–92, the L loss subgroup has an ownership change on December 11, Year 2. The L loss subgroup has a subgroup section 382 limitation of $100. The following is a graphic illustration of these facts:

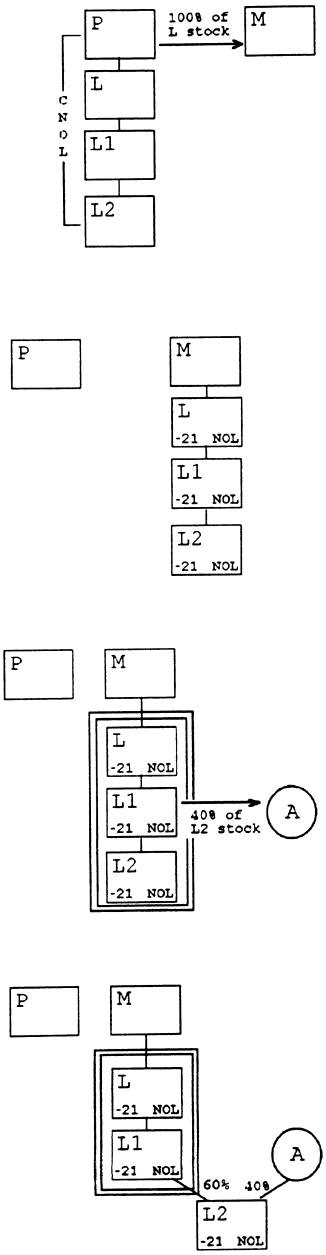

(ii) On May 22, Year 3, L1 sells 40 percent of the L2 stock to A. L2 carries over a portion of the P group's net operating loss from Year 1 to its separate return year ending December 31, Year 3. Under paragraph (d)(1) of this section, L2 ceases to be a member of the L loss subgroup on May 22, Year 3, which is both (1) the first day of the first taxable year

for which it files a separate return and (2) the day it ceases to bear a relationship described in section 1504(a)(1) to the loss subgroup parent, L. The net operating loss of L2 that is carried over from the P group is treated as a pre-change loss of L2 for its separate return years ending after May 22, Year 3. Under paragraphs (a)(2) and (b)(2) of this section, the separate section 382 limitation with respect to this loss is zero unless M elects to apportion all or a part of the subgroup section 382 limitation of the L loss subgroup to L2.

Example 2. Formation of a new loss subgroup. The facts are the same as in *Example 1*, except that A purchases 40 percent of the L1 stock from L rather than purchasing L2 stock from L1. L1 and L2 file a consolidated return for their first taxable year ending after May 22, Year 3, and each of L1 and L2 carries over a part of the net operating loss of the P group that arose in Year 1. Under paragraph (d)(1) of this section, L1 and L2 cease to be members of the L loss subgroup on May 22, Year 3. The net operating losses carried over from the P group are treated as pre-change subgroup attributes of the loss subgroup composed of L1 and L2. The subgroup section 382 limitation with respect to those losses is zero unless M elects to apportion all or part of the subgroup section 382 limitation of the L loss subgroup to the L1 loss subgroup. The following is a graphic illustration of these facts:

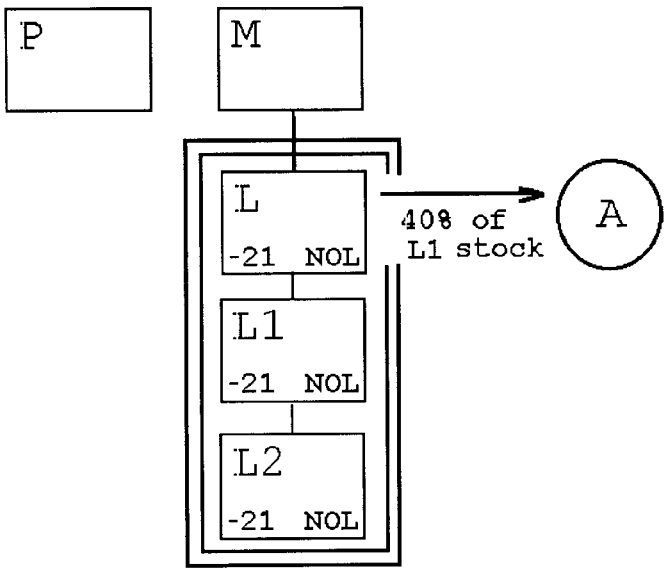

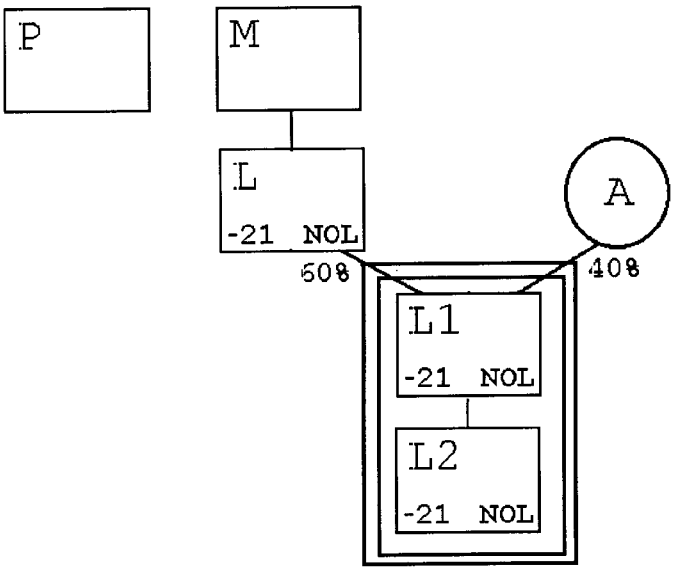

Example 3. Ownership change upon becoming members of the group. (i) A owns all the stock of P, and P owns all the stock of L1 and L2. The P group has a consolidated net operating loss arising in Year 1 that is carried over to Year 3 and Year 4. Corporation M acquires all the stock of P on November 11, Year 3, and P, L1, and L2 thereafter file consolidated

returns with M. M's acquisition results in an ownership change of the P loss subgroup under § 1.1502–92(b)(1)(ii).

(ii) P distributes the L2 stock to M on October 7, Year 4, and L2 ceases to bear the relationship described in section 1504(a)(1) to P, the P loss subgroup parent. However, under paragraph (d)(2) of this section, L2 does not cease to be a member of the P loss subgroup because the P loss subgroup had an ownership change upon becoming members of the M group and L2 remains in the M group.

Example 4. Ceasing to bear a section 1504 (a)(1) to the loss subgroup parent. (i) A owns all the stock of P, and P owns all the stock of L1 and L2. The P group has a consolidated net operating loss arising in Year 1 that is carried over to Year 7. At the close of Year 2, X acquires all of the stock of P, causing an ownership change of the loss subgroup composed of P, L1 and L2 under § 1.1502–92(b)(1)(ii). In Year 4, M, which is owned by the same person that owns X, acquires all of the stock of P, and the M acquisition does not cause a second ownership change of the P loss subgroup.

(ii) P distributes the L2 stock to M on February 3, Year 6 (less than 5 years after the P loss subgroup became members of the M group) and L2 ceases to bear the relationship described in section 1504(a)(1) to P, the loss subgroup parent. Thus, the section 382 limitation from the Year 2 ownership change that applies with respect to the pre-change attributes attributable to L2 is zero except to the extent M elects to apportion all or part of the P loss subgroup section 382 limitation to L2.

Example 5. Relationship through a successor. The facts are the same as in *Example 3,* except that M's acquisition of the P stock does not result in an ownership change of the P loss subgroup, and, instead of P's distributing the stock of L2, L2 merges into L1 on October 7, Year 4. L1 (as successor to L2 in the merger within the meaning of § 1.1502–1(f)(4)) continues to bear a relationship described in section 1504(a)(1) to P, the loss subgroup parent. Thus, L2 does not cease to be a member of the P loss subgroup as a result of the merger.

Example 6. Reattribution of net operating loss carryover under § 1.1502–20(g). The facts are the same as in *Example 3,* except that, instead of distributing the L2 stock to M, P sells that stock to B, and, under § 1.1502–20(g), M reattributes $10 of L2's net operating loss carryover to itself. Under § 1.1502–20(g), M succeeds to the reattributed loss as if the loss were succeeded to in a transaction described in section 381(a). M, as successor to L2, does not cease to be a member of the P loss subgroup.

(e) *Allocation of net unrealized built-in loss*—(1) *In general.* This paragraph (e) provides rules for the allocation of a loss group's (or loss subgroup's) net unrealized built-in loss if a member ceases to be a member of a loss group (or loss subgroup). This paragraph (e) applies if—

(i) A loss group (or loss subgroup) has a net unrealized built-in loss on a change date; and

(ii) Immediately after the close of the consolidated return year in which the departing member ceases to be a member, the amount of the loss group's (or loss subgroup's) excess of net unrealized built-in loss over recognized built-in loss, determined under section 382(h)(1)(B)(ii) (relating to a limitation on recognized built-in loss), is greater than zero. (The amount of such excess is referred to as the remaining NUBIL balance.) In applying section 382(h)(1)(B)(ii) for this purpose, net unrealized built-in loss allocated to departing members in prior consolidated return years is treated as recognized built-in loss in those years.

(2) *Amount of allocation*—(i) *In general.* The amount of net unrealized built-in loss allocated to a departing member is equal to the remaining NUBIL balance, multiplied by a fraction. The numerator of the fraction is the amount of the built-in loss, taken into account on the change date under § 1.1502–91(g), in the assets held by the departing member immediately after the member ceases to be a member of the loss group (or loss subgroup). The denominator of the fraction is the sum of the numerator, plus the amount of the built-in loss, taken into account under § 1.1502–91(g) on the change date, in the assets held by the loss group (or loss subgroup) immediately after the close of the taxable year in which the departing member ceases to be a member. (Fluctuations in value of the assets between the change date and the date that the member ceases to be a member of the group (or loss subgroup), or the close of the taxable year in which the member ceases to be a member of the loss group, are disregarded.) Because the amount of built-in loss on the change date with respect to a departing member's assets is taken into account (rather than that member's separately computed net unrealized built-in loss

on the change date), a departing member can be apportioned all or part of the loss group's net unrealized built-in loss, even if the departing member had a separately computed net unrealized built-in gain on the change date. Amounts taken into account under section 382(h)(6)(C) (relating to certain deduction items) are treated as if they were assets in determining the numerator and denominator of the fraction.

(ii) *Transferred basis property and deferred gain or loss.* For purposes of paragraph (b)(2)(i) of this section, assets held by the departing member immediately after it ceases to be a member of the group (or by other members immediately after the close of the taxable year) include—

(A) Assets held at that time that are transferred basis property that was held by any member of the group (or loss subgroup) on the change date; and

(B) Assets held at that time by any member of the consolidated group with respect to which gain or loss of the group member or loss subgroup member at issue has been deferred in an intercompany transaction and has not been taken into account.

(iii) *Assets for which gain or loss has been recognized.* For purposes of paragraph (b)(2)(i) of this section, assets held by the departing member immediately after it ceases to be a member of the group (or by other members immediately after the close of the taxable year) do not include assets with respect to which gain or loss has previously been recognized and taken into account during the recognition period (including gain or loss recognized in an intercompany transaction and taken into account immediately before the member leaves the group). Appropriate adjustments must be made if gain or loss on an asset has been only partially recognized and taken into account.

(iv) *Exchanged basis property.* The rules of § 1.1502–91(h) apply for purposes of this paragraph (e) (disregarding stock received from the departing member or another member that is a member immediately after the close of the taxable year).

(v) *Two or more members depart during the same year.* If two or more members cease to be members during the same consolidated return year, appropriate adjustments must be made to the denominator of the fraction for each departing member by treating the other departing members as if they had not ceased to be members during that year and as if the assets held by those other departing members immediately after they cease to be members of the group (or loss subgroup) are assets held by the group immediately after the close of the taxable year.

(vi) *Anti-abuse rule.* If assets are transferred between members or a member ceases to be a member with a principal purpose of causing or affecting the allocation of amounts under this paragraph (e), appropriate adjustments must be made to eliminate any benefit of such acquisition, disposition, or allocation.

(3) *Effect of allocation on the consolidated group.* The amount of the net unrealized built-in loss that is allocated to the former member is treated as recognized built-in loss for a prior taxable year ending in the recognition period for purposes applying the limitation of section 382(h)(1)(B)(ii) to a loss group's (or loss subgroup's) recognition period taxable years beginning after the consolidated return year in which the former member ceases to be a member.

(4) *Effect on corporations to which the allocation is made.* For purposes of determining the amount of the former member's recognized built-in losses in any taxable year beginning after the former member ceases to be a member—

(i) The amount of the loss group's (or loss subgroup's) net unrealized built-in loss that is allocated to the former member is treated as if it were an amount of net unrealized built-in loss determined under section 382(h)(1)(B)(i)(without regard to the threshold of section 382(h)(3)(B)) with respect to such member or loss subgroup, and that amount is not reduced under section 382(h)(1)(B)(ii) by the loss group's (or loss subgroup's) recognized built-in losses;

(ii) The former member's 5 year recognition period begins on the loss group's (or loss subgroup's) change date;

(iii) In applying section 382(h)(1)(B)(ii), the former member

takes into account only its prior taxable years that begin after it ceases to be a member of the loss group (or loss subgroup); and

(iv) The former member's recognized built-in loss on the disposition of an asset is determined under section 382(h)(2)(B), treating references to the change date in that section as references to the loss group's (or loss subgroup's) change date.

(5) *Subgroup principles.* If two or more former members are members of the same consolidated group (the second group) immediately after they cease to be members of the current group, the principles of paragraphs (e)(1), (2) and (4) of this section apply to those former members on an aggregate basis. Thus, for example, the amount of net unrealized built-in loss allocated to those members is based on the assets held by those members immediately after they cease to be members of the current group and the limitation of section 382(h)(1)(B)(ii) on recognized built-in losses is applied by taking into account the aggregate amount of net unrealized built-in loss allocated to the former members and the aggregate recognized losses of those members in taxable years beginning after they cease to be members of the current group. If one or more of such members cease to be members of the second group, the principles of this paragraph (e) are applied with respect to those members to allocate to them all or part of any remaining unrecognized amount of net unrealized built-in loss allocated to the members that became members of the second group.

(6) *Apportionment of consolidated section 382 limitation (or subgroup section 382 limitation)*—(i) *In general.* For rules relating to the apportionment of a consolidated section 382 limitation (or subgroup section 382 limitation) to a former member, see paragraph (c) of this section.

(ii) *Special rule for former members that become members of the same consolidated group.* If recognized built-in losses of one or more former members would be subject to a consolidated section 382 limitation (or subgroup section 382 limitation) if recognized immediately before the member (or members) cease to be members of the group, an apportionment of that limitation may be made, under paragraph (c) of this section, to a loss subgroup that includes such member (or members), and the recognized built-in losses (if any) of that member (or members) will be subject to that apportioned limitation. If two or more of such former members are not included in a loss subgroup immediately after they cease to be members of the group (for example, because they do not have net operating loss carryovers or, in the aggregate, a net unrealized built-in loss), but are members of the same consolidated group, an apportionment of the consolidated section 382 limitation (or subgroup section 382 limitation) may be made to them as if they were a loss subgroup.

(7) *Examples.* The following examples illustrate the principles of this paragraph (e):

Example 1. Basic allocation case. (i) P owns all of the stock of L1 and L2. On September 4, Year 1, A purchases all of the P stock, causing an ownership change of the P group. On that date P has two assets (other than the L1 and L2 stock), asset 1 with an adjusted basis of $40 and a fair market value of $15 and asset 2 with an adjusted basis of $50 and a fair market value of $100. L1 has two assets, asset 3 , with a fair market value of $50 and an adjusted basis of $100, and asset 4, with an adjusted basis of $125 and a fair market value of $75. L2 has two assets, asset 5, with a fair market value of $150 and an adjusted basis of $100, and asset 6, with an adjusted basis of $90 and a fair market value of $40. Thus, the P loss group has a net unrealized built-in loss of $75.

(ii) On March 19, Year 3, P sells all of the L2 stock to M. At that time, asset 5, which has appreciated in value, has a fair market value of $250 and an adjusted basis of $100. Asset 6, which has declined in value, has an adjusted basis of $90 and a fair market value of $10.

(iii) On April 8, Year 3, P sells asset 1, and has a recognized built-in loss of $25 that is subject to the P group's section 382 limitation. On November 11, Year 4, L2 sells asset 6 for its then fair market value, $10, recognizing a loss of $80. On June 3, Year 5, L1 sells asset 4, recognizing a loss of $50.

(iv) Immediately after the close of Year 3, the P loss group's remaining NUBIL balance is $50 ($75 net unrealized built-in loss reduced by the $25 recognized built-in loss of P). The portion of the remaining NUBIL balance that is allocated to L2 is $17 (rounded to the nearest dollar). Seventeen dollars is the

product obtained by multiplying $50 (the remaining NUBIL balance) by $50/$150. The numerator of the fraction ($50) is the amount of built-in loss in asset 6, taken into account on the change date under § 1.1502–91(g). The denominator ($150) is the sum of the numerator ($50) and the amount of built-in loss in assets 3 and 4, taken into account on the change date under § 1.1502–91(g) ($100). The built-in loss in asset 1 is not included in the denominator of the fraction because it is not held by the P group immediately after the close of Year 3.

(v) Seventeen dollars of L2's $80 loss on the sale of asset 6 is a recognized built-in loss and subject to a section 382 limitation of zero, unless P apportions some or all of the P group's consolidated section 382 limitation to L2 (adjusted for a short taxable year, carryover of unused limitation, or any other adjustment required under section 382).

(vi) Thirty-three dollars of L1's $50 loss on the sale of asset 4 is subject to the P group's consolidated section 382 limitation, reduced by the amount of such limitation apportioned to L2, and adjusted for any short taxable year, a carryforward of unused limitation, or other adjustment. (In applying section 382(h)(1)(B)(ii) with respect to Year 5, the P group's net unrealized built-in loss is reduced by P's $25 recognized built-in loss in Year 3 and the $17 of net unrealized built-in loss allocated to L2, thus limiting the P group's recognized built-in loss in Year 5 to $33.)

Example 2. Two members depart in the same year. The facts are the same as in *Example 1,* except that P sells all of the stock of L1 to C on November 1, Year 3. The amount of net unrealized built-in loss apportioned to L2 (rounded to the nearest dollar) is $17 ($50 remaining NUBIL balance × $50/$150). The amount of net unrealized built-in loss apportioned to L1 (rounded to the nearest dollar) is $33 ($50 remaining NUBIL balance × $100/$150).

(8) *Reporting requirement.* If a net unrealized built-in loss is allocated under this paragraph (e), the common parent must file a statement with its income tax return for the taxable year in which the former member(s) (or a new loss subgroup that includes that member) ceases to be a member. The statement must provide the name and employer identification number (E.I.N.) of the departing member, the amount of remaining NUBIL balance for the taxable year in which the member departs, and the amount of the net unrealized built-in loss allocated to the departing member. The common parent must also deliver a copy of the statement to the former member on or before the day the group files its income tax return for the consolidated return year that the former member ceases to be a member. A copy of the statement must be attached to the first income tax return of the former member (or the first return in which the former member joins) that is filed after the close of the consolidated return year of the group of which the former member (or a new loss subgroup that includes that member) cease to be a member. This paragraph (e)(8) does not apply if the required information (other than the amount of remaining NUBIL balance) is included in a statement of election under paragraph (f) of this section (relating to apportioning a section 382 limitation).

(f) *Filing the election to apportion the section 382 limitation and net unrealized built-in gain*—(1) *Form of the election to apportion.* An election under paragraph (c) of this section must be made by the common parent. The election must be made in the form of the following statement: ''THIS IS AN ELECTION UNDER § 1.1502–95 OF THE INCOME TAX REGULATIONS TO APPORTION ALL OR PART OF THE [insert THE CONSOLIDATED SECTION 382 LIMITATION, THE SUBGROUP SECTION 382 LIMITATION, THE LOSS GROUP'S NET UNREALIZED BUILT-IN GAIN, THE LOSS SUBGROUP'S NET UNREALIZED BUILT-IN GAIN, as appropriate] TO [insert name and E.I.N. of the corporation (or the corporations that compose a new loss subgroup) to which allocation is made]''. The declaration must also include the following information, as appropriate—

(i) The date of the ownership change that resulted in the consolidated section 382 limitation (or subgroup section 382 limitation) or the loss group's (or loss subgroup's) net unrealized built-in gain;

(ii) The amount of the departing member's (or loss subgroup's) prechange net operating loss carryovers and the taxable years in which they arose that will be subject to the limitation that is being apportioned to that member (or loss subgroup);

(iii) The amount of any net unrealized built-in loss allocated to the departing member (or loss subgroup) under paragraph (e) of this section,

which, if recognized, can be a prechange attribute subject to the limitation that is being apportioned;

(iv) If a consolidated section 382 limitation (or subgroup section 382 limitation) is being apportioned, the amount of the consolidated section 382 limitation (or subgroup section 382 limitation) for the taxable year during which the former member (or new loss subgroup) ceases to be a member of the consolidated group (determined without regard to any apportionment under this section);

(v) If any net unrealized built-in gain is being apportioned, the amount of the loss group's (or loss subgroup's) net unrealized built-in gain (as determined under paragraph (c) (2)(ii) of this section) that may be apportioned to members that ceased to be members during the consolidated return year;

(vi) The amount of the value element and adjustment element of the consolidated section 382 limitation (or subgroup section 382 limitation) that is apportioned to the former member (or new loss subgroup) pursuant to paragraph (c) of this section;

(vii) The amount of the loss group's (or loss subgroup's) net unrealized built-in gain that is apportioned to the former member (or new loss subgroup) pursuant to paragraph (c) of this section;

(viii) If the former member is allocated any net unrealized built-in loss under paragraph (e) of this section, the amount of any adjustment element apportioned to the former member that is attributable to recognized built-in gains (determined in a manner that will enable both the group and the former member to apply the principles of § 1.1502–93(c));

(ix) The name and E.I.N. of the common parent making the apportionment.

(2) *Signing of the election*. The election statement must be signed by both the common parent and the former member (or, in the case of a loss subgroup, the common parent and the loss subgroup parent) by persons authorized to sign their respective income tax returns. If the allocation is made to a loss subgroup for which an election under § 1.1502–91(d)(4) is made, and not separately to its members, the election statement under this paragraph (e) must be signed by the common parent and any member of the new loss subgroup by persons authorized to sign their respective income tax returns.

(3) *Filing of the election*. The election statement must be filed by the common parent of the group that is apportioning the consolidated section 382 limitation (or the subgroup section 382 limitation) or the loss group's net unrealized built-in gain (or loss subgroup's net unrealized built-in gain) with its income tax return for the taxable year in which the former member (or new loss subgroup) ceases to be a member. The common parent must also deliver a copy of the statement to the former member (or the members of the new loss subgroup) on or before the day the group files its income tax return for the consolidated return year that the former member (or new loss subgroup) ceases to be a member. A copy of the statement must be attached to the first return of the former member (or the first return in which the members of a new loss subgroup join) that is filed after the close of the consolidated return year of the group of which the former member (or the members of a new loss subgroup) ceases to be a member.

(4) *Revocation of election*. An election statement made under paragraph (c) of this section is revocable only with the consent of the Commissioner.

[T.D. 8824, 64 FR 36159, July 2, 1999]

§ 1.1502–96 Miscellaneous rules.

(a) *End of separate tracking of losses*—(1) *Application*. This paragraph (a) applies to a member (or a loss subgroup) with a net operating loss carryover that arose (or is treated under § 1.1502–21(c) as arising) in a SRLY, or a member (or loss subgroup) with a net unrealized built-in loss determined at the time that the member (or loss subgroup) becomes a member of the consolidated group if there is—

(i) An ownership change of the member (or loss subgroup) within six months before, on, or after becoming a member of the group; or

(ii) A period of 5 consecutive years following the day that the member (or loss subgroup) becomes a member of a group during which the member (or

loss subgroup) has not had an ownership change.

(2) *Effect of end of separate tracking*—(i) *Net operating loss carryovers.* If this paragraph (a) applies with respect to a member (or loss subgroup) with a net operating loss carryover, then, starting on the day after the earlier of the change date (but not earlier than the day the member (or loss subgroup) becomes a member of the consolidated group) or the last day of the 5 consecutive year period described in paragraph (a)(1)(ii) of this section, such loss carryover is treated as described in §1.1502–91(c)(1)(i). The preceding sentence also applies for purposes of determining whether there is an ownership change with respect to such loss carryover following such change date or 5 consecutive year period. Thus, for example, starting the day after the change date (but not earlier than the day the member (or loss subgroup) becomes a member of the consolidated group) or the end of the 5 consecutive year period—

(A) The consolidated group which includes the new loss member or loss subgroup is no longer required to separately track owner shifts of the stock of the new loss member or subgroup parent to determine if an ownership change occurs with respect to the loss carryover of the new loss member or members included in the loss subgroup;

(B) The group is a loss group because the member's loss carryover is treated as a loss described in §1.1502–91(c)(1)(i);

(C) There is an ownership change with respect to such loss carryover only if the group has an ownership change; and

(D) If the group has an ownership change, such loss carryover is a pre-change consolidated attribute subject to the loss group's consolidated section 382 limitation.

(ii) *Net unrealized built-in losses.* If this paragraph (a) applies with respect to a new loss member described in §1.1502–94(a)(1)(ii) (or a loss subgroup described in §1.1502–91(d)(2)) then, starting on the day after the earlier of the change date (but not earlier than the day the member (or loss subgroup) becomes a member of the group) or the last day of the 5 consecutive year period described in paragraph (a)(1)(ii) of this section, the member (or members of the loss subgroup) are treated, for purposes of applying §1.1502–91(g)(2)(ii), as if they have been affiliated with the common parent for 5 consecutive years. Starting on that day, the member's (or the members of the loss subgroup's) separately computed net unrealized built-in loss is included in the determination whether the group has a net unrealized built-in loss, and there is an ownership change with respect to the member's separately computed net unrealized built-in loss only if the group (including the member) has a net unrealized built-in loss and has an ownership change. Thus, for example, starting the day after the change date (but not earlier than the day the member (or loss subgroup) becomes a member of the consolidated group), or the end of the 5 consecutive period

(A) The consolidated group which includes the new loss member or loss subgroup is no longer required to separately track owner shifts of the stock of the new loss member or subgroup parent to determine if an ownership change occurs with respect to the net unrealized built-in loss of the new loss member or members of the loss subgroup;

(B) The group includes the member's (or the loss subgroup members') separately computed net unrealized built-in loss in determining whether it is a loss group under §1.1502–91(c)(1)(iii);

(C) There is an ownership change with respect to such net unrealized built-in loss only if the group is a loss group and has an ownership change; and

(D) If the group has an ownership change, the member's separately computed net unrealized built-in loss and its assets are taken into account in determining the group's pre-change consolidated attributes described in §1.1502–91(e)(1) (relating to recognized built-in losses) that are subject to the group's consolidated section 382 limitation.

(iii) *Common parent not common parent for five years.* If the common parent has become the common parent of an existing group within the previous 5-year period in a transaction described in §1.1502–75(d)(2)(ii) or (3), appropriate adjustments must be made in applying

paragraphs (a)(2)(ii) and (3) of this section. In such a case, as the context requires, references to the common parent are to the former common parent.

(3) *Continuing effect of end of separate tracking*—(i) *In general*. As the context may require, a current group determines which of its members are included in a loss subgroup on any testing date by taking into account the application of this section in the former group. See the example in § 1.1502–91(f)(2). For this purpose, corporations that are treated under paragraph (a)(2)(ii) of this section as having been affiliated with the common parent of the former group for 5 consecutive years are also treated as having been affiliated with any other members that have been (or are treated as having been) affiliated with the common parent. The corporations are treated as having been affiliated with such other members for the same period of time that those members have been (or are treated as having been) affiliated with the common parent. If two or more corporations become members of the group at the same time, but paragraph (a)(1) of this section does not apply to every such corporation, then immediately after the corporations become members of the group, the corporations to which paragraph (a)(1) of this section applied are treated as not having been previously affiliated, for purposes of applying this paragraph (a)(3), with the corporations to which paragraph (a)(2)(ii) of this section did not apply.

(ii) *Example*. The following example illustrates the principles of this paragraph (a)(3):

Example. (i) L has owned all the stock of L1 for three years. At the close of December 31, Year 1, the M group purchases all the L stock, and L and L1 become members of the M group. Other than the stock of L1, L has one asset (the L loss asset) with a net unrealized built-in loss of $200 on this date. L1 has one asset with a net unrealized built-in gain of $50 (the L1 gain asset). L and L1 do not compose a loss subgroup because they do not meet the five year affiliation requirement of § 1.1502–91(d)(2)(i). L is a new loss member, and M's purchase of L causes an ownership change of L. At the close of December 31, Year 4, at a time when L1 has been affiliated with the M group for three years and has been affiliated with L for six years, the S group purchases all the M stock. On this date, the L loss asset has a net unrealized built-in loss of $300, the L1 gain asset has a net unrealized built-in gain of $80, and M, the common parent of the M group, has one asset with a net unrealized built-in gain of $200.

(ii) Paragraph (a)(1) of this section applies to L because L is a new loss member described in § 1.1502–94(a)(1)(ii) that has an ownership change upon becoming a member of the M group on December 31, Year 1. Accordingly, L is treated as having been affiliated with M for 5 consecutive years, and the L loss asset with a net unrealized built-in loss of $300 is included in the determination whether the M group has a net unrealized built-in loss.

(iii) The S group determines which of its members are included in a loss subgroup by taking into account application of paragraph (a) of this section in the M group. For this purpose, application of paragraph (a) of this section causes L to be treated as having been affiliated with M (or as having been a member of the M group) for 5 consecutive years as of January 1, Year 2. Therefore, the S group includes L in the determination whether the M subgroup acquired by S on December 31, Year 4, has a net unrealized built-in loss.

(iv) Because paragraph (a)(1) of this section applied to L when L became a member of the M group, but did not apply to L1, L is treated as not having been affiliated with L1 before L and L1 joined the M group. Also, L1 is not included in the determination whether the M subgroup has a net unrealized built-in loss because L1 has not been continuously affiliated with members of the M group for the five consecutive year period ending immediately before they become members of the S group. See § 1.1502–91(g)(2).

(4) *Special rule for testing period*. For purposes of determining the beginning of the testing period for a loss group, the member's (or loss subgroup's) net operating loss carryovers (or net unrealized built-in loss) described in paragraph (a)(2) of this section are considered to arise—

(i) In a case described in paragraph (a)(1)(i) of this section, in a taxable year that begins not earlier than the later of the day following the change date or the day that the member becomes a member of the group; and

(ii) In a case described in paragraph (a)(1)(ii) of this section, in a taxable year that begins 3 years before the end of the 5 consecutive year period.

(5) *Limits on effects of end of separate tracking*. The rule contained in this paragraph (a) applies solely for purposes of §§ 1.1502–91 through 1.1502–95 and this section (other than paragraph

(b)(2)(ii)(B) of this section (relating to the definition of pre-change attributes of a subsidiary)) and § 1.1502–98, and not for purposes of other provisions of the consolidated return regulations. However, the rule contained in this paragraph (a) does apply in §§ 1.1502–15(g), 1.1502–21(g) and 1.1502–22(g) for purposes of determining the composition of loss subgroups defined in § 1.1502–91(d). See also paragraph (c) of this section for the continuing effect of an ownership change with respect to pre-change attributes.

(b) *Ownership change of subsidiary*—(1) *Ownership change of a subsidiary because of options or plan or arrangement.* Notwithstanding § 1.1502–92, a subsidiary may have an ownership change for purposes of section 382 with respect to its attributes which a group or loss subgroup includes in making a determination under § 1.1502–91(c)(1) (relating to the definition of loss group) or § 1.1502–91(d) (relating to the definition of loss subgroup). The subsidiary has such an ownership change if it has an ownership change under the principles of § 1.1502–95(b) and section 382 and the regulations thereunder (determined on a separate entity basis by treating the subsidiary as not being a member of a consolidated group) in the event of—

(i) The deemed exercise under § 1.382–4(d) of an option or options (other than an option with respect to stock of the common parent) held by a person (or persons acting pursuant to a plan or arrangement) to acquire more than 20 percent of the stock of the subsidiary; or

(ii) An increase by 1 or more 5-percent shareholders, acting pursuant to a plan or arrangement to avoid an ownership change of a subsidiary, in their percentage ownership interest in the subsidiary by more than 50 percentage points during the testing period of the subsidiary through the acquisition (or deemed acquisition pursuant to § 1.382–4(d)) of ownership interests in the subsidiary and in higher-tier members with respect to the subsidiary.

(2) *Effect of the ownership change*—(i) *In general.* If a subsidiary has an ownership change under paragraph (b)(1) of this section, the amount of consolidated taxable income for any post-change year that may be offset by the pre-change losses of the subsidiary shall not exceed the section 382 limitation for the subsidiary. For purposes of this limitation, the value of the subsidiary is determined solely by reference to the value of the subsidiary's stock.

(ii) *Pre-change losses.* The pre-change losses of a subsidiary are—

(A) Its allocable part of any consolidated net operating loss which is attributable to it under § 1.1502–21(b) (determined on the last day of the consolidated return year that includes the change date) that is not carried back and absorbed in a taxable year prior to the year including the change date;

(B) Its net operating loss carryovers that arose (or are treated under § 1.1502–21(c) as having arisen) in a SRLY; and

(C) Its recognized built-in loss with respect to its separately computed net unrealized built-in loss, if any, determined on the change date.

(3) *Coordination with §§ 1.1502–91, 1.1502–92, and 1.1502–94.* If an increase in percentage ownership interest causes an ownership change with respect to an attribute under this paragraph (b) and under § 1.1502–92 on the same day, the ownership change is considered to occur only under § 1.1502–92 and not under this paragraph (b). See § 1.1502–94 for anti-duplication rules relating to value.

(4) *Example.* The following example illustrates paragraph (b)(1)(ii) of this section:

Example. Plan to avoid an ownership change of a subsidiary. (i) L owns all the stock of L1, L1 owns all the stock of L2, L2 owns all the stock of L3, and L3 owns all the stock of L4. The L group has a consolidated net operating loss arising in Year 1 that is carried over to Year 2. L has assets other than its L1 stock with a value of $900. L1, L2, and L3 own no assets other than their L2, L3, and L4 stock. L4 has assets with a value of $100. During Year 2, A, B, C, and D, acting pursuant to a plan to avoid an ownership change of L4, acquire the following ownership interests in the members of the L loss group: (A) on September 11, Year 2, A acquires 20 percent of the L1 stock from L and B acquires 20 percent of the L2 stock from L1; and (B) on September 20, Year 2, C acquires 20 percent of the stock of L3 from L2 and D acquires 20 percent of the stock of L4 from L3.

(ii) The acquisitions by A, B, C, and D pursuant to the plan have increased their respective percentage ownership interests in L4 by approximately 10, 13, 16, and 20 percentage points, for a total of approximately 59 percentage points during the testing period. This more than 50 percentage point increase in the percentage ownership interest in L4 causes an ownership change of L4 under paragraph (b)(2) of this section.

(c) *Continuing effect of an ownership change.* A loss corporation (or loss subgroup) that is subject to a limitation under section 382 with respect to its pre-change losses continues to be subject to the limitation regardless of whether it becomes a member or ceases to be a member of a consolidated group. See §1.382–5(d) (relating to successive ownership changes and absorption of a section 382 limitation).

(d) *Losses reattributed under §1.1502–20(g)*—(1) *In general.* This paragraph (d) contains rules relating to net operating carryovers that are reattributed to the common parent under §1.1502–20(g). References in this paragraph (d) to a subsidiary are references to the subsidiary (or lower tier subsidiary) whose net operating loss carryover is reattributed to the common parent.

(2) *Deemed section 381(a) transaction.* Under §1.1502–20 (g)(1), the common parent succeeds to the reattributed losses as if the losses were succeeded to in a transaction described in section 381(a). In general, §§1.1502–91 through 1.1502–95, this section, and §1.1502–98 are applied to the reattributed net operating loss carryovers in accordance with that characterization. See generally, §1.382–2(a)(1)(ii) (relating to distributor or transferor loss corporations in transactions under section 381), §1.1502–(1)(f)(4) (relating to the definition of predecessor and successor) and §1.1502–91(j) (relating to predecessor and successor corporations). For example, if the reattributed net operating loss carryover is a pre-change attribute subject to a section 382 limitation, it remains subject to that limitation following the reattribution. In certain cases, the limitation applicable to the reattributed loss is zero unless the common parent apportions all or part of the limitation to itself. (See paragraph (d)(4) of this section.)

(3) *Rules relating to owner shifts*—(i) *In general.* Any owner shift of the subsidiary (including any deemed owner shift resulting from section 382(g)(4)(D) or 382(l)(3)) in connection with the disposition of the stock of the subsidiary is not taken into account in determining whether there is an ownership change with respect to the reattributed net operating loss carryover. However, any owner shift with respect to the successor corporation that is treated as continuing in existence under §1.382–2(a)(1)(ii) must be taken into account for such purpose if such owner shift is effected by the reattribution and an owner shift of the stock of the subsidiary not held directly or indirectly by the common parent would have been taken into account if such shift had occurred immediately before the reattribution. See paragraph (d)(3)(ii) *Example 2* of this section.

(ii) *Examples.* The following examples illustrate the principles of this paragraph (d)(3):

Example 1. No owner shift for reattributed loss. (i) P, the common parent of a consolidated group, owns 60% of the stock of L, and B owns the remaining 40%. L has a net operating loss carryover of $100 from year 1 that it carries over to Years 2, 3, and 4. At the beginning of Year 2, P purchases 40% of the L stock from B, which does not cause an ownership change of L. On December 31, Year 3, P sells all of the L stock to M. Pursuant to §1.1502–20(g), P reattributes $10 of L's $100 net operating loss carryover to itself, and L carries $90 of its net operating loss carryover to its Year 4.

(ii) The sale of the L stock to M does not cause an owner shift that is taken into account in determining if there is an ownership change with respect to the $10 reattributed loss. Following the reattribution, §1.1502–94(b) continues to apply to determine if there is an ownership change with respect to the $10 reattributed loss, until, under paragraph (a) of this section, the loss is treated as described in §1.1502–91(c)(1)(i). In applying §1.1502–94(b), the 40 percentage point increase by the P shareholders prior to the reattribution is taken into account. The sale of the L stock to M does cause an ownership change of L with respect to the $90 of its net operating loss that it carries over to Year 4.

Example 2. Owner shift for reattributed loss. The facts are the same as in *Example 1*, except that P only purchases 20% of the L stock from B and sells 80% of the L stock to M. L is a new loss member, and, under §1.1502–94(b)(1), an owner shift of the stock of L not held directly or indirectly by the common parent (the 20% of L stock still held by B) would have been taken into account if

such shift had occurred immediately before the reattribution. Following the reattribution, §1.1502–94(b) continues to apply to determine if there is an ownership change with respect to the $10 reattributed loss, until, under paragraph (a) of this section, the loss is treated as described in §1.1502–91(c)(1)(i). With respect to the $10 reattributed loss, the P shareholders have increased their percentage ownership interest by 40 percentage points. The P shareholders have increased their ownership interests by 20 percentage points as a result of P's purchase of stock from B, and, under §1.382–2(a)(1)(ii), are treated as increasing their interests by an additional 20 percentage points as a result of the reattribution. (The acquisition of the L stock by M does not, however, effect an owner shift for the $10 of reattributed loss.) The sale of the L stock to M causes an ownership change of L with respect to the $90 of net operating loss that L carries over to Year 4.

(4) *Rules relating to the section 382 limitation*—(i) *Reattributed loss is a pre-change separate attribute of a new loss member*. If the reattributed net operating loss carryover is a pre-change separate attribute of a new loss member that is subject to a separate section 382 limitation prior to the disposition of subsidiary stock, the common parent's limitation with respect to that loss is zero, except to the extent that the common parent apportions to itself, under paragraph (d)(5) of this section, all or part of such limitation. A separate section 382 limitation is the limitation described in §1.1502–94(b) that applies to a pre-change separate attribute.

(ii) *Reattributed loss is a pre-change subgroup attribute*. If the reattributed net operating loss carryover is a pre-change subgroup attribute subject to a subgroup section 382 limitation prior to the disposition of subsidiary stock, and, immediately after the reattribution, the common parent is not a member of the loss subgroup, the section 382 limitation with respect to that net operating loss carryover is zero, except to the extent that the common parent apportions to itself, under paragraph (d)(5) of this section, all or part of the subgroup section 382 limitation. See, however, §1.1502–95(d)(3) *Example 6*, for an illustration of a case where the common parent, as successor to the subsidiary, is a member of the loss subgroup immediately after the reattribution.

(iii) *Potential application of section 382(l)(1)*. In general, the value of the stock of the common parent is used to determine the section 382 limitation for an ownership change with respect to the reattributed net operating loss carryover that occurs at the time of, or after, the reattribution. For example, if the net operating loss carryover is a pre-change consolidated attribute, the value of the stock of the common parent is used to determine the section 382 limitation, and no adjustment to that value is required because of the deemed section 381(a) transaction. However, if the net operating loss carryover is a pre-change separate attribute of a new loss member (or is a pre-change attribute of a loss subgroup member and the common parent was not the loss subgroup parent immediately before the reattribution), the deemed section 381(a) transaction is considered to constitute a capital contribution with respect to the new loss member (or loss subgroup member) for purposes of section 382(l)(1). Accordingly, if that section applies because the deemed capital contribution is (or is considered under section 382(l)(1)(B) to be) part of a plan described in section 382(l)(1)(A), the value of the stock of the common parent after the deemed section 381(a) transaction must be adjusted to reflect the capital contribution. Ordinarily, this will require the value of the stock of the common parent to be reduced to an amount that represents the value of the stock of the subsidiary (or loss subgroup of which the subsidiary was a member) when the reattribution occurred.

(iv) *Duplication or omission of value*. In determining any section 382 limitation with respect to the reattributed net operating loss carryover and with respect to other pre-change losses, appropriate adjustments must be made so that value is not improperly omitted or duplicated as a result of the reattribution. For example, if the subsidiary has an ownership change upon its departure, and the common parent (as successor) has an ownership change with respect to the reattributed pre-change separate attribute upon its reattribution under paragraph (d)(3)(i) of this

section, proper adjustments must be made so that the value of the subsidiary is not taken into account more than once in determinining the section 382 limitation for the reattributed loss and the loss that is not reattributed.

(v) *Special rule for continuity of business requirement*. If the reattributed net operating loss carryover is a pre-change attribute of new loss member and the reattribution occurs within the two year period beginning on the change date, then, starting immediately after the reattribution, the continuity of business requirement of section 382(c)(1) is applied with respect to the business enterprise of the common parent. Similar principles apply if the reattributed net operating loss carryover is a pre-change subgroup attribute and, on the day after the reattribution, the common parent is not a member of the loss subgroup.

(5) *Election to reattribute section 382 limitation*—(i) *Effect of election*. The common parent may elect to apportion to itself all or part of any separate section 382 limitation or subgroup section 382 limitation to which the net operating loss carryover is subject immediately before the reattribution. However, no net unrealized built-in gain of the member (or loss subgroup) whose net operating loss carryover is reattributed can be apportioned to the common parent. The principles of §1.1502–95(c) apply to the apportionment, treating, as the context requires, references to the former member as references to the common parent, and references to the consolidated section 382 limitation as references to the separate section 382 limitation (or subgroup section 382 limitation) that is being apportioned. Thus, for example, the common parent can reattribute to itself all or part of the value element or adjustment element of the limitation, and any part of such element that is apportioned requires a corresponding reduction in such element of the separate section 382 limitation of the subsidiary whose net operating loss carryover is reattributed (or in the subgroup section 382 limitation if the reattributed loss is a pre-change subgroup attribute). Appropriate adjustments must be made to the separate section 382 limitation (or subgroup section 382 limitation) for the consolidated return year in which the reattribution is made to reflect that the reattributed net operating loss carryover is an attribute acquired by the common parent during the year in a transaction to which section 381(a) applies. The election is made by the common parent as part of the election to reattribute the net operating loss carryover. See §1.1502–20(g)(4) for the time and manner of making the election.

(ii) *Examples*. The following examples illustrate the principles of this paragraph (d)(5):

Example 1. Consequence of apportionment. (i) P, the common parent of a consolidated group, purchases all of the stock of L on December 31, Year 1. L carries over a net operating loss arising in Year 1 to each of the next 5 taxable years. The purchase of the L stock causes an ownership change of L, and results in a separate section 382 limitation of $10 for L's net operating loss carryover based on the value of the L stock. On July 2, Year 3, P sells 30 percent of the L stock to A. Under §1.1502–20(g), P elects to apportion to itself $110 of L's $200 net operating loss carryover. P also elects to apportion to itself $6 of the $10 value element of the separate section 382 limitation.

(ii) For the consolidated return years ending after December 31, Year 3, P's separate section 382 limitation with respect to the reattributed net operating loss carryover is $6, adjusted as appropriate for any short taxable year, unused section 382 limitation, or other adjustment. For the P group's consolidated return year ending December 31, Year 3, the separate section 382 limitation for L's net operating loss carryover is $8, the sum of $5 and $3. Five dollars of the limitation is the amount that bears the same relationship to $10 as the number of days in the period ending with the deemed section 381(a) transaction, 183 days, bears to 365. Three dollars of the limitation is the amount that bears the same relationship to $6 as the number of days in the period between July 3 and December 31, 182, bears to 365.

(iii) For L's taxable years ending after December 31, Year 3, L's separate section 382 limitation for its $90 of net operating loss carryover that was not reattributed to P is $4, adjusted as appropriate for any short taxable year, unused section 382 limitation, or other adjustment. For L's short taxable year ending December 31, Year 3, the section 382 limitation for its $90 of net operating loss carryover is $2, the amount that bears the same relationship to $4 (the portion of the value element that was not apportioned to P), as the number of days during the short

taxable year, 182 days, bears to 365. See § 1.382–5(c).

Example 2. No apportionment required for consolidated pre-change attribute. (i) P, the common parent of a consolidated group, forms L. For Year 1, L has an operating loss of $70 that is not absorbed and is included in the group's consolidated net operating loss that is carried over to subsequent years. On January 1 of Year 3, A buys all of the P stock and the P group has an ownership change. The consolidated section 382 limitation based on the value of the P stock is $10.

(ii) On April 13 of Year 4, P sells all of the stock of L to B and, under § 1.1502–20(g), elects to reattribute to itself $45 of L's net operating loss carryover. Following the reattribution, the $45 portion of the Year 1 net operating loss carryover retains its character as a pre-change consolidated attribute, and remains subject to so much of the $10 consolidated section 382 limitation as P does not elect to apportion to L under § 1.1502–95(c).

(e) *Time and manner of making election under § 1.1502–91(d)(4)*—(1) *In general.* This paragraph (e) prescribes the time and manner of making the election under § 1.1502–91(d)(4), relating to treating two or more corporations as treating the section 1504(a)(1) requirement of § 1.1502–91(d)(1)(ii) and (d)(2)(ii) as satisfied.

(2) *Election statement.* An election under § 1.1502–91(d)(4) must be made by the common parent. The election must be made in the form of the following statement: ''THIS IS AN ELECTION UNDER § 1.1502–91(d)(4) TO TREAT THE FOLLOWING CORPORATIONS AS MEETING THE REQUIREMENTS OF § 1.1502–91 (d)(1)(ii) AND (d)(2)(ii) IMMEDIATELY AFTER THEY BECAME MEMBERS OF THE GROUP.'' [List separately the name of each corporation, its E.I.N., and the date that it became a member of the group]. If separate elections are being made for corporations that became members at different times or that were acquired from different affiliated groups, provide a separate statement and list for each election.

(3) The election statement must be filed by the common parent with its income tax return for the consolidated return year in which the members with respect to which the election is made become members of the group. Such election must be filed on or before the due date for such income tax return, including extensions.

(4) An election made under this paragraph (e) is irrevocable.

[T.D. 8824, 64 FR 36170, July 2, 1999]

§ 1.1502–97 Special rules under section 382 for members under the jurisdiction of a court in a title 11 or similar case. [Reserved]

§ 1.1502–98 Coordination with section 383.

The rules contained in §§ 1.1502–91 through 1.1502–96 also apply for purposes of section 383, with appropriate adjustments to reflect that section 383 applies to credits and net capital losses. For example, subgroups with respect to the carryover of general business credits, minimum tax credits, unused foreign tax, and net capital loss are determined by applying the principles of § 1.1502–91(d)(1). Similarly, in the case of net capital losses, general business credits, and excess foreign taxes that are pre-change attributes, § 1.383–1 applies the principles of §§ 1.1502–91 through 1.1502–96. For example, if a loss group has an ownership change under § 1.1502–92 and has a carryover of unused general business credits from a pre-change consolidated return year to a post-change consolidated return year, the amount of the group's regular tax liability for the post-change year that can be offset by the carryover cannot exceed the consolidated section 383 credit limitation for that post-change year, determined by applying the principles of §§ 1.383–1(c)(6) and 1.1502–93 (relating to the computation of the consolidated section 382 limitation).

[T.D. 8824, 64 FR 36174, July 2, 1999, as amended by T.D. 8884, 65 FR 33760, May 25, 2000]

§ 1.1502–99 Effective dates.

(a) *In general.* Except as provided in paragraphs (b) and (c) of this section, §§ 1.1502–91 through 1.1502–96 and § 1.1502–98 apply to any testing date on or after June 25, 1999. Sections 1.1502–94 through 1.1502–96 also apply to a corporation that becomes a member of a group or ceases to be a member of a group (or loss subgroup) on any date on or after June 25, 1999.

(b) *Special rules*—(1) *Election to treat subgroup parent requirement as satisfied.* Section 1.1502–91(d)(4), § 1.1502–91(d)(7), Example 4, § 1.1502–92(b)(1)(iii), § 1.1502–92(b)(2), Example 5, the last two sentences of § 1.1502–95(b)(3), § 1.1502–95(d)(2)(i), and § 1.1502–96(e)(all of which relate to the election under § 1.1502–91(d)(4) to treat the loss subgroup parent requirement as satisfied) apply to corporations that become members of a consolidated group in taxable years for which the due date of the income tax return (without extensions) is after June 25, 1999.

(2) *Principal purpose of avoiding a limitation.* The third sentence of § 1.1502–91(d)(5) (relating to members excluded from a loss subgroup) applies to corporations that become members of a consolidated group on or after June 25, 1999.

(3) *Ceasing to be a member of a loss subgroup*—(i) *Ownership change of a loss subgroup.* Section 1.1502–95(d)(2)(ii) and § 1.1502–95(d)(3), Example 3 apply to corporations that cease to bear a relationship described in section 1504(a)(1) to a loss subgroup parent in taxable years for which the due date of the income tax return (without extensions) is after June 25, 1999.

(ii) *Expiration of 5-year period.* Section 1.1502–95(d)(2)(iii) applies with respect to the day after the last day of any 5 consecutive year period described in that section that ends in a taxable year for which the due date of the income tax return (without extensions) is after June 25, 1999.

(4) *Reattribution of net operating loss carryovers under § 1.1502–20(g).* Section 1.1502–96(d) applies to reattributions of net operating loss carryovers (or capital loss carryovers) in taxable years for which the due date of the income tax return (without extensions) is after June 25, 1999; except that the election under § 1.1502–96(d)(5) (relating to an election to reattribute section 382 limitation) can be made with any election under § 1.1502–20(g)(4) to reattribute to the common parent a net operating loss or net capital loss that is timely filed on or after June 25, 1999.

(5) *Election to apportion net unrealized built-in gain.* In the case of corporations that cease to be members of a loss group (or loss subgroup) before June 25, 1999 in a taxable year for which the due date of the income tax return (without extensions) is after June 25, 1999, § 1.1502–95(a), (b), (c), and (f) apply to those corporations if the common parent makes the election described in the second sentence of paragraph (c)(1) of § 1.1502–95 in the time and manner prescribed in paragraph (f) of § 1.1502–95.

(c) *Testing period may include a period beginning before June 25, 1999*—

(1) *In general.* A testing period for purposes of §§ 1.1502–91 through 1.1502–96 and 1.1502–98 may include a period beginning before June 25, 1999. Thus, for example, in applying § 1.1502–92(b)(1)(i)(relating to the determination of an ownership change of a loss group), the determination of the lowest percentage of ownership interest of any 5-percent shareholder of the common parent during a testing period ending on a testing date occurring on or after June 25, 1999 takes into account the period beginning before June 25, 1999, except to the extent that the period is more than 3 years before the testing date or is otherwise before the beginning of the testing period. See § 1.1502–92(b)(1).

(2) *Transition rule for net unrealized built-in loss.* A loss group (or loss subgroup) that has a net unrealized built-in loss on a testing date on or after June 25, 1999 may apply § 1.1502–91A(g) (and § 1.1502–96A(a) as it relates to § 1.1502–91A(g)) for the period ending on the day before June 25, 1999 to determine under § 1.382–2T(d)(ii)(A) the earliest date that its testing period begins (treating the day before June 25, 1999 as the end of a taxable year.) Thus, for example, if a consolidated group with no net operating losses has a net unrealized built-in loss determined under § 1.1502–91(g) on a testing date after June 25, 1999, but, under § 1.1502–91A(g), does not have a net unrealized built-in loss for the period ending on the day before June 25, 1999, the group's testing period begins no earlier than June 25, 1999.

[T.D. 8824, 64 FR 36174, July 2, 1999]

§ 1.1502–100 Corporations exempt from tax.

(a) *In general*—(1) *Computation of tax liability.* The tax liability for a consolidated return year of a group of two or

more corporations described in section 1504(e) which are exempt from taxation under section 501 (hereinafter referred to in this section as ''exempt group'') shall be determined on a consolidated basis by applying the provisions of subchapter F of chapter 1 of the code in the manner provided in this section. See section 1504(e) for tax-exempt corporations eligible to file a consolidated return.

(2) *Applicability of other consolidated return provisions.* The provisions of § 1.1502–1 through § 1.1502–80 shall be applicable to an exempt group to the extent they are not inconsistent with the provisions of this section or the provisions of subchapter F of chapter 1 of the Code. For purposes of applying the provisions of § 1.1502–1 through § 1.1502–80 to an exempt group, the following substitutions shall be made:

(i) The term ''exempt group'' shall be substituted for the term ''group'',

(ii) The terms ''unrelated business taxable income'', ''separate unrelated business taxable income'', and ''consolidated unrelated business taxable income'' shall be substituted for the terms ''taxable income'', ''separate taxable income'', and ''consolidated taxable income'', and

(iii) The term ''consolidated liability for tax determined under § 1.1502–2'' (or an equivalent term) shall mean the consolidated liability for tax of an exempt group determined under paragraph (b) of this section.

(b) *Consolidated liability for tax.* The tax liability for a consolidated return year of an exempt group is the tax imposed by section 511(a) or section 1201(a) on the consolidated unrelated business taxable income for the year (determined under paragraph (c) of this section), and by allowing the credits and surtax exemption provided in § 1.1502–2.

(c) *Consolidated unrelated business taxable income.* The consolidated unrelated business taxable income for a consolidated return year shall be determined by taking into account:

(1) The separate unrelated business taxable income of each member of the exempt group (determined under paragraph (d) of this section);

(2) Any consolidated net operating loss deduction (determined under § 1.1502–21A or 1.1502–21 (as appropriate) subject to the limitations provided in section 512(b)(6);

(3) Any consolidated charitable contribution deduction (determined under § 1.1502–24) subject to the limitations provided in section 512(b)(10); and

(4) Any consolidated net gain or net loss from the disposition of debt-financed property (as defined in section 514(b)) taken into account as provided by section 514(a), or from the cutting of timber to which section 631 applies.

(d) *Separate unrelated business taxable income.* The separate unrelated business taxable income of a member of an exempt group shall be computed in accordance with the provisions of section 512 covering the determination of unrelated business taxable income of separate corporations, except that:

(1) The provisions of paragraphs (a) through (k) and (o) of § 1.1502–12 shall apply; and

(2) No charitable contributions deduction shall be taken into account under section 512(b)(10).

See sections 511(c) and 512(a)(3)(C) for special rules applicable to organizations described in section 501(c)(2).

[T.D. 7595, 44 FR 10382, Feb. 20, 1979, as amended by T.D. 8677, 61 FR 33325, June 27, 1996; T.D. 8823, 64 FR 36101, July 2, 1999]

§ 1.1503–1 Computation and payment of tax.

(a) *General rule.* In any case in which a consolidated return is filed or required to be filed, the tax shall be determined, computed, assessed, collected, and adjusted in accordance with the regulations prescribed under section 1502 promulgated prior to the last date prescribed by law for the filing of such return.

(b) *Limitation.* If the affiliated group includes one or more Western Hemisphere trade corporations (as defined in section 921) or one or more regulated public utilities (as defined in section 1503 (c)), the increase in tax described in section 1503 (a) shall be applied in a manner provided in the regulations under section 1502.

[T.D. 6500, 25 FR 12105, Nov. 26, 1960, as amended by T.D. 7244, 37 FR 28897, Dec. 30, 1972]

§ 1.1503–2 Dual consolidated loss.

(a) *Purpose and scope.* This section provides rules for the application of section 1503(d), concerning the determination and use of dual consolidated losses. Paragraph (b) of this section provides a general rule prohibiting a dual consolidated loss from offsetting the taxable income of a domestic affiliate. Paragraph (c) of this section provides definitions of the terms used in this section. Paragraph (d) of this section provides rules for calculating the amount of a dual consolidated loss and for adjusting the basis of stock of a dual resident corporation. Paragraph (e) of this section contains an anti-avoidance provision. Paragraph (f) of this section applies the rules of paragraph (d) of this section to the computation of foreign tax credit limitations. Paragraph (g) of this section provides certain exceptions to the limitation rule of paragraph (b) of this section. Finally, paragraph (h) of this section provides the effective date of the regulations and a provision for the retroactive application of the regulations to qualifying taxpayers.

(b) *In general*—(1) *Limitation on the use of a dual consolidated loss to offset income of a domestic affiliate.* Except as otherwise provided in this section, a dual consolidated loss of a dual resident corporation cannot offset the taxable income of any domestic affiliate in the taxable year in which the loss is recognized or in any other taxable year, regardless of whether the loss offsets income of another person under the income tax laws of a foreign country and regardless of whether the income that the loss may offset in the foreign country is, has been, or will be subject to tax in the United States. Pursuant to paragraph (c) (1) and (2) of this section, the same limitation shall apply to a dual consolidated loss of a separate unit of a domestic corporation as if the separate unit were a wholly owned subsidiary of such corporation.

(2) *Limitation on the use of a dual consolidated loss to offset income of a successor-in-interest.* A dual consolidated loss of a dual resident corporation also cannot be used to offset the taxable income of another corporation by means of a transaction in which the other corporation succeeds to the tax attributes of the dual resident corporation under section 381 of the Code. Similarly, a dual consolidated loss of a separate unit of a domestic corporation cannot be used to offset income of the domestic corporation following the termination, liquidation, sale, or other disposition of the separate unit. However, if a dual resident corporation transfers its assets to another corporation in a transaction subject to section 381, and the acquiring corporation is a dual resident corporation of the same foreign country of which the transferor dual resident corporation is a resident, or a domestic corporation that carries on the business activities of the transferor dual resident corporation as a separate unit, then income generated by the transferee dual resident corporation, or separate unit, may be offset by the carryover losses of the transferor dual resident corporation. In addition, if a domestic corporation transfers a separate unit to another domestic corporation in a transaction subject to section 381, the income generated by the separate unit following the transfer may be offset by the carryover losses of the separate unit.

(3) *Application of rules to multiple tiers of separate units.* If a separate unit of a domestic corporation is owned indirectly through another separate unit, the principles of paragraph (b) (1) and (2) of this section shall apply as if the upper-tier separate unit were a subsidiary of the domestic corporation and the lower-tier separate unit were a lower-tier subsidiary.

(4) *Examples.* The following examples illustrate the application of this paragraph (b).

EXAMPLE 1. P, a domestic corporation, owns all of the outstanding stock of DRC, a domestic corporation. P and DRC file a consolidated U.S. income tax return. DRC is managed and controlled in Country W, a country that determines the tax residence of corporations according to their place of management and control. Therefore, DRC is a dual resident corporation and any net operating loss it incurs is a dual consolidated loss. In Years 1 through 3, DRC incurs dual consolidated losses. Under this paragraph (b), the dual consolidated losses may not be used to offset P's income on the group's consolidated U.S. income tax return. At the end of Year 3, DRC sells all of its assets and discontinues its business operations. DRC is

then liquidated into P, pursuant to the provisions of section 332. Normally, under section 381, P would succeed to, and be permitted to utilize, DRC's net operating loss carryovers. However, this paragraph (b) prohibits the dual consolidated losses of DRC from reducing P's income for U.S. tax purposes. Therefore, DRC's net operating loss carryovers will not be available to offset P's income.

EXAMPLE 2. The facts are the same as in *Example 1*, except that DRC does not sell its assets and, following the liquidation of DRC, P continues to operate DRC's business as a separate unit (*e.g.*, a branch). DRC's loss carryovers are available to offset P's income generated by the assets previously owned by DRC and now held by the separate unit.

(c) *Definitions*. The following definitions shall apply for purposes of this section.

(1) *Domestic corporation*. The term ''domestic corporation'' has the meaning assigned to it by section 7701(a) (3) and (4). The term also includes any corporation otherwise treated as a domestic corporation by the Code, including, but not limited to, sections 269B, 953(d), and 1504 (d). For purposes of this section, any separate unit of a domestic corporation, as defined in paragraph (c) (3) and (4) of this section, shall be treated as a separate domestic corporation.

(2) *Dual resident corporation*. A dual resident corporation is a domestic corporation that is subject to the income tax of a foreign country on its worldwide income or on a residence basis. A corporation is taxed on a residence basis if it is taxed as a resident under the laws of the foreign country. An S corporation, as defined in section 1361, is not a dual resident corporation. For purposes of this section, any separate unit of a domestic corporation, as defined in paragraph (c) (3) and (4) of this section, shall be treated as a dual resident corporation. Unless otherwise indicated, any reference in this section to a dual resident corporation refers also to a separate unit.

(3) *Separate unit*—(i) The term ''separate unit'' shall mean any of the following:

(A) A foreign branch, as defined in § 1.367(a)-6T(g) (or a successor regulation), that is owned either directly by a domestic corporation or indirectly by a domestic corporation through ownership of a partnership or trust interest (regardless of whether the partnership or trust is a United States person);

(B) an interest in a partnership; or

(C) an interest in a trust.

(ii) If two or more foreign branches located in the same foreign country are owned by a single domestic corporation and the losses of each branch are made available to offset the income of the other branches under the tax laws of the foreign country, within the meaning of paragraph (c)(15)(ii) of this section, then the branches shall be treated as one separate unit.

(4) *Hybrid entity separate unit*. The term ''separate unit'' includes an interest in an entity that is not taxable as an association for U.S. income tax purposes but is subject to income tax in a foreign country as a corporation (or otherwise at the entity level) either on its worldwide income or on a residence basis.

(5) *Dual consolidated loss*—(i) *In general*. The term ''dual consolidated loss'' means the net operating loss (as defined in section 172(c) and the regulations thereunder) of a domestic corporation incurred in a year in which the corporation is dual resident corporation. The dual consolidated loss shall be computed under paragraph (d)(1) of this section. The fact that a particular item taken into account in computing a dual resident corporation's net operating loss is not taken into account in computing income subject to a foreign country's income tax shall not cause such item to be excluded from the calculation of the dual consolidated loss.

(ii) *Exceptions*. A dual consolidated loss shall not include the following—

(A) A net operating loss incurred by a dual resident corporation in a foreign country whose income tax laws—

(*1*) Do not permit the dual resident corporation to use its losses, expenses or deductions to offset the income of any other person that is recognized in the same taxable year in which the losses, expenses or deductions are incurred; and

(*2*) Do not permit the losses, expenses or deductions of the dual resident corporation to be carried over or back to be used, by any means, to offset the income of any other person in other taxable years; or

(B) A net operating loss incurred during that portion of the taxable year prior to the date on which the domestic corporation becomes a dual resident corporation or subsequent to the date on which the domestic corporation ceases to be a dual resident corporation. For purposes of determining the amount of the net operating loss incurred in that portion of the taxable year prior to the date on which the domestic corporation becomes a dual resident corporation or subsequent to the date on which the domestic corporation ceases to be a dual resident corporation, in no event shall more than the aggregate of the equal daily portion of the net operating loss commensurate with the portion of the taxable year during which the domestic corporation was not a dual resident corporation be allocated to that portion of the taxable year in which the domestic corporation was not a dual resident corporation.

(iii) *Dual consolidated losses of separate units that are partnership interests, including interests in hybrid entities.* [Reserved]

(6) *Subject to tax.* For purposes of determining whether a domestic corporation is subject to the income tax of a foreign country on its income, the fact that the corporation has no actual income tax liability to the foreign country for a particular taxable year shall not be taken into account.

(7) *Foreign country.* For purposes of this section, possessions of the United States shall be considered foreign countries.

(8) *Consolidated group.* The term ''consolidated group'' means an affiliated group, as defined in section 1504(a), with which a dual resident corporation or domestic owner files a consolidated U.S. income tax return.

(9) *Domestic owner.* The term ''domestic owner'' means a domestic corporation that owns one or more separate units.

(10) *Affiliated dual resident corporation or affiliated domestic owner.* The term ''affiliated dual resident corporation'' or ''affiliated domestic owner'' means a dual resident corporation or domestic owner that is a member of a consolidated group.

(11) *Unaffiliated dual resident corporation or unaffiliated domestic owner.* The term ''unaffiliated dual resident corporation'' or ''unaffiliated domestic owner'' means a dual resident corporation or domestic owner that is an unaffiliated domestic corporation.

(12) *Successor-in-interest.* The term ''successor-in-interest'' means an acquiring corporation that succeeds to the tax attributes of an acquired corporation by means of a transaction subject to section 381.

(13) *Domestic affiliate.* The term ''domestic affiliate'' means any member of an affiliated group, without regard to the exceptions contained in section 1504(b) (other than section 1504(b)(3)) relating to includible corporations.

(14) *Unaffiliated domestic corporation.* The term ''unaffiliated domestic corporation'' means a domestic corporation that is not a member of an affiliated group.

(15) *Use of loss to offset income of a domestic affiliate or another person*—(i) A dual consolidated loss shall be deemed to offset income of a domestic affiliate in the year it is included in the computation of the consolidated taxable income of a consolidated group. The fact that no tax benefit results from the inclusion of the dual consolidated loss in the computation of the group's consolidated taxable income in the taxable year shall not be taken into account.

(ii) Except as provided in paragraph (c)(15)(iii) of this section, a loss, expense, or deduction taken into account in computing a dual consolidated loss shall be deemed to offset income of another person under the income tax laws of a foreign country in the year it is made available for such offset. The fact that the other person does not have sufficient income in that year to benefit from such an offset shall not be taken into account. However, where the laws of a foreign country provide an election that would enable a dual resident corporation or separate unit to use its losses, expenses, or deductions to offset income of another person, the losses, expenses, or deductions shall be considered to offset such income only if the election is made.

(iii) The losses, expenses, or deductions taken into account in computing

a dual resident corporation's or separate unit's dual consolidated loss shall not be deemed to offset income of another person under the income tax laws of a foreign country for purposes of this section, if under the laws of the foreign country the losses, expenses, or deductions of the dual resident corporation or separate unit are used to offset the income of another dual resident corporation or separate unit within the same consolidated group (or income of another separate unit that is owned by the unaffiliated domestic owner of the first separate unit). If the losses, expenses, or deductions of a dual resident corporation or separate unit are made available under the laws of a foreign country to offset the income of other dual resident corporations or separate units within the same consolidated group (or other separate units owned by the unaffiliated domestic owner of the first separate unit), as well as the income of another person, and the laws of the foreign country do not provide applicable rules for determining which person's income is offset by the losses, expenses, or deductions, then for purposes of this section, the losses, expenses or deductions shall be deemed to offset the income of the other dual resident corporations or separate units, to the extent of such income, before being considered to offset the income of the other person.

(iv) Except to the extent paragraph (g)(1) of this section applies, where the income tax laws of a foreign country deny the use of losses, expenses, or deductions of a dual resident corporation to offset the income of another person because the dual resident corporation is also subject to income taxation by another country on its worldwide income or on a residence basis, the dual resident corporation shall be treated as if it actually had offset its dual consolidated loss against the income of another person in such foreign country.

(16) *Examples*. The following examples illustrate this paragraph (c).

EXAMPLE 1. X, a member of a consolidated group, conducts business through a branch in Country Y. Under Country Y's income tax laws, the branch is taxed as a permanent establishment and its losses may be used under the Country Y form of consolidation to offset the income of Z, a Country Y affiliate of X. In Year 1, the branch of X incurs an overall loss that would be treated as a net operating loss if the branch were a separate domestic corporation. Under paragraph (c)(3) of this section, the branch of X is treated as a separate domestic corporation and a dual resident corporation. Thus, under paragraph (c)(5), its loss constitutes a dual consolidated loss. Unless X qualifies for an exception under paragraph (g) of this section, paragraph (b) of this section precludes the use of the branch's loss to offset any income of X not derived from the branch operations or any income of a domestic affiliate of X.

EXAMPLE 2. A and B are members of a consolidated group. FC is a Country X corporation that is wholly owned by B. A and B organize a partnership, P, under the laws of Country X. P conducts business in Country X and its business activity constitutes a foreign branch within the meaning of paragraph (c)(3)(i)(A) of this section. P also earns U.S. source income that is unconnected with the branch operations and, therefore, is not subject to tax by Country X. Under the laws of Country X, the branch can consolidate with FC. The interests in P held by A and B are each treated as a dual resident corporation. The branch is also treated as a separate dual resident corporation. Unless an exception under paragraph (g) of this section applies, any dual consolidated loss incurred by P's branch cannot offset the U.S. source income earned by P or any other income of A or B.

EXAMPLE 3. X is classified as a partnership for U.S. income tax purposes. A, B, and C are the sole partners of X. A and B are domestic corporations and C is a Country Y corporation. For U.S. income tax purposes, each partner has an equal interest in each item of partnership profit or loss. Under Country Y's law, X is classified as a corporation and its income and losses may be used under the Country Y form of consolidation to offset the income of companies that are affiliates of X. Under paragraph (c)(3) and (4) of this section, the partnership interests held by A and B are treated as separate domestic corporations and as dual resident corporations. Unless an exception under paragraph (g) of this section applies, losses allocated to A and B can only be used to offset profits of X allocated to A and B, respectively.

EXAMPLE 4. P, a domestic corporation, files a consolidated U.S. income tax return with its two wholly-owned domestic subsidiaries, DRC1 and DRC2. Each subsidiary is also treated as a Country Y resident for Country Y tax purposes. Thus, DRC1 and DRC2 are dual resident corporations. DRC1 owns FC, a Country Y corporation. Country Y's tax laws permit affiliated resident corporations to file a form of consolidated return. In Year 1, DRC1 incurs a $200 net operating loss for both U.S. and Country Y tax purposes, while DRC2 recognizes $200 of income under the tax laws of each country. FC also earns $200 of income for Country Y tax purposes. DRC1,

DRC2, and FC file a Country Y consolidated return. However, Country Y has no applicable rules for determining which income is offset by DRC1's $200 loss. Under paragraph (c)(15)(iii) of this section, the loss shall be treated as offsetting DRC2's $200 of income. Because DRC1 and DRC2 are members of the same consolidated group, for purposes of this section, the offset of DRC1's loss against the income of DRC2 is not considered a use of the loss against the income of another person under the laws of a foreign country.

EXAMPLE 5. DRC, a domestic corporation, files a consolidated U.S. income tax return with its parent, P. DRC is also subject to tax in Country Y on its worldwide income. Therefore, DRC is a dual resident corporation and any net operating loss incurred by DRC is a dual consolidated loss. Country Y's tax laws permit corporations that are subject to tax on their worldwide income to use the Country Y form of consolidation, thus enabling eligible corporations to use their losses to offset income of affiliates. However, to prevent corporations like DRC from offsetting losses against income of affiliates in Country Y and then again offsetting the losses against income of foreign affiliates under the tax laws of another country, Country Y prevents a corporation that is also subject to the income tax of another country on its worldwide income or on a residence basis from using the Country Y form of consolidation. There is no agreement, as described in paragraph (g)(1) of this section, between the United States and Country Y. Because of Country Y's statute, DRC will be treated as having actually offset its losses against the income of affiliates in Country Y under paragraph (c)(15)(iv) of this section. Therefore, DRC will not be able to file an agreement described in paragraph (g)(2) of this section and offset its losses against the income of P or any other domestic affiliate.

(d) *Special rules for accounting for dual consolidated losses*—(1) *Determination of amount of dual consolidated loss*—(i) *Dual resident corporation that is a member of a consolidated group.* For purposes of determining whether a dual resident corporation that is a member of a consolidated group has a dual consolidated loss for the taxable year, the dual resident corporation shall compute its taxable income (or loss) in accordance with the rules set forth in the regulations under section 1502 governing the computation of consolidated taxable income, taking into account only the dual resident corporation's items of income, gain, deduction, and loss for the year. However, for purposes of this computation, the following items shall not be taken into account:

(A) Any net capital loss of the dual resident corporation; and

(B) Any carryover or carryback losses.

(ii) *Dual resident corporation that is a separate unit of a domestic corporation.* For purposes of determining whether a separate unit has a dual consolidated loss for the taxable year, the separate unit shall compute its taxable income (or loss) as if it were a separate domestic corporation and a dual resident corporation in accordance with the provisions of paragraph (d)(1)(i) of this section, using only those items of income, expense, deduction, and loss that are otherwise attributable to such separate unit.

(2) *Effect of a dual consolidated loss.* For any taxable year in which a dual resident corporation or separate unit has a dual consolidated loss to which paragraph (b) of this section applies, the following rules shall apply.

(i) If the dual resident corporation is a member of a consolidated group, the group shall compute its consolidated taxable income without taking into account the items of income, loss, or deduction taken into account in computing the dual consolidated loss. The dual consolidated loss may be carried over or back for use in other taxable years as a separate net operating loss carryover or carryback of the dual resident corporation arising in the year incurred. It shall be treated as a loss incurred by the dual resident corporation in a separate return limitation year and (without regard to whether the dual resident corporation is a common parent) shall be subject to all of the limitations of §§1.1502–21A(c) or 1.1502–21(c), as appropriate (relating to limitations on net operating loss carryovers and carrybacks from separate return limitation years).

(ii) The unaffiliated domestic owner of a separate unit, or the consolidated group of an affiliated domestic owner, shall compute its taxable income without taking into account the items of income, loss or deduction taken into account in computing the separate unit's dual consolidated loss. The dual consolidated loss shall be treated as a loss incurred by a separate corporation and its use shall be subject to all of the limitations of §§1.1502–21A(c) or 1.1502–

21(c), as appropriate, as if the separate unit were filing a consolidated return with the unaffiliated domestic owner or with the consolidated group of the affiliated domestic owner.

(3) *Basis adjustments for dual consolidated losses*—(i) *Dual resident corporation that is a member of an affiliated group.* When a dual resident corporation is a member of a consolidated group, each other member owning stock in the dual resident corporation shall adjust the basis of the stock in the following manner.

(A) *Positive adjustments.* Positive adjustments shall be made in accordance with the principles of §1.1502–32(b)(1), except that there shall be no positive adjustment under §1.1502–32(b)(1)(ii) for any amount of the dual consolidated loss that is not absorbed as a result of the application of paragraph (b) of this section. In addition, there shall be no positive adjustment for any amount included in income pursuant to paragraph (g)(2)(vii) of this section.

(B) *Negative adjustments.* Negative adjustments shall be made in accordance with the principles of §1.1502–32(b)(2), except that there shall be no negative adjustment under §1.1502–32(b)(2)(ii) for the amount of the dual consolidated loss subject to paragraph (b) of this section that is absorbed in a carryover year.

(ii) *Dual resident corporation that is a separate unit arising from an interest in a partnership.* Where a separate unit is an interest in a partnership, the domestic owner shall adjust its basis in the separate unit in accordance with section 705, except that no increase in basis shall be permitted for any amount included as income pursuant to paragraph (g)(2)(vii) of this section.

(4) *Examples.* The following examples illustrate this paragraph (d).

EXAMPLE 1. (i) P, S1, S2, and T are domestic corporations. P owns all of the stock of S1 and S2. S2 owns all of the stock of T. T is a resident of Country FC for Country FC income tax purposes. Therefore, T is a dual resident corporation. P, S1, S2, and T file a consolidated U.S. income tax return. X and Y are corporations that are not members of the consolidated group.

(ii) At the beginning of Year 1, P has a basis of $1000 in the stock of S2. S2 has a $500 basis in the stock of T.

(iii) In Year 1, T incurs interest expense in the amount of $100. In addition, T sells a noncapital asset, *u*, in which it has a basis of $10, to S1 for $50. T also sells a noncapital asset, *v*, in which it has a basis of $200, to S1 for $100. The sales of *u* and *v* are intercompany transactions described in §1.1502–13. T also sells a capital asset, *z*, in which it has a basis of $180, to Y for $90. In Year 1, S1 earns $200 of separate taxable income, calculated in accordance with §1.1502–12, as well as $90 of capital gain from a sale of an asset to X. P and S2 have no items of income, loss, or deduction for Year 1.

(iv) In Year 1, T has a dual consolidated loss of $100 (attributable to its interest expense). T's $90 capital loss is not included in the computation of the dual consolidated loss. Instead, T's capital loss is included in the computation of the consolidated group's capital gain net income under §1.1502–22(c) and is used to offset S1's $90 capital gain.

(v) No elective agreement, as described in paragraph (g)(1) of this section, exists between the United States and Country FC. For Country FC tax purposes, T's $100 loss is offset against the income of a Country FC affiliate. Therefore, T is not eligible for the exception provided in paragraph (g)(2) of this section.

(vi) Because T has a dual consolidated loss for the year, the consolidated taxable income of the consolidated group is calculated without regard to T's items of income, loss or deduction taken into account in computing the dual consolidated loss. Therefore, the consolidated taxable income of the consolidated group is $200 (the sum of $200 of separate taxable income earned by S1 plus $90 of capital gain earned by S1 minus $90 of capital loss incurred by T). The $40 gain recognized by T upon the sale of item *u* to S1 and the $100 loss recognized by T upon the sale of item *v* to S1 are deferred pursuant to §1.1502–13(c)(1).

(vii) S2 may not make the positive adjustment provided for in §1.1502–32(b)(1)(ii) to its basis in the stock of T for the $100 dual consolidated loss incurred by T. In addition, no positive adjustment in the basis of the stock is required for T's $90 capital loss because the loss has been absorbed by the consolidated group. S2, however, must make the negative adjustment provided for in §1.1502–32(b)(2)(i) for its allocable part of T's deficit in earnings and profits for the taxable year attributable to both T's $100 dual consolidated loss and T's $90 capital loss. Thus, as provided in §1.1502–32(e)(1), S2 must make a $190 net negative adjustment to its basis in the stock of T, reducing its basis to $310. As provided in §1.1502–33(c)(4)(ii)(a), S2's earnings and profits for Year 1 will reflect S2's decrease in its basis in T stock for the taxable year. Since S2 has no other earnings and profits for the taxable year, S2 has a $190 deficit in earnings and profits for the year. As

provided in § 1.1502–32(b)(2)(i), P must make a negative adjustment to its basis in the stock of S2 for its allocable part of S2's deficit in earnings and profits for the taxable year. Thus, P must make a $190 net negative adjustment to its basis in S2 stock, reducing its basis to $810.

EXAMPLE 2. (i) The facts are the same as in *Example 1*, except that in Year 2, S1 sells items *u* and *v* to X for no gain or loss. The disposition of items *u* and *v* outside of the consolidated group restores the deferred loss and gain to T. T also incurs $100 of interest expense in Year 2. In addition, T sells a noncapital asset, *r*, in which it has a basis of $100, to Y for $300. P and S2 have no items of income, loss, or deduction for Year 2.

(ii) T has $40 of separate taxable income in Year 2, computed as follows:

($100)	interest expense
($100)	sale of item *v* to S1
$ 40	sale of item *u* to S1
$200	sale of item *r* to Y
$ 40	

Thus, T has no dual consolidated loss for the year.

(iii) Since T does not have a dual consolidated loss for the taxable year, the group's consolidated taxable income is calculated in accordance with the general rule of § 1.1502–11 and not in accordance with paragraph (d)(2) of this section. T is the only member of the consolidated group that has any income or loss for the taxable year. Thus, the consolidated taxable income of the group, computed without regard to T's dual consolidated loss carryover, is $40.

(iv) As provided by § 1.1502–21A(c), the amount of the dual consolidated loss arising in Year 1 that is included in the group's consolidated net operating loss deduction for Year 2 is $40 (that is, the consolidated taxable income computed without regard to the consolidated net operating loss deduction minus such consolidated taxable income recomputed by excluding the items of income and deduction of T). Thus, the group has no consolidated taxable income for the year.

(v) S2 must make the positive adjustment provided for in § 1.502–32(b)(1)(i) to its basis in T stock for its allocable part of T's undistributed earnings and profits for the taxable year. S2 cannot make the negative adjustment provided for in § 1.1502–32(b)(2)(ii) for the dual consolidated loss of T incurred in Year 1 and absorbed in Year 2. Thus, as provided in § 1.1502–32(e)(2), S2 must make a $40 net positive adjustment to its basis in T stock, increasing its basis to $350. As provided in § 1.1502–33(c)(4)(ii)(a), S2's earnings and profits for Year 2 will reflect S2's increase in its basis in T stock for the taxable year. Since S2 has no other earnings and profits for the taxable year, S2 has $40 of earnings and profits for the year. As provided in § 1.1502–32(b)(1)(i), P must make a positive adjustment to its basis in the stock of S2 for its allocable part of the undistributed earnings and profits of S2 for the taxable year. Thus, P must make a $40 net positive adjustment to its basis in S2 stock, increasing its basis to $850.

(e) *Special rule for use of dual consolidated loss to offset tainted income*—(1) *In general*. The dual consolidated loss of any dual resident corporation that ceases to be a dual resident corporation shall not be used to offset income of such corporation to the extent that such income is tainted income, as defined in paragraph (e)(2) of this section.

(2) *Tainted income defined*. Tainted income is any income derived from tainted assets, as defined in paragraph (e)(3) of this section, beginning on the date such assets are acquired by the dual resident corporation. In the absence of evidence establishing the actual amount of income that is attributable to the tainted assets, the portion of a corporation's income in a particular taxable year that is treated as tainted income shall be an amount equal to the corporation's taxable income for the year multiplied by a fraction, the numerator of which is the fair market value of the tainted asset at the end of the taxable year and the denominator of which is the fair market value of the total assets owned by the corporation at the end of the taxable year. Documentation submitted to establish the actual amount of income that is attributable to the tainted assets must be attached to the consolidated group's or unaffiliated dual resident corporation's timely filed tax return for the taxable year in which the income is recognized.

(3) *Tainted assets defined*. Tainted assets are any asset acquired by a dual resident corporation in a non-recognition transaction, as defined in section 7701(a)(45), or any assets otherwise transferred to the corporation as a contribution to capital, at any time during the three taxable years immediately preceding the taxable year in which the corporation ceases to be a dual resident corporation or at any time thereafter. Tainted assets shall not include assets that were acquired by such dual resident corporation on or before December 31, 1986.

(4) *Exceptions.* Income derived from assets acquired by a dual resident corporation shall not be subject to the limitation described in paragraph (e)(1) of this section, if—

(i) For the taxable year in which the assets were acquired, the corporation did not have a dual consolidated loss (or a carry forward of a dual consolidated loss to such year); or

(ii) The assets were acquired as replacement property in the ordinary course of business.

(f) *Computation of foreign tax credit limitations.* If a dual resident corporation or separate unit is subject to paragraph (d)(2) of this section, the consolidated group or unaffiliated domestic owner shall compute its foreign tax credit limitation by applying the limitations of paragraph (d)(2). Thus, the dual consolidated loss is not taken into account until the year in which it is absorbed.

(g) *Exception*—(1) *Elective agreement in place between the United States and a foreign country.* Paragraph (b) of this section shall not apply to a dual consolidated loss to the extent the dual resident corporation, or domestic owner of a separate unit, elects to deduct the loss in the United States pursuant to an agreement entered into between the United States and a foreign country that puts into place an elective procedure through which losses offset income in only one country.

(2) *Elective relief provision*—(i) *In general.* Paragraph (b) of this section shall not apply to a dual consolidated loss if the consolidated group, unaffiliated dual resident corporation, or unaffiliated domestic owner elects to be bound by the provisions of this paragraph (g)(2). In order to elect relief under this paragraph (g)(2), the consolidated group, unaffiliated dual resident corporation, or unaffiliated domestic owner must attach to its timely filed U.S. income tax return for the taxable year in which the dual consolidated loss is incurred an agreement described in this paragraph (g)(2)(i). The agreement must be signed under penalties of perjury by the person who signs the return and must include the following items, in paragraphs labeled to correspond with the items set forth below:

(A) A statement that the document submitted is an election and an agreement under the provisions of § 1.1503–2(g)(2) of the Income Tax Regulations;

(B) The name, address, identifying number, and place and date of incorporation of the dual resident corporation, and the country or countries that tax the dual resident corporation on its worldwide income or on a residence basis, or, in the case of a separate unit, identification of the separate unit, including the name under which it conducts business, its principal activity, and the country in which its principal place of business is located;

(C) An agreement by the consolidated group, unaffiliated dual resident corporation, or unaffiliated domestic owner to comply with all of the provisions of paragraphs (g)(2) (iii) through (vii) of § 1.1503–2;

(D) A statement of the amount of the dual consolidated loss covered by the agreement;

(E) A certification that no portion of the dual resident corporation's or separate unit's loss, expenses, or deductions taken into account in computing the dual consolidated loss has been, or will be, used to offset the income of any other person under the income tax laws of a foreign country; and

(F) A certification that arrangements have been made to ensure that no portion of the dual consolidated loss will be used to offset the income of another person under the laws of a foreign country and that the consolidated group, unaffiliated dual resident corporation, or unaffiliated domestic owner will be informed of any such foreign use of any portion of the dual consolidated loss.

(ii) *Consistency rule*—(A) If any loss, expense, or deduction taken into account in computing the dual consolidated loss of a dual resident corporation or separate unit is used under the laws of a foreign country to offset the income of another person, then the following other dual consolidated losses (if any) shall be treated as also having been used to offset income of another person under the laws of such foreign country, but only if the income tax laws of the foreign country permit any loss, expense, or deduction taken into account in computing the other dual

consolidated loss to be used to offset the income of another person in the same taxable year;

(*1*) Any dual consolidated loss of a dual resident corporation that is a member of the same consolidated group of which the first dual resident corporation or domestic owner is a member, if any loss, expense, or deduction taken into account in computing such dual consolidated loss is recognized under the income tax laws of such country in the same taxable year; and

(*2*) Any dual consolidated loss of a separate unit that is owned by the same domestic owner that owns the first separate unit, or that is owned by any member of the same consolidated group of which the first dual resident corporation or domestic owner is a member, if any loss, expense, or deduction taken into account in computing such dual consolidated loss is recognized under the income tax laws of such country in the same taxable year.

(B) The following examples illustrate the application of this paragraph (g)(2)(ii).

EXAMPLE 1. P, a domestic corporation, owns A and B, which are domestic corporations, and C, a Country X corporation. A is subject to the income tax laws of Country X on a residence basis and, thus, is a dual resident corporation. B conducts business in Country X through a branch, which is a separate unit under paragraph (c)(3) of this section. The income tax laws of Country X permit branches of foreign corporations to elect to file consolidated returns with Country X affiliates. In Year 1, A incurs a dual consolidated loss, which is used to offset the income of C under the Country X form of consolidation. The branch of B also incurs a net operating loss. However, B elects not to use the loss on a Country X consolidated return to offset the income of foreign affiliates. The use of A's loss to offset the income of C in Country X will cause the separate unit of B to be treated as if it too had used its dual consolidated loss to offset the income of an affiliate in Country X. Therefore, an election and agreement under this paragraph (g)(2) cannot be made with respect to the separate unit's dual consolidated loss.

EXAMPLE 2. The facts are the same as in *Example 1*, except that the income tax laws of Country X do not permit branches of foreign corporations to file consolidated income tax returns with Country X affiliates. Therefore, an election and agreement described in this paragraph (g)(2) may be made for the dual consolidated loss incurred by the separate unit of B.

(iii) *Triggering events requiring the recapture of dual consolidated losses*—(A) The consolidated group, unaffiliated dual resident corporation, or unaffiliated domestic owner must agree that, if there is a triggering event described in this paragraph (g)(2)(iii), and no exception applies under paragraph (g)(2)(iv) of this section, the consolidated group, unaffiliated dual resident corporation, or unaffiliated domestic owner will recapture and report as income the amount of the dual consolidated loss provided in paragraph (g)(2)(vii) of this section on its tax return for the taxable year in which the triggering event occurs (or, when the triggering event is a use of the loss for foreign purposes, the taxable year that includes the last day of the foreign tax year during which such use occurs). In addition, the consolidated group, unaffiliated dual resident corporation, or unaffiliated domestic owner must pay any applicable interest charge required by paragraph (g)(2)(vii) of this section. For purposes of this section, any of the following events shall constitute a triggering event:

(*1*) In any taxable year up to and including the 15th taxable year following the year in which the dual consolidated loss that is the subject of the agreement filed under this paragraph (g)(2) was incurred, any portion of the losses, expenses, or deductions taken into account in computing the dual consolidated loss is used by any means to offset the income of any other person under the income tax laws of a foreign country;

(*2*) An affiliated dual resident corporation or affiliated domestic owner ceases to be a member of the consolidated group that filed the election. For purposes of this paragraph (g)(2)(iii)(A)(*2*), a dual resident corporation or domestic owner shall be considered to cease to be a member of the consolidated group if it is no longer a member of the group within the meaning of §1.1502–1(b), or if the group ceases to exist because the common parent is no longer in existence or is no longer a common parent or the group

no longer files on the basis of a consolidated return. Such disaffiliation, however, shall not constitute a triggering event if the taxpayer demonstrates, to the satisfaction of the Commissioner, that the dual resident corporation's or separate unit's losses, expenses, or deductions cannot be used to offset income of another person under the laws of a foreign country at any time after the affiliated dual resident corporation or affiliated domestic owner ceases to be a member of the consolidated group;

(*3*) An unaffiliated dual resident corporation or unaffiliated domestic owner becomes a member of a consolidated group. Such affiliation of the dual resident corporation or domestic owner, however, shall not constitute a triggering event if the taxpayer demonstrates, to the satisfaction of the Commissioner, that the losses, expenses, or deductions of the dual resident corporation or separate unit cannot be used to offset the income of another person under the laws of a foreign country at any time after the dual resident corporation or domestic owner becomes a member of the consolidated group.

(*4*) A dual resident corporation transfers assets in a transaction that results, under the laws of a foreign country, in a carryover of its losses, expenses, or deductions. For purposes of this paragraph (g)(2)(iii)(A)(*4*), a transfer, either in a single transaction or a series of transactions within a twelve-month period, of 50% or more of the dual resident corporation's assets (measured by the fair market value of the assets at the time of such transfer (or for multiple transactions, at the time of the first transfer)) shall be deemed a triggering event, unless the taxpayer demonstrates, to the satisfaction of the Commissioner, that the transfer of assets did not result in a carryover under foreign law of the dual resident corporation's losses, expenses, or deductions to the transferee of the assets;

(*5*) A domestic owner of a separate unit transfers assets of the separate unit in a transaction that results, under the laws of a foreign country, in a carryover of the separate unit's losses, expenses, or deductions. For purposes of this paragraph (g)(2)(iii)(A)(*5*), a transfer, either in a single transaction or a series of transactions over a twelve-month period, of 50% or more of the separate unit's assets (measured by the fair market value of the assets at the time of the transfer (or for multiple transfers, at the time of the first transfer)), shall be deemed a triggering event, unless the taxpayer demonstrates, to the satisfaction of the Commissioner, that the transfer of assets did not result in a carryover under foreign law of the separate unit's losses, expenses, or deductions to the transferee of the assets;

(*6*) An unaffiliated dual resident corporation or unaffiliated domestic owner becomes a foreign corporation by means of a transaction (*e.g.*, a reorganization) that, for foreign tax purposes, is not treated as involving a transfer of assets (and carryover of losses) to a new entity. Such a transaction, however, shall not constitute a triggering event if the taxpayer demonstrates, to the satisfaction of the Commissioner, that the dual resident corporation's or separate unit's losses, expenses, or deductions cannot be used to offset income of another person under the laws of the foreign country at any time after the unaffiliated dual resident corporation or unaffiliated domestic owner becomes a foreign corporation.

(*7*) A domestic owner of a separate unit, either in a single transaction or a series of transactions within a twelve-month period, sells, or otherwise disposes of, 50% or more of the interest in the separate unit (measured by voting power or value) owned by the domestic owner on the last day of the taxable year in which the dual consolidated loss was incurred. For purposes of this paragraph (g)(2)(iii)(A)(*7*), the domestic owner shall be deemed to have disposed of its entire interest in a hybrid entity separate unit if such hybrid entity becomes classified as a foreign corporation for U.S. tax purposes. The disposition of 50% or more of the interest in a separate unit, however, shall not constitute a triggering event if the taxpayer demonstrates, to the satisfaction of the Commissioner, that the losses, expenses, or deductions of the separate unit cannot be used to offset income of another person under the laws of the

foreign country at any time after the disposition of the interest in the separate unit; or

(*8*) The consolidated group, unaffiliated dual resident corporation, or unaffiliated domestic owner fails to file a certification required under paragraph (g)(2)(vi)(B) of this section.

(B) A taxpayer wishing to rebut the presumption of a triggering event described in paragraphs (g)(2)(iii)(A)(*2*) through (*7*) of this section, by demonstrating that the losses, expenses, or deductions of the dual resident corporation or separate unit cannot be carried over or otherwise used under the laws of the foreign country, must attach documents demonstrating such facts to its timely filed U.S. income tax return for the year in which the presumed triggering event occurs.

(C) The following example illustrates this paragraph (g)(2)(iii).

EXAMPLE. DRC, a domestic corporation, is a member of CG, a consolidated group. DRC is a resident Country Y for Country Y income tax purposes. Therefore, DRC is a dual resident corporation. In Year 1, DRC incurs a dual consolidated loss of $100. CG files an agreement described in paragraph (g)(2) of this section and, thus, the $100 dual consolidated loss is included in the computation of CG's consolidated taxable income. In Year 6, all of the stock of DRC is sold to P, a domestic corporation that is a member of NG, another consolidated group. The sale of DRC to P is a triggering event under paragraph (g)(2)(iii)(A) of this section, requiring the recapture of the dual consolidated loss. However, the laws of Country Y provide for a five-year carryover period for losses. At the time of DRC's disaffiliation from CG, the losses, expenses and deductions that were included in the computation of the dual consolidated loss had expired for Country Y purposes. Therefore, upon adequate documentation that the losses, expenses, or deductions have expired for Country Y purposes, CG can rebut the presumption that a triggering event has occurred.

(iv) *Exceptions*—(A) *Acquisition by a member of the consolidated group.* The following events shall not constitute triggering events, requiring the recapture of the dual consolidated loss under paragraph (g)(2)(vii) of this section:

(*1*) An affiliated dual resident corporation or affiliated domestic owner ceases to be a member of a consolidated group solely by reason of a transaction in which a member of the same consolidated group succeeds to the tax attributes of the dual resident corporation or domestic owner under the provisions of section 381;

(*2*) Assets of an affiliated dual resident corporation or assets of a separate unit of an affiliated domestic owner are acquired by a member of its consolidated group in any other transaction; or

(*3*) An affiliated domestic owner of a separate unit transfers its interest in the separate unit to another member of its consolidated group.

(B) *Acquisition by an unaffiliated domestic corporation or a new consolidated group—(1)* If the requirements of paragraph (g)(2)(iv)(B)(*2*) of this section are met, the following events shall not constitute triggering events, requiring the recapture of the dual consolidated loss under paragraph (g)(2)(vii) of this section:

(*i*) An affiliated dual resident corporation or affiliated domestic owner becomes an unaffiliated domestic corporation or a member of a new consolidated group;

(*ii*) An unaffiliated dual resident corporation or unaffiliated domestic owner becomes a member of a consolidated group;

(*iii*) Assets of a dual resident corporation or a separate unit are acquired by an unaffiliated domestic corporation or a member of a new consolidated group; or

(*iv*) A domestic owner of a separate unit transfers its interest in the separate unit to an unaffiliated domestic corporation or to a member of a new consolidated group.

(*2*) If all of the following requirements are satisfied, the events listed in paragraph (g)(2)(iv)(B)(*1*) of this section shall not constitute triggering events requiring recapture under paragraph (g)(2)(vii) of this section.

(*i*) The consolidated group, unaffiliated dual resident corporation, or unaffiliated domestic owner that filed the agreement under this paragraph (g)(2) and the unaffiliated domestic corporation or new consolidated group must enter into a closing agreement with the Internal Revenue Service providing

that the consolidated group, unaffiliated dual resident corporation, or unaffiliated domestic owner and the unaffiliated domestic corporation or new consolidated group will be jointly and severally liable for the total amount of the recapture of dual consolidated loss and interest charge required in paragraph (g)(2)(vii) of this section, if there is a triggering event described in paragraph (g)(2)(iii) of this section;

(*ii*) The unaffiliated domestic corporation or new consolidated group must agree to treat any potential recapture amount under paragraph (g)(2)(vii) of this section as unrealized built-in gain for purposes of section 384(a), subject to any applicable exceptions thereunder;

(*iii*) The unaffiliated domestic corporation or new consolidated group must file an agreement described in paragraph (g)(2)(i) of this section with its timely filed income tax return for the taxable year in which the event described in paragraph (g)(2)(iv)(B)(*1*) of this section occurs. The agreement must be signed under penalties of perjury by the person who signs the tax return of the unaffiliated domestic corporation or new consolidated group.

(C) *Subsequent triggering events.* Any triggering event described in paragraph (g)(2)(iii) of this section that occurs subsequent to one of the transactions described in paragraph (g)(2)(iv) (A) or (B) of this section and does not fall within the exceptions provided in paragraph (g)(2)(iv) (A) or (B) of this section shall require recapture under paragraph (g)(2)(vii) of this section.

(v) *Ordering rules for determining the foreign use of losses.* If the laws of a foreign country provide for the use of losses of a dual resident corporation to offset the income of another person but do not provide applicable rules for determining the order in which such losses are used to offset the income of another person in a taxable year, then for purposes of this section, the following rules shall govern:

(A) If under the laws of the foreign country the dual resident corporation has losses from different taxable years, the dual resident corporation shall be deemed to use first the losses from the earliest taxable year from which a loss may be carried forward or back for foreign law purposes.

(B) Any net loss, or income, that the dual resident corporation has in a taxable year shall first be used to offset net income, or loss, recognized by affiliates of the dual resident corporation in the same taxable year before any carryover of the dual resident corporation's losses is considered to be used to offset any income from the taxable year.

(C) Where different losses, expenses, or deductions (*e.g.*, capital losses and ordinary losses) of a dual resident corporation incurred in the same taxable year are available to offset the income of another person, the different losses shall be deemed to offset such income on a pro rata basis.

EXAMPLE. DRC, a domestic corporation, is taxed as a resident under the tax laws of Country Y. Therefore, DRC is a dual resident corporation. FA is a Country Y affiliate of DRC. Country Y's tax laws permit affiliated corporations to file a form of consolidated return. In Year 1, DRC incurs a capital loss of $80 which, for Country Y purposes, offsets completely $30 of capital gain recognized by FA. Neither corporation has any other taxable income or loss for the year. In Year 1 (and in other years), DRC recognizes the same amount of income for U.S. purposes as it does for Country Y purposes. Under paragraph (d)(1)(i) of this section, however, DRC's $80 capital loss is not a dual consolidated loss. In Year 2, DRC incurs a net operating loss of $100, while FA incurs a net operating loss of $50. DRC's $100 loss is a dual consolidated loss. Since the dual consolidated loss is not used to offset the income of another person under Country Y law, DRC is permitted to file an agreement described in this paragraph (g)(2). In Year 3, DRC has a net operating loss of $10 and FA has capital gains of $60. For Country Y purposes, DRC's $10 net operating loss is used to offset $10 of FA's $60 capital gain. DRC's $10 loss is a dual consolidated loss. Because the loss is used to offset FA's income, DRC will not be able to file an agreement under this paragraph (g)(2) with respect to the loss. Country Y permits FA's remaining $50 of Year 3 income to be offset by carryover losses. However, Country Y has no applicable rules for determining which carryover losses from Years 1 and 2 are used to offset such income. Under the ordering rules of paragraph (g)(2)(v)(A) of this section, none of DRC's $100 Year 2 loss will be deemed to offset FA's remaining $50 of Year 3 income. Instead, the $50 of capital loss carryover from Year 1 will be considered to offset the income.

(vi) *Reporting requirements*—(A) *In general*. The consolidated group, unaffiliated dual resident corporation, or unaffiliated domestic owner must answer the applicable questions regarding dual consolidated losses on its U.S. income tax return filed for the year in which the dual consolidated loss is incurred and for each of the following fifteen taxable years.

(B) *Annual certification*. Except as provided in paragraph (g)(2)(vi)(C) of this section, until and unless Form 1120 (or the Schedules thereto) contains questions pertaining to dual consolidated losses, the consolidated group, unaffiliated dual resident corporation, or unaffiliated domestic owner must file with its income tax return for each of the fifteen taxable years following the taxable year in which the dual consolidated loss is incurred a certification that the losses, expenses, or deductions that make up the dual consolidated loss have not been used to offset the income of another person under the tax laws of a foreign country. The annual certification must be signed under penalties of perjury by a person authorized to sign the agreement described in paragraph (g)(2)(i) of this section. The certification must identify the dual consolidated loss to which it pertains by setting forth the taxpayer's year in which the loss was incurred and the amount of such loss. In addition, the certification must warrant that arrangements have been made to ensure that the loss will not be used to offset the income of another person under the laws of a foreign country and that the taxpayer will be informed of any such foreign use of any portion of the loss. If dual consolidated losses of more than one taxable year are subject to the rules of this paragraph (g)(2)(vi)(B), the certifications for those years may be combined in a single document but each dual consolidated loss must be separately identified.

(C) *Exception*. A consolidated group or unaffiliated domestic owner is not required to file annual certifications under paragraph (g)(2)(vi)(B) of this section with respect to a dual consolidated loss of any separate unit other than a hybrid entity separate unit.

(vii) *Recapture of loss and interest charge*—(A) *Presumptive rule—(1) Amount of recapture*. Except as otherwise provided in this paragraph (g)(2)(vii), upon the occurrence of a triggering event described in paragraph (g)(2)(iii) of this section, the taxpayer shall recapture and report as gross income the total amount of the dual consolidated loss to which the triggering event applies on its income tax return for the taxable year in which the triggering event occurs (or, when the triggering event is a use of the loss for foreign tax purposes, the taxable year that includes the last day of the foreign tax year during which such use occurs).

(*2*) *Interest charge*. In connection with the recapture, the taxpayer shall pay an interest charge. Except as otherwise provided in this paragraph (g)(2)(vii), such interest shall be determined under the rules of section 6601(a) as if the additional tax owed as a result of the recapture had accrued and been due and owing for the taxable year in which the losses, expenses, or deductions taken into account in computing the dual consolidated loss gave rise to a tax benefit for U.S. income tax purposes. For purposes of this paragraph (g)(2)(vii)(A)(*2*), a tax benefit shall be considered to have arisen in a taxable year in which such losses, expenses or deductions reduced U.S. taxable income.

(B) *Rebuttal of presumptive rule—(1) Amount of recapture*. The amount of dual consolidated loss that must be recaptured under this paragraph (g)(2)(vii) may be reduced if the taxpayer demonstrates, to the satisfaction of the Commissioner, the offset permitted by this paragraph (g)(2)(vii)(B). The reduction in the amount of recapture is the amount by which the dual consolidated loss would have offset other taxable income reported on a timely filed U.S. income tax return for any taxable year up to and including the year of the triggering event if such loss had been subject to the restrictions of paragraph (b) of this section (and therefore had been subject to the separate return limitation year restrictions of §§1.1502–21A(c) or 1.1502–21(c) (as appropriate) commencing in the

taxable year in which the loss was incurred. A taxpayer utilizing this rebuttal rule must attach to its timely filed U.S. income tax return a separate accounting showing that the income for each year that offsets the dual resident corporation's or separate unit's recapture amount is attributable only to the dual resident corporation or separate unit.

(*2*) *Interest charge*. The interest charge imposed under this paragraph (g)(2)(vii) may be appropriately reduced if the taxpayer demonstrates, to the satisfaction of the Commissioner, that the net interest owed would have been less than that provided in paragraph (g)(2)(vii)(A)(*2*) of this section if the taxpayer had filed an amended return for the year in which the loss was incurred, and for any other affected years up to and including the year of recapture, treating the dual consolidated loss as a loss subject to the restrictions of paragraph (b) of this section (and therefore subject to the separate return limitation year restrictions of §§1.1502–21A(c) or 1.1502–21(c) (as appropriate). A taxpayer utilizing this rebuttal rule must attach to its timely filed U.S. income tax return a computation demonstrating the reduction in the net interest owed as a result of treating the dual consolidated loss as a loss subject to the restrictions of paragraph (b) of this section.

(C) *Computation of taxable income in year of recapture—(1) Presumptive rule*. Except as otherwise provided in paragraph (g)(2)(vii)(C)(*2*) of this section, for purposes of computing the taxable income for the year of recapture, no current, carryover or carryback losses of the dual resident corporation or separate unit, of other members of the consolidated group, or of the domestic owner that are not attributable to the separate unit, may offset and absorb the recapture amount.

(*2*) *Rebuttal of presumptive rule*. The recapture amount included in gross income may be offset and absorbed by that portion of the taxpayer's (consolidated or separate) net operating loss carryover that is attributable to the dual consolidated loss being recaptured, if the taxpayer demonstrates, to the satisfaction of the Commissioner, the amount of such portion of the carryover. A taxpayer utilizing this rebuttal rule must attach to its timely filed U.S. income tax return a computation demonstrating the amount of net operating loss carryover that, under this paragraph (g)(2)(vii)(C)(*2*), may absorb the recapture amount included in gross income.

(D) *Character and source of recapture income*. The amount recaptured under this paragraph (g)(2)(vii) shall be treated as ordinary income in the year of recapture. The amount recaptured shall be treated as income having the same source and falling within the same separate category for purposes of section 904 as the dual consolidated loss being recaptured.

(E) *Reconstituted net operating loss*. Commencing in the taxable year immediately following the year in which the dual consolidated loss is recaptured, the dual resident corporation or separate unit shall be treated as having a net operating loss in an amount equal to the amount actually recaptured under paragraph (g)(2)(vii) (A) or (B) of this section. This reconstituted net operating loss shall be subject to the restrictions of paragraph (b) of this section (and therefore, the separate return limitation year restrictions of §§1.1502–21A(c) or 1.1502–21T(c) (as appropriate). The net operating loss shall be available only for carryover, under section 172(b), to taxable years following the taxable year of recapture. For purposes of determining the remaining carryover period, the loss shall be treated as if it had been recognized in the taxable year in which the dual consolidated loss that is the basis of the recapture amount was incurred.

(F) *Consequences of failing to comply with recapture provisions—(1) In general*. If the taxpayer fails to comply with the recapture provisions of this paragraph (g)(2)(vii) upon the occurrence of a triggering event, then the dual resident corporation or separate unit that incurred the dual consolidated loss (or a successor-in-interest) shall not be eligible for the relief provided in paragraph (g)(2) of this section with respect to any dual consolidated losses incurred in the five taxable years beginning with the taxable year in which recapture is required.

(*2*) *Exceptions*. In the case of a triggering event other than a use of the losses, expenses, or deductions taken into account in computing the dual consolidated loss to offset income of another person under the income tax laws of a foreign country, this rule shall not apply in the following circumstances:

(*i*) The failure to recapture is due to reasonable cause; or

(*ii*) A taxpayer seeking to rebut the presumption of a triggering event satisfies the filing requirements of paragraph (g)(2)(iii)(B) of this section.

(G) *Examples*. The following examples illustrate this paragraph (g)(2)(vii).

EXAMPLE 1. P, a domestic corporation, files a consolidated return with DRC, a dual resident corporation. In Year 1, DRC incurs a dual consolidated loss of $100 and P earns $100. P files an agreement under this paragraph (g)(2). Therefore, the consolidated group is permitted to offset P's $100 of income with DRC's $100 loss. In Year 2, DRC earns $30, which is completely offset by a $30 net operating loss incurred by P. In Year 3, DRC earns income of $25 while P recognizes no income or loss. In addition, there is a triggering event in Year 3. Therefore, under the presumptive rule of paragraph (g)(2)(vii)(A) of this section, DRC must recapture $100. However, the $100 recapture amount may be reduced by $25 (the amount by which the dual consolidated loss would have offset other taxable income if it had been subject to the separate return limitation year restrictions from Year 1) upon adequate documentation of such offset under paragraph (g)(2)(vii)(B)(*1*) of this section. Commencing in Year 4, the $100 (or $75) recapture amount is treated as a loss incurred by DRC in a separate return limitation year, subject to the restrictions of §§1.1502–21A(c) or 1.1502–21(c), as appropriate. The carryover period of the loss, for purposes of section 172(b), will start from Year 1, when the dual consolidated loss was incurred.

EXAMPLE 2. The facts are the same as in EXAMPLE 1, except that in Year 2, DRC earns $75 and P earns $50. In Year 3, DRC earns $25 while P earns $30. A triggering event occurs in Year 3. The $100 presumptive amount of recapture can be reduced to zero by the $75 and $25 earned by DRC in Years 2 and 3, respectively, upon adequate documentation of such offset under paragraph (g)(2)(vii)(B)(*1*) of this section. Nevertheless, an interest charge will be owed. Under the presumptive rule of paragraph (g)(2)(vii)(A)(*2*) of this section, interest will be charged on the additional tax owed on the $100 of recapture income as if the tax had accrued in Year 1 (the year in which the dual consolidated loss reduced the income of P). However, the net interest will be reduced to the amount that would have been owed if the consolidated group had filed amended returns, treating the dual consolidated loss as a loss subject to the separate return limitation year restrictions of §1.1502–21A(c) or 1.1502–21(c), as appropriate, upon adequate documentation of such reduction of interest under paragraph (g)(2)(vii)(B)(*2*) of this section.

EXAMPLE 3. P, a domestic corporation, owns DRC, a domestic corporation that is subject to the income tax laws of Country Z on a residence basis. DRC owns FE, a Country Z corporation. In Year 1, DRC incurs a net operating loss for U.S. tax purposes. Under the tax laws of Country Z, the loss is not recognized until Year 3. The Year 1 net operating loss is a dual consolidated loss under paragraph (c)(5) of this section. The consolidated group elects relief under paragraph (g)(2) of this section by filing the appropriate agreement and uses the dual consolidated loss on its U.S. income tax return. In Year 3, the dual consolidated loss is used under the laws of Country Z to offset the income of FE, which is a triggering event under paragraph (g)(2)(iii) of this section. However, the consolidated group does not recapture the dual consolidated loss. The consolidated group's failure to comply with the recapture provisions of this paragraph (g)(2)(vii) prevents DRC from being eligible for the relief provided under paragraph (g)(2) of this section for any dual consolidated losses incurred in Years 3 through 7, inclusive.

(h) *Effective date*—(1) *In general*. These regulations are effective for taxable years beginning on or after October 1, 1992. Section 1.1503–2A is effective for taxable years beginning after December 31, 1986, and before October 1, 1992.

(2) *Taxpayers that have filed for relief under §1.1503–2A*—(i) *In general*. Except as provided in paragraph (h)(ii)(b) of this section, taxpayers that have filed agreements described in §1.1503–2A(c)(3) or certifications described in §1.1503–2A(d)(3) shall continue to be subject to the provisions of such agreements or certifications, including the amended return or recapture requirements applicable in the event of a triggering event, for the remaining term of such agreements or certifications.

(ii) *Special transition rule*. A taxpayer that has filed an agreement described in §1.1503–2A(c)(3) or a certification described in §1.1503–2A(d)(3) and that is in compliance with the provisions of §1.1503–2A may elect to replace such agreement or certification with an

agreement described in paragraph (g)(2)(i) of this section. However, a taxpayer making this election must replace all agreements and certifications filed under §1.1503–2A. If the taxpayer is a consolidated group, the election must be made with respect to all dual resident corporations or separate units within the group. Likewise, if the taxpayer is an unaffiliated domestic owner, the election must be made with respect to all separate units of the domestic owner. The taxpayer must file the replacement agreement with its timely filed income tax return for its first taxable year commencing on or after October 1, 1992, stating that such agreement is a replacement for the agreement filed under §1.1503–2A(c)(3) or the certification filed under §1.1503–2A(d)(3) and identifying the taxable year for which the original agreement or certification was filed. A single agreement described in paragraph (g)(2)(i) of this section may be filed to replace more than one agreement or certification filed under §1.1503–2A; however, each dual consolidated loss must be separately identified. A taxpayer may also elect to apply §1.1503–2 for all open years, with respect to agreements filed under §1.1503–2A(c)(3) or certifications filed under §1.1503–2A(d)(3), in cases where the agreement or certification is no longer in effect and the taxpayer has complied with the provisions of §1.1503–2A. For example, a taxpayer may have had a triggering event under §1.1503–2A that is not a triggering event under §1.1503–2. If the taxpayer fully complied with the requirements of the agreement entered into under §1.1503–2A(c)(3) and filed amended U.S. income tax returns within the time required under §1.1503–2A(c)(3), the taxpayer may file amended U.S. income tax returns consistent with the position that the earlier triggering event is no longer a triggering event.

(3) *Taxpayers that are in compliance with §1.1503–2A but have not filed for relief thereunder*. A taxpayer that is in compliance with the provisions of §1.1503–2A but has not filed an agreement described in §1.1503–2A(c)(3) or a certification described in §1.1503–2A(d)(3) may elect to have the provisions of §1.1503–2 apply for any open year. In particular, a taxpayer may elect to apply the provisions of §1.1503–2 in a case where the dual consolidated loss has been subjected to the separate return limitation year restrictions of §1.1502–21A(c) or 1.1502–21(c) (as appropriate) but the losses, expenses, or deductions taken into account in computing the dual consolidated loss have not been used to offset the income of another person for foreign tax purposes. However, if a taxpayer is a consolidated group, the election must be made with respect to all dual resident corporations or separate units within the group. Likewise, if the taxpayer is an unaffiliated domestic owner, the election must be made with respect to all separate units of the domestic owner.

[T.D. 8434, 57 FR 41084, Sept. 9, 1992; 57 FR 48722, Oct. 28, 1992; 57 FR 57280, Dec. 3, 1992; 58 FR 13413, Mar. 11, 1993, as amended by T.D. 8597, 60 FR 36680, July 18, 1995; T.D. 8677, 61 FR 33325, June 27, 1996; T.D. 8823, 64 FR 36101, July 2, 1999]

§ 1.1504–0 Outline of provisions.

In order to facilitate the use of §§1.1504–1 through 1.1504–4, this section lists the captions contained in §§1.1504–1 through 1.1504–4.

§ 1.1504–1 Definitions.

§ 1.1504–2 [Reserved]

§ 1.1504–3 [Reserved]

§ 1.1504–4 Treatment of warrants, options, convertible obligations, and other similar interests.

(a) Introduction.
(1) General rule.
(2) Exceptions.
(b) Options not treated as stock or as exercised.
(1) General rule.
(2) Options treated as exercised.
(i) In general.
(ii) Aggregation of options.
(iii) Effect of treating option as exercised.
(A) In general.
(B) Cash settlement options, phantom stock, stock appreciation rights, or similar interests.
(iv) Valuation.
(3) Example.
(c) Definitions.
(1) Issuing corporation.
(2) Related or sequential option.
(3) Related persons.
(4) Measurement date.
(i) General rule.
(ii) Issuances, transfers, or adjustments not treated as measurement dates.

(iii) Transactions increasing likelihood of exercise.
(iv) Measurement date for options issued pursuant to a plan.
(v) Measurement date for related or sequential options.
(vi) Example.
(5) In-the-money.
(d) Options.
(1) Instruments treated as options.
(2) Instruments generally not treated as options.
(i) Options on section 1504(a)(4) stock.
(ii) Certain publicly traded options.
(A) General rule.
(B) Exception.
(iii) Stock purchase agreements.
(iv) Escrow, pledge, or other security agreements.
(v) Compensatory options.
(A) General rule.
(B) Exceptions.
(vi) Options granted in connection with a loan.
(vii) Options created pursuant to a title 11 or similar case.
(viii) Convertible preferred stock.
(ix) Other enumerated instruments.
(e) Elimination of federal income tax liability.
(f) Substantial amount of federal income tax liability.
(g) Reasonable certainty of exercise.
(1) Generally.
(i) Purchase price.
(ii) In-the-money option.
(iii) Not in-the-money option.
(iv) Exercise price.
(v) Time of exercise.
(vi) Related or sequential options.
(vii) Stockholder rights.
(viii) Restrictive covenants.
(ix) Intention to alter value.
(x) Contingencies.
(2) Cash settlement options, phantom stock, stock appreciation rights, or similar interests.
(3) Safe harbors.
(i) Options to acquire stock.
(ii) Options to sell stock.
(iii) Options exercisable at fair market value.
(iv) Exceptions.
(v) Failure to satisfy safe harbor.
(h) Examples.
(i) Effective date.

[T.D. 8462, 57 FR 61800, Dec. 29, 1992]

§ 1.1504–1 Definitions.

The privilege of filing consolidated returns is extended to all includible corporations constituting affiliated groups as defined in section 1504. See the regulations under § 1.1502 for a description of an affiliated group and the corporations which may be considered as includible corporations.

[T.D. 6500, 25 FR 12106, Nov. 26, 1960]

§§ 1.1504–2—1.1504–3 [Reserved]

§ 1.1504–4 Treatment of warrants, options, convertible obligations, and other similar interests.

(a) *Introduction*—(1) *General rule*. This section provides regulations under section 1504(a)(5) (A) and (B) regarding the circumstances in which warrants, options, obligations convertible into stock, and other similar interests are treated as exercised for purposes of determining whether a corporation is a member of an affiliated group. The fact that an instrument may be treated as an option under these regulations does not prevent such instrument from being treated as stock under general principles of law. Except as provided in paragraph (a)(2) of this section, this section applies to all provisions under the Internal Revenue Code and the regulations to which affiliation within the meaning of section 1504(a) (with or without the exceptions in section 1504(b)) is relevant, including those provisions that refer to section 1504(a)(2) (with or without the exceptions in section 1504(b)) without referring to affiliation, provided that the 80 percent voting power and 80 percent value requirements of section 1504(a)(2) are not modified therein.

(2) *Exceptions*. This section does not apply to sections 163(j), 864(e), or 904(i) or to the regulations thereunder. This section also does not apply to any other provision specified by the Internal Revenue Service in regulations, a revenue ruling, or revenue procedure. See § 601.601(d)(2)(ii)(*b*) of this chapter.

(b) *Options not treated as stock or as excerised*—(1) *General rule*. Except as provided in paragraph (b)(2) of this section, an option is not considered either as stock or as exercised. Thus, options are disregarded in determining whether a corporation is a member of an affiliated group unless they are described in paragraph (b)(2) of this section.

(2) *Options treated as exercised*—(i) *In general*. Solely for purposes of determining whether a corporation is a member of an affiliated group, an option is treated as exercised if, on a

measurement date with respect to such option—

(A) It could reasonably be anticipated that, if not for this section, the issuance or transfer of the option in lieu of the issuance, redemption, or transfer of the underlying stock would result in the elimination of a substantial amount of federal income tax liability (as described in paragraphs (e) and (f) of this section); and

(B) It is reasonably certain that the option will be exercised (as described in paragraph (g) of this section).

(ii) *Aggregation of options.* All options with the same measurement date are aggregated in determining whether the issuance or transfer of an option in lieu of the issuance, redemption, or transfer of the underlying stock would result in the elimination of a substantial amount of federal income tax liability.

(iii) *Effect of treating option as exercised*—(A) *In general.* An option that is treated as exercised is treated as exercised for purposes of determining the percentage of the value of stock owned by the holder and other parties, but is not treated as exercised for purposes of determining the percentage of the voting power of stock owned by the holder and other parties.

(B) *Cash settlement options, phantom stock, stock appreciation rights, or similar interests.* If a cash settlement option, phantom stock, stock appreciation right, or similar interest is treated as exercised, the option is treated as having been converted into stock of the issuing corporation. If the amount to be received upon the exercise of such an option is determined by reference to a multiple of the increase in the value of a share of the issuing corporation's stock on the exercise date over the value of a share of the stock on the date the option is issued, the option is treated as converted into a corresponding number of shares of such stock. Appropriate adjustments must be made in any situation in which the amount to be received upon exercise of the option is determined in another manner.

(iv) *Valuation.* For purposes of section 1504(a)(2)(B) and this section, all shares of stock within a single class are considered to have the same value. Thus, control premiums and minority and blockage discounts within a single class are not taken into account.

(3) *Example.* The provisions of paragraph (b)(2) of this section may be illustrated by the following example:

Example. (i) Corporation P owns all 100 shares of the common stock of Corporation S, the only class of S stock outstanding. Each share of S stock has a fair market value of $10 and has one vote. On June 30, 1992, P issues to Corporation X an option to acquire 80 shares of the S stock from P.

(ii) If, under the provisions of this section, the option is treated as exercised, then, solely for purposes of determining affiliation, P is treated as owning only 20 percent of the value of the outstanding S stock and X is treated as owing the remaining 80 percent of the value of the S stock. P is still treated as owning all of the voting power of S. Accordingly, because P is treated as owning less than 80 percent of the value of the outstanding S stock, P and S are no longer affiliated. However, because X is not treated as owning any of the voting power of S, X and S are also not affiliated.

(c) *Definitions.* For purposes of this section—

(1) *Issuing corporation.* ''Issuing corporation'' means the corporation whose stock is subject to an option.

(2) *Related or sequential option.* ''Related or sequential option'' means an option that is one of a series of options issued to the same or related persons. For purposes of this section, any options issued to the same person or related persons within a two-year period are presumed to be part of a series of options. This presumption may be rebutted if the facts and circumstances clearly establish that the options are not part of a series of options. Any options issued to the same person or related persons more than two years apart are presumed not to be part of a series of options. This presumption may be rebutted if the facts and circumstances clearly establish that the options are part of a series of options.

(3) *Related persons.* Persons are related if they are related within the meaning of section 267(b) (without the application of sections 267(c) and 1563(e)(1)) or 707(b)(1), substituting ''10 percent'' for ''50 percent'' wherever it appears.

(4) *Measurement date*—(i) *General rule.* ''Measurement date'' means a date on which an option is issued or transferred or on which the terms of an existing

option or the underlying stock are adjusted (including an adjustment pursuant to the terms of the option or the underlying stock).

(ii) *Issuances, transfers, or adjustments not treated as measurement dates.* A measurement date does not include a date on which—

(A) An option is issued or transferred by gift, at death, or between spouses or former spouses under section 1041;

(B) An option is issued or transferred—

(*1*) Between members of an affiliated group (determined with the exceptions in section 1504(b) and without the application of this section); or

(*2*) Between persons none of which is a member of the affiliated group (determined without the exceptions in section 1504(b) and without the application of this section), if any, of which the issuing corporation is a member, unless—

(*i*) Any such person is related to (or acting in concert with) the issuing corporation or any member of its affiliated group; and

(*ii*) The issuance or transfer is pursuant to a plan a principal purpose of which is to avoid the application of section 1504 and this section;

(C) An adjustment occurs in the terms or pursuant to the terms of an option or the underlying stock that does not materially increase the likelihood that the option will be exercised; or

(D) A change occurs in the exercise price of an option or in the number of shares that may be issued or transferred pursuant to the option as determined by a bona fide, reasonable, adjustment formula that has the effect of preventing dilution of the interests of the holders of the options.

(iii) *Transactions increasing likelihood of exercise.* If a change or alteration referred to in this paragraph (c)(4)(iii) is made for a principal purpose of increasing the likelihood that an option will be exercised, a measurement date also includes any date on which—

(A) The capital structure of the issuing corporation is changed; or

(B) The fair market value of the stock of the issuing corporation is altered through a transfer of assets to or from the issuing corporation (other than regular, ordinary dividends) or by any other means.

(iv) *Measurement date for options issued pursuant to a plan.* In the case of options issued pursuant to a plan, a measurement date for any of the options constitutes a measurement date for all options issued pursuant to the plan that are outstanding on the measurement date.

(v) *Measurement date for related or sequential options.* In the case of related or sequential options, a measurement date for any of the options constitutes a measurement date for all related or sequential options that are outstanding on the measurement date.

(vi) *Example.* The provisions of paragraph (c)(4)(v) of this section may be illustrated by the following example.

Example. (i) Corporation P owns all 80 shares of the common stock of Corporation S, the only class of S stock outstanding. On January 1, 1992, S issues a warrant, exercisable within 3 years, to U, an unrelated corporation, to acquire 10 newly issued shares of S common stock. On July 1, 1992, S issues a second warrant to U to acquire 10 additional newly issued shares of S common stock. On January 1, 1993, S issues a third warrant to T, a wholly owned subsidiary of U, to acquire 10 newly issued shares of S common stock. Assume that the facts and circumstances do not clearly establish that the options are not part of a series of options.

(ii) January 1, 1992, July 1, 1992, and January 1, 1993, constitute measurement dates for the first warrant, the second warrant, and the third warrant, respectively, because the warrants were issued on those dates.

(iii) Because the first and second warrants were issued within two years of each other, and both warrants were issued to U, the warrants constitute related or sequential options. Accordingly, July 1, 1992, constitutes a measurement date for the first warrant as well as for the second warrant.

(iv) Because the first, second, and third warrants were all issued within two years of each other, and were all issued to the same or related persons, the warrants constitute related or sequential options. Accordingly, January 1, 1993, constitutes a measurement date for the first and second warrants, as well as for the third warrant.

(5) *In-the-money.* ''In-the-money'' means the exercise price of the option is less than (or in the case of an option to sell stock, greater than) the fair market value of the underlying stock.

(d) *Options*—(1) *Instruments treated as options*. For purposes of this section, except to the extent otherwise provided in this paragraph (d), the following are treated as options:

(i) A call option, warrant, convertible obligation, put option, redemption agreement (including a right to cause the redemption of stock), or any other instrument that provides for the right to issue, redeem, or transfer stock (including an option on an option); and

(ii) A cash settlement option, phantom stock, stock appreciation right, or any other similar interest (except for stock).

(2) *Instruments generally not treated as options*. For purposes of this section, the following will not be treated as options:

(i) *Options on section 1504(a)(4) stock*. Options on stock described in section 1504(a)(4);

(ii) *Certain publicly traded options*—(A) *General rule*. Options which on the measurement date are traded on (or subject to the rules of) a qualified board or exchange as defined in section 1256(g)(7), or on any other exchange, board of trade, or market specified by the Internal Revenue Service in regulations, a revenue ruling, or revenue procedure. See §601.601(d)(2)(ii)(*b*) of this chapter;

(B) *Exception*. Paragraph (d)(2)(ii)(A) of this section does not apply to options issued, transferred, or listed with a principal purpose of avoiding the application of section 1504 and this section. For example, a principal purpose of avoiding the application of section 1504 and this section may exist if warrants, convertible or exchangeable debt instruments, or other similar instruments have an exercise price (or, in the case of convertible or exchangeable instruments, a conversion or exchange premium) that is materially less than, or a term that is materially longer than, those that are customary for publicly traded instruments of their type. A principal purpose may also exist if a large percentage of an issuance of an instrument is placed with one investor (or group of investors) and a very small percentage of the issuance is traded on a qualified board or exchange;

(iii) *Stock purchase agreements*. Stock purchase agreements or similar arrangements whose terms are commercially reasonable and in which the parties' obligations to complete the transaction are subject only to reasonable closing conditions;

(iv) *Escrow, pledge, or other security agreements*. Agreements for holding stock in escrow or under a pledge or other security agreement that are part of a typical commercial transaction and that are subject to customary commercial conditions;

(v) *Compensatory options*—(A) *General rule*. Stock appreciation rights, warrants, stock options, phantom stock, or other similar instruments provided to employees, directors, or independent contractors in connection with the performance of services for the corporation or a related corporation (and that is not excessive by reference to the services performed) and which—

(*1*) Are nontransferable within the meaning of §1.83–3(d); and

(*2*) Do not have a readily ascertainable fair market value as defined in §1.83–7(b) on the measurement date;

(B) *Exceptions*. (*1*) Paragraph (d)(2)(v)(A) of this section does not apply to options issued or transferred with a principal purpose of avoiding the application of section 1504 and this section; and

(*2*) Paragraph (d)(2)(v)(A) of this section ceases to apply to options that become transferable;

(vi) *Options granted in connection with a loan*. Options granted in connection with a loan if the lender is actively and regularly engaged in the business of lending and the options are issued in connection with a loan to the issuing corporation that is commercially reasonable. This paragraph (d)(2)(vi) continues to apply if the option is transferred with the loan (or if a portion of the option is transferred with a corresponding portion of the loan). However, if the option is transferred without a corresponding portion of the loan, this paragraph (d)(2)(vi) ceases to apply;

(vii) *Options created pursuant to a title 11 or similar case*. Options created by the solicitation or receipt of acceptances to a plan of reorganization in a title 11 or similar case (within the meaning of section 368(a)(3)(A)), the option created by the confirmation of the

plan, and any option created under the plan prior to the time the plan becomes effective;

(viii) *Convertible preferred stock*. Convertible preferred stock, provided the terms of the conversion feature do not permit or require the tender of any consideration other than the stock being converted; and

(ix) *Other enumerated instruments*. Any other instruments specified by the Internal Revenue Service in regulations, a revenue ruling, or revenue procedure. See §601.601(d)(2)(ii)(*b*) of this chapter.

(e) *Elimination of federal income tax liability*. For purposes of this section, the elimination of federal income tax liability includes the elimination or deferral of federal income tax liability. In determining whether there is an elimination of federal income tax liability, the tax consequences to all involved parties are considered. Examples of elimination of federal income tax liability include the use of a loss or deduction that would not otherwise be utilized, the acceleration of a loss or deduction to a year earlier than the year in which the loss or deduction would otherwise be utilized, the deferral of gain or income to a year later than the year in which the gain or income would otherwise be reported, and the acceleration of gain or income to a year earlier than the year in which the gain or income would otherwise be reported, if such gain or income is offset by a net operating loss or net capital loss that would otherwise expire unused. The elimination of federal income tax liability does not include the deferral of gain with respect to the stock subject to the option that would be recognized if such stock were sold on a measurement date.

(f) *Substantial amount of federal income tax liability*. The determination of what constitutes a substantial amount of federal income tax liability is based on all the facts and circumstances, including the absolute amount of the elimination, the amount of the elimination relative to overall tax liability, and the timing of items of income and deductions, taking into account present value concepts.

(g) *Reasonable certainty of exercise*—(1) *Generally*. The determination of whether, as of a measurement date, an option is reasonably certain to be exercised is based on all the facts and circumstances, including:

(i) *Purchase price*. The purchase price of the option in absolute terms and in relation to the fair market value of the stock or the exercise price of the option;

(ii) *In-the-money option*. Whether and to what extent the option is in-the-money on the measurement date;

(iii) *Not in-the-money option*. If the option is not in-the-money on the measurement date, the amount or percentage by which the exercise price of the option is greater than (or in the case of an option to sell stock, is less than) the fair market value of the underlying stock;

(iv) *Exercise price*. Whether the exercise price of the option is fixed or fluctuates depending on the earnings, value, or other indication of economic performance of the issuing corporation;

(v) *Time of exercise*. The time at which, or the period of time during which, the option can be exercised;

(vi) *Related or sequential options*. Whether the option is one in a series of related or sequential options;

(vii) *Stockholder rights*. The existence of an arrangement (either within the option agreement or in a related agreement) that, directly or indirectly, affords managerial or economic rights in the issuing corporation that ordinarily would be afforded to owners of the issuing corporation's stock (e.g., voting rights, dividend rights, or rights to proceeds on liquidation) to the person who would acquire the stock upon exercise of the option or a person related to such person. For this purpose, managerial or economic rights in the issuing corporation possessed because of actual stock ownership in the issuing corporation are not taken into account;

(viii) *Restrictive covenants*. The existence of restrictive covenants or similar arrangements (either within the option agreement or in a related agreement) that, directly or indirectly, prevent or limit the ability of the issuing corporation to undertake certain activities while the option is outstanding (e.g., covenants limiting the payment of dividends or borrowing of funds);

(ix) *Intention to alter value.* Whether it was intended that through a change in the capital structure of the issuing corporation or a transfer of assets to or from the issuing corporation (other than regular, ordinary dividends) or by any other means, the fair market value of the stock of the issuing corporation would be altered for a principal purpose of increasing the likelihood that the option would be exercised; and

(x) *Contingencies.* Any contingency (other than the mere passage of time) to which the exercise of the option is subject (e.g., a public offering of the issuing corporation's stock or reaching a certain level of earnings).

(2) *Cash settlement options, phantom stock, stock appreciation rights, or similar interests.* A cash settlement option, phantom stock, stock appreciation right, or similar interest is treated as reasonably certain to be exercised if it is reasonably certain that the option will have value at some time during the period in which the option may be exercised.

(3) *Safe harbors*—(i) *Options to acquire stock.* Except as provided in paragraph (g)(3)(iv) of this section, an option to acquire stock is not considered reasonably certain, as of a measurement date, to be exercised if—

(A) The option may be exercised no more than 24 months after the measurement date and the exercise price is equal to or greater than 90 percent of the fair market value of the underlying stock on the measurement date; or

(B) The terms of the option provide that the exercise price of the option is equal to or greater than the fair market value of the underlying stock on the exercise date.

(ii) *Options to sell stock.* Except as provided in paragraph (g)(3)(iv) of this section, an option to sell stock is not considered reasonably certain, as of a measurement date, to be exercised if—

(A) The option may be exercised no more than 24 months after the measurement date and the exercise price is equal to or less than 110 percent of the fair market value of the underlying stock on the measurement date; or

(B) The terms of the option provide that the exercise price of the option is equal to or less than the fair market value of the underlying stock on the exercise date.

(iii) *Options exercisable at fair market value.* For purposes of paragraphs (g)(3)(i)(B) and (g)(3)(ii)(B) of this section, an option whose exercise price is determined by a formula is considered to have an exercise price equal to the fair market value of the underlying stock on the exercise date if the formula is agreed upon by the parties when the option is issued in a bona fide attempt to arrive at fair market value on the exercise date and is to be applied based upon the facts in existence on the exercise date.

(iv) *Exceptions.* The safe harbors of this paragraph (g)(3) do not apply if—

(A) An arrangement exists that provides the holder or a related party with stockholder rights described in paragraph (g)(1)(vii) of this section (except for rights arising upon a default under the option or a related agreement);

(B) It is intended that through a change in the capital structure of the issuing corporation or a transfer of assets to or from the issuing corporation (other than regular, ordinary dividends) or by any other means, the fair market value of the stock of the issuing corporation will be altered for a principal purpose of increasing the likelihood that the option will be exercised; or

(C) The option is one in a series of related or sequential options, unless all such options satisfy paragraph (g)(3) (i) or (ii) of this section.

(v) *Failure to satisfy safe harbor.* Failure of an option to satisfy one of the safe harbors of this paragraph (g)(3) does not affect the determination of whether an option is treated as reasonably certain to be exercised.

(h) *Examples.* The provisions of this section may be illustrated by the following examples. These examples assume that the measurement dates set forth in the examples are the only measurement dates that have taken place or will take place.

Example 1. (i) P is the common parent of a consolidated group, consisting of P, S, and T. P owns all 100 shares of S's only class of stock, which is voting common stock. P also owns all the stock of T. On June 30, 1992, when the fair market value of the S stock is $40 per share, P sells to U, an unrelated corporation, an option to acquire 40 shares of

the S stock that P owns at an exercise price of $30 per share, exercisable at any time within 3 years after the granting of the option. P and T have had substantial losses for 5 consecutive years while S has had substantial income during the same period. Because P, S, and T have been filing consolidated returns, P and T have been able to use all of their losses to offset S's income. It is anticipated that P, S, and T will continue their earnings histories for several more years. On July 31, 1992, S declares and pays a dividend of $1 per share to P.

(ii) If P, S, and T continue to file consolidated returns after June 30, 1992, it could reasonably be anticipated that P, S, and T would eliminate a substantial amount of federal income tax liability by using P's and T's future losses to offset S's income in consolidated returns. Furthermore, based on the difference between the exercise price of the option and the fair market value of the S stock, it is reasonably certain, on June 30, 1992, a measurement date, that the option will be exercised. Therefore, the option held by U is treated as exercised. As a result, for purposes of determining whether P and S are affiliated, P is treated as owning only 60 percent of the value of outstanding shares of S stock and U is treated as owning the remaining 40 percent. P is still treated as owning 100 percent of the voting power. Because members of the P group are no longer treated as owning stock possessing 80 percent of the total value of the S stock as of June 30, 1992, S is no longer a member of the P group. Additionally, P is not entitled to a 100 percent dividends received deduction under section 243(a)(3) because P and S are also treated as not affiliated for purposes of section 243. P is only entitled to an 80 percent dividends received deduction under section 243(c).

Example 2. (i) The facts are the same as in *Example 1* except that rather than P issuing an option to acquire 40 shares of S stock to U on June 30, 1992, P, pursuant to a plan, issues an option to U1 on July 1, 1992, to acquire 20 shares of S stock, and issues an option to U2 on July 2, 1992, to acquire 20 shares of S stock.

(ii) Because the options issued to U1 and U2 were issued pursuant to a plan, July 2, 1992, constitutes a measurement data for both options. Therefore, both options are aggregated in determining whether the issuance of the options, rather than the sale of the S stock, would result in the elimination of a substantial amount of federal income tax liability. Accordingly, as in *Example 1*, because the continued affiliation of P, S, and T could reasonably be anticipated to result in the elimination of a substantial amount of federal income tax liability and the options are reasonably certain to be exercised, the options are treated as exercised for purposes of determining whether P and S are affiliated, and P and S are no longer affiliated as of July 2, 1992.

Example 3. (i) The facts are the same as in *Example 1* except that the option gives U the right to acquire all 100 shares of the S stock, and U is the common parent of a consolidated group. The U group has had substantial losses for 5 consecutive years and it is anticipated that the U group will continue its earnings history for several more years.

(ii) If P sold the S stock, in lieu of the option, to U, S would become a member of the U group. Because the U group files consolidated returns, if P sold the S stock to U, U would be able to use its future losses to offset future income of S. When viewing the transaction from the effect on all parties, the sale of the option, in lieu of the underlying S stock, does not result in the elimination of federal income tax liability because S's income would be offset by the losses of members of either the P or U group. Accordingly, the option is disregarded and S remains a member of the P group.

Example 4. (i) P is the common parent of a consolidated group, consisting of P and S. P owns 90 of the 100 outstanding shares of S's only class of stock, which is voting common stock, and U, an unrelated corporation, owns the remaining 10 shares. On August 31, 1992, when the fair market value of the S stock is $100 per share, P sells a call option to U that entitles U to purchase 20 shares of S stock from P, at any time before August 31, 1993, at an exercise price of $115 per share. The call option does not provide U with any voting rights, dividend rights, or any other managerial or economic rights ordinarily afforded to owners of the S stock. There is no intention on August 31, 1992, to alter the value of S to increase the likelihood of the exercise of the call option.

(ii) Because the exercise price of the call option is equal to or greater than 90 percent of the fair market value of the S stock on August 31, 1992, a measurement date, the option may be exercised no more than 24 months after the measurement date, and none of the items described in paragraph (g)(3)(iv) of this section that preclude application of the safe harbor are present, the safe harbor of paragraph (g)(3)(i) of this section applies and the call option is treated as if it is not reasonably certain to be exercised. Therefore, regardless of whether the continued affiliation of P and S would result in the elimination of a substantial amount of federal income tax liability, the call option is disregarded in determining whether S remains a member of the P group.

Example 5. (i) The facts are the same as in *Example 4* except that the call option gives U the right to vote similar to that of a shareholder.

(ii) Under paragraph (g)(3)(iv) of this section, the safe harbor of paragraph (g)(3)(i) of this section does not apply because the call

option entitles U to voting rights equivalent to that of a shareholder. Accordingly, all of the facts and circumstances surrounding the sale of the call option must be taken into consideration in determining whether it is reasonably certain that the call option will be exercised.

Example 6. (i) In 1992, two unrelated corporations, X and Y, decide to engage jointly in a new business venture. To accomplish this purpose, X organizes a new corporation, S, on September 30, 1992. X acquires 100 shares of the voting common stock of S, which are the only shares of S stock outstanding. Y acquires a debenture of S which is convertible, on September 30, 1995, into 100 shares of S common stock. If the conversion right is not exercised, X will have the right, on September 30, 1995, to put 50 shares of its S stock to Y in exchange for 50 percent of the debenture held by Y. The likelihood of the success of the venture is uncertain. It is anticipated that S will generate substantial losses in its early years of operation. X expects to have substantial taxable income during the three years following the organization of S.

(ii) Under the terms of this arrangement, it is reasonably certain on September 30, 1992, a measurement date, that on September 30, 1995, either through Y's exercise of its conversion right or X's right to put S stock to Y, that Y will own 50 percent of the S stock. Additionally, it could reasonably be anticipated, on September 30, 1992, a measurement date, that the affiliation of X and S would result in the elimination of a substantial amount of federal income tax liability. Accordingly, for purposes of determining whether X and S are affiliated, X is treated as owning only 50 percent of the value of the S stock as of September 30, 1992, a measurement date, and S is not a member of the X affiliated group.

Example 7. (i) The facts are the same as in *Example 6* except that rather than acquiring 100 percent of the S stock and the right to put S stock to Y, X acquires only 80 percent of the S stock, while S, rather than acquiring a convertible debenture, acquires 20 percent of the S stock, and an option to acquire an additional 30 percent of the S stock. The terms of the option are such that the option will only be exercised if the new business venture succeeds.

(ii) In contrast to *Example 6*, because of the true business risks involved in the start-up of S and whether the business venture will ultimately succeed, along with the fact that X does not have an option to put S stock to Y, it is not reasonably certain on September 30, 1992, a measurement date, that the option will be exercised and that X will only own 50 percent of the S stock on September 30, 1995. Accordingly, the option is disregarded in determining whether S is a member of the X group.

(i) *Effective date.* This section applies, generally, to options with a measurement date on or after February 28, 1992. This section does not apply to options issued prior to February 28, 1992, which have a measurement date on or after February 28, 1992, if the measurement date for the option occurs solely because of an adjustment in the terms of the option pursuant to the terms of the option as it existed on February 28, 1992. Paragraph (b)(2)(iv) of this section applies to stock outstanding on or after February 28, 1992.

[T.D. 8462, 57 FR 61801, Dec. 29, 1992; 58 FR 7041, Feb. 3, 1993]

REGULATIONS APPLICABLE FOR TAX YEARS FOR WHICH A RETURN IS DUE ON OR BEFORE AUGUST 11, 1999

§ 1.1502–9A Application of overall foreign loss recapture rules to corporations filing consolidated returns due on or before August 11, 1999.

(a) *Scope*—(1) *Effective date.* This section applies only to consolidated return years for which the due date of the income tax return (without extensions) is on or before August 11, 1999.

(2) *In general.* Affiliated group of corporations filing a consolidated return sustains an overall foreign loss (a consolidated overall foreign loss) in any taxable year in which its gross income from sources without the United States subject to a separate limitation (as defined in § 1.904(f)–1(c)(2)) is exceeded by the sum of the deductions properly allocated and apportioned thereto. However, for taxable years prior to 1983, affiliated groups may have determined their overall foreign losses for income subject to the passive interest limitation, DISC dividend limitation, and general limitation on a combined basis in accordance with the rules in § 1.904(f)–1(c)(1). The rules contained in §§ 1.904(f)–1 through 1.904(f)–6 are applicable to affiliated groups filing consolidated returns. This section provides special rules for applying those sections to such groups. Paragraph (b) provides rules for additions and subtractions of a portion of overall foreign losses to and from consolidated overall foreign loss accounts. Paragraph (c) requires that separate notional overall

foreign loss accounts be kept for each member of the group that contributes to a consolidated overall foreign loss account and provides for allocation of a portion of the group's overall foreign loss account to a member when the member leaves the group prior to recapture of the entire amount of the loss account. These rules are similar to the rules provided in §1.1502–21(b)(2) (or §1.1502-79A, as appropriate) concerning the apportionment of consolidated net operating losses to a member who leaves the group. However, the rules differ somewhat because the absorption rule of §1.1502–21(b)(1) (or §1.1502-79A, as appropriate) is applied year-by-year, consistently with the sequence rules of section 172(b), and recapture of overall foreign losses is based on overall foreign loss accounts that may consist of losses in more than one year. Paragraph (d) provides rules for recapture of amounts in consolidated overall foreign loss accounts. Paragraph (e) provides special rules pertaining to section 904(f)(3) dispositions between members of a group. Paragraphs (b), (c), and (e) also contain special rules that apply to overall foreign losses that arise in separate return limitation years; the principles therein also apply to overall foreign losses when there has been a consolidated return change of ownership (as defined in §1.1502–1(g)). See §1.1502–9T(b)(1)(v) for the rule that ends the separate return limitation year limitation for consolidated return years for which the due date of the income tax return (without extensions) is after March 13, 1998, and §1.1502–9T(b)(1)(vi) for an election to continue the separate return limitation year limitation for consolidated return years beginning before January 1, 1998. See also §1.1502–3(d)(4) for an optional effective date rule (generally making the rules of paragraphs (b)(1)(iii) and (iv) of this section inapplicable for a consolidated return year beginning after December 31, 1996, if the due date of the income tax return (without extensions) for such year is on or before March 13, 1998).

(b) *Consolidated overall foreign loss accounts.* Any group that sustains an overall foreign loss (or acquires a member with a balance in an overall foreign loss account) must establish a consolidated overall foreign loss account for such loss, and amounts shall be added to and subtracted from such account as provided in §§1.904(f)–1 through 1.904(f)–6 and this section.

(1) *Additions to the consolidated overall foreign loss accounts*—(i) *Consolidated overall foreign losses.* Any consolidated overall foreign loss shall be added to the applicable consolidated overall foreign loss account for such separate limitation, to the extent that the overall foreign loss has reduced United States source income, in accordance with the rules of §§1.904(f)–1 and 1.904(f)–3.

(ii) *Overall foreign losses from separate return years.* If a corporation joins in the filing of a consolidated return in a taxable year in which such corporation has a balance in an overall foreign loss account from a prior separate return year that is not a separate return limitation year, such balance shall be added to the applicable consolidated overall foreign loss account in such year and treated as a consolidated overall foreign loss incurred in the previous year (and shall therefore be subject to recapture, in accordance with paragraph (d) of this section, beginning in the same year in which it is added to the consolidated overall foreign loss account).

(iii) *Overall foreign losses from separate return limitation years.* If a corporation joins in the filing of a consolidated return in a taxable year in which such corporation has a balance in an overall foreign loss account from a prior separate return limitation year, such balance shall be added to the applicable consolidated overall foreign loss account in such consolidated return year to the extent of the lesser of the balance in the overall foreign loss account from the separate return limitation year or 50 percent (or such larger percentage as the taxpayer may elect) of the difference between the consolidated foreign source taxable income subject to the same separate limitation (computed in accordance with §§1.904(f)–2(b) and 1.1502–4(d)(1)) minus such consolidated foreign source taxable income recomputed by excluding the items of income and deduction of such corporation (but not less than zero). The amount added to a consolidated overall foreign loss account in any taxable

year under this paragraph (b)(1)(iii) shall be treated as a consolidated overall foreign loss in the previous year (and shall therefore be subject to recapture, in accordance with paragraph (d) of this section, beginning in the same year in which it is added to the consolidated overall foreign loss account).

(iv) *Overall foreign losses that are part of a net operating loss or net capital loss carried over from a separate return limitation year.* Overall foreign losses that are part of a net operating loss or net capital loss carryover from a separate return limitation year of a member that is absorbed in a consolidated return year shall be treated as though they were added to an overall foreign loss account in a separate return limitation year of such member and will be subject to the limitation on recapture of SRLY losses contained in paragraph (b)(1)(iii) of this section. See paragraph (c)(2) of this section for rules regarding the addition of such losses to the applicable overall foreign loss account of such member.

(v) *Special effective date for SRLY limitation.* Except as provided in paragraph (b)(1)(vi) of this section, paragraphs (b)(1)(iii) and (iv) of this section apply only to consolidated return years for which the due date of the income tax return (without extensions) is on or before March 13, 1998. For consolidated return years for which the due date of the income tax return (without extensions) is after March 13, 1998, the rules of paragraph (b)(1)(ii) of this section shall apply to overall foreign losses from separate return years that are separate return limitation years. For purposes of applying paragraph (b)(1)(ii) of this section in such years, the group treats a member with a balance in an overall foreign loss account from a separate return limitation year on the first day of the first consolidated return year for which the due date of the income tax return (without extensions) is after March 13, 1998, as a corporation joining the group on such first day. An overall foreign loss that is part of a net operating loss or net capital loss carryover from a separate return limitation year of a member that is absorbed in a consolidated return year for which the due date of the income tax return (without extensions) is after March 13, 1998, shall be added to the appropriate consolidated overall foreign loss account in the year that it is absorbed. For consolidated return years for which the due date of the income tax return (without extensions) is after March 13, 1998, similar principles apply to overall foreign losses when there has been a consolidated return change of ownership (regardless of when the change of ownership occurred). See also §1.1502–3(d)(4) for an optional effective date rule (generally making this paragraph (b)(1)(v) applicable to a consolidated return year beginning after December 31, 1996, if the due date of the income tax return (without extensions) for such year is on or before March 13, 1998).

(vi) *Election to defer application of special effective date.* A consolidated group may elect not to apply paragraph (b)(1)(v) of this section to consolidated return years beginning before January 1, 1998. To make this election, a consolidated group must write ''Election Pursuant to Notice 98–40'' across the top of page 1 of an original or amended tax return for each consolidated return year subject to the election. For the first consolidated return year to which the overall foreign loss provisions of paragraph (b)(1)(v) of this section apply (i.e., the first year beginning on or after January 1, 1998), such consolidated group must write ''Notice 98–40 Election in Effect in Prior Years'' across the top of page 1 of the consolidated tax return for that year. For purposes of applying paragraph (b)(1)(ii) of this section with respect to such year, any member with a balance in an overall foreign loss account from a separate return limitation year on the first day of such year shall be treated as joining the group on such first day.

(2) *Reductions of the consolidated overall foreign loss accounts*—(i) *Amounts allocated to members leaving the group.* When a member leaves the group, each applicable consolidated overall foreign loss account shall be reduced by the amount allocated from such account to such member in accordance with paragraph (c)(3)(i) of this section.

(ii) *Amounts recaptured.* A consolidated overall foreign loss account shall

be reduced by the amount of any overall foreign loss under the same separate limitation that is recaptured from consolidated income in accordance with § 1.904(f)–2.

(c) *Allocation of overall foreign losses among members of an affiliated group*—(1) *Notional overall foreign loss accounts.* Separate notional overall foreign loss accounts shall be established for each member of a group that contributes to a consolidated overall foreign loss account. Additions to and reductions of such notional accounts shall be made when additions or reductions are made to consolidated overall foreign loss accounts in accordance with paragraph (b) of this section and § 1.904(f)–1.

(i) *Additions to notional accounts*—(A) *Consolidated overall foreign losses.* When a consolidated overall foreign loss is added to a consolidated overall foreign loss account, each member shall add its pro rata share of the amount of such loss to the member's notional overall foreign loss account. A member's pro rata share of a consolidated overall foreign loss for any taxable year is determined by multiplying the consolidated loss by a fraction.The numerator of this fraction is the amount by which the member's separate gross income for the taxable year from sources without the United States subject to the applicable separate limitation is exceeded by the sum of the deductions properly allocated and apportioned thereto (including such member's share of any consolidated net operating loss deduction and consolidated net capital loss carryovers and carrybacks to the taxable year), for each member with such deductions in excess of such income. The denominator of this fraction is the sum of the numerators of this fraction for all such members of the group.

(B) *Overall foreign losses from separate return years and separate return limitation years.* When an amount from a member's overall foreign loss account from a separate return year or separate return limitation year is added to a consolidated overall foreign loss account in accordance with paragraph (b)(1) (ii) or (iii) of this section, such amount shall also be added to that member's notional overall foreign loss account for such separate limitation.

(ii) *Reductions of notional accounts.* When a consolidated overall foreign loss account is reduced by recapture, in accordance with paragraph (b)(2)(ii) of this section, each member of the group shall reduce its notional overall foreign loss account for that separate limitation by its pro rata share of the amount by which the consolidated overall foreign loss account is reduced. A member's pro rata share of the amount by which a consolidated overall foreign loss account is reduced and determined by multiplying the amount recaptured by a fraction, the numerator of which is the amount in such member's notional account under such separate limitation, and the denominator of which is the amount in the consolidated overall foreign loss account under such separate limitation before reduction for the amount recaptured for that taxable year.

(2) *Overall foreign losses that are part of a net operating loss or net capital loss from a separate return limitation year.* An overall foreign loss that is part of a net operating loss or net capital loss carryover from a separate return limitation year of a member that is absorbed in a consolidated return year shall be treated as an overall foreign loss of such member (rather than the group) and shall be added to such member's separate overall foreign loss account to the extent it reduces United States source income, in accordance with § 1.904(f)–1(d)(5). Such overall foreign losses shall be added to the appropriate consolidated overall foreign loss account in later years in accordance with paragraph (b)(1)(iii) of this section.

(3) *Allocation of a portion of overall foreign loss accounts to a member leaving the group*—(i) *Consolidated overall foreign losses.* When a corporation ceases to be a member of an affiliated group filing consolidated returns, a portion of the balance in each applicable consolidated overall foreign loss account shall be allocated to such corporation. The amount allocated to such corporation shall be equal to the amount, if any, in such member's notional overall foreign loss account under the same separate limitation.

(ii) *Overall foreign losses from separate return limitation years.* When a corporation ceases to be a member of an affiliated group filing consolidated returns, it shall take with it the remaining portion of each separate overall foreign loss account for overall foreign losses from separate return limitation years (including amounts added to such accounts under paragraph (c)(2) of this section).

(d) *Recapture of consolidated overall foreign losses.* The amount in any consolidated overall foreign loss account shall be recaptured under §§ 1.904(f)–1 through 1.904(f)–6 by recharacterizing consolidated foreign source taxable income subject to the separate limitation under which the loss arose as United States source taxable income. For purposes of recapture, consolidated foreign source taxable income subject to the separate limitation under which the loss arose shall be determined in accordance with §§ 1.904(f)–2 and 1.1502–4. Amounts in a member's excess loss account that are included in income under § 1.1502–19 shall be subject to recapture to the extent that they are included in consolidated foreign source taxable income subject to the separate limitation under which the loss arose.

(e) *Dispositions of property between members of the same affiliated group during a consolidated return year*—(1) *In general.* Except as provided in paragraph (2) with respect to overall foreign losses of a selling member from a separate return limitation year, the rules of § 1.1502–13 with respect to intercompany transactions will apply to dispositions of property to which section 904(f)(3)(A) applies.

(2) *Recapture of overall foreign loss from a separate return limitation year.* Paragraph (1) will not apply and gain will be recognized to the extent that the selling member has a balance in its overall foreign loss account from a separate return limitation year unless the selling member adds the entire amount of its overall foreign loss account from separate return limitation years to the applicable consolidated overall foreign loss account and treats such amount as an overall foreign loss incurred in the previous year. Such loss shall be subject to recapture, in accordance with paragraph (d) of § 1.1502–9, beginning in the same year in which it is added to the consolidated overall foreign loss account.

(f) *Illustrations.* The provisions of this section are illustrated by the following examples. All foreign source income or loss in these examples is subject to the general limitation.

Example (1). A, B, and C are the members of an affiliated group of corporations (as defined in section 1504), and all use the calendar year as their taxable year. For 1983, A, B, and C file a consolidated return. ABC has United States source income of $1,000 and foreign source losses (overall foreign loss) of $400. In accordance with paragraph (b)(1)(i) of this section, ABC adds $400 to its consolidated overall foreign loss account at the end of 1983. For 1983, the separate foreign source taxable income (or loss) of A is $400, of B is ($200), and of C is ($600). Under paragraph (c)(1) of this section, B and C must establish separate notional overall foreign loss accounts. Under paragraph (c)(1)(i)(A) of this section, the amount added to each notional account is the pro rata share of the consolidated overall foreign loss of each member contributing to such loss. The pro rata share is determined by multiplying the consolidated loss by the member's proportionate share of the total foreign source losses of all members having such losses. B's foreign source loss if $200 and C's foreign source loss is $600, totaling $800. B must add $400x200/800, or $100, to its notional overall foreign loss account. C must add $400x600/800, or $300, to its notional overall foreign loss account.

Example (2). The facts are the same as in example (1). In 1984, ABC has consolidated foreign source taxable income of $200. Under paragraph (d) of this section and § 1.904(f)–2, ABC is required to recapture $100 of the amount in its consolidated overall foreign loss account, which reduces that account by $100 under paragraph (b)(2)(ii) of this section. In accordance with paragraph (c)(1)(ii) of this section, B reduces its notional account by $100x100/400, or $25, and C reduces it notional account by $100x300/400, or $75. At the end of 1984 ABC has $300 in its consolidated overall foreign loss account, B has $75 in its notional account, and C has $225 in its notional account.

Example (3). D and E are members of an affiliated group and file separate returns using the calendar year as their taxable year for 1980. In 1980, D has an overall foreign loss of $200, which it adds to its overall foreign loss account, and E has no overall foreign losses. For 1981, D and E file a consolidated return, and DE must establish a consolidated overall foreign loss account, to which D's overall foreign loss from 1980 is added under paragraph (b)(1)(ii) of this section. D also adds the same amount $200 to its notional account

under paragraph (c)(1)(i)(B) of this section. In 1981, DE has consolidated foreign source taxable income of $300. Since the amount added to the consolidated overall foreign loss account in 1981 is treated as a consolidated overall foreign loss from 1980, DE must recapture $150 in 1981 under paragraph (d) of this section and § 1.904(f)–2. DE's consolidated overall foreign loss account is reduced by $150 under paragraph (b)(2)(ii) of this section, and D's notional account is reduced by $150 under paragraph (c)(1)(ii) of this section, leaving balances of $50 in each of those accounts at the end of 1981.

Example (4). F and G are not members of an affiliated group in 1980, and G has an overall foreign loss of $200, which it adds to its overall foreign loss account. F has no overall foreign loss. On January 1, 1981, F acquires G, and FG files a consolidated return for the calendar year 1981. In 1981, F has no foreign source taxable income or loss, and G has $100 of foreign source taxable income. FG's consolidated foreign source taxable income, $100, minus such income without G's items of income and deduction, $0, is $100. Therefore 50% of that amount, $50, of G's overall foreign loss from its 1980 separate return limitation year is added to FG's consolidated overall foreign loss account under paragraph (b)(1)(iii) of this section, and the same amount is added to G's notional account under paragraph (c)(1)(i)(B) of this section. In accordance with paragraph (d) of this section and § 1.904(f)–2, FG must recapture the $50 balance in its consolidated overall foreign loss account in 1981 because the amount added from G's separate return limitation year is treated as a 1980 consolidated overall foreign loss. At the end of 1981, FG has a balance of $0 in its consolidated overall foreign loss account, G has $0 in its notional account, and G also has $150 remaining from its 1980 overall foreign loss that has not yet been added to the consolidated overall foreign loss account.

On January 1, 1982, F sells G and G leaves the affiliated group. Under paragraph (c)(3)(i) of this section, G takes with it the balance in its overall foreign loss account from 1980 (its prior separate return limitation year) that has not been added to the consolidated account. G has $150 of overall foreign loss in its overall foreign loss account. Because the amount in the consolidated overall foreign loss account is zero, no amount from that account is allocated to G.

Example (5). (i) In 1982 corporation H has United States source income of $300 and foreign source losses of $500, resulting in a net operating loss of $200 and a balance in H's overall foreign loss account at the end of 1982 of $300.

(ii) On January 1, 1983, H is acquired by J, and for the calendar year 1983 JH files a consolidated return. JH has consolidated taxable income of $700 in 1983, including a consolidated net operating loss deduction of $100. This net operating loss deduction is $100 of H's $200 net operating loss from 1982 (a separate return limitation year), which is limited by § 1.1502–21A(c). For 1983, H has separate taxable income of $100, comprised of $100 of United States source taxable income and zero foreign source taxable income, and J has separate taxable income of $700, comprised of $700 of United States source taxable income and zero foreign source taxable income. Under paragraph (c)(2) of this section, H adds $100 to its separate overall foreign loss account, since that amount of its net operating loss has reduced United States source income. H has $400 in its separate overall foreign loss account at the end of 1983, none of which has been added to a consolidated overall foreign loss account.

(iii) In 1984, H has separate taxable income of $400, comprised of $100 of United States source taxable income and $300 of foreign source taxable income. J has separate taxable income of $900, comprised of $700 of United States source taxable income and $200 of foreign source taxable income. JH has consolidated taxable income of $1200, which includes $100 of consolidated net operating loss deduction from H's 1982 net operating loss. Since this net operating loss deduction is allocated to foreign source income, it does not reduce United States source income and will not be added to an overall foreign loss account. Under paragraph (b)(1)(iii) of this section, $100, from H's overall foreign loss is added to the consolidated overall foreign loss account computed as follows:

Consolidated foreign source taxable income	$400
Consolidated foreign source taxable income recomputed by excluding H's foreign source income and deduction	−200
$200.	
× 50%	$100
Amount from H's separate return limitation year overall foreign loss account added to the consolidated overall foreign loss account	$100

This amount is subject to recapture beginning in the same taxable year, as it is treated as a consolidated overall foreign loss incurred in a previous year. Therefore, under paragraph (d) of this section and § 1.904(f)–2 JH also recaptures this $100, reducing the consolidated overall foreign loss account to $0. H has $300 remaining in its separate overall foreign loss account at the end of 1984.

(iv) In 1985, H has separate taxable income of $400, comprised of $100 of United States source taxable income and $300 of foreign source taxable income. J has separate taxable income of $300 comprised of $600 of United States source taxable income and $300

of foreign source losses. JH has consolidated taxable income of $700, all of which is United States source. Under paragraph (b)(1)(iii) of this section an additional $150 from H's separate overall foreign loss is added to the consolidated overall foreign loss account, computed as follows:

Consolidated foreign source taxable income	$0
Consolidated foreign source taxable income recomputed by excluding H's foreign source income and deductions	−(300)
300.	
× 50%	$150
Amount from H's separate return limitation year overall foreign loss account added to the consolidated overall foreign loss account	$150

Thus, an additional $150 of H's separate overall foreign loss is added to the consolidated overall foreign loss account, and, under paragraph (c)(1)(i)(B) of this section, the same amount is added to J's notional account. While this amount is subject to recapture beginning in the same taxable year, JH has no consolidated foreign source taxable income in 1985, so no overall foreign loss is recaptured. H has a remaining balance of $150 in its separate return limitation year overall foreign loss account and HJ has $150 in its consolidated overall foreign loss account.

Example (6). A, B, and C are members of an affiliated group of corporations (as defined in section 1504), and all use the calendar year as their taxable year. For 1986, A, B, and C file a consolidated return. A has an overall foreign loss account which arose in a separate return limitation year. The amount in the overall foreign loss account is $2,000. A makes a disposition of all its assets to B on January 1, 1986. The gain on the transfer is $1,500, all of which would be recognized under section 904(f)(3). However, if A adds the total amount of its overall foreign loss from separate return limitation years to ABC's consolidated overall foreign loss account, no gain will be recognized on the transfer until the intercompany gain is taken into account under § 1.1502–13. In the interim, any foreign source gain of the purchasing member (or any other member of the consolidated group) may be used to recapture on a consolidated basis the amount in ABC's consolidated overall foreign loss account.

[T.D. 8153, 52 FR 32005, Aug. 25, 1987; 52 FR 43434, Nov. 12, 1987, as amended by T.D. 8597, 60 FR 36679, July 18, 1995; T.D. 8677, 61 FR 33323, June 27, 1996; T.D. 8766, 63 FR 12643, Mar. 16, 1998; T.D. 8800, 63 FR 71590, Dec. 29, 1998; T.D. 8823, 64 FR 36099, July 2, 1999; Redesignated and amended by T.D. 8833, 64 FR 43615, Aug. 11, 1999; T.D. 8884, 65 FR 33760, May 25, 2000]

REGULATIONS APPLICABLE TO TAXABLE YEARS BEFORE JANUARY 1, 1997

§ 1.1502–15A Limitations on the allowance of built-in deductions for consolidated return years beginning before January 1, 1997.

(a) *Limitation on built-in deductions*—(1) *General rule*. Built-in deductions (as defined in subparagraph (2) of this paragraph) for a taxable year shall be subject to the limitation of § 1.1502–21A(c) (determined without regard to such deductions and without regard to net operating loss carryovers to such year) and the limitation of § 1.1502–22A(c) (determined without regard to such deductions and without regard to capital loss carryovers to such year). If as a result of applying such limitations, built-in deductions are not allowable in such consolidated return year, such deductions shall be treated as a net operating loss or net capital loss (as the case may be) sustained in such year and shall be carried to those taxable years (consolidated or separate) to which a consolidated net operating loss or a consolidated net capital loss could be carried under §§ 1.1502–21A, 1.1502–22A and 1.1502–79A, (or §§ 1.1502-21T and 1.1502-22T, as appropriate) except that such losses shall be treated as losses subject to the limitations contained in §§ 1.1502–21T(c) or 1.1502-22T(c) (or §§ 1.1502-21A(c), 1.1502–22A(c), as appropriate), as the case may be. Thus, for example, if member X sells a capital asset during a consolidated return year at a $1,000 loss and such loss is treated as a built-in deduction, then such loss shall be subject to the limitation contained in § 1.1502–22(c), which, in general, would allow such loss to be offset only against X's own capital gain net income (net capital gain for taxable years beginning before January 1, 1977). Assuming X had no capital gain net income (net capital gain for taxable years beginning before January 1, 1977) reflected in such year (after taking into account its capital losses, other than capital loss carryovers and the built-in deduction), such $1,000 loss shall be treated as a net capital loss and shall be carried over for 5 years under § 1.1502–22, subject to the limitation contained in § 1.1502–22(c) for consolidated return years.

(2) *Built-in deductions.* (i) For purposes of this paragraph, the term ''built-in deductions'' for a consolidated return year means those deductions or losses of a corporation which are recognized in such year, or which are recognized in a separate return year and carried over in the form of a net operating or net capital loss to such year, but which are economically accrued in a separate return limitation year (as defined in §1.1502–1(f)). Such term does not include deductions or losses incurred in rehabilitating such corporation. Thus, for example, assume P is the common parent of a group filing consolidated returns on the basis of a calendar year and that P purchases all of the stock of S on December 31, 1966. Assume further that on December 31, 1966, S owns a capital asset with an adjusted basis of $100 and a fair market value of $50. If the group files a consolidated return for 1967, and S sells the asset for $30, $50 of the $70 loss is treated as a built-in deduction, since it was economically accrued in a separate return limitation year. If S sells the asset for $80 instead of $30, the $20 loss is treated as a built-in deduction. On the other hand, if such asset is a depreciable asset and is not sold by S, depreciation deductions attributable to the $50 difference between basis and fair market value are treated as built-in deductions.

(ii) In determining, for purposes of subdivision (i) of this subparagraph, whether a deduction or loss with respect to any asset is economically accrued in a separate return limitation year, the term ''predecessor'' as used in §1.1502–1(f)(1) shall include any transferor of such asset if the basis of the asset in the hands of the transferee is determined (in whole or in part) by reference to its basis in the hands of such transferor.

(3) *Transitional rule.* If the assets which produced the built-in deductions were acquired (either directly or by acquiring a new member) by the group on or before January 4, 1973, and the separate return limitation year in which such deductions were economically accrued ended before such date, then at the option of the taxpayer, the provisions of this paragraph before amendment by T.D. 7246 shall apply, and, in addition, if such assets were acquired on or before April 17, 1968, and the separate return limitation year in which the built-in deductions were economically accrued ended on or before such date, then at the option of the taxpayer, the provisions of §1.1502–31A(b)(9)(as contained in the 26 C.F.R. edition revised as of April 1, 1996) shall apply in lieu of this paragraph.

(4) *Exceptions.* (i) Subparagraphs (1), (2), and (3) of this paragraph shall not limit built-in deductions in a taxable year with respect to assets acquired (either directly or by acquiring a new member) by the group if:

(a) The group acquired the assets more than 10 years before the first day of such taxable year, or

(b) Immediately before the group acquired the assets, the aggregate of the adjusted basis of all assets (other than cash, marketable securities, and goodwill) acquired from the transferor or owned by the new member did not exceed the fair market value of all such assets by more than 15 percent.

(ii) For purposes of subdivision (i)*(b)* of this subparagraph, a security is not a marketable security if immediately before the group acquired the assets:

(a) The fair market value of the security is less than 95 percent of its adjusted basis, or

(b) The transferor or new member had held the security for at least 24 months, or

(c) The security is stock in a corporation at least 50 percent of the fair market value of the outstanding stock of which is owned by the transferor or new member.

(b) *Effective date.* This section applies to any consolidated return years to which §1.1502–21T does not apply. See §1.1502–21T(g) for effective dates of that section.

[T.D. 6894, 31 FR 11794, Sept. 8, 1966, as amended by T.D. 6909, 31 FR 16695, Dec. 30, 1966; T.D. 7246, 37 FR 761, Jan. 4, 1972; T.D. 7728, 45 FR 72650, Nov. 3, 1980; T.D. 8677, 61 FR 33323, June 27, 1996. Redesignated and amended by T.D. 8677, 61 FR 33326, June 27, 1996]

§ 1.1502–21A Consolidated net operating loss deduction generally applicable for consolidated return years beginning before January 1, 1997.

(a) *In general.* The consolidated net operating loss deduction shall be an amount equal to the aggregate of the consolidated net operating loss carryovers and carrybacks to the taxable year (as determined under paragraph (b) of this section).

(b) *Consolidated net operating loss carryovers and carrybacks*—(1) *In general.* The consolidated net operating loss carryovers and carrybacks to the taxable year shall consist of any consolidated net operating losses (as determined under paragraph (f) of this section) of the group, plus any net operating losses sustained by members of the group in separate return years, which may be carried over or back to the taxable year under the principles of section 172(b). However, such consolidated carryovers and carrybacks shall not include any consolidated net operating loss apportioned to a corporation for a separate return year pursuant to § 1.1502–79A(a), and shall be subject to the limitations contained in paragraphs (c), (d), and (e) of this section and to the limitation contained in § 1.1502–15A (or § 1.1502–11(c), as appropriate).

(2) *Rules for applying section 172(b)(1)*—(i) *Regulated transportation corporations.* For purposes of applying section 172(b)(1)(C) (relating to net operating losses sustained by regulated transportation corporations), in the case of a consolidated net operating loss sustained in a taxable year for which a member of the group was a regulated transportation corporation (as defined in section 172(j)(1)), the portion, if any, of such consolidated net operating loss which is attributable to such corporation (as determined under this paragraph shall be a carryover to the sixth taxable year following the loss year only if such corporation is a regulated transportation corporation for such sixth year, and shall be a carryover to the seventh taxable year following the loss year only if such corporation is a regulated transportation corporation for both such sixth and seventh years.

(ii) *Trade expansion losses.* In the case of a carryback of a consolidated net operating loss from a taxable year for which a member of the group has been issued a certification under section 317 of the Trade Expansion Act of 1962 and with respect to which the requirements of section 172(b)(3)(A) have been met, section 172(b)(1)(A)(ii) shall apply only to the portion of such consolidated net operating loss attributable to such member.

(iii) *Foreign expropriation losses.* An election under section 172(b)(3)(C) (relating to 10-year carryover of portion of net operating loss attributable to a foreign expropriation loss) may be made for a consolidated return year only if the sum of the foreign expropriation losses (as defined in section 172(k)) of the members of the group for such year equals or exceeds 50 percent of the consolidated net operating loss for such year. If such election is made, the amount which may be carried over under section 172(b)(1)(D) is the smaller of *(a)* the sum of such foreign expropriation losses, or *(b)* the consolidated net operating loss.

(3) *Absorption rules.* For purposes of determining the amount, if any, of a net operating loss (whether consolidated or separate) which can be carried to a taxable year (consolidated or separate), the amount of such net operating loss which is absorbed in a prior consolidated return year under section 172(b)(2) shall be determined by:

(i) Applying all net operating losses which can be carried to such prior year in the order of the taxable years in which such losses were sustained, beginning with the taxable year which ends earliest, and

(ii) Applying all such losses which can be carried to such prior year from taxable years ending on the same date on a pro rata basis, except that any portion of a net operating loss attributable to a foreign expropriation loss to which section 172(b)(1)(D) applies shall be applied last.

(c) *Limitation on net operating loss carryovers and carrybacks from separate return limitation years*—(1) *General rule.* In the case of a net operating loss of a member of the group arising in a separate return limitation year (as defined in paragraph (f) of § 1.1502–1) of such

member (and in a separate return limitation year of any predecessor of such member), the amount which may be included under paragraph (b) of this section (computed without regard to the limitation contained in paragraph (d) of this section) in the consolidated net operating loss carryovers and carrybacks to a consolidated return year of the group shall not exceed the amount determined under subparagraph (2) of this paragraph.

(2) *Computation of limitation*. The amount referred to in subparagraph (1) of this paragraph with respect to a member of the group is the excess, if any, of:

(i) Consolidated taxable income (computed without regard to the consolidated net operating loss deduction), minus such consolidated taxable income recomputed by excluding the items of income and deduction of such member, over

(ii) The net operating losses attributable to such member which may be carried to the consolidated return year arising in taxable years ending prior to the particular separate return limitation year.

(3) *Examples*. The provisions of this paragraph and paragraphs (a) and (b) of this section may be illustrated by the following examples:

Example (1). (i) Corporation P formed corporations S and T on January 1, 1965. P, S, and T filed separate returns for the calendar year 1965, a year for which an election under section 1562 was effective. T's return for that year reflected a net operating loss of $10,000. The group filed a consolidated return for 1966 reflecting consolidated taxable income of $30,000 (computed without regard to the consolidated net operating loss deduction). Among the transactions occurring during 1966 were the following:

(a) P sold goods to T deriving deferred profits of $7,000 on such sales, $2,000 of which was restored to consolidated taxable income on the sale of such goods to outsiders;

(b) T sold a machine to S deriving a deferred profit of $5,000, $1,000 of which was restored to consolidated taxable income as a result of S's depreciation deductions;

(c) T distributed a $3,000 dividend to P; and

(d) In addition to the transactions described above, T had other taxable income of $6,000.

(ii) The carryover of T's 1965 net operating loss to 1966 is subject to the limitation contained in this paragraph, since 1965 was a separate return limitation year (an election under section 1562 was effective for such year). Thus, only $7,000 of T's $10,000 net operating loss is a consolidated net operating loss carryover to 1966, since such carryover is limited to consolidated taxable income (computed without regard to the consolidated net operating loss deduction), $30,000, minus such consolidated taxable income recomputed by excluding the items of income and deduction of T, $23,000 (*i.e.*, consolidated taxable income computed without regard to the $1,000 restoration of T's deferred gain and T's $6,000 of other income). In making such recomputation, no change is made in the effect on consolidated taxable income of P's sale to T, or of the dividend from T to P.

Example (2). (i) Corporation P was formed on January 1, 1966. P filed separate returns for the calendar years 1966 and 1967 reflecting net operating losses of $4,000 and $12,000, respectively. P purchased corporation S on March 15, 1967. S was formed on February 1, 1966, and filed a separate return for the taxable year ending January 31, 1967. S also filed a short period return for the period from February 1 to December 31, 1967, and joined with P in filing a consolidated return for 1968. S sustained net operating losses of $5,000 and $6,000 for its taxable years ending January 31, 1967, and December 31, 1967, respectively. An election under section 1562 was not effective for P and S during the period involved. Consolidated taxable income for 1968 (computed without regard to the consolidated net operating loss deduction) was $16,000; such consolidated taxable income recomputed by disregarding the items of income and deduction of S was $9,000.

(ii) In order of time, the following losses are absorbed in 1968:

(a) P's $4,000 net operating loss for the calendar year 1966 (such loss is not subject to the limitation contained in this paragraph since P is the common parent corporation for 1968);

(b) S's $5,000 net operating loss for the year ended January 31, 1967. Such loss is subject to the limitation contained in this paragraph, since S was not a member of the group on each day of such year. However, such loss can be carried over and absorbed in full since such limitation is $7,000 (consolidated taxable income computed without regard to the consolidated net operating loss deduction, $16,000, minus such consolidated taxable income recomputed, $9,000); and

(c) $6,000 of P's net operating loss and $1,000 of S's net operating loss for the taxable years ending December 31, 1967. This is determined by applying the losses from such year which can be carried to 1968 (P's $12,000 loss and $2,000 of S's $6,000 loss, since such $6,000 loss is limited under this paragraph) on a pro rata basis against the amount of such losses which can be absorbed in that year, $7,000 (consolidated taxable income of $16,000 less the $9,000 of losses absorbed from prior

years). The carryover of S's loss to 1968 is subject to the limitation contained in that paragraph, since S was not a member of the group on each day of its taxable year ending December 31, 1967. Such loss is limited to $2,000, the excess of $7,000 (as determined under (ii)*(b))* over $5,000 (S's carryover from the year ended January 31, 1967). If a consolidated return is filed in 1969, the consolidated net operating loss carryovers will consist of P's unabsorbed loss of $6,000 ($12,000 minus $6,000) from 1967 and, subject to the limitation contained in this paragraph, S's unabsorbed loss of $5,000 ($6,000 minus $1,000) from its year ended December 31, 1967.

(d) *Limitation on carryovers where there has been a consolidated return change of ownership*—(1) *General rule.* If a consolidated return change of ownership (as defined in paragraph (g) of §1.1502–1) occurs during the taxable year or an earlier taxable year, the amount which may be included under paragraph (b) of this section in the consolidated net operating loss carryovers to the taxable year with respect to the aggregate of the net operating losses attributable to old members of the group (as defined in paragraph (g)(3) of §1.1502–1) arising in taxable years (consolidated or separate) ending on the same day and before the taxable year in which the consolidated return change of ownership occurred shall not exceed the amount determined under subparagraph (2) of this paragraph.

(2) *Computation of limitation.* The amount referred to in subparagraph (1) of this paragraph shall be the excess of:

(i) The consolidated taxable income for the taxable year (determined without regard to the consolidated net operating loss deduction) recomputed by including only the items of income and deduction of the old members of the group, over

(ii) The sum of the net operating losses attributable to the old members of the group which may be carried to the taxable year arising in taxable years ending prior to the particular loss year or years.

(3) *Example.* The provisions of this paragraph may be illustrated by the following example:

Example. (i) Corporation P is formed on January 1, 1967, and on the same day it forms corporation S. P and S file a consolidated return for the calendar year 1967, reflecting a consolidated net operating loss of $500,000. On January 1, 1968, individual X purchases all of the outstanding stock of P. X subsequently contributes $1,000,000 to P and P purchases the stock of corporation T. P, S, and T file a consolidated return for 1968 reflecting consolidated taxable income of $600,000 (computed without regard to the consolidated net operating loss deduction). Such consolidated taxable income recomputed by including only the items of income and deduction of P and S is $350,000.

(ii) Since a consolidated return change of ownership took place in 1968 (there was more than a 50 percent change of ownership of P), the amount of the consolidated net operating loss from 1967 which can be carried over to 1968 is limited to $350,000, the excess of $350,000 (consolidated taxable income recomputed by including only the items of income and deduction of the old members of the group, P and S) over zero (the amount of the consolidated net operating loss carryovers attributable to the old members of the group arising in taxable years ending before 1967).

(4) *Cross-reference.* See §1.1502–21T(d)(1) for the rule that applies the principles of this paragraph (d) in consolidated return years beginning on or after January 1, 1997, with respect to a consolidated return change of ownership occurring before January 1, 1997.

(e) *Limitations on net operating loss carryovers under section 382*—(1) *Section 382(a).* (i) If at the end of a taxable year (consolidated or separate) there has been an increase in ownership of the stock of the common parent of a group (within the meaning of section 382(a)(1)(A) and (B)), and any member of the group has not continued to carry on a trade or business substantially the same as that conducted before any such increase (within the meaning of section 382(a)(1)(C)), then the portion of any consolidated net operating loss sustained in prior taxable years attributable to such member (as determined under this paragraph shall not be allowed as a carryover to such taxable year or to any subsequent taxable year.

(ii) If the provisions of section 382(a) disallow the deduction of a net operating loss carryover from a separate return year of a member of the group to a subsequent taxable year, no amount shall be included under paragraph (b) of this section as a consolidated net operating loss carryover to such a subsequent consolidated return year with respect to such separate return year of such member.

(iii) The provisions of this subparagraph may be illustrated by the following example:

Example. P, S, and T file a consolidated return for the calendar year 1969, reflecting a consolidated net operating loss attributable in part to each member. P owns 80 percent of S's stock and S owns 80 percent of T's stock. On January 1, 1970, A purchases 50 percent of P's stock. During 1970 T's business is discontinued. Since there has been a 50 percentage point increase in ownership of P, the common parent of the group, and since T has not continued to carry on the same trade or business after such increase, the portion of the 1969 consolidated net operating loss attributable to T shall not be included in any net operating loss deduction for 1970 or for any subsequent taxable years, whether consolidated or separate.

(2) *Section 382(b).* If a net operating loss carryover from a separate return year of a predecessor of a member of the group to the taxable year is reduced under the provisions of section 382(b), the amount included under paragraph (b) of this section with respect to such predecessor shall be so reduced.

(3) *Effective date.* This paragraph (e) disallows or reduces the net operating loss carryovers of a member as a result of a transaction to which old section 382 (as defined in §1.382–2T(f)(21)) applies. See §1.1502–21T(d)(2) for the rule that applies the principles of this paragraph (e) in consolidated return years beginning on or after January 1, 1997, with respect to such a transaction.

(f) *Consolidated net operating loss.* The consolidated net operating loss shall be determined by taking into account the following:

(1) The separate taxable income (as determined under §1.1502–12) of each member of the group, computed without regard to any deduction under section 242;

(2) Any consolidated capital gain net income (net capital gain for taxable years beginning before January 1, 1977);

(3) Any consolidated section 1231 net loss;

(4) Any consolidated charitable contributions deduction;

(5) Any consolidated dividends received deduction (determined under §1.1502–26 without regard to paragraph (a)(2) of that section); and

(6) Any consolidated section 247 deduction (determined under §1.1502–27 without regard to paragraph (a)(1)(ii) of that section).

(g) *Groups that include insolvent financial institutions.* For rules applicable to relinquishing the entire carryback period with respect to losses attributable to insolvent financial institutions, see §301.6402–7 of this chapter.

(h) *Effective date.* Except as provided in §1.1502–21T (d)(1), (d)(2), and (g)(3), this section applies to consolidated return years beginning before January 1, 1997.

[T.D. 6894, 31 FR 11794, Sept. 8, 1966, as amended by T.D. 7728, 45 FR 72650, Nov. 3, 1980; T.D. 8387, 56 FR 67489, Dec. 31, 1991; T.D. 8446, 57 FR 53034, Nov. 6, 1992; T.D. 8677, 61 FR 33323, June 27, 1996. Redesignated and amended by T.D. 8677, 61 FR 33328, June 27, 1996]

§1.1502–22A Consolidated net capital gain or loss generally applicable for consolidated return years beginning before January 1, 1997.

(a) *Computation*—(1) *Consolidated capital gain net income.* The consolidated capital gain net income (net capital gain for taxable years beginning before January 1, 1977) for the taxable year shall be determined by taking into account:

(i) The aggregate of the capital gains and losses (determined without regard to gains or losses to which section 1231 applies or net capital loss carryovers or carrybacks) of the members of the group for the consolidated return year,

(ii) The consolidated section 1231 net gain for such year (computed in accordance with §§1.1502–23A or 1.1502–23T), and

(iii) The consolidated net capital loss carryovers or carrybacks to such year (as determined under paragraph (b) of this section).

(2) *Consolidated net capital loss.* The consolidated net capital loss shall be determined under subparagraph (1) of this paragraph but without regard to subdivision (iii) thereof.

(3) *Special rules.* For purposes of this section, capital gains and losses on intercompany transactions and transactions with respect to stock, bonds, and other obligations of a member of the group shall be reflected as provided in §§1.1502–13, and 1.1502–19, and capital losses shall be limited as provided in §§1.1502–15A and 1.1502-11(c).

(4) [Reserved]

(5) *Example*. The provisions of this paragraph may be illustrated by the following example:

Example. (i) Corporations P, S, and T file consolidated returns on a calendar year basis for 1966 and 1967. The members had the following transactions involving capital assets during 1967: P sold an asset with a $10,000 basis to S for $17,000 and none of the circumstances of restoration described in § 1.1502–13 occurred by the end of the consolidated return year; S sold an asset to individual A for $7,000 which S had purchased during 1966 from P for $10,000, and with respect to which P had deferred a gain of $2,000; T sold an asset with a basis of $10,000 to individual B for $25,000. The group has a consolidated net capital loss carryover to the taxable year of $10,000.

(ii) The consolidated net capital gain of the group is $4,000, determined as follows: P's net capital gain of $2,000, representing the deferred gain on the sale to S during the taxable year 1966, restored into income during taxable year 1967 (the $7,000 gain on P's deferred intercompany transaction is not taken into account for the current year), plus T's net capital gain of $15,000, minus S's net capital loss of $3,000 and the consolidated net capital loss carryover of $10,000.

(b) *Consolidated net capital loss carryovers and carrybacks*—(1) *In general*. The consolidated net capital loss carryovers and carrybacks to the taxable year shall consist of any consolidated net capital losses of the group, plus any net capital losses of members of the group arising in separate return years of such members, which may be carried to the taxable year under the principles of section 1212(a). However, such consolidated carryovers and carrybacks shall not include any consolidated net capital loss apportioned to a corporation for a separate return year pursuant to § 1.1502–79A(b) (or § 1.1502–22T(b), as appropriate) and shall be subject to the limitations contained in paragraphs (c) and (d) of this section. For purposes of section 1212(a)(1), the portion of any consolidated net capital loss for any taxable year attributable to a foreign expropriation capital loss is the amount of the foreign expropriation capital losses of all the members for such year (but not in excess of the consolidated net capital loss for such year).

(2) *Absorption rules*. For purposes of determining the amount, if any, of a net capital loss (whether consolidated or separate) which can be carried to a taxable year (consolidated or separate), the amount of such net capital loss which is absorbed in a prior consolidated return year under section 1212(a)(1) shall be determined by:

(i) Applying all net capital losses which can be carried to such prior year in the order of the taxable years in which such losses were sustained, beginning with the taxable year which ends earliest, and

(ii) Applying all such losses which can be carried to such prior year from taxable years ending on the same date on a prorata basis, except that any portion of a net capital loss attributable to a foreign expropriation capital loss to which section 1212(a)(1)(B) applies shall be applied last.

(c) *Limitation on net capital loss carryovers and carrybacks from separate return limitation years*—(1) *General rule*. In the case of a net capital loss of a member of the group arising in a separate return limitation year (as defined in paragraph (f) of § 1.1502–1) of such member (and in a separate return limitation year of any predecessor of such member), the amount that may be included under paragraph (b) of this section (computed without regard to the limitation contained in paragraph (d) of this section) shall not exceed the amount determined under subparagraph (2) of this paragraph.

(2) *Computation of limitation*. The amount referred to in subparagraph (1) of this paragraph with respect to a member of the group is the excess, if any, of:

(i) The consolidated capital gain net income (net capital gain for taxable years beginning before January 1, 1977) for the taxable year (computed without regard to any net capital loss carryovers and carrybacks), minus such consolidated capital gain net income (net capital gain for taxable years beginning before January 1, 1977) for the taxable year recomputed by excluding the capital gains and losses and the gains and losses to which section 1231 applies of such member, over

(ii) The net capital losses attributable to such member which can be carried to the taxable year arising in taxable years ending prior to the particular separate return limitation year.

(d) *Limitation on capital loss carryovers where there has been a consolidated return change of ownership*—(1) *General rule*. If a consolidated return change of ownership (as defined in paragraph (g) of § 1.1502–1) occurs during the taxable year or an earlier taxable year, the amount which may be included under paragraph (b) of this section in the consolidated net capital loss carryovers to the taxable year with respect to the aggregate of the net capital losses attributable to old members of the group (as defined in paragraph (g)(3) of § 1.1502–1) arising in taxable years (consolidated or separate) ending on the same day and before the taxable year in which the consolidated return change of ownership occurred shall not exceed the amount determined under subparagraph (2) of this paragraph.

(2) *Computation of limitation*. The amount referred to in subparagraph (1) of this paragraph shall be the excess of:

(i) The consolidated capital gain net income (net capital gain for taxable years beginning before January 1, 1977) (determined without regard to any net capital loss carryovers for the taxable year) recomputed by including only capital gains and losses and gains and losses to which section 1231 applies of the old members of the group, over

(ii) The aggregate net capital losses attributable to the old members of the group which may be carried to the taxable year arising in taxable years ending prior to the particular loss year or years.

(3) *Cross-reference*. See § 1.1502–22T(d) for the rule that applies the principles of this paragraph (d) in consolidated return years beginning on or after January 1, 1997, with respect to a consolidated return change of ownership occurring before January 1, 1997.

(e) *Effective date*. This section applies to any consolidated return years to which § 1.1502–21T(g) does not apply. See § 1.1502–21T(g) for effective dates of that section.

[T.D. 6894, 31 FR 11794, Sept. 8, 1966, as amended by T.D. 7728, 45 FR 72650, Nov. 3, 1980; T.D. 8597, 60 FR 36679, July 18, 1995; T.D. 8677, 33323, June 27, 1996. Redesignated and amended by T.D. 8677, 61 FR 33333, June 27, 1996]

§ 1.1502–23A Consolidated net section 1231 gain or loss generally applicable for consolidated return years beginning before January 1, 1997.

(a) The consolidated section 1231 net gain or loss for the taxable year shall be determined by taking into account the aggregate of the gains and losses to which section 1231 applies of the members of the group for the consolidated return year. Section 1231 gains and losses on intercompany transactions shall be reflected as provided in § 1.1502–13. Section 1231 losses that are ''built-in deductions'' shall be subject to the limitations of §§ 1.1502–21A(c) and 1.1502–22A(c), as provided in § 1.1502–15A(a) (or § 1.1502–21T(c) in effect prior to June 25, 1999, as contained in 26 CFR part 1 revised April 1, 1999, and 1.1502–22T(c) in effect prior to June 25, 1999, as contained in 26 CFR part 1 revised April 1, 1999, as provided in 1.1502–15T(a) in effect prior to June 25, 1999, as contained in 26 CFR part 1 revised April 1, 1999) or (1.1502–21(c) and 1.1502–22(c), as provided in 1.1502–15(a), as applicable), as appropriate).

(b) *Effective date*. This section applies to any consolidated return years to which § 1.1502–21(h) or 1.1502–21T(g) in effect prior to June 25, 1999, as contained in 26 CFR part 1 revised April 1, 1999, as applicable does not apply. See § 1.1502–21(h) or 1.1502–21T(g) in effect prior to June 25, 1999, as contained in 26 CFR part 1 revised April 1, 1999, as applicable for effective dates of these sections.

[T.D. 7246, 38 FR 763, Jan. 4, 1973, as amended by T.D. 8677, 33323, June 27, 1996. Redesignated and amended by T.D. 8677, 61 FR 33334, June 27, 1996; T.D. 8823, 64 FR 36099, July 2, 1999]

§ 1.1502–41A Determination of consolidated net long-term capital gain and consolidated net short-term capital loss generally applicable for consolidated return years beginning before January 1, 1997.

(a) *Consolidated net long-term capital gain*. The consolidated net long-term capital gain shall be determined by taking into account (1) those gains and losses to which § 1.1502–22A(a) applies which are treated as long term under section 1222, and (2) the consolidated section 1231 net gain (computed in accordance with § 1.1502–23A).

(b) *Consolidated net short-term capital loss.* The consolidated net short-term capital loss shall be determined by taking into account (1) those gains and losses to which § 1.1502–22A(a) applies which are treated as short term under section 1222, and (2) the consolidated net capital loss carryovers and carrybacks to the taxable year (as determined under § 1.1502–22A(b)).

(c) *Effective date.* This section applies to any consolidated return years to which § 1.1502–21(h) or 1.1502–21T(g) in effect prior to June 25, 1999, as contained in 26 CFR part 1 revised April 1, 1999, as applicable does not apply. See § 1.1502–21(h) or 1.1502–21T(g) in effect prior to June 25, 1999, as contained in 26 CFR part 1 revised April 1, 1999, as applicable for effective dates of these sections.

[T.D, 6894, 31 FR 11794, Sept. 8, 1966, as amended by T.D. 8677, 61 FR 33323, June 27, 1996. Redesignated and amended by T.D. 8677, 61 FR 33334, June 27, 1996; T.D. 8823, 64 FR 36099, 36100, July 2, 1999]

§ 1.1502–79A Separate return years generally applicable for consolidated return years beginning before January 1, 1997.

(a) *Carryover and carryback of consolidated net operating losses to separate return years*—(1) *In general.* (i) If a consolidated net operating loss can be carried under the principles of section 172(b) and paragraph (b) of § 1.1502–21A to a separate return year of a corporation (or could have been so carried if such corporation were in existence) which was a member in the year in which such loss arose, then the portion of such consolidated net operating loss attributable to such corporation (as determined under subparagraph (3) of this paragraph) shall be apportioned to such corporation (and any successor to such corporation in a transaction to which section 381(a) applies) and shall be a net operating loss carryover or carryback to such separate return year; accordingly, such portion shall not be included in the consolidated net operating loss carryovers or carrybacks to the equivalent consolidated return year. Thus, for example, if a member filed a separate return for the third year preceding a consolidated return year in which a consolidated net operating loss was sustained and if any portion of such loss is apportioned to such member for such separate return year, such portion may not be carried back by the group to its third year preceding such consolidated return year.

(ii) If a corporation ceases to be a member during a consolidated return year, any consolidated net operating loss carryover from a prior taxable year must first be carried to such consolidated return year, notwithstanding that all or a portion of the consolidated net operating loss giving rise to the carryover is attributable to the corporation which ceases to be a member. To the extent not absorbed in such consolidated return year, the portion of the consolidated net operating loss attributable to the corporation ceasing to be a member shall then be carried to such corporation's first separate return year.

(iii) For rules permitting the reattribution of losses of a subsidiary to the common parent in the case of loss disallowance or basis reduction on the disposition or deconsolidation of stock of the subsidiary, see § 1.1502–20.

(2) *Nonapportionment to certain members not in existence.* Notwithstanding subparagraph (1) of this paragraph, the portion of a consolidated net operating loss attributable to a member shall not be apportioned to a prior separate return year for which such member was not in existence and shall be included in the consolidated net operating loss carrybacks to the equivalent consolidated return year of the group (or, if such equivalent year is a separate return year, then to such separate return year), provided that such member was a member of the group immediately after its organization.

(3) *Portion of consolidated net operating loss attributable to a member.* The portion of a consolidated net operating loss attributable to a member of a group is an amount equal to the consolidated net operating loss multiplied by a fraction, the numerator of which is the separate net operating loss of such corporation, and the denominator of which is the sum of the separate net operating losses of all members of the group in such year having such losses. For purposes of this subparagraph, the

separate net operating loss of a member of the group shall be determined under § 1.1502–12 (except that no deduction shall be allowed under section 242), adjusted for the following items taken into account in the computation of the consolidated net operating loss:

(i) The portion of the consolidated dividends received deduction, the consolidated charitable contributions deductions, and the consolidated section 247 deduction, attributable to such member;

(ii) Such member's capital gain net income (net capital gain for taxable years beginning before January 1, 1977) (determined without regard to any net capital loss carryover attributable to such member);

(iii) Such member's net capital loss and section 1231 net loss, reduced by the portion of the consolidated net capital loss attributable to such member (as determined under paragraph (b)(2) of this section); and

(iv) The portion of any consolidated net capital loss carryover attributable to such member which is absorbed in the taxable year.

(4) *Examples*. The provisions of this paragraph may be illustrated by the following examples:

Example (1). (i) Corporation P was formed on January 1, 1966. P filed a separate return for the calendar year 1966. On March 15, 1967, P formed corporation S. P and S filed a consolidated return for 1967. On January 1, 1968, P purchased all the stock of corporation T, which had been formed in 1967 and had filed a separate return for its taxable year ending December 31, 1967.

(ii) P, S, and T join in the filing of a consolidated return for 1968, which return reflects a consolidated net operating loss of $11,000. $2,000 of such consolidated net operating loss is attributable to P, $3,000 to S, and $6,000 to T. Such apportionment of the consolidated net operating loss was made on the basis of the separate net operating losses of each member as determined under subparagraph (3) of this paragraph.

(iii) $5,000 of the 1968 consolidated net operating loss can be carried back to P's separate return for 1966. Such amount is the portion of the consolidated net operating loss attributable to P and S. Even though S was not in existence in 1966, the portion attributable to S can be carried back to P's separate return year, since S (unlike T) was a member of the group immediately after its organization. The 1968 consolidated net operating loss can be carried back against the group's income in 1967 except to the extent (i.e., $6,000) that it is apportioned to T for its 1967 separate return year and to the extent that it was absorbed in P's 1966 separate return year. The portion of the 1968 consolidated net operating loss attributable to T ($6,000) is a net operating loss carryback to its 1967 separate return.

Example (2). (i) Assume the same facts as in example (1). Assume further that on June 15, 1969, P sells all the stock of T to an outsider, that P and S file a consolidated return for 1969 (which includes the income of T for the period January 1 through June 15), and that T files a separate return for the period June 16 through December 31, 1969.

(ii) The 1968 consolidated net operating loss, to the extent not absorbed in prior years, must first be carried to the consolidated return year 1969. Any portion of the $6,000 amount attributable to T which is not absorbed in T's 1967 separate return year or in the 1969 consolidated return year shall then be carried to T's separate return year ending December 31, 1969.

(b) *Carryover and carryback of consolidated net capital loss to separate return years*—(1) *In general*. If a consolidated net capital loss can be carried under the principles of section 1212(a) and paragraph (b) of § 1.1502–22A to a separate return year of a corporation (or could have been so carried if such corporation were in existence) which was a member of the group in the year in which such consolidated net capital loss arose, then the portion of such consolidated net capital loss attributable to such corporation (as determined under subparagraph (2) of this paragraph) shall be apportioned to such corporation (and any successor to such corporation in a transaction to which section 381(a) applies) under the principles of paragraph (a) (1), (2) and (3) of this section and shall be a net capital loss carryback or carryover to such separate return year.

(2) *Portion of consolidated net capital loss attributable to a member*. The portion of a consolidated net capital loss attributable to a member of a group is an amount equal to such consolidated net capital loss multiplied by a fraction, the numerator of which is the net capital loss of such member, and the denominator of which is the sum of the net capital losses of those members of the group having net capital losses. For purposes of this subparagraph, the net capital loss of a member of the

group shall be determined by taking into account the following:

(i) Such member's capital gain net income (net capital gain for taxable years beginning before January 1, 1977) or loss (determined without regard to any net capital loss carryover or carryback); and

(ii) Such member's section 1231 net loss, reduced by the portion of the consolidated section 1231 net loss attributable to such member.

(c) through (e) [Reserved]

(f) *Effective date.* Paragraphs (a) and (b) of this section apply to losses arising in consolidated return years to which § 1.1502–21T(g) does not apply. For this purpose net operating loss deductions, carryovers, and carrybacks arise in the year from which they are carried. See § 1.1502–21T(g) for effective dates of that section.

[T.D. 8677, 61 FR 33334, June 27, 1996]

REGULATIONS APPLYING SECTION 382 WITH RESPECT TO TESTING DATES (AND CORPORATIONS JOINING OR LEAVING CONSOLIDATED GROUPS) BEFORE JUNE 25, 1999

§ 1.1502–90A Table of contents.

The following list contains the major headings in §§ 1.1502–91A through 1.1502–99A:

§ 1.1502–91A Application of Section 382 With Respect to a Consolidated Group Generally Applicable for Testing Dates Before June 25, 1999.

(a) Determination and effect of an ownership change.
(1) In general.
(2) Special rule for post-change year that includes the change date.
(3) Cross reference.
(b) Definitions and nomenclature.
(c) Loss group.
(1) Defined.
(2) Coordination with rule that ends separate tracking.
(3) Example.
(d) Loss subgroup.
(1) Net operating loss carryovers.
(2) Net unrealized built-in loss.
(3) Loss subgroup parent.
(4) Principal purpose of avoiding a limitation.
(5) Special rules.
(6) Examples.
(e) Pre-change consolidated attribute.
(1) Defined.
(2) Example.
(f) Pre-change subgroup attribute.
(1) Defined.
(2) Example.
(g) Net unrealized built-in gain and loss.
(1) In general.
(2) Members included.
(i) Consolidated group.
(ii) Loss subgroup.
(3) Acquisitions of built-in gain or loss assets.
(4) Indirect ownership.
(h) Recognized built-in gain or loss.
(1) In general. [Reserved]
(2) Disposition of stock or an intercompany obligation of a member.
(3) Deferred gain or loss.
(4) Exchanged basis property.
(i) [Reserved]
(j) Predecessor and successor corporations.

§ 1.1502–92A Ownership change of a loss group or a loss subgroup generally applicable for testing dates before June 25, 1999.

(a) Scope.
(b) Determination of an ownership change.
(1) Parent change method.
(i) Loss group.
(ii) Loss subgroup.
(2) Examples.
(3) Special adjustments.
(i) Common parent succeeded by a new common parent.
(ii) Newly created loss subgroup parent.
(iii) Examples.
(4) End of separate tracking of certain losses.
(c) Supplemental rules for determining ownership change.
(1) Scope.
(2) Cause for applying supplemental rule.
(3) Operating rules.
(4) Supplemental ownership change rules.
(i) Additional testing dates for the common parent (or loss subgroup parent).
(ii) Treatment of subsidiary stock as stock of the common parent (or loss subgroup parent).
(iii) 5-percent shareholder of the common parent (or loss subgroup parent).
(5) Examples.
(d) Testing period following ownership change under this section.
(e) Information statements.
(1) Common parent of a loss group.
(2) Abbreviated statement with respect to loss subgroups.

§ 1.1502–93A Consolidated section 382 limitation (or subgroup section 382 limitation) generally applicable for testing dates before June 25, 1999.

(a) Determination of the consolidated section 382 limitation (or subgroup section 382 limitation).
(1) In general.
(2) Coordination with apportionment rule.
(b) Value of the loss group (or loss subgroup).
(1) Stock value immediately before ownership change.
(2) Adjustment to value.

(3) Examples.
(c) Recognized built-in gain of a loss group or loss subgroup.
(d) Continuity of business.
(1) In general.
(2) Example.
(e) Limitations of losses under other rules.

§ 1.1502–94A Coordination with section 382 and the regulations thereunder when a corporation becomes a member of a consolidated group generally applicable for corporations becoming members of a group before June 25, 1999.

(a) Scope.
(1) In general.
(2) Successor corporation as new loss member.
(3) Coordination in the case of a loss subgroup.
(4) End of separate tracking of certain losses.
(5) Cross-reference.
(b) Application of section 382 to a new loss member.
(1) In general.
(2) Adjustment to value.
(3) Pre-change separate attribute defined.
(4) Examples.
(c) Built-in gains and losses.
(d) Information statements.

§ 1.1502–95A Rules on ceasing to be a member of a consolidated group (or loss subgroup) generally applicable for corporations ceasing to be members before June 25, 1999.

(a) In general.
(1) Consolidated group.
(2) Election by common parent.
(3) Coordination with §§ 1.1502–91T through 1.1502–93T.
(b) Separate application of section 382 when a member leaves a consolidated group.
(1) In general.
(2) Effect of a prior ownership change of the group.
(3) Application in the case of a loss subgroup.
(4) Examples.
(c) Apportionment of a consolidated section 382 limitation.
(1) In general.
(2) Amount of apportionment.
(3) Effect of apportionment on the consolidated section 382 limitation.
(4) Effect on corporations to which the consolidated section 382 limitation is apportioned.
(5) Deemed apportionment when loss group terminates.
(6) Appropriate adjustments when former member leaves during the year.
(7) Examples.
(d) Rules pertaining to ceasing to be a member of a loss subgroup.
(1) In general.
(2) Examples.
(e) Filing the election to apportion.
(1) Form of the election to apportion.
(2) Signing of the election.
(3) Filing of the election.
(4) Revocation of election.

§ 1.1502–96A Miscellaneous rules generally applicable for testing dates before June 25, 1999.

(a) End of separate tracking of losses.
(1) Application.
(2) Effect of end of separate tracking.
(3) Continuing effect of end of separate tracking.
(4) Special rule for testing period.
(5) Limits on effects of end of separate tracking.
(b) Ownership change of subsidiary.
(1) Ownership change of a subsidiary because of options or plan or arrangement.
(2) Effect of the ownership change.
(i) In general.
(ii) Pre-change losses.
(3) Coordination with §§ 1.1502–91T, 1.1502–92T, and 1.1502–94T.
(4) Example.
(c) Continuing effect of an ownership change.

§ 1.1502–97A Special rules under section 382 for members under the jurisdiction of a court in a title 11 or similar case. [Reserved]

§ 1.1502–98A Coordination with section 383 generally applicable for testing dates (or members joining or leaving a group) before June 25, 1999.

§ 1.1502–99A Effective dates.

(a) Effective date.
(1) In general.
(2) Anti–duplication rules for recognized built–in gain.
(b) Testing period may include a period beginning before January 1, 1997.
(c) Transition rules.
(1) Methods permitted.
(i) In general.
(ii) Adjustments to offset excess limitation.
(iii) Coordination with effective date.
(2) Permitted methods.
(d) Amended returns.
(e) Section 383.

[T.D. 8678, 61 FR 33336, June 27, 1996. Redesignated and amended by T.D. 8824, 64 FR 36127, July 2, 1999]

§ 1.1502–91A Application of section 382 with respect to a consolidated group generally applicable for testing dates before June 25, 1999.

(a) *Determination and effect of an ownership change*—(1) *In general.* This section and §§ 1.1502–92A and 1.1502–93A set forth the rules for determining an ownership change under section 382 for members of consolidated groups and the section 382 limitations with respect to attributes described in paragraphs (e) and (f) of this section. These rules generally provide that an ownership change and the section 382 limitation are determined with respect to these

attributes for the group (or loss subgroup) on a single entity basis and not for its members separately. Following an ownership change of a loss group (or a loss subgroup) under § 1.1502–92A, the amount of consolidated taxable income for any post-change year which may be offset by pre-change consolidated attributes (or pre-change subgroup attributes) shall not exceed the consolidated section 382 limitation (or subgroup section 382 limitation) for such year as determined under § 1.1502–93A.

(2) *Special rule for post-change year that includes the change date.* If the post-change year includes the change date, section 382(b)(3)(A) is applied so that the consolidated section 382 limitation (or subgroup section 382 limitation) does not apply to the portion of consolidated taxable income that is allocable to the period in the year on or before the change date. See generally § 1.382–6 (relating to the allocation of income and loss). The allocation of consolidated taxable income for the post-change year that includes the change date must be made before taking into account any consolidated net operating loss deduction (as defined in § 1.1502–21(a) or 1.1502–21T(a) in effect prior to June 25, 1999, as contained in 26 CFR part 1 revised April 1, 1999, as applicable).

(3) *Cross reference.* See §§ 1.1502–94A and 1.1502–95A for rules that apply section 382 to a corporation that becomes or ceases to be a member of a group or loss subgroup.

(b) *Definitions and nomenclature.* For purposes of this section and §§ 1.1502–92A through 1.1502–99A, unless otherwise stated:

(1) The definitions and nomenclature contained in section 382 and the regulations thereunder (including the nomenclature and assumptions relating to the examples in § 1.382–2T(b)) and this section and §§ 1.1502–92A through 1.1502–99A apply; and

(2) In all examples, all groups file consolidated returns, all corporations file their income tax returns on a calendar year basis, the only 5-percent shareholder of a corporation is a public group, the facts set forth the only owner shifts during the testing period, and each asset of a corporation has a value equal to its adjusted basis.

(c) *Loss group*—(1) *Defined.* A loss group is a consolidated group that:

(i) Is entitled to use a net operating loss carryover to the taxable year that did not arise (and is not treated under § 1.1502–21T(c) as arising) in a SRLY;

(ii) Has a consolidated net operating loss for the taxable year in which a testing date of the common parent occurs (determined by treating the common parent as a loss corporation); or

(iii) Has a net unrealized built-in loss (determined under paragraph (g) of this section by treating the date on which the determination is made as though it were a change date).

(2) *Coordination with rule that ends separate tracking.* A consolidated group may be a loss group because a member's losses that arose in (or are treated as arising in) a SRLY are treated as described in paragraph (c)(1)(i) of this section. See § 1.1502–96A(a).

(3) *Example.* The following example illustrates the principles of this paragraph (c).

Example. Loss group. (a) L and L1 file separate returns and each has a net operating loss carryover arising in Year 1 that is carried over to Year 2. A owns 40 shares and L owns 60 shares of the 100 outstanding shares of L1 stock. At the close of Year 1, L buys the 40 shares of L1 stock from A. For Year 2, L and L1 file a consolidated return. The following is a graphic illustration of these facts:

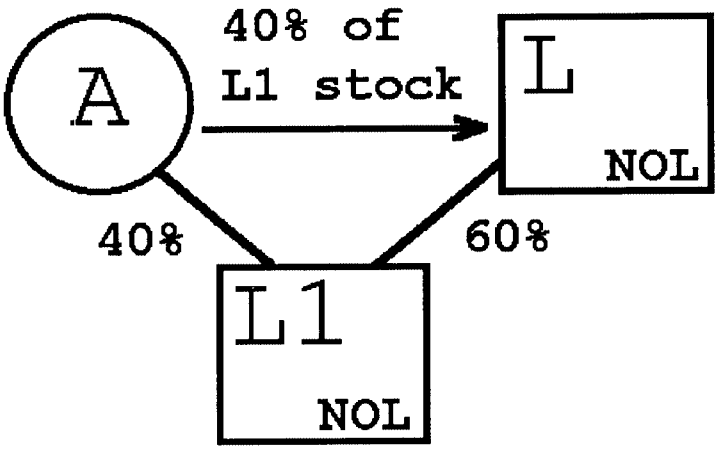

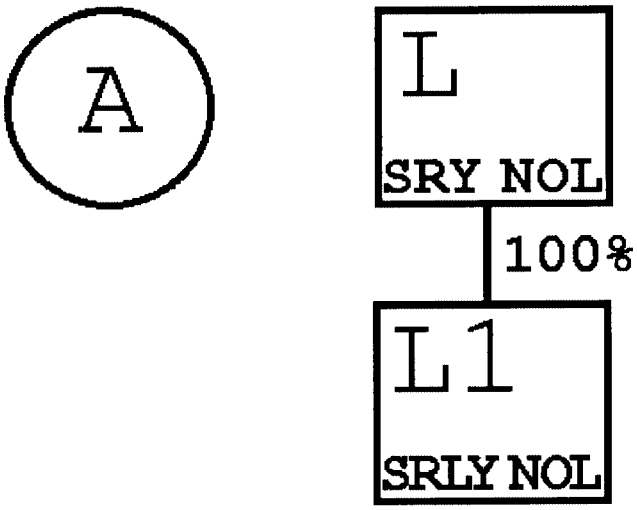

(b) L and L1 become a loss group at the beginning of Year 2 because the group is entitled to use the Year 1 net operating loss carryover of L, the common parent, which did not arise (and is not treated under §1.1502–21(c) or 1.1502–21T(c) in effect prior to June 25, 1999, as contained in 26 CFR part 1 revised April 1, 1999, as applicable as arising) in a SRLY. See §1.1502–94A for rules relating to the application of section 382 with respect to L1's net operating loss carryover from Year 1 which did arise in a SRLY.

(d) *Loss subgroup*—(1) *Net operating loss carryovers.* Two or more corporations that become members of a consolidated group (the current group) compose a loss subgroup if:

(i) They were affiliated with each other in another group (the former group), whether or not the group was a consolidated group;

(ii) They bear the relationship described in section 1504(a)(1) to each other through a loss subgroup parent immediately after they become members of the current group; and

(iii) At least one of the members carries over a net operating loss that did not arise (and is not treated under § 1.1502–21(c) or 1.1502–21T(c) in effect prior to June 25, 1999, as contained in 26 CFR part 1 revised April 1, 1999, as applicable as arising) in a SRLY with respect to the former group.

(2) *Net unrealized built-in loss.* Two or more corporations that become members of a consolidated group compose a loss subgroup if they:

(i) Have been continuously affiliated with each other for the 5 consecutive year period ending immediately before they become members of the group;

(ii) Bear the relationship described in section 1504(a)(1) to each other through a loss subgroup parent immediately after they become members of the current group; and

(iii) Have a net unrealized built-in loss (determined under paragraph (g) of this section on the day they become members of the group by treating that day as though it were a change date).

(3) *Loss subgroup parent.* A loss subgroup parent is the corporation that bears the same relationship to the other members of the loss subgroup as a common parent bears to the members of a group.

(4) *Principal purpose of avoiding a limitation.* The corporations described in paragraph (d)(1) or (2) of this section do not compose a loss subgroup if any one of them is formed, acquired, or availed of with a principal purpose of avoiding the application of, or increasing any limitation under, section 382. Instead, § 1.1502–94A applies with respect to the attributes of each such corporation. This paragraph (d)(4) does not apply solely because, in connection with becoming members of the group, the members of a group (or loss subgroup) are rearranged to bear a relationship to the other members described in section 1504(a)(1).

(5) *Special rules.* See § 1.1502–95A(d) for rules concerning when a corporation ceases to be a member of a loss subgroup. See also § 1.1502–96A(a) for a special rule regarding the end of separate tracking of SRLY losses of a member that has an ownership change or that has been a member of a group for at least 5 consecutive years.

(6) *Examples.* The following examples illustrate the principles of this paragraph (d).

Example 1. Loss subgroup. (a) P owns all the L stock and L owns all the L1 stock. The P group has a consolidated net operating loss arising in Year 1 that is carried to Year 2. On May 2, Year 2, P sells all the stock of L to A, and L and L1 thereafter file consolidated returns. A portion of the Year 1 consolidated net operating loss is apportioned under § 1.1502–21(b) or 1.1502–21T(b) in effect prior to June 25, 1999, as contained in 26 CFR part 1 revised April 1, 1999, as applicable to each of L and L1, which they carry over to Year 2. The following is a graphic illustration of these facts:

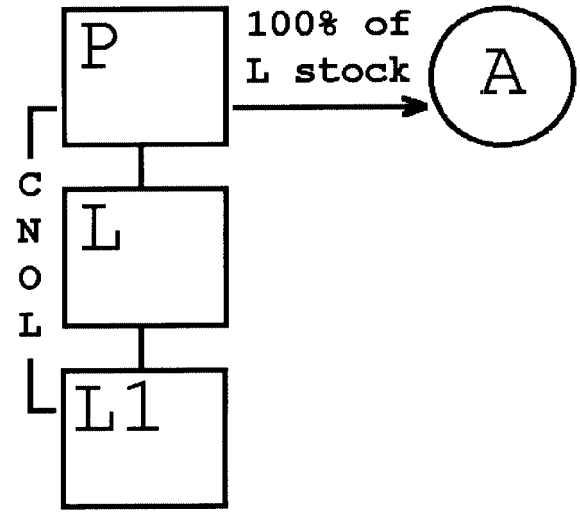

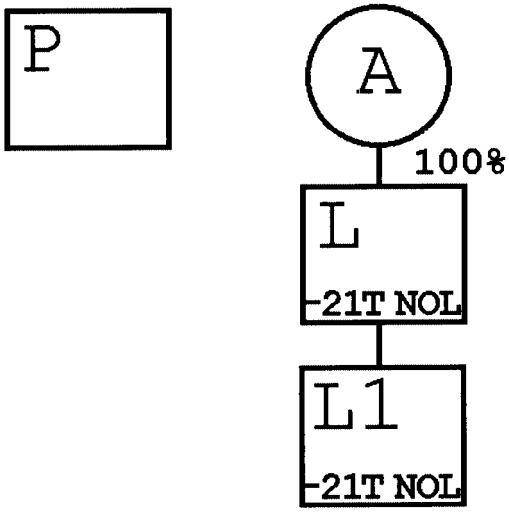

(b) (1) L and L1 compose a loss subgroup within the meaning of paragraph (d)(1) of this section because—

(i) They were affiliated with each other in the P group (the former group);

(ii) They bear a relationship described in section 1504(a)(1) to each other through a loss subgroup parent (L) immediately after they became members of the L group; and

(iii) At least one of the members (here, both L and L1) carries over a net operating loss to the L group (the current group) that did not arise in a SRLY with respect to the P group.

(2) Under paragraph (d)(3) of this section, L is the loss subgroup parent of the L loss subgroup.

Example 2. Loss subgroup—section 1504(a)(1) relationship. (a) P owns all the stock of L and

L1. L owns all the stock of L2. L1 and L2 own 40 percent and 60 percent of the stock of L3, respectively. The P group has a consolidated net operating loss arising in Year 1 that is carried over to Year 2. On May 22, Year 2, P sells all the stock of L and L1 to P1, the common parent of another consolidated group. The Year 1 consolidated net operating loss is apportioned under §1.1502–21(b) or 1.1502–21T(b) in effect prior to June 25, 1999, as contained in 26 CFR part 1 revised April 1, 1999, as applicable, and each of L, L1, L2, and L3 carries over a portion of such loss to the first consolidated return year of the P1 group ending after the acquisition. The following is a graphic illustration of these facts:

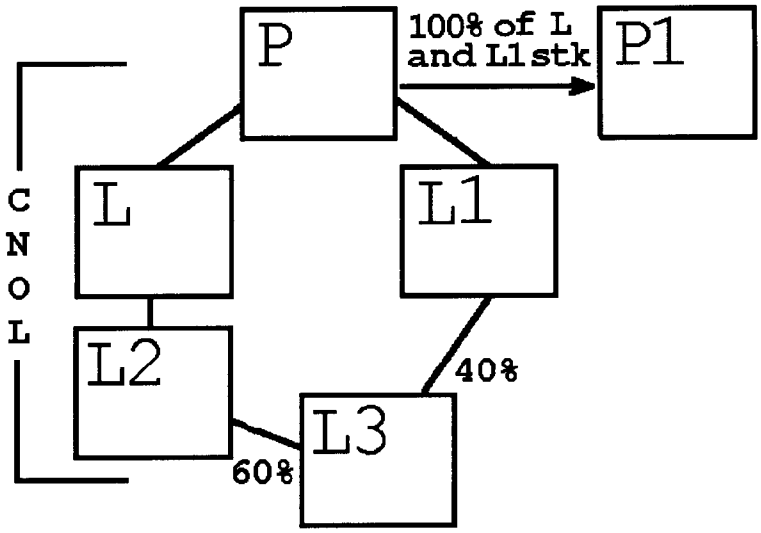

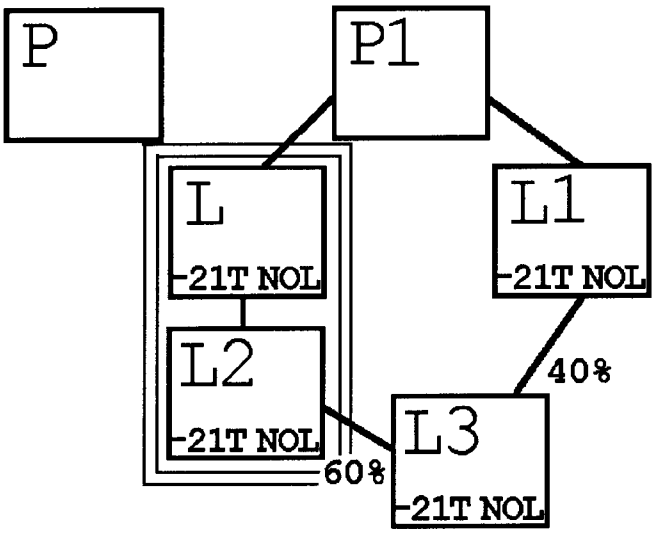

(b) L and L2 compose a loss subgroup within the meaning of paragraph (d)(1) of this section. Neither L1 nor L3 is included in a loss subgroup because neither bears a relationship described in section 1504(a)(1) through a loss subgroup parent to any other member of the former group immediately after becoming members of the P1 group.

Example 3. Loss subgroup—section 1504(a)(1) relationship. The facts are the same as in *Example 2,* except that the stock of L1 is transferred to L in connection with the sale of the

L stock to P1. L, L1, L2, and L3 compose a loss subgroup within the meaning of paragraph (d)(1) of this section because—

(1) They were affiliated with each other in the P group (the former group);

(2) They bear a relationship described in section 1504(a)(1) to each other through a loss subgroup parent (L) immediately after they become members of the P1 group; and

(3) At least one of the members (here, each of L, L1, L2, and L3) carries over to the P1 group (the current group) a net operating loss that did not arise in a SRLY with respect to the P group (the former group).

(e) *Pre-change consolidated attribute*—(1) *Defined*. A pre-change consolidated attribute of a loss group is—

(i) Any loss described in paragraph (c)(1) (i) or (ii) of this section (relating to the definition of loss group) that is allocable to the period ending on or before the change date; and

(ii) Any recognized built-in loss of the loss group.

(2) *Example*. The following example illustrates the principle of this paragraph (e).

Example. Pre-change consolidated attribute. (a) The L group has a consolidated net operating loss arising in Year 1 that is carried over to Year 2. The L loss group has an ownership change at the beginning of Year 2.

(b) The net operating loss carryover of the L loss group from Year 1 is a pre-change consolidated attribute because the L group was entitled to use the loss in Year 2, the loss did not arise in a SRLY with respect to the L group, and therefore the loss was described in paragraph (c)(1)(i) of this section. Under paragraph (a) of this section, the amount of consolidated taxable income of the L group for Year 2 that may be offset by this loss carryover may not exceed the consolidated section 382 limitation of the L group for that year. See §1.1502–93A for rules relating to the computation of the consolidated section 382 limitation.

(f) *Pre-change subgroup attribute*—(1) *Defined*. A pre-change subgroup attribute of a loss subgroup is—

(i) Any net operating loss carryover described in paragraph (d)(1)(iii) of this section (relating to the definition of loss subgroup); and

(ii) Any recognized built-in loss of the loss subgroup.

(2) *Example*. The following example illustrates the principle of this paragraph (f).

Example. Pre-change subgroup attribute. (a) P is the common parent of a consolidated group. P owns all the stock of L, and L owns all the stock of L1. L2 is not a member of an affiliated group, and has a net operating loss arising in Year 1 that is carried over to Year 2. On December 11, Year 2, L1 acquires all the stock of L2, causing an ownership change of L2. During Year 2, the P group has a consolidated net operating loss that is carried over to Year 3. On November 2, Year 3, M acquires all the L stock from P. M, L, L1, and L2 thereafter file consolidated returns. All of the P group Year 2 consolidated net operating loss is apportioned under §1.1502–21(b) or 1.1502–21T(b) in effect prior to June 25, 1999, as contained in 26 CFR part 1 revised April 1, 1999, as applicable to L and L2, which they carry over to the M group.

(b)(1) L, L1, and L2 compose a loss subgroup because—

(i) They were affiliated with each other in the P group (the former group);

(ii) They bore a relationship described in section 1504(a)(1) to each other through a loss subgroup parent (L) immediately after they became members of the L group; and

(iii) At least one of the members (here, both L and L2) carries over a net operating loss to the M group (the current group) that is described in paragraph (d)(1)(iii) of this section.

(2) For this purpose, L2's loss from Year 1 that was a SRLY loss with respect to the P group (the former group) is treated as described in paragraph (d)(1)(iii) of this section because of the application of the principles of §1.1502–96A(a). See paragraph (d)(5) of this section. M's acquisition results in an ownership change of L, and therefore the L loss subgroup under §1.1502–92A(a)(2). See §1.1502–93A for rules governing the computation of the subgroup section 382 limitation.

(c) In the M group, L2's Year 1 loss continues to be subject to a section 382 limitation resulting from the ownership change that occurred on December 11, Year 2. See §1.1502–96A(c).

(g) *Net unrealized built-in gain and loss*—(1) *In general*. The determination whether a consolidated group (or loss subgroup) has a net unrealized built-in gain or loss under section 382(h)(3) is based on the aggregate amount of the separately computed net unrealized built-in gains or losses of each member that is included in the group (or loss subgroup) under paragraph (g)(2) of this section, including items of built-in income and deduction described in section 382(h)(6). Thus, for example, amounts deferred under section 267, or under §1.1502–13 (other than amounts deferred with respect to the stock of a

member (or an intercompany obligation) included in the group (or loss subgroup) under paragraph (g)(2) of this section) are built-in items. The threshold requirement under section 382(h)(3)(B) applies on an aggregate basis and not on a member-by-member basis. The separately computed amount of a member included in a group or loss subgroup does not include any unrealized built-in gain or loss on stock (including stock described in section 1504(a)(4) and §1.382–2T(f)(18)(ii) and (iii)) of another member included in the group or loss subgroup (or on an intercompany obligation). However, a member of a group or loss subgroup includes in its separately computed amount the unrealized built-in gain or loss on stock of another member (or on an intercompany obligation) not included in the group or loss subgroup. If a member is not included in a group (or loss subgroup) under paragraph (g)(2) of this section, the determination of whether the member has a net unrealized built-in gain or loss under section 382(h)(3) is made on a separate entity basis. See §1.1502–94A(c) (relating to built-in gain or loss of a new loss member) and §1.1502–96A(a) (relating to the end of separate tracking of certain losses).

(2) *Members included*—(i) *Consolidated group*. The members included in the determination whether a consolidated group has a net unrealized built-in gain or loss are all members of the group on the day that the determination is made other than—

(A) A new loss member with a net unrealized built-in loss described in §1.1502–94A(a)(1)(ii); and

(B) Members included in a loss subgroup described in §1.1502–91A(d)(2).

(ii) *Loss subgroup*. The members included in the determination whether a loss subgroup has a net unrealized built-in gain or loss are those members described in paragraphs (d)(2)(i) and (ii) of this section.

(3) *Acquisitions of built-in gain or loss assets*. A member of a consolidated group (or loss subgroup) may not, in determining its separately computed net unrealized built-in gain or loss, include any gain or loss with respect to assets acquired with a principal purpose to affect the amount of its net unrealized built-in gain or loss. A group (or loss subgroup) may not, in determining its net unrealized built-in gain or loss, include any gain or loss of a member acquired with a principal purpose to affect the amount of its net unrealized built-in gain or loss.

(4) *Indirect ownership*. A member's separately computed net unrealized built-in gain or loss is adjusted to the extent necessary to prevent any duplication of unrealized gain or loss attributable to the member's indirect ownership interest in another member through a nonmember if the member has a 5-percent or greater ownership interest in the nonmember.

(h) *Recognized built-in gain or loss*—(1) *In general*. [Reserved]

(2) *Disposition of stock or an intercompany obligation of a member*. Gain or loss recognized by a member on the disposition of stock (including stock described in section 1504(a)(4) and §1.382–2T(f)(18)(ii) and (iii)) of another member or an intercompany obligation disposed of before June 25, 1999 is treated as a recognized built-in gain or loss under section 382(h)(2) (unless disallowed under §1.1502–20 or otherwise), even though gain or loss on such stock or obligation was not included in the determination of a net unrealized built-in gain or loss under paragraph (g)(1) of this section.

(3) *Deferred gain or loss*. Gain or loss that is deferred under provisions such as section 267 and §1.1502–13 is treated as recognized built-in gain or loss only to the extent taken into account by the group during the recognition period.

(4) *Exchanged basis property*. If the adjusted basis of any asset is determined, directly or indirectly, in whole or in part, by reference to the adjusted basis of another asset held by the member at the beginning of the recognition period, the asset is treated, with appropriate adjustments, as held by the member at the beginning of the recognition period.

(i) [Reserved]

(j) Predecessor and successor corporations. A reference in this section and §§1.1502–92A through 1.1502–99A to a corporation, member, common parent, loss subgroup parent, or subsidiary includes, as the context may require, a

reference to a predecessor or successor corporation. For example, the determination whether a successor satisfies the continuous affiliation requirement of paragraph (d)(2)(i) of this section is made by reference to its predecessor.

[T.D. 8678, 61 FR 33337, June 27, 1996, as amended by T.D. 8823, 64 FR 36100, July 2, 1999. Redesignated and amended by T.D. 8824, 64 FR 36125, 36127, July 2, 1999]

§ 1.1502–92A Ownership change of a loss group or a loss subgroup generally applicable for testing dates before June 25, 1999.

(a) *Scope*. This section provides rules for determining if there is an ownership change for purposes of section 382 with respect to a loss group or a loss subgroup. See § 1.1502–94A for special rules for determining if there is an ownership change with respect to a new loss member and § 1.1502–96A(b) for special rules for determining if there is an ownership change of a subsidiary.

(b) *Determination of an ownership change*—(1) *Parent change method*—(i) *Loss group*. A loss group has an ownership change if the loss group's common parent has an ownership change under section 382 and the regulations thereunder. Solely for purposes of determining whether the common parent has an ownership change—

(A) The losses described in § 1.1502–91A(c) are treated as net operating losses (or a net unrealized built-in loss) of the common parent; and

(B) The common parent determines the earliest day that its testing period can begin by reference to only the attributes that make the group a loss group under § 1.1502–91A(c).

(ii) *Loss subgroup*. A loss subgroup has an ownership change if the loss subgroup parent has an ownership change under section 382 and the regulations thereunder. The principles of § 1.1502–95A(b) (relating to ceasing to be a member of a consolidated group) apply in determining whether the loss subgroup parent has an ownership change. Solely for purposes of determining whether the loss subgroup parent has an ownership change—

(A) The losses described in § 1.1502–91A(d) are treated as net operating losses (or a net unrealized built-in loss) of the loss subgroup parent;

(B) The day that the members of the loss subgroup become members of the group (or a loss subgroup) is treated as a testing date within the meaning of § 1.382–2(a)(4); and

(C) The loss subgroup parent determines the earliest day that its testing period can begin under § 1.382–2T(d)(3) by reference to only the attributes that make the members a loss subgroup under § 1.1502–91A(d).

(2) *Examples*. The following examples illustrate the principles of this paragraph (b).

Example 1. Loss group—ownership change of the common parent. (a) A owns all the L stock. L owns 80 percent and B owns 20 percent of the L1 stock. For Year 1, the L group has a consolidated net operating loss that resulted from the operations of L1 and that is carried over to Year 2. The value of the L stock is $1000. The total value of the L1 stock is $600 and the value of the L1 stock held by B is $120. The L group is a loss group under § 1.1502–91A(c)(1) because it is entitled to use its net operating loss carryover from Year 1. On August 15, Year 2, A sells 51 percent of the L stock to C. The following is a graphic illustration of these facts:

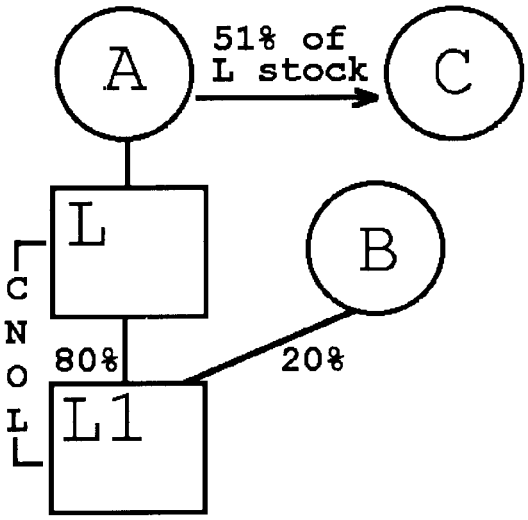

(b) Under paragraph (b)(1)(i) of this section, section 382 and the regulations thereunder are applied to L to determine whether it (and therefore the L loss group) has an ownership change with respect to its net operating loss carryover from Year 1 attributable to L1 on August 15, Year 2. The sale of the L stock to C causes an ownership change of L under §1.382–2T and of the L loss group under paragraph (b)(1)(i) of this section. The amount of consolidated taxable income of the L loss group for any post-change taxable year that may be offset by its pre-change consolidated attributes (that is, the net operating loss carryover from Year 1 attributable to L1) may not exceed the consolidated section 382 limitation for the L loss group for the taxable year.

Example 2. Loss group—owner shifts of subsidiaries disregarded. (a) The facts are the same as in *Example 1*, except that on August 15, Year 2, A sells only 49 percent of the L stock to C and, on December 12, Year 3, in an unrelated transaction, B sells the 20 percent of the L1 stock to D. A's sale of the L stock to C does not cause an ownership change of L under §1.382–2T nor of the L loss group under paragraph (b)(1)(i) of this section. The following is a graphic illustration of these facts:

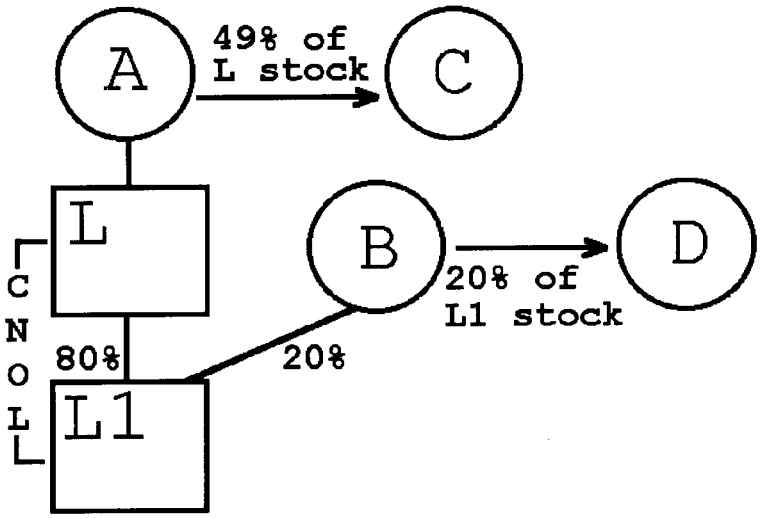

(b) B's subsequent sale of L1 stock is not taken into account for purposes of determining whether the L loss group has an ownership change under paragraph (b)(1)(i) of this section, and, accordingly, there is no ownership change of the L loss group. See paragraph (c) of this section, however, for a supplemental ownership change method that would apply to cause an ownership change if the purchases by C and D were pursuant to a plan or arrangement.

Example 3. Loss subgroup—ownership change of loss subgroup parent controls. (a) P owns all the L stock. L owns 80 percent and A owns 20 percent of the L1 stock. The P group has a consolidated net operating loss arising in Year 1 that is carried over to Year 2. On September 9, Year 2, P sells 51 percent of the L stock to B, and L1 is apportioned a portion of the Year 1 consolidated net operating loss under §1.1502–21(b) or 1.1502–21T(b) in effect prior to June 25, 1999, as contained in 26 CFR part 1 revised April 1, 1999, as applicable, which it carries over to its next taxable year. L and L1 file a consolidated return for their first taxable year ending after the sale to B. The following is a graphic illustration of these facts:

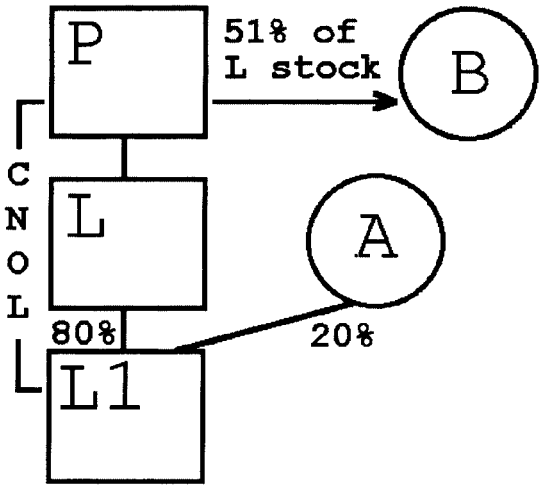

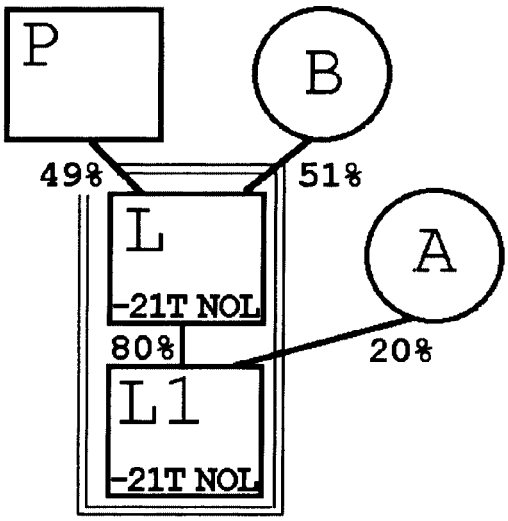

(b) Under §1.1502–91A(d)(1), L and L1 compose a loss subgroup on September 9, Year 2, the day that they become members of the L group. Under paragraph (b)(1)(ii) of this section, section 382 and the regulations thereunder are applied to L to determine whether it (and therefore the L loss subgroup) has an ownership change with respect to the portion of the Year 1 consolidated net operating loss that is apportioned to L1 on September 9, Year 2. L has an ownership change resulting from P's sale of 51 percent of the L stock to A. Therefore, the L loss subgroup has an ownership change with respect to that loss.

Example 4. Loss group and loss subgroup—contemporaneous ownership changes. (a) A owns all the stock of corporation M, M owns 35 percent and B owns 65 percent of the L

stock, and L owns all the L1 stock. The L group has a consolidated net operating loss arising in Year 1 that is carried over to Year 2. On May 19, Year 2, B sells 45 percent of the L stock to M for cash. M, L, and L1 thereafter file consolidated returns. L and L1 are each apportioned a portion of the Year 1 consolidated net operating loss, which they carry over to the M group's Year 2 and Year 3 consolidated return years. The M group has a consolidated net operating loss arising in Year 2 that is carried over to Year 3. On June 9, Year 3, A sells 70 percent of the M stock to C. The following is a graphic illustration of these facts:

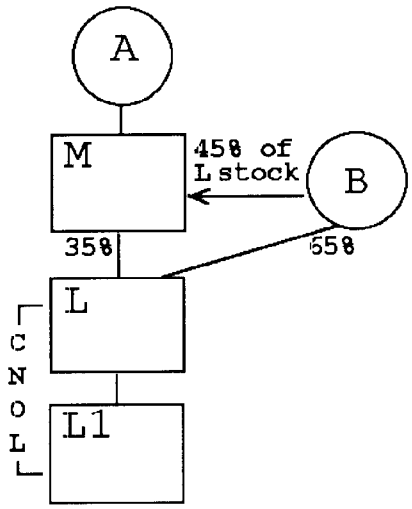

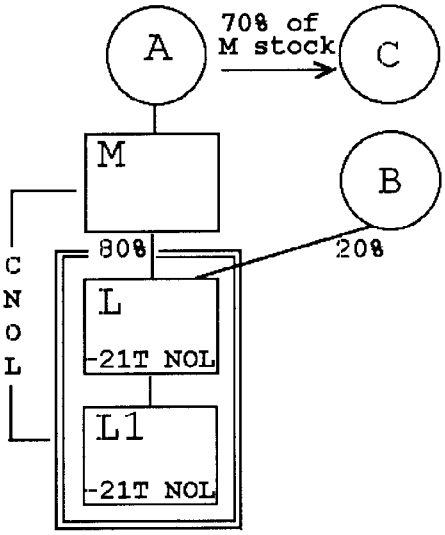

(b) Under §1.1502–91A(d)(1), L and L1 compose a loss subgroup on May 19, Year 2, the day they become members of the M group. Under paragraph (b)(1)(ii) of this section, section 382 and the regulations thereunder are applied to L to determine whether L (and therefore the L loss subgroup) has an ownership change with respect to the loss carryovers from Year 1 on May 19, Year 2, a testing date because of B's sale of L stock to M. The sale of L stock to M results in only a 45 percentage point increase in A's ownership of L stock. Thus, there is no ownership change of L (or the L loss subgroup) with respect to those loss carryovers under paragraph (b)(1)(ii) of this section on that day.

(c) June 9, Year 3, is also a testing date with respect to the L loss subgroup because of A's sale of M stock to C. The sale results in a 56 percentage point increase in C's ownership of L stock, and L has an ownership change. Therefore, the L loss subgroup has an ownership change on that day with respect to the loss carryovers from Year 1.

(d) Paragraph (b)(1)(i) of this section requires that section 382 and the regulations thereunder be applied to M to determine whether M (and therefore the M loss group) has an ownership change with respect to the net operating loss carryover from Year 2 on June 9, Year 3, a testing date because of A's sale of M stock to C. The sale results in a 70 percentage point increase in C's ownership of M stock, and M has an ownership change. Therefore, the M loss group has an ownership change on that day with respect to that loss carryover.

(3) *Special adjustments*—(i) *Common parent succeeded by a new common parent*. For purposes of determining if a loss group has an ownership change, if the common parent of a loss group is succeeded or acquired by a new common parent and the loss group remains in existence, the new common parent is treated as a continuation of the former common parent with appropriate adjustments to take into account shifts in ownership of the former common parent during the testing period (including shifts that occur incident to the common parent's becoming the former common parent).

(ii) *Newly created loss subgroup parent*. For purposes of determining if a loss subgroup has an ownership change, if the member that is the loss subgroup parent has not been the loss subgroup parent for at least 3 years as of a testing date, appropriate adjustments must be made to take into account owner shifts of members of the loss subgroup so that the structure of the loss subgroup does not have the effect of avoiding an ownership change under section 382. (See paragraph (b)(3)(iii) *Example 3* of this section.)

(iii) *Examples*. The following examples illustrate the principles of this paragraph (b)(3).

Example 1. New common parent acquires old common parent. (a) A, who owns all the L stock, sells 30 percent of the L stock to B on August 26, Year 1. L owns all the L1 stock. The L group has a consolidated net operating loss arising in Year 1 that is carried over to Year 3. On July 16, Year 2, A and B transfer their L stock to a newly created holding company, HC, in exchange for 70 percent and 30 percent, respectively, of the HC stock. HC, L, and L1 thereafter file consolidated returns. Under the principles of §1.1502–75(d), the L loss group is treated as remaining in existence, with HC taking the place of L as the new common parent of the loss group. The following is a graphic illustration of these facts:

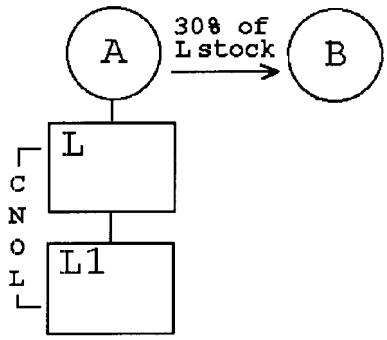

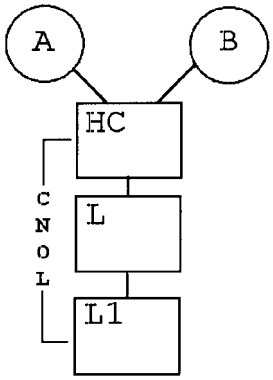

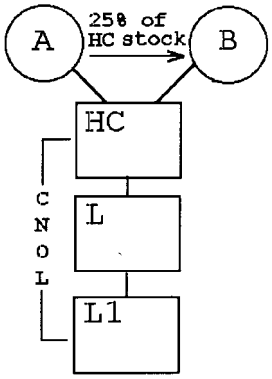

(b) On November 11, Year 3, A sells 25 percent of the HC stock to B. For purposes of determining if the L loss group has an ownership change under paragraph (b)(1)(i) of this section on November 11, Year 3, HC is treated as a continuation of L under paragraph (b)(3)(i) of this section because it acquired L and became the common parent

without terminating the L loss group. Accordingly, HC's testing period commences on January 1, Year 1, the first day of the taxable year of the L loss group in which the consolidated net operating loss that is carried over to Year 3 arose (see §1.382–2T(d)(3)(i)). Immediately after the close of November 11, Year 3, B's percentage ownership interest in the common parent of the loss group (HC) has increased by 55 percentage points over its lowest percentage ownership during the testing period (zero percent). Accordingly, HC and the L loss group have an ownership change on that day.

Example 2. common parent in case in which common parent ceases to exist. (a) A, B, and C each own one-third of the L stock. L owns all the L1 stock. The L group has a consolidated net operating loss arising in Year 2 that is carried over to Year 3. On November 22, Year 3, L is merged into P, a corporation owned by D, and L1 thereafter files consolidated returns with P. A, B, and C, as a result of owning stock of L, own 90 percent of P's stock after the merger. D owns the remaining 10 percent of P's stock. The merger of L into P qualifies as a reverse acquisition of the L group under §1.1502–75(d)(3)(i), and the L loss group is treated as remaining in existence, with P taking the place of L as the new common parent of the L group. The following is a graphic illustration of these facts:

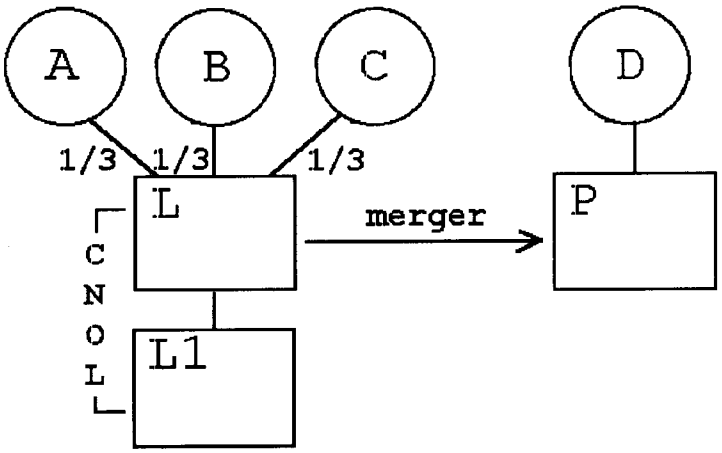

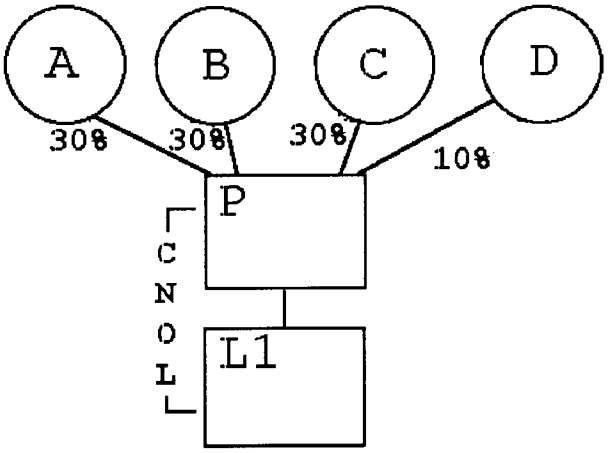

(b) For purposes of determining if the L loss group has an ownership change on November 22, Year 3, the day of the merger, P is treated as a continuation of L so that the testing period for P begins on January 1, Year 2, the first day of the taxable year of the L loss group in which the consolidated net operating loss that is carried over to Year 3 arose. Immediately after the close of November 22, Year 3, D is the only 5-percent shareholder that has increased his ownership interest in P during the testing period (from zero to 10 percentage points).

(c) The facts are the same as in paragraph (a) of this *Example 2*, except that A has held 23⅓ shares (23⅓ percent) of L's stock for five years, and A purchased an additional 10 shares of L stock from E two years before the merger. Immediately after the close of the day of the merger (a testing date), A's ownership interest in P, the common parent of the L loss group, has increased by 6⅔ percentage points over her lowest percentage

ownership during the testing period (23⅓ percent to 30 percent).

(d) The facts are the same as in (a) of this *Example 2*, except that P has a net operating loss arising in Year 1 that is carried to the first consolidated return year ending after the day of the merger. Solely for purposes of determining whether the L loss group has an ownership change under paragraph (b)(1)(i) of this section, the testing period for P commences on January 1, Year 2. P does not determine the earliest day for its testing period by reference to its net operating loss carryover from Year 1, which §§1502–1(f)(3) and 1.1502–75(d)(3)(i) treat as arising in a SRLY. See §1.1502–94A to determine the application of section 382 with respect to P's net operating loss carryover.

Example 3. Newly acquired loss subgroup parent. (a) P owns all the L stock and L owns all the L1 stock. The P group has a consolidated net operating loss arising in Year 1 that is carried over to Year 3. On January 19, Year 2, L issues a 20 percent stock interest to B. On February 5, Year 3, P contributes its L stock to a newly formed subsidiary, HC, in exchange for all the HC stock, and distributes the HC stock to its sole shareholder A. HC, L, and L1 thereafter file consolidated returns. A portion of the P group's Year 1 consolidated net operating loss is apportioned to L and L1 under §1.1502–21T(b) and is carried over to the HC group's year ending after February 5, Year 3. HC, L, and L1 compose a loss subgroup within the meaning of §1.1502–91A(d) with respect to the net operating loss carryovers from Year 1. The following is a graphic illustration of these facts:

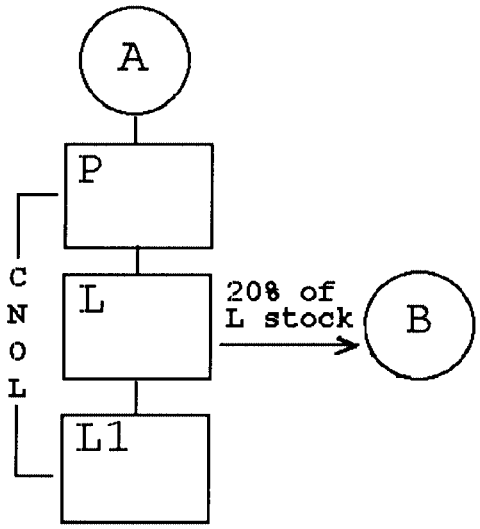

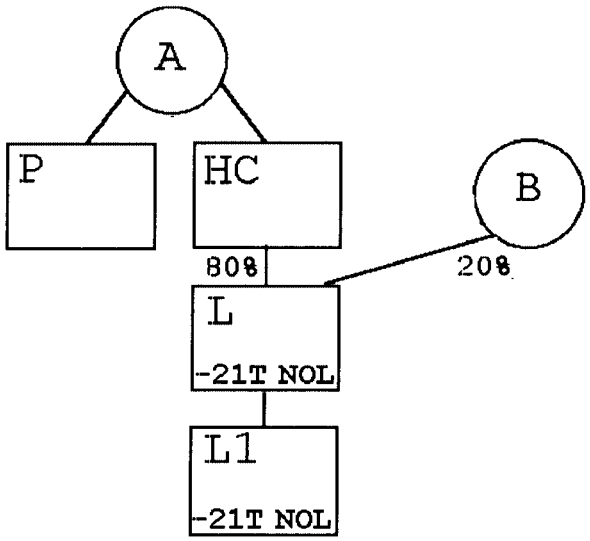

(b) February 5, Year 3, is a testing date for HC as the loss subgroup parent with respect to the net operating loss carryovers of L and L1 from Year 1. See paragraph (b)(1)(ii)(B) of this section. For purposes of determining whether HC has an ownership change on the testing date, appropriate adjustments must be made with respect to the changes in the percentage ownership of the stock of HC because HC was not the loss subgroup parent for at least 3 years prior to the day on which it became a member of the HC loss subgroup (a testing date). The appropriate adjustments include adjustments so that HC succeeds to the owner shifts of other members of the former group. Thus, HC succeeds to the owner shift of L that resulted from the sale of the 20 percent interest to B in determining whether the HC loss subgroup has an ownership change on February 5, Year 3, and

on any subsequent testing date that includes January 19, Year 2.

(4) *End of separate tracking of certain losses.* If § 1.1502–96A(a) (relating to the end of separate tracking of attributes) applies to a loss subgroup, then, while one or more members that were included in the loss subgroup remain members of the consolidated group, there is an ownership change with respect to their attributes described in § 1.1502–96A(a)(2) only if the consolidated group is a loss group and has an ownership change under paragraph (b)(1)(i) of this section (or such a member has an ownership change under § 1.1502–96A(b) (relating to ownership changes of subsidiaries)). If, however, the loss subgroup has had an ownership change before § 1.1502–96A(a) applies, see § 1.1502–96A(c) for the continuing application of the subgroup's section 382 limitation with respect to its prechange subgroup attributes.

(c) *Supplemental rules for determining ownership change*—(1) *Scope.* This paragraph (c) contains a supplemental rule for determining whether there is an ownership change of a loss group (or loss subgroup). It applies in addition to, and not instead of, the rules of paragraph (b) of this section. Thus, for example, if the common parent of the loss group has an ownership change under paragraph (b) of this section, the loss group has an ownership change even if, by applying this paragraph (c), the common parent would not have an ownership change.

(2) *Cause for applying supplemental rule.* This paragraph (c) applies to a loss group (or loss subgroup) if—

(i) Any 5-percent shareholder of the common parent (or loss subgroup parent) increases its percentage ownership interest in the stock of both—

(A) A subsidiary of the loss group (or loss subgroup) other than by a direct or indirect acquisition of stock of the common parent (or loss subgroup parent); and

(B) The common parent (or loss subgroup parent); and

(ii) Those increases occur within a 3 year period ending on any day of a consolidated return year or, if shorter, the period beginning on the first day following the most recent ownership change of the loss group (or loss subgroup).

(3) *Operating rules.* Solely for purposes of this paragraph (c)—

(i) A 5-percent shareholder of the common parent (or loss subgroup parent) is treated as increasing its percentage ownership interest in the common parent (or loss subgroup parent) or a subsidiary to the extent, if any, that any person acting pursuant to a plan or arrangement with the 5-percent shareholder increases its percentage ownership interest in the stock of that entity;

(ii) The rules in section 382(l)(3) and §§ 1.382–2T(h) and 1.382–4(d) (relating to constructive ownership) apply with respect to the stock of the subsidiary by treating such stock as stock of a loss corporation; and

(iii) In the case of a loss subgroup, a subsidiary includes any member of the loss subgroup other than the loss subgroup parent. (The loss subgroup parent is, however, a subsidiary of the loss group of which it is a member.)

(4) *Supplemental ownership change rules.* The determination whether the common parent (or loss subgroup parent) has an ownership change is made by applying paragraph (b)(1) of this section as modified by the following additional rules—

(i) *Additional testing dates for the common parent (or loss subgroup parent).* A testing date for the common parent (or loss subgroup parent) also includes—

(A) Each day on which there is an increase in the percentage ownership of stock of a subsidiary as described in paragraph (c)(2) of this section; and

(B) The first day of the first consolidated return year for which the group is a loss group (or the members compose a loss subgroup);

(ii) *Treatment of subsidiary stock as stock of the common parent (or loss subgroup parent).* The common parent (or loss subgroup parent) is treated as though it had issued to the person acquiring (or deemed to acquire) the subsidiary stock an amount of its own stock (by value) that equals the value of the subsidiary stock represented by the percentage increase in that person's ownership of the subsidiary (determined on a separate entity basis). A similar principle applies if the increase

in percentage ownership interest is effected by a redemption or similar transaction; and

(iii) *5-percent shareholder of the common parent (or loss subgroup parent).* Any person described in paragraph (c)(3)(i) of this section who is acting pursuant to the plan or arrangement is treated as a 5-percent shareholder of the common parent (or loss subgroup parent).

(5) *Examples.* The following examples illustrate the principles of this paragraph (c).

Example 1. Stock of the common parent under supplemental rules. (a) A owns all the L stock. L is not a member of an affiliated group and has a net operating loss carryover arising in Year 1 that is carried over to Year 6. On September 20, Year 6, L transfers all of its assets and liabilities to a newly created subsidiary, S, in exchange for S stock. L and S thereafter file consolidated returns. On November 23, Year 6, B contributes cash to L in exchange for a 45 percent ownership interest in L and contributes cash to S for a 20 percent ownership interest in S.

(b) B is a 5-percent shareholder of L who increases his percentage ownership interest in L and S during the 3 year period ending on November 23, Year 6. Under paragraph (c)(4)(ii) of this section, the determination whether L (the common parent of a loss group) has an ownership change on November 23, Year 6 (or on any testing date in the testing period which includes November 23, Year 6), is made by applying paragraph (b)(1)(i) of this section and by treating the value of B's 20 percent ownership interest in S as if it were L stock issued to B.

Example 2. Plan or arrangement—public offering of subsidiary stock. (a) A owns all the stock of L and L owns all the stock of L1. The L group has a consolidated net operating loss arising in Year 1 that resulted from the operations of L1 and that is carried over to Year 2. As part of a plan, A sells 49 percent of the L stock to B on October 7, Year 2, and L1 issues new stock representing a 20 percent ownership interest in L1 to the public on November 6, Year 2. The following is a graphic illustration of these facts:

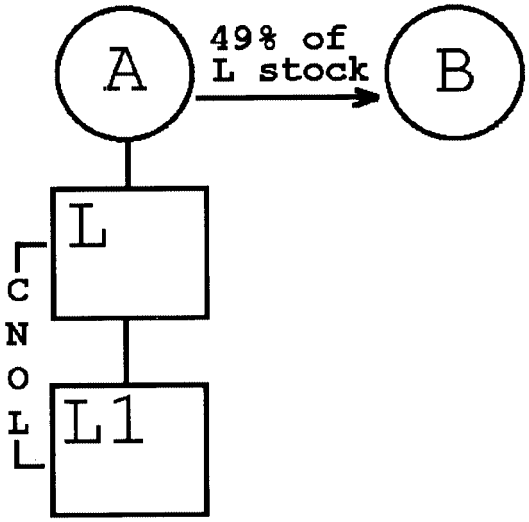

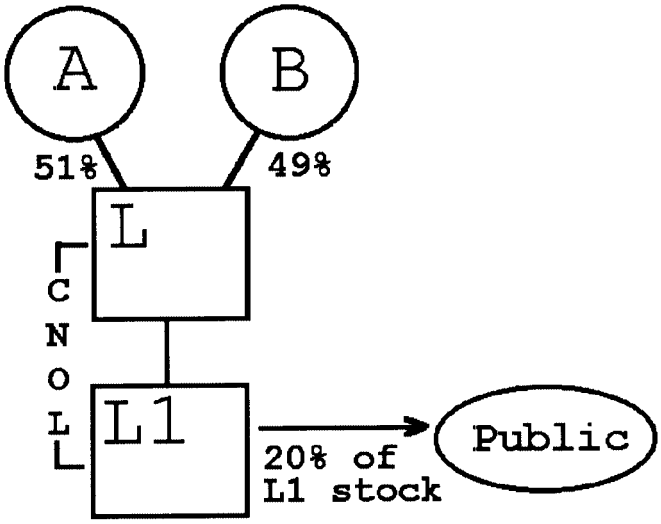

(b) A's sale of the L stock to B does not cause an ownership change of the L loss group on October 7, Year 2, under the rules of § 1.382–2T and paragraph (b)(1)(i) of this section.

(c) Because the issuance of L1 stock to the public occurs in connection with B's acquisition of L stock pursuant to a plan, paragraph (c)(4) of this section applies to determine whether the L loss group has an ownership change on November 6, Year 2 (or on any testing date for which the testing period includes November 6, Year 2).

(d) *Testing period following ownership change under this section.* If a loss group (or a loss subgroup) has had an ownership change under this section, the

testing period for determining a subsequent ownership change with respect to pre-change consolidated attributes (or pre-change subgroup attributes) begins no earlier than the first day following the loss group's (or loss subgroup's) most recent change date.

(e) *Information statements.*—(1) *Common parent of a loss group.* The common parent of a loss group must file the information statement required by §1.382–2T(a)(2)(ii) for a consolidated return year because of any owner shift, equity structure shift, or the issuance or transfer of an option—

(i) With respect to the common parent and with respect to any subsidiary stock subject to paragraph (c) of this section; and

(ii) With respect to an ownership change described in §1.1502–96A(b) (relating to ownership changes of subsidiaries).

(2) *Abbreviated statement with respect to loss subgroups.* The common parent of a consolidated group that has a loss subgroup during a consolidated return year must file the information statement required by §1.382–2T(a)(2)(ii) because of any owner shift, equity structure shift, or issuance or transfer of an option with respect to the loss subgroup parent and with respect to any subsidiary stock subject to paragraph (c) of this section. Instead of filing a separate statement for each loss subgroup parent, the common parent (which is treated as a loss corporation) may file the single statement described in paragraph (e)(1) of this section. In addition to the information concerning stock ownership of the common parent, the single statement must identify each loss subgroup parent and state which loss subgroups, if any, have had ownership changes during the consolidated return year. The loss subgroup parent is, however, still required to maintain the records necessary to determine if the loss subgroup has an ownership change. This paragraph (e)(2) applies with respect to the attributes of a loss subgroup until, under §1.1502–96A(a), the attributes are no longer treated as described in §1.1502–91A(d) (relating to the definition of loss subgroup). After that time, the information statement described in paragraph (e)(1) of this section must be filed with respect to those attributes.

[T.D. 8678, 61 FR 33341, June 27, 1996, as amended by T.D. 8823, 64 FR 36100, July 2, 1999. Redesignated and amended by T.D. 8824, 64 FR 36125, 36127, July 2, 1999]

§ 1.1502–93A Consolidated section 382 limitation (or subgroup section 382 limitation) generally applicable for testing dates before June 25, 1999.

(a) *Determination of the consolidated section 382 limitation (or subgroup section 382 limitation)*—(1) *In general.* Following an ownership change, the consolidated section 382 limitation (or subgroup section 382 limitation) for any post-change year is an amount equal to the value of the loss group (or loss subgroup), as defined in paragraph (b) of this section, multiplied by the long-term tax-exempt rate that applies with respect to the ownership change, and adjusted as required by section 382 and the regulations thereunder. See, for example, section 382(b)(2) (relating to the carryforward of unused section 382 limitation), section 382(b)(3)(B) (relating to the section 382 limitation for the post-change year that includes the change date), section 382(m)(2) (relating to short taxable years), and section 382(h) (relating to recognized built-in gains and section 338 gains).

(2) *Coordination with apportionment rule.* For special rules relating to apportionment of a consolidated section 382 limitation (or a subgroup section 382 limitation) when one or more corporations cease to be members of a loss group (or a loss subgroup) and to aggregation of amounts so apportioned, see §1.1502–95A(c).

(b) *Value of the loss group (or loss subgroup)*—(1) *Stock value immediately before ownership change.* Subject to any adjustment under paragraph (b)(2) of this section, the value of the loss group (or loss subgroup) is the value, immediately before the ownership change, of the stock of each member, other than stock that is owned directly or indirectly by another member. For this purpose—

(i) Ownership is determined under §1.382–2T;

(ii) A member is considered to indirectly own stock of another member

through a nonmember only if the member has a 5-percent or greater ownership interest in the nonmember; and

(iii) Stock includes stock described in section 1504(a)(4) and §1.382–2T(f)(18)(ii) and (iii).

(2) *Adjustment to value.* The value of the loss group (or loss subgroup), as determined under paragraph (b)(1) of this section, is adjusted under any rule in section 382 or the regulations thereunder requiring an adjustment to such value for purposes of computing the amount of the section 382 limitation. See, for example, section 382(e)(2) (redemptions and corporate contractions), section 382(l)(1) (certain capital contributions) and section 382(l)(4) (ownership of substantial nonbusiness assets). The value of the loss group (or loss subgroup) determined under this paragraph (b) is also adjusted to the extent necessary to prevent any duplication of the value of the stock of a member. For example, the principles of §1.382–8 (relating to controlled groups of corporations) apply in determining the value of a loss group (or loss subgroup) if, under §1.1502–91A(g)(2), members are not included in the determination whether the group (or loss subgroup) has a net unrealized built-in loss.

(3) *Examples.* The following examples illustrate the principles of this paragraph (b).

Example 1. Basic case. (a) L, L1, and L2 compose a loss group. L has outstanding common stock, the value of which is $100. L1 has outstanding common stock and preferred stock that is described in section 1504(a)(4). L owns 90 percent of the L1 common stock, and A owns the remaining 10 percent of the L1 common stock plus all the preferred stock. The value of the L1 common stock is $40, and the value of the L1 preferred stock is $30. L2 has outstanding common stock, 50 percent of which is owned by L and 50 percent by L1. The L group has an ownership change. The following is a graphic illustration of these facts:

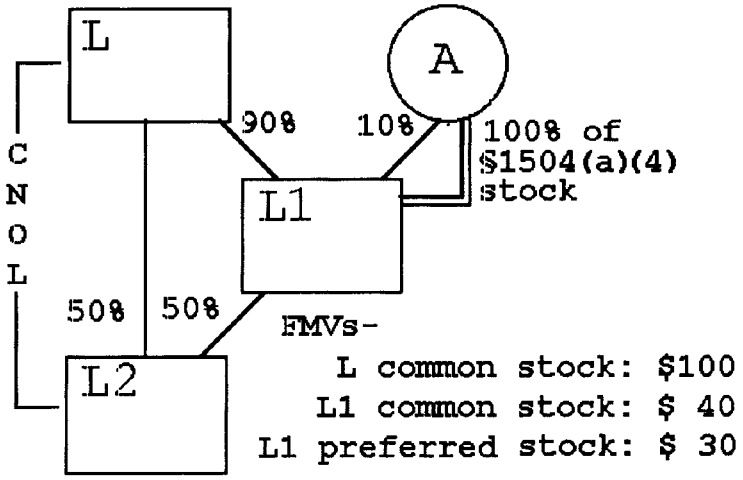

(b) Under paragraph (b)(1) of this section, the L group does not include the value of the stock of any member that is owned directly or indirectly by another member in computing its consolidated section 382 limitation. Accordingly, the value of the stock of the loss group is $134, the sum of the value of—

(1) The common stock of L ($100);

(2) the 10 percent of the L1 common stock ($4) owned by A; and

(3) The L1 preferred stock ($30) owned by A.

Example 2. Indirect ownership. (a) L and L1 compose a consolidated group. L's stock has a value of $100. L owns 80 shares (worth $80) and corporation M owns 20 shares (worth $20) of the L1 stock. L also owns 79 percent of the stock of corporation M. The L group has an ownership change. The following is a graphic illustration of these facts:

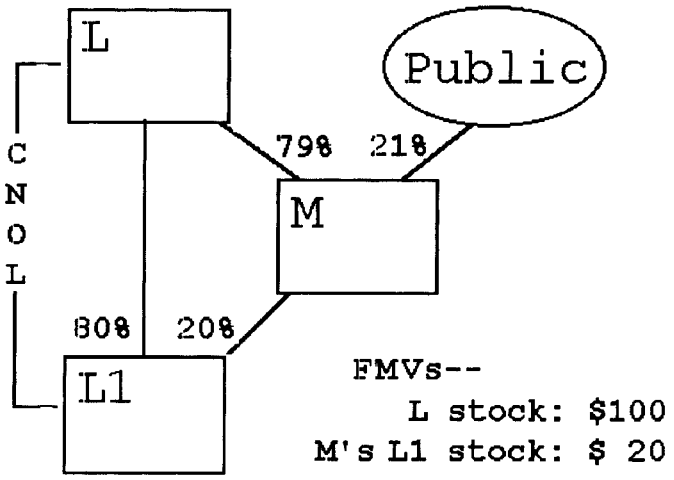

(b) Under paragraph (b)(1) of this section, because of L's more than 5 percent ownership interest in M, a nonmember, L is considered to indirectly own 15.8 shares of the L1 stock held by M (79% x 20 shares). The value of the L loss group is $104.20, the sum of the values of—

(1) The L stock ($100); and

(2) The L1 stock not owned directly or indirectly by L (21% x $20, or $4.20).

(c) *Recognized built-in gain of a loss group or loss subgroup.* If a loss group (or loss subgroup) has a net unrealized built-in gain, any recognized built-in gain of the loss group (or loss subgroup) is taken into account under section 382(h) in determining the consolidated section 382 limitation (or subgroup section 382 limitation). See § 1.1502–99A(a)(2) for a special rule relating to the application of § 1.502–93(c)(2) to consolidated return years for which the due date of the return is after June 25, 1999.

(d) *Continuity of business*—(1) *In general.* A loss group (or a loss subgroup) is treated as a single entity for purposes of determining whether it satisfies the continuity of business enterprise requirement of section 382(c)(1).

(2) *Example.* The following example illustrates the principle of this paragraph (d).

Example. Continuity of business enterprise. L owns all the stock of two subsidiaries, L1 and L2. The L group has an ownership change. It has pre-change consolidated attributes attributable to L2. Each of the members has historically conducted a separate line of business. Each line of business is approximately equal in value. One year after the ownership change, L discontinues its separate business and the business of L2. The separate business of L1 is continued for the remainder of the 2 year period following the ownership change. The continuity of business enterprise requirement of section 382(c)(1) is met even though the separate businesses of L and L2 are discontinued.

(e) *Limitations of losses under other rules.* If a section 382 limitation for a post-change year exceeds the consolidated taxable income that may be offset by pre-change attributes for any reason, including the application of the limitation of § 1.1502–21(c) or 1.1502–21T(c) in effect prior to June 25, 1999, as contained in 26 CFR part 1 revised April 1, 1999, as applicable, the amount of the excess is carried forward under section 382(b)(2) (relating to the carryforward of unused section 382 limitation).

[T.D. 8678, 61 FR 33351, June 27, 1996, as amended by T.D. 8823, 64 FR 36100, July 2, 1999. Redesignated and amended by T.D. 8824, 64 FR 36125, 36128, July 2, 1999]

§ 1.1502–94A Coordination with section 382 and the regulations thereunder when a corporation becomes a member of a consolidated group) generally applicable for corporations becoming members of a group before June 25, 1999.

(a) *Scope*—(1) *In general*. This section applies section 382 and the regulations thereunder to a corporation that is a new loss member of a consolidated group. A corporation is a new loss member if it—

(i) Carries over a net operating loss that arose (or is treated under § 1.1502–21(c) or 1.1502–21T(c) in effect prior to June 25, 1999, as contained in 26 CFR part 1 revised April 1, 1999, as applicable, as arising) in a SRLY with respect to the current group, and that is not described in § 1.1502–91A(d)(1); or

(ii) Has a net unrealized built-in loss (determined under paragraph (c) of this section on the day it becomes a member of the current group by treating that day as a change date) that is not taken into account under § 1.1502–91A(d)(2) in determining whether two or more corporations compose a loss subgroup.

(2) *Successor corporation as new loss member*. A new loss member also includes any successor to a corporation that has a net operating loss carryover arising in a SRLY and that is treated as remaining in existence under § 1.382–2(a)(1)(ii) following a transaction described in section 381(a).

(3) *Coordination in the case of a loss subgroup*. For rules regarding the determination of whether there is an ownership change of a loss subgroup with respect to a net operating loss or a net unrealized built-in loss described in § 1.1502–91A(d) (relating to the definition of loss subgroup) and the computation of a subgroup section 382 limitation following such an ownership change, see §§ 1.1502–92A and 1.1502–93A.

(4) *End of separate tracking of certain losses*. If § 1.1502–96A(a) (relating to the end of separate tracking of attributes) applies to a new loss member, then, while that member remains a member of the consolidated group, there is an ownership change with respect to its attributes described in § 1.1502–96A(a)(2) only if the consolidated group is a loss group and has an ownership change under § 1.1502–92A(b)(1)(i) (or that member has an ownership change under § 1.1502–96A(b) (relating to ownership changes of subsidiaries)). If, however, the new loss member has had an ownership change before § 1.1502–96A(a) applies, see § 1.1502–96A(c) for the continuing application of the section 382 limitation with respect to the member's pre-change losses.

(5) *Cross-reference*. See section 382(a) and § 1.1502–96A(c) for the continuing effect of an ownership change after a corporation becomes or ceases to be a member.

(b) *Application of section 382 to a new loss member*—(1) *In general*. Section 382 and the regulations thereunder apply to a new loss member to determine, on a separate entity basis, whether and to what extent a section 382 limitation applies to limit the amount of consolidated taxable income that may be offset by the new loss member's pre-change separate attributes. For example, if an ownership change with respect to the new loss member occurs under section 382 and the regulations thereunder, the amount of consolidated taxable income for any post-change year that may be offset by the new loss member's pre-change separate attributes shall not exceed the section 382 limitation as determined separately under section 382(b) with respect to that member for such year. If the post-change year includes the change date, section 382(b)(3)(A) is applied so that the section 382 limitation of the new loss member does not apply to the portion of the taxable income for such year that is allocable to the period in such year on or before the change date. See generally § 1.382–6 (relating to the allocation of income and loss).

(2) *Adjustment to value*. The value of the new loss member is adjusted to the extent necessary to prevent any duplication of the value of the stock of a member. For example, the principles of § 1.382–8T (relating to controlled groups of corporations) apply in determining the value of a new loss member.

(3) *Pre-change separate attribute defined*. A pre-change separate attribute of a new loss member is—

(i) Any net operating loss carryover of the new loss member described in paragraph (a)(1) of this section; and

(ii) Any recognized built-in loss of the new loss member.

(4) *Examples*. The following examples illustrate the principles of this paragraph (b).

Example 1. Basic case. (a) A and P each own 50 percent of the L stock. On December 19, Year 6, P purchases 30 percent of the L stock from A for cash. L has net operating losses arising in Year 1 and Year 2 that it carries over to Year 6 and Year 7. The following is a graphic illustration of these facts:

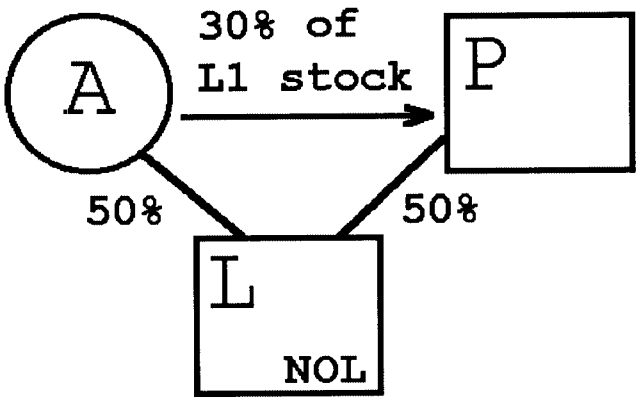

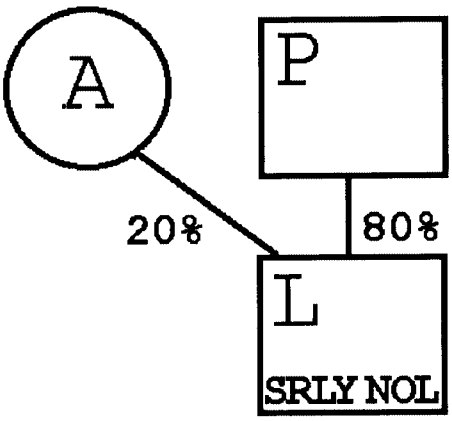

(b) L is a new loss member because it has net operating loss carryovers that arose in a SRLY with respect to the P group and L is not a member of a loss subgroup under §1.1502–91A(d). Under section 382 and the regulations thereunder, L is a loss corporation on December 19, Year 6, that day is a testing date for L, and the testing period for L commences on December 20, Year 3.

(c) P's purchase of L stock does not cause an ownership change of L on December 19, Year 6, with respect to the net operating loss carryovers from Year 1 and Year 2 under section 382 and §1.382–2T. The use of the loss carryovers, however, is subject to limitation under §1.1502–21(c) or 1.1502–21T(c) in effect prior to June 25, 1999, as contained in 26 CFR part 1 revised April 1, 1999, as applicable.

Example 2. Multiple new loss members. (a) The facts are the same as in *Example 1*, and, on December 31, Year 6, L purchases all the stock of L1 from B for cash. L1 has a net operating loss of $40 arising in Year 3 that it carries over to Year 7. The following is a graphic illustration of these facts:

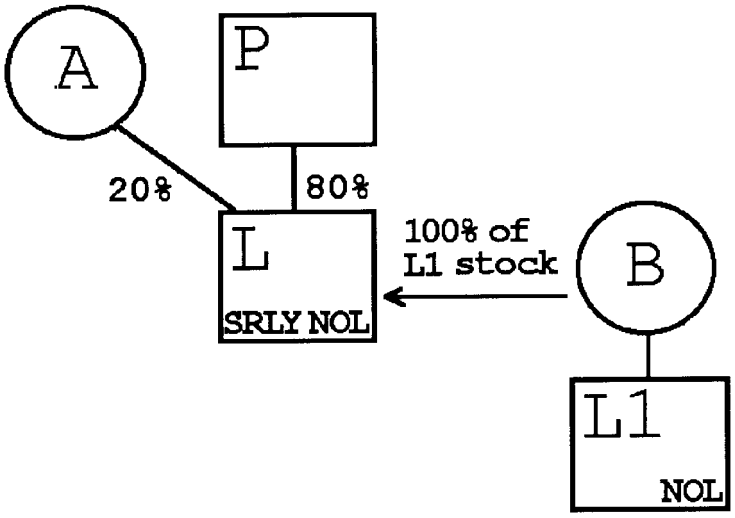

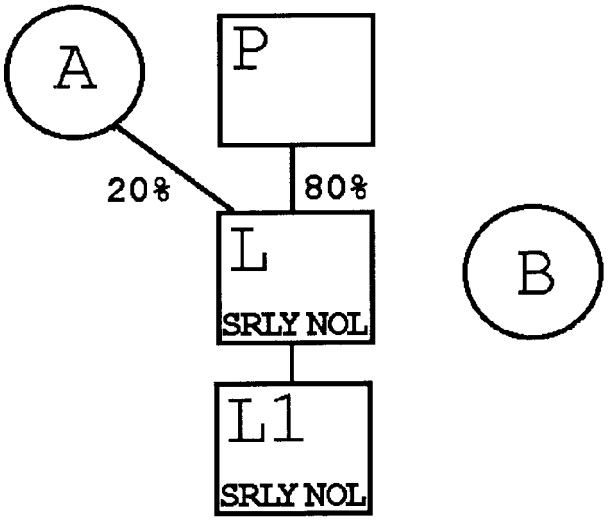

(b) L1 is a new loss member because it has a net operating loss carryover from Year 3 that arose in a SRLY with respect to the P group and L1 is not a member of a loss subgroup under §1.1502–91A(d)(1).

(c) L's purchase of all the stock of L1 causes an ownership change of L1 on December 31, Year 6, under section 382 and §1.382–2T. Accordingly, a section 382 limitation based on the value of the L1 stock immediately before the ownership change limits the amount of consolidated taxable income of the P group for any post-change year that may be offset by L1's loss from Year 3.

(d) L1's ownership change in connection with its becoming a member of the P group is an ownership change described in §1.1502–96A(a). Thus, starting on January 1, Year 7, the P group no longer separately tracks owner shifts of the stock of L1 with respect to L1's loss from Year 3. Instead, the P group is a loss group because of such loss under §1.1502–91A(c).

Example 3. Ownership changes of new loss members. (a) The facts are the same as in *Example 2*, and, on April 30, Year 7, C purchases all the stock of P for cash.

(b) L is a new loss member on April 30, Year 7, because its Year 1 and Year 2 losses arose in SRLYs with respect to the P group and it is not a member of a loss subgroup under §1.1502–91A(d)(1). The testing period for L commences on May 1, Year 4. C's purchase of all the P stock causes an ownership change of L on April 30, Year 7, under section 382 and §1.382–2T with respect to its Year 1 and Year 2 losses. Accordingly, a section 382 limitation based on the value of the L stock immediately before the ownership change limits the amount of consolidated taxable income of the P group for any post-change year that may be offset by L's Year 1 and Year 2 losses. See also §1.1502–21T in effect prior to June 25, 1999, contained in 26 CFR Part 1, revised April 1, 1999, or §1.1502–21, as applicable.

(c) The P group is a loss group on April 30, Year 7, because it is entitled to use L1's loss from Year 3, and such loss is no longer treated as a loss of a new loss member starting the day after L1's ownership change on December 31, Year 6. See §§1.1502–96A(a) and 1.1502–91A(c)(2). C's purchase of all the P stock causes an ownership change of P, and therefore the P loss group, on April 30, Year 7, with respect to L1's Year 3 loss. Accordingly, a consolidated section 382 limitation based on the value of the P stock immediately before the ownership change limits the amount of consolidated taxable income of the P group for any post-change year that may be offset by L1's Year 3 loss.

(c) *Built-in gains and losses.* As the context may require, the principles of §§1.1502–91A(g) and (h) and 1.1502–93A(c) (relating to built-in gains and losses) apply to a new loss member on a separate entity basis. See §1.1502–91A(g)(3).

(d) *Information statements.* The common parent of a consolidated group that has a new loss member subject to paragraph (b)(1) of this section during a consolidated return year must file the information statement required by §1.382–2T(a)(2)(ii) because of any owner shift, equity structure shift, or issuance or transfer of an option with respect to the new loss member. Instead of filing a separate statement for each new loss member the common parent may file a single statement described in §1.382–2T(a)(2)(ii) with respect to the stock ownership of the common parent (which is treated as a loss corporation). In addition to the information concerning stock ownership of the common parent, the single statement must identify each new loss member and state which new loss members, if any, have had ownership changes during the consolidated return year. The new loss member is, however, required to maintain the records necessary to determine if it has an ownership change. This paragraph (d) applies with respect to the attributes of a new loss member until an event occurs which ends separate tracking under §1.1502–96A(a). After that time, the information statement described in §1.1502–92A(e)(1) must be filed with respect to these attributes.

[T.D. 8678, 61 FR 33352, June 27, 1996, as amended by T.D. 8823, 64 FR 36100, July 2, 1999. Redesignated and amended by T.D. 8824, 64 FR 36125, 36126, 36128, July 2, 1999]

§ 1.1502–95A Rules on ceasing to be a member of a consolidated group generally applicable for corporations ceasing to be members before June 25, 1999.

(a) *In general*—(1) *Consolidated group.* This section provides rules for applying section 382 on or after the day that a member ceases to be a member of a consolidated group (or loss subgroup). The rules concern how to determine whether an ownership change occurs with respect to losses of the member, and how a consolidated section 382 limitation (or subgroup section 382 limitation) is apportioned to the member. As the context requires, a reference in this section to a loss group, a member, or a

corporation also includes a reference to a loss subgroup, and a reference to a consolidated section 382 limitation also includes a reference to a subgroup section 382 limitation.

(2) *Election by common parent.* Only the common parent (not the loss subgroup parent) may make the election under paragraph (c) of this section to apportion either a consolidated section 382 limitation or a subgroup section 382 limitation.

(3) *Coordination with §§ 1.1502–91A through 1.1502–93A.* For rules regarding the determination of whether there is an ownership change of a loss subgroup and the computation of a subgroup section 382 limitation following such an ownership change, see §§ 1.1502–91A through 1.1502–93A.

(b) *Separate application of section 382 when a member leaves a consolidated group*—(1) *In general.* Except as provided in §§ 1.1502–91A through 1.1502–93A (relating to rules applicable to loss groups and loss subgroups), section 382 and the regulations thereunder apply to a corporation on a separate entity basis after it ceases to be a member of a consolidated group (or loss subgroup). Solely for purposes of determining whether a corporation has an ownership change—

(i) Any portion of a consolidated net operating loss that is apportioned to the corporation under § 1.1502–21(b) or 1.1502–21T(b) in effect prior to June 25, 1999, as contained in 26 CFR part 1 revised April 1, 1999, as applicable is treated as a net operating loss of the corporation beginning on the first day of the taxable year in which the loss arose;

(ii) The testing period may include the period during which (or before which) the corporation was a member of the group (or loss subgroup); and

(iii) Except to the extent provided in § 1.1502–20(g) (relating to reattributed losses), the day it ceases to be a member of a consolidated group is treated as a testing date of the corporation within the meaning of § 1.382–2(a)(4).

(2) *Effect of a prior ownership change of the group.* If a loss group has had an ownership change under § 1.1502–92A before a corporation ceases to be a member of a consolidated group (the former member)—

(i) Any pre-change consolidated attribute that is subject to a consolidated section 382 limitation continues to be treated as a pre-change loss with respect to the former member after the attribute is apportioned to the former member;

(ii) The former member's section 382 limitation with respect to such attribute is zero except to the extent the common parent apportions under paragraph (c) of this section all or a part of the consolidated section 382 limitation to the former member;

(iii) The testing period for determining a subsequent ownership change with respect to such attribute begins no earlier than the first day following the loss group's most recent change date; and

(iv) As generally provided under section 382, an ownership change of the former member that occurs on or after the day it ceases to be a member of a loss group may result in an additional, lesser limitation amount with respect to such loss.

(3) *Application in the case of a loss subgroup.* If two or more former members are included in the same loss subgroup immediately after they cease to be members of a consolidated group, the principles of paragraphs (b) and (c) of this section apply to the loss subgroup. Therefore, for example, an apportionment by the common parent under paragraph (c) of this section is made to the loss subgroup rather than separately to its members. –

(4) *Examples.* The following examples illustrate the principles of this paragraph (b).

Example 1. Treatment of departing member as a separate corporation throughout the testing period. (a) A owns all the L stock. L owns all the stock of L1 and L2. The L group has a consolidated net operating loss arising in Year 1 that is carried over to Year 3. On January 12, Year 2, A sells 30 percent of the L stock to B. On February 7, Year 3, L sells 40 percent of the L2 stock to C, and L2 ceases to be a member of the group. A portion of the Year 1 consolidated net operating loss is apportioned to L2 under § 1.1502–21(b) or 1.1502–21T(b) in effect prior to June 25, 1999, as contained in 26 CFR part 1 revised April 1, 1999, as applicable and is carried to L2's first separate return year, which ends December 31, Year 3. The following is a graphic illustration of these facts:

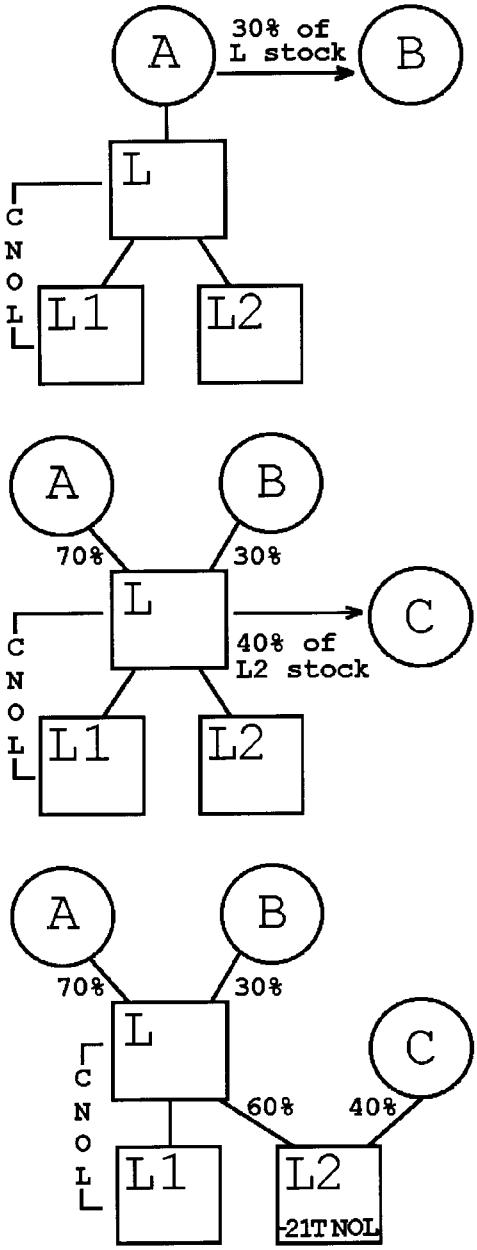

(b) Under paragraph (b)(1) of this section, L2 is a loss corporation on February 7, Year 3. Under paragraph (b)(1)(iii) of this section, February 7, Year 3, is a testing date. Under paragraph (b)(1)(ii) of this section, the testing period for L2 with respect to this testing date commences on January 1, Year 1, the first day of the taxable year in which the

portion of the consolidated net operating loss apportioned to L2 arose. Therefore, in determining whether L2 has an ownership change on February 7, Year 3, B's purchase of 30 percent of the L stock and C's purchase of 40 percent of the L2 stock are each owner shifts. L2 has an ownership change under section 382(g) and §1.382–2T because B and C have increased their ownership interests in L2 by 18 and 40 percentage points, respectively, during the testing period.

Example 2. Effect of prior ownership change of loss group. (a) L owns all the L1 stock and L1 owns all the L2 stock. The L loss group had an ownership change under §1.1502–92A in Year 2 with respect to a consolidated net operating loss arising in Year 1 and carried over to Year 2 and Year 3. The consolidated section 382 limitation computed solely on the basis of the value of the stock of L is $100. On December 31, Year 2, L1 sells 25 percent of the stock of L2 to B. L2 is apportioned a portion of the Year 1 consolidated net operating loss which it carries over to its first separate return year ending after December 31, Year 2. L2's separate section 382 limitation with respect to this loss is zero unless L elects to apportion all or a part of the consolidated section 382 limitation to L2. (See paragraph (c) of this section for rules regarding the apportionment of a consolidated section 382 limitation.) L apportions $50 of the consolidated section 382 limitation to L2.

(b) On December 31, Year 3, L1 sells its remaining 75 percent stock interest in L2 to C, resulting in an ownership change of L2. L2's section 382 limitation computed on the change date with respect to the value of its stock is $30. Accordingly, L2's section 382 limitation for post-change years ending after December 31, Year 3, with respect to its pre-change losses, including the consolidated net operating losses apportioned to it from the L group, is $30, adjusted as required by section 382 and the regulations thereunder.

(c) *Apportionment of a consolidated section 382 limitation*—(1) *In general.* The common parent may elect to apportion all or any part of a consolidated section 382 limitation to a former member (or loss subgroup). See paragraph (e) of this section for the time and manner of making the election to apportion.

(2) *Amount of apportionment.* The common parent may apportion all or part of each element of the consolidated section 382 limitation determined under §1.1502–93A. For this purpose, the consolidated section 382 limitation consists of two elements—

(i) The value element, which is the element of the limitation determined under section 382(b)(1) (relating to value multiplied by the long-term tax-exempt rate) without regard to such adjustments as those described in section 382(b)(2) (relating to the carryforward of unused section 382 limitation), section 382(b)(3)(B) (relating to the section 382 limitation for the post-change year that includes the change date), section 382(h) (relating to built-in gains and section 338 gains), and section 382(m)(2) (relating to short taxable years); and

(ii) The adjustment element, which is so much (if any) of the limitation for the taxable year during which the former member ceases to be a member of the consolidated group that is attributable to a carryover of unused limitation under section 382(b)(2) or to recognized built-in gains under 382(h).

(3) *Effect of apportionment on the consolidated section 382 limitation.* The value element of the consolidated section 382 limitation for any post-change year ending after the day that a former member (or loss subgroup) ceases to be a member(s) is reduced to the extent that it is apportioned under this paragraph (c). The consolidated section 382 limitation for the post-change year in which the former member (or loss subgroup) ceases to be a member(s) is also reduced to the extent that the adjustment element for that year is apportioned under this paragraph (c).

(4) *Effect on corporations to which the consolidated section 382 limitation is apportioned.* The amount of the value element that is apportioned to a former member (or loss subgroup) is treated as the amount determined under section 382(b)(1) for purposes of determining the amount of that corporation's (or loss subgroup's) section 382 limitation for any taxable year ending after the former member (or loss subgroup) ceases to be a member(s). Appropriate adjustments must be made to the limitation based on the value element so apportioned for a short taxable year, carryforward of unused limitation, or any other adjustment required under section 382. The adjustment element apportioned to a former member (or loss subgroup) is treated as an adjustment under section 382(b)(2) or section

382(h), as appropriate, for the first taxable year after the member (or members) ceases to be a member (or members).

(5) *Deemed apportionment when loss group terminates.* If a loss group terminates, to the extent the consolidated section 382 limitation is not apportioned under paragraph (c)(1) of this section, the consolidated section 382 limitation is deemed to be apportioned to the loss subgroup that includes the common parent, or, if there is no loss subgroup that includes the common parent immediately after the loss group terminates, to the common parent. A loss group terminates on the first day of the first taxable year that is a separate return year with respect to each member of the former loss group.

(6) *Appropriate adjustments when former member leaves during the year.* Appropriate adjustments are made to the consolidated section 382 limitation for the consolidated return year during which the former member (or loss subgroup) ceases to be a member(s) to reflect the inclusion of the former member in the loss group for a portion of that year.

(7) *Examples.* The following examples illustrate the principles of this paragraph (c).

Example 1. Consequence of apportionment. (a) L owns all the L1 stock and L1 owns all the L2 stock. The L group has a $200 consolidated net operating loss arising in Year 1 that is carried over to Year 2. At the close of December 31, Year 1, the group has an ownership change under §1.1502–92A. The ownership change results in a consolidated section 382 limitation of $10 based on the value of the stock of the group. On August 29, Year 2, L1 sells 30 percent of the stock of L2 to A. L2 is apportioned $90 of the group's $200 consolidated net operating loss under §1.1502–21(b) or 1.1502–21T(b) in effect prior to June 25, 1999, as contained in 26 CFR part 1 revised April 1, 1999, as applicable. L, the common parent, elects to apportion $6 of the consolidated section 382 limitation to L2. The following is a graphic illustration of these facts:

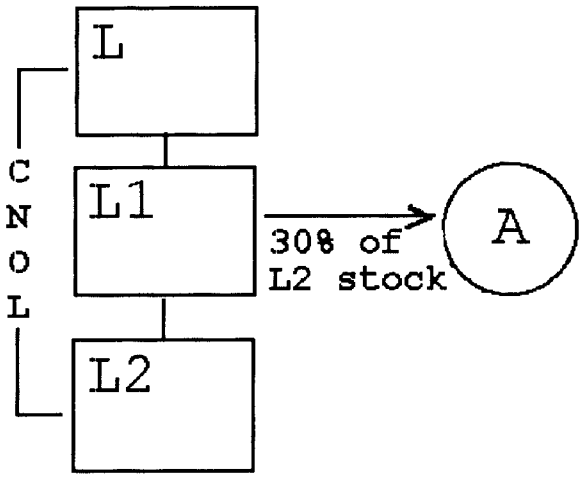

(b) For its separate return years ending after August 29, Year 2 (other than the taxable year ending December 31, Year 2), L2's section 382 limitation with respect to the $90 of the group's net operating loss apportioned to it is $6, adjusted, as appropriate, for any short taxable year, unused section 382 limitation, or other adjustment. For its consolidated return years ending after August 29, Year 2, (other than the year ending December 31, Year 2) the L group's consolidated section 382 limitation with respect to the remaining $110 of pre-change consolidated attribute is $4 ($10 minus the $6 value element apportioned to L2), adjusted, as appropriate, for any short taxable year, unused section 382 limitation, or other adjustment.

(c) For the L group's consolidated return year ending December 31, Year 2, the value element of its consolidated section 382 limitation is increased by $4 (rounded to the nearest dollar), to account for the period during which L2 was a member of the L group ($6, the consolidated section 382 limitation apportioned to L2, times 241/365, the ratio of the number of days during Year 2 that L2 is a member of the group to the number of days in the group's consolidated return year). See paragraph (c)(6) of this section. Therefore, the value element of the consolidated section 382 limitation for Year 2 of the L group is $8 (rounded to the nearest dollar).

(d) The section 382 limitation for L2's short taxable year ending December 31, Year 2, is $2 (rounded to the nearest dollar), which is the amount that bears the same relationship to $6, the value element of the consolidated section 382 limitation apportioned to L2, as the number of days during that short taxable year, 124 days, bears to 365. See §1.382–4(c).

Example 2. Consequence of no apportionment. The facts are the same as in *Example 1,* except that L does not elect to apportion any portion of the consolidated section 382 limitation to L2. For its separate return years ending after August 29, Year 2, L2's section 382 limitation with respect to the $90 of the group's pre-change consolidated attribute apportioned to L2 is zero under paragraph (b)(2)(ii) of this section. Thus, the $90 consolidated net operating loss apportioned to L2 cannot offset L2's taxable income in any of its separate return years ending after August 29, Year 2. For its consolidated return years ending after August 29, Year 2, the L group's consolidated section 382 limitation with respect to the remaining $110 of pre-change consolidated attribute is $10, adjusted, as appropriate, for any short taxable year, unused section 382 limitation, or other adjustment.

Example 3. Apportionment of adjustment element. The facts are the same as in *Example 1,* except that L2 ceases to be a member of the L group on August 29, Year 3, and the L group has a $4 carryforward of an unused consolidated section 382 limitation (under section 382(b)(2)) to the 1993 consolidated return year.

The carryover of unused limitation increases the consolidated section 382 limitation for the Year 3 consolidated return year from $10 to $14. L may elect to apportion all or any portion of the $10 value element and all or any portion of the $4 adjustment element to L2.

(d) *Rules pertaining to ceasing to be a member of a loss subgroup*—(1) *In general.* A corporation ceases to be a member of a loss subgroup—

(i) On the first day of the first taxable year for which it files a separate return; or

(ii) The first day that it ceases to bear a relationship described in section 1504(a)(1) to the loss subgroup parent (treating for this purpose the loss subgroup parent as the common parent described in section 1504(a)(1)(A)).

(2) *Examples.* The principles of this paragraph (d) are illustrated by the following examples.

Example 1. Basic case. (a) P owns all the L stock, L owns all the L1 stock and L1 owns all the L2 stock. The P group has a consolidated net operating loss arising in Year 1 that is carried over to Year 2. On December 11, Year 2, P sells all the stock of L to corporation M. Each of L, L1, and L2 is apportioned a portion of the Year 1 consolidated net operating loss, and thereafter each joins with M in filing consolidated returns. Under §1.1502–92A, the L loss subgroup has an ownership change on December 11, Year 2. The L loss subgroup has a subgroup section 382 limitation of $100. The following is a graphic illustration of these facts:

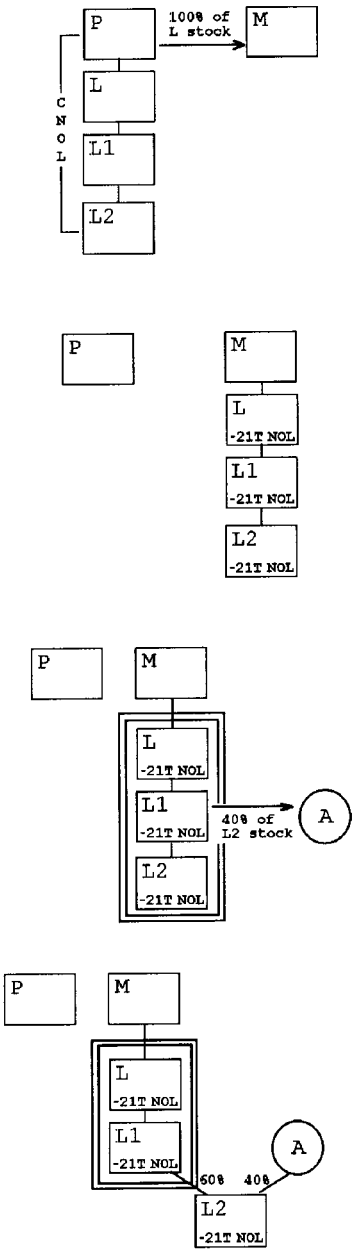

(b) On May 22, Year 3, L1 sells 40 percent of the L2 stock to A. L2 carries over a portion of the P group's net operating loss from Year 1 to its separate return year ending December 31, Year 3. Under paragraph (d)(1) of this section, L2 ceases to be a member of the L loss subgroup on May 22, Year 3, which is both (1) the first day of the first taxable year

for which it files a separate return and (2) the day it ceases to bear a relationship described in section 1504(a)(1) to the loss subgroup parent, L. The net operating loss of L2 that is carried over from the P group is treated as a pre-change loss of L2 for its separate return years ending after May 22, Year 3. Under paragraphs (a)(2) and (b)(2) of this section, the separate section 382 limitation with respect to this loss is zero unless M elects to apportion all or a part of the subgroup section 382 limitation of the L loss subgroup to L2.

Example 2. Formation of a new loss subgroup. The facts are the same as in *Example 1*, except that A purchases 40 percent of the L1 stock from L rather than purchasing L2 stock from L1. L1 and L2 file a consolidated return for their first taxable year ending after May 22, Year 3, and each of L1 and L2 carries over a part of the net operating loss of the P group that arose in Year 1. Under paragraph (d)(1) of this section, L1 and L2 cease to be members of the L loss subgroup on May 22, Year 3. The net operating losses carried over from the P group are treated as pre-change subgroup attributes of the loss subgroup composed of L1 and L2. The subgroup section 382 limitation with respect to those losses is zero unless M elects to apportion all or part of the subgroup section 382 limitation of the L loss subgroup to the L1 loss subgroup. The following is a graphic illustration of these facts:

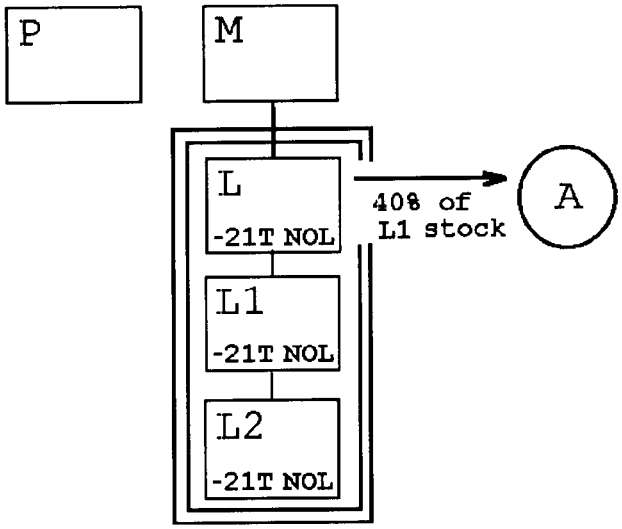

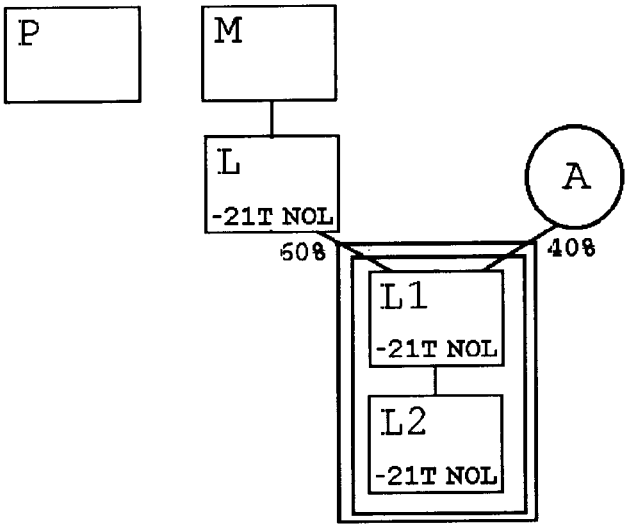

Example 3. Ceasing to bear a section 1504(a)(1) relationship to a loss subgroup parent. (a) A owns all the stock of P, and P owns all the stock of L1 and L2. The P group has a consolidated net operating loss arising in Year 1 that is carried over to Year 3 and Year 4. Corporation M acquires all the stock of P on November 11, Year 3, and P, L1, and L2 thereafter file consolidated returns with M. M's acquisition results in an ownership change of the P loss subgroup under §1.1502–92A(b)(1)(ii). The following is a graphic illustration of these facts:

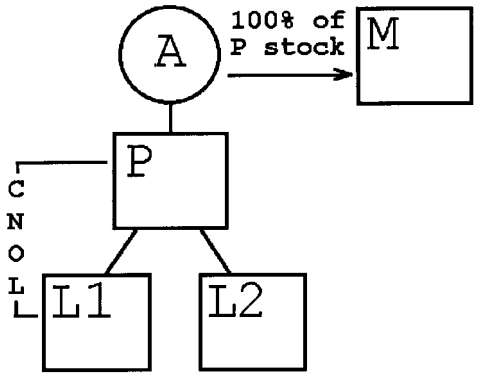

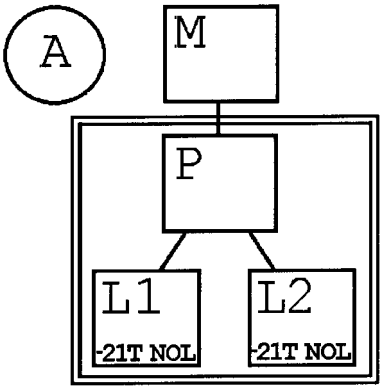

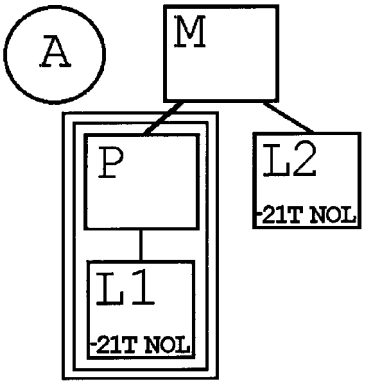

(b) P distributes the L2 stock to M on October 7, Year 4. L2 ceases to be a member of the P loss subgroup on October 7, Year 4, the first day that it ceases to bear the relationship described in section 1504(a)(1) to P, the P loss subgroup parent. See paragraph (d)(1)(ii) of this section. Thus, the section 382 limitation with respect to the pre-change

subgroup attributes attributable to L2 is zero except to the extent M elects to apportion all or a part of the subgroup section 382 limitation of the P loss subgroup to L2.

Example 4. Relationship through a successor. The facts are the same as in *Example 3*, except that, instead of P's distributing the stock of L2, L2 merges into L1 on October 7, Year 4. L1 (as successor to L2 in the merger within the meaning of §1.382–2T(f)(4)) continues to bear a relationship described in section 1504(a)(1) to P, the loss subgroup parent. Thus, L2 does not cease to be a member of the P loss subgroup as a result of the merger.

(e) *Filing the election to apportion*—(1) *Form of the election to apportion.* An election under paragraph (c) of this section must be made by the common parent. The election must be made in the form of the following statement: ''THIS IS AN ELECTION UNDER §1.1502–95A OF THE INCOME TAX REGULATIONS TO APPORTION ALL OR PART OF THE [insert either CONSOLIDATED SECTION 382 LIMITATION or SUBGROUP SECTION 382 LIMITATION, as appropriate] TO [insert name and E.I.N. of the corporation (or the corporations that compose a new loss subgroup) to which allocation is made]. The declaration must also include the following information, as appropriate—

(i) The date of the ownership change that resulted in the consolidated section 382 limitation (or subgroup section 382 limitation);

(ii) The amount of the consolidated section 382 limitation (or subgroup section 382 limitation) for the taxable year during which the former member (or new loss subgroup) ceases to be a member of the consolidated group (determined without regard to any apportionment under this section;

(iii) The amount of the value element and adjustment element of the consolidated section 382 limitation (or subgroup section 382 limitation) that is apportioned to the former member (or new loss subgroup) pursuant to paragraph (c) of this section; and

(iv) The name and E.I.N. of the common parent making the apportionment.

(2) *Signing of the election.* The election statement must be signed by both the common parent and the former member (or, in the case of a loss subgroup, the common parent and the loss subgroup parent) by persons authorized to sign their respective income tax returns.

(3) *Filing of the election.* The election statement must be filed by the common parent of the group that is apportioning the consolidated section 382 limitation (or the subgroup section 382 limitation) with its income tax return for the taxable year in which the former member (or new loss subgroup) ceases to be a member. The common parent must also deliver a copy of the statement to the former member (or the members of the new loss subgroup) on or before the day the group files its income tax return for the consolidated return year that the former member (or new loss subgroup) ceases to be a member. A copy of the statement must be attached to the first return of the former member (or the first return in which the members of a new loss subgroup join) that is filed after the close of the consolidated return year of the group of which the former member (or the members of a new loss subgroup) ceases to be a member.

(4) *Revocation of election.* An election statement made under paragraph (c) of this section is revocable only with the consent of the Commissioner.

[T.D. 8678, 61 FR 33355, June 27, 1996, as amended by T.D. 8823, 64 FR 36101, July 2, 1999. Redesignated and amended by T.D. 8824, 64 FR 36126, 36128, July 2, 1999]

§ 1.1502–96A Miscellaneous rules generally applicable for testing dates before June 25, 1999.

(a) *End of separate tracking of losses*—(1) *Application.* This paragraph (a) applies to a member (or a loss subgroup) with a net operating loss carryover that arose (or is treated under §1.1502–21(c) or 1.1502–21T(c) in effect prior to June 25, 1999, as contained in 26 CFR part 1 revised April 1, 1999, as applicable as arising) in a SRLY (or a net unrealized built-in gain or loss determined at the time that the member (or loss subgroup) becomes a member of the consolidated group if there is—

(i) An ownership change of the member (or loss subgroup in connection with, or after, becoming a member of the group; or

(ii) A period of 5 consecutive years following the day that the member (or loss subgroup) becomes a member of a group during which the member (or loss subgroup) has not had an ownership change.

(2) *Effect of end of separate tracking.* If this paragraph (a) applies with respect to a member (or loss subgroup), then, starting on the day after the earlier of the change date (but not earlier than the day the member (or loss subgroup) becomes a member of the consolidated group) or the last day of the 5 consecutive year period described in paragraph (a)(1)(ii) of this section, the member's net operating loss carryover that arose (or is treated under §1.1502–21(c) or 1.1502–21T(c) in effect prior to June 25, 1999, as contained in 26 CFR part 1 revised April 1, 1999, as applicable as arising) in a SRLY, is treated as described in §1.1502–91A(c)(1)(i). Also, the member's separately computed net unrealized built-in gain or loss is included in the determination whether the group has a net unrealized built-in gain or loss. The preceding sentences also apply for purposes of determining whether there is an ownership change with respect to such attributes following such change date (or earlier day) or 5 consecutive year period. Thus, for example, starting the day after the change date or the end of the 5 consecutive year period—

(i) The consolidated group which includes the new loss member or loss subgroup is no longer required to separately track owner shifts of the stock of the new loss member or loss subgroup parent to determine if an ownership change occurs with respect to the attributes of the new loss member or members included in the loss subgroup;

(ii) The group includes the member's attributes in determining whether it is a loss group under §1.1502–91A(c);

(iii) There is an ownership change with respect to such attributes only if the group is a loss group and has an ownership change; and

(iv) If the group has an ownership change, such attributes are pre-change consolidated attributes subject to the loss group's consolidated section 382 limitation.

(3) *Continuing effect of end of separate tracking.* As the context may require, a current group determines which of its members are included in a loss subgroup on any testing date by taking into account the application of this section in the former group. See the example in §1.1502–91A(f)(2).

(4) *Special rule for testing period.* For purposes of determining the beginning of the testing period for a loss group, the member's (or loss subgroup's) net operating loss carryovers (or net unrealized built-in gain or loss) described in paragraph (a)(2) of this section are considered to arise—

(i) In a case described in paragraph (a)(1)(i) of this section, in a taxable year that begins not earlier than the later of the day following the change date or the day that the member becomes a member of the group; and

(ii) in a case described in paragraph (a)(1)(ii) of this section, in a taxable year that begins 3 years before the end of the 5 consecutive year period.

(5) *Limits on effects of end of separate tracking.* The rule contained in this paragraph (a) applies solely for purposes of §§1.1502–91A through 1.1502–95A and this section (other than paragraph (b)(2)(ii)(B) of this section (relating to the definition of pre-change attributes of a subsidiary)) and §1.1502–98A, and not for purposes of other provisions of the consolidated return regulations, including, for example, §§1.1502–15 and 1.1502–21 (or §1.1502–15T in effect prior to June 25, 1999, as contained in 26 CFR part 1 revised April 1, 1999, and 1.1502–21T in effect prior to June 25, 1999, as contained in 26 CFR part 1 revised April 1, 1999, as applicable) (relating to the consolidated net operating loss deduction). See also paragraph (c) of this section for the continuing effect of an ownership change with respect to pre-change attributes.

(b) *Ownership change of subsidiary*—(1) *Ownership change of a subsidiary because of options or plan or arrangement.* Notwithstanding §1.1502–92A, a subsidiary may have an ownership change for purposes of section 382 with respect to its attributes which a group or loss subgroup includes in making a determination under §1.1502–91A(c)(1) (relating to the definition of loss group) or §1.1502–91A(d) (relating to the definition of loss subgroup). The subsidiary has such an

ownership change if it has an ownership change under the principles of §1.1502–95A(b) and section 382 and the regulations thereunder (determined on a separate entity basis by treating the subsidiary as not being a member of a consolidated group) in the event of—

(i) The deemed exercise under §1.382–4(d) of an option or options (other than an option with respect to stock of the common parent) held by a person (or persons acting pursuant to a plan or arrangement) to acquire more than 20 percent of the stock of the subsidiary; or

(ii) An increase by 1 or more 5-percent shareholders, acting pursuant to a plan or arrangement to avoid an ownership change of a subsidiary, in their percentage ownership interest in the subsidiary by more than 50 percentage points during the testing period of the subsidiary through the acquisition (or deemed acquisition pursuant to §1.382–4(d)) of ownership interests in the subsidiary and in higher-tier members with respect to the subsidiary.

(2) *Effect of the ownership change*—(i) *In general*. If a subsidiary has an ownership change under paragraph (b)(1) of this section, the amount of consolidated taxable income for any post-change year that may be offset by the pre-change losses of the subsidiary shall not exceed the section 382 limitation for the subsidiary. For purposes of this limitation, the value of the subsidiary is determined solely by reference to the value of the subsidiary's stock.

(ii) *Pre-change losses*. The pre-change losses of a subsidiary are—

(A) Its allocable part of any consolidated net operating loss which is attributable to it under §1.1502–21(b) or 1.1502–21T(b) in effect prior to June 25, 1999, as contained in 26 CFR part 1 revised April 1, 1999, as applicable (determined on the last day of the consolidated return year that includes the change date) that is not carried back and absorbed in a taxable year prior to the year including the change date;

(B) Its net operating loss carryovers that arose (or are treated under §1.1502–21(c) or 1.1502–21T(c) in effect prior to June 25, 1999, as contained in 26 CFR part 1 revised April 1, 1999, as applicable as having arisen) in a SRLY; and

(C) Its recognized built-in loss with respect to its separately computed net unrealized built-in loss, if any, determined on the change date.

(3) *Coordination with §§1.1502–91A, 1.1502–92A, and 1.1502–94A*. If an increase in percentage ownership interest causes an ownership change with respect to an attribute under this paragraph (b) and under §1.1502–92A on the same day, the ownership change is considered to occur only under §1.1502–92A and not under this paragraph (b). See §1.1502–94A for anti-duplication rules relating to value.

(4) *Example*. The following example illustrates paragraph (b)(1)(ii) of this section.

Example. Plan to avoid an ownership change of a subsidiary. (a) L owns all the stock of L1, L1 owns all the stock of L2, L2 owns all the stock of L3, and L3 owns all the stock of L4. The L group has a consolidated net operating loss arising in Year 1 that is carried over to Year 2. L has assets other than its L1 stock with a value of $900. L1, L2, and L3 own no assets other than their L2, L3, and L4 stock. L4 has assets with a value of $100. During Year 2, A, B, C, and D, acting pursuant to a plan to avoid an ownership change of L4, acquire the following ownership interests in the members of the L loss group: (A) on September 11, Year 2, A acquires 20 percent of the L1 stock from L and B acquires 20 percent of the L2 stock from L1; and (B) on September 20, Year 2, C acquires 20 percent of the stock of L3 from L2 and D acquires 20 percent of the stock of L4 from L3. The following is a graphic illustration of these facts:

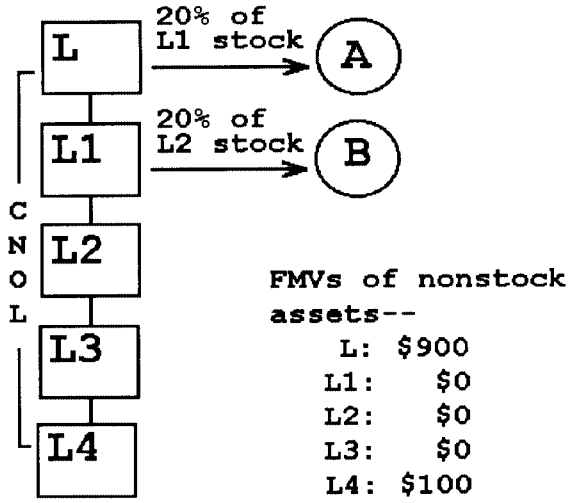

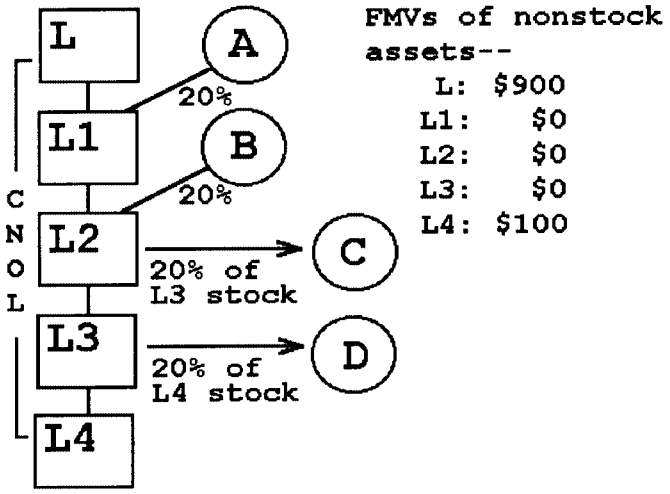

(b) The acquisitions by A, B, C, and D pursuant to the plan have increased their respective percentage ownership interests in L4 by approximately 10, 13, 16, and 20 percentage points, for a total of approximately 59 percentage points during the testing period. This more than 50 percentage point increase in the percentage ownership interest in L4 causes an ownership change of L4 under paragraph (b)(2) of this section.

(c) *Continuing effect of an ownership change.* A loss corporation (or loss subgroup) that is subject to a limitation under section 382 with respect to its

pre-change losses continues to be subject to the limitation regardless of whether it becomes a member or ceases to be a member of a consolidated group. See §1.382–5(d) (relating to successive ownership changes and absorption of a section 382 limitation).

[T.D. 8678, 61 FR 33362, June 27, 1996; T.D. 8823, 64 FR 36101, July 2, 1999. Redesignated and amended at T.D. 8824, 64 FR 36126, 36128, July 2, 1999]

§ 1.1502–97A Special rules under section 382 for members under the jurisdiction of a court in a title 11 or similar case. [Reserved]

[T.D. 8678, 61 FR 33364, June 27, 1996. Redesignated by T.D. 8824, 64 FR 36128, July 2, 1999]

§ 1.1502–98A Coordination with section 383 generally applicable for testing dates (or members joining or leaving a group) before June 25, 1999.

The rules contained in §§1.1502–91A through 1.1502–96A also apply for purposes of section 383, with appropriate adjustments to reflect that section 383 applies to credits and net capital losses. Similarly, in the case of net capital losses, general business credits, and excess foreign taxes that are pre-change attributes, §1.383–1 applies the principles of §§1.1502–91A through 1.1502–96A. For example, if a loss group has an ownership change under §1.1502–92A and has a carryover of unused general business credits from a pre-change consolidated return year to a post-change consolidated return year, the amount of the group's regular tax liability for the post-change year that can be offset by the carryover cannot exceed the consolidated section 383 credit limitation for that post-change year, determined by applying the principles of §§1.383–1(c)(6) and 1.1502–93A (relating to the computation of the consolidated section 382 limitation).

[T.D. 8678, 61 FR 33364, June 27, 1996. Redesignated and amended by T.D. 8824, 64 FR 36126, 36128, July 2, 1999]

§ 1.1502–99A Effective dates.

(a) *Effective date*—(1) *In general.* Except as provided in §1.1502–99(b), §§1.1502–91A through 1.1502–96A and 1.1502–98A apply to any testing date on or after January 1, 1997, and before June 25, 1999. Sections 1.1502–94A through 1.1502–96A also apply on any date on or after January 1, 1997, and before June 25, 1999, on which a corporation becomes a member of a group or on which a corporation ceases to be a member of a loss group (or a loss subgroup).

(2) *Anti-duplication rules for recognized built-in gain.* Section 1.1502–93(c)(2) (relating to recognized built-in gain of a loss group or loss subgroup) applies to taxable years for which the due date for income tax returns (without extensions) is after June 25, 1999,

(b) *Testing period may include a period beginning before January 1, 1997.* A testing period for purposes of §§1.1502–91A through 1.1502–96A and 1.1502–98A may include a period beginning before January 1, 1997. Thus, for example, in applying §1.1502–92A(b)(1)(i) (relating to the determination of an ownership change of a loss group), the determination of the lowest percentage ownership interest of any 5-percent shareholder of the common parent during a testing period ending on a testing date occurring on or after January 1, 1997, takes into account the period beginning before January 1, 1997, except to the extent that the period is more than 3 years before the testing date or is otherwise before the beginning of the testing period. See §1.1502–92A(b)(1).

(c) *Transition rules*—(1) *Methods permitted*—(i) *In general.* For the period ending before January 1, 1997, a consolidated group is permitted to use any method described in paragraph (c)(2) of this section which is consistently applied to determine if an ownership change occurred with respect to a consolidated net operating loss, a net operating loss carryover (including net operating loss carryovers arising in SRLYs), or a net unrealized built-in loss. If an ownership change occurred during that period, the group is also permitted to use any method described in paragraph (c)(2) of this section which is consistently applied to compute the amount of the section 382 limitation that applies to limit the use of taxable income in any post-change year ending before, on, or after January 1, 1997. The preceding sentence does not preclude the imposition of an additional, lesser limitation due to a subsequent ownership change nor, except as

provided in paragraph (c)(1)(iii) of this section, does it permit the beginning of a new testing period for the loss group.

(ii) *Adjustments to offset excess limitation*. If an ownership change occurred during the period ending before January 1, 1997, and a method described in paragraph (c)(2) of this section was not used for a post-change year, the members (or group) must reduce the section 382 limitation for post-change years for which an income tax return is filed after January 1, 1997, to offset, as quickly as possible, the effects of any section 382 limitation that members took into account in excess of the amount that would have been allowable under §§ 1.1502–91A through 1.1502–96A and 1.1502–98A.

(iii) *Coordination with effective date*. Notwithstanding that a group may have used a method described in paragraph (c)(2)(ii) or (iii) of this section for the period before January 1, 1997, §§ 1.1502–91A through 1.1502–96A and 1.1502–98A apply to any testing date occurring on or after January 1, 1997, for purposes of determining whether there is an ownership change with respect to any losses and, if so, the collateral consequences. Any ownership change of a member other than the common parent pursuant to a method described in paragraph (c)(2)(ii) or (iii) of this section does not cause a new testing period of the loss group to begin for purposes of applying § 1.1502–92A on or after January 1, 1997.

(2) *Permitted methods*. The methods described in this paragraph (c)(2) are:

(i) A method that does not materially differ from the rules in §§ 1.1502–91A through 1.1502–96A and 1.1502–98A (other than those in § 1.1502–95A(c) and (b)(2)(ii) (relating to the apportionment of a section 382 limitation) as they would apply to a corporation that ceases to be a member of the group before January 1, 1997). As the context requires, the method must treat references to rules in current regulations as references to rules in regulations generally effective for taxable years before January 1, 1997. Thus, for example, the taxpayer must treat a reference to § 1.382–4(d) (relating to options) as a reference to § 1.382–2T(h)(4) for any testing date to which § 1.382–2T(h)(4) applies. Similarly, a reference to § 1.1502–21(c) or 1.1502–21T(c) in effect prior to June 25, 1999, as contained in 26 CFR part 1 revised April 1, 1999, as applicable may be a reference to § 1.1502–21A(c), as appropriate. Furthermore, the method must treat all corporations that were affiliated on January 1, 1987, and continuously thereafter as having met the 5 consecutive year requirement of § 1.1502–91A(d)(2)(i) on any day before January 1, 1992, on which the determination of net unrealized built-in gain or loss of a loss subgroup is made;

(ii) A reasonable application of the rules in section 382 and the regulations thereunder applied to each member on a separate entity basis, treating each member's allocable part of a consolidated net operating loss which is attributable to it under § 1.1502–21(b) or 1.1502–21T(b) in effect prior to June 25, 1999, as contained in 26 CFR part 1 revised April 1, 1999, as applicable as a net operating loss of that member and applying rules similar to § 1.382–8 to avoid duplication of value in computing the section 382 limitation for the member (see § 1.382–8(h) (relating to the effective date and transition rules regarding controlled groups)); or

(iii) A method approved by the Commissioner upon application by the common parent.

(d) *Amended returns*. A group may file an amended return in connection with an ownership change occurring before January 1, 1997, to modify the amount of a section 382 limitation with respect to a consolidated net operating loss, a net operating loss carryover (including net operating loss carryovers arising in SRLYs), or a recognized built-in loss (or gain) only if it files amended returns:

(1) For the earliest taxable year ending after December 31, 1986, in which it had an ownership change, if any, under § 1.1502–92A;

(2) For all subsequent taxable years for which returns have already been filed as of the date of the amended return;

(3) The modification with respect to all members for all taxable years ending in 1987 and thereafter complies with §§ 1.1502–91A through 1.1502–96A and 1.1502–98A; and

(4) The amended return(s) permitted by the applicable statute of limitations is/are filed before March 26, 1997.

(e) *Section 383.* This section also applies for the purposes of section 383, with appropriate adjustments to reflect that section 383 applies to credits and net capital losses.

[T.D. 8678, 61 FR 33364, June 27, 1996, as amended by T.D. 8823, July 2, 1999. Redesignated and amended by T.D. 8824, 64 FR 36126–36128, July 2, 1999]

DUAL CONSOLIDATED LOSSES INCURRED IN TAXABLE YEARS BEGINNING BEFORE OCTOBER 1, 1992

§ 1.1503–2A Dual consolidated loss.

(a) *In general.* This section applies for purposes of determining whether and to what extent the net operating loss of a dual resident corporation incurred in tax years beginning after December 31, 1986, shall be allowed to reduce the taxable income of any other member of the affiliated group. Except as provided in paragraph (c) of this section, any dual consolidated loss of a domestic corporation incurred in taxable years beginning after December 31, 1986, cannot reduce the taxable income of any affiliate of such domestic corporation for that or any other taxable year, regardless of whether those losses offset income of another corporation under the income tax laws of the foreign country and regardless of whether any of the income of any corporation that the loss may reduce in the foreign country is, has been, or will be subject to tax in the United States. This rule shall also apply to preclude the use of a dual consolidated loss to offset any income of an affiliate (whether or not an election to file a consolidated return has been made) by means of a transaction subject to section 381 of the Code. For purposes of the preceding sentence, an ''affiliate'' means any member of the affiliated group as determined under section 1504(a) without regard to the exceptions contained in section 1504(b) (other than section 1504(b)(3)) relating to includible corporations. Further, this rule shall also apply to preclude the use of a dual consolidated loss of a separate unit by a domestic corporation upon or as a result of the termination, liquidation, or sale of the separate unit. The following example illustrates the application of this paragraph (a).

Example. P, a domestic corporation, owns all of the outstanding stock of DRC, a domestic corporation. DRC is managed and controlled in Country W, a country which determines the tax residence of corporations according to place of management and control. Therefore, the income of DRC is subject to tax in both the United States and in Country W. There are currently no other corporations in Country W which could use the losses of DRC to offset income under the income tax laws of Country W. P no longer wishes to operate DRC as a separate corporation. Therefore DRC will be liquidated into P under section 332 of the Code. Normally, P, under section 381, would succeed to and take into account DRC's net operating loss carryovers. However, this paragraph (a) prohibits the net operating loss of DRC from reducing P's income (including income of P generated by assets previously held by DRC) for U.S. tax purposes. Therefore, DRC's net operating loss carryovers will not be available to offset P's income unless one of the exceptions described in paragraph (c) of this section applies.

(b) *Definitions.* The following definitions apply for purposes of this section.

(1) *Domestic corporation.* For purposes of this section, the term ''domestic corporation'' has the meaning assigned to it by sections 7701 (a)(3) and (a)(4) and shall also include any corporation treated as a domestic corporation by the Internal Revenue Code, including, but not limited to, section 269B and section 1504(d). Subject to the rules of paragraph (d) of this section, any separate unit (as defined in paragraph (b)(4) of this section) of a domestic corporation will be treated as a separate domestic corporation (and as a dual resident corporation) for purposes of this section. The following example illustrates the application of this paragraph (b)(1).

Example. A is a domestic corporation with a branch operation in Country X. A is owned by FP, a Country X corporation. Country X allows the Country X branch income and losses of A to be used to offset FP's losses or income. Under paragraph (d) of this section, the branch operations of A in Country X will be treated as a separate domestic corporation and as a dual resident corporation for purposes of this section. See paragraph (d) of this section for the treatment of any dual

consolidated loss of the branch operations of A.

(2) *Dual consolidated loss.* The term ''dual consolidated loss'' means the net operating loss (as defined in section 172(c) and the regulations thereunder) of a domestic corporation incurred in a year in which the corporation is a dual resident corporation. The fact that a particular item taken into account in computing such net operating loss deduction is not taken into account in computing income subject to income tax in a foreign country shall not cause such item to be excluded from the calculation of the dual consolidated loss. A dual consolidated loss shall arise even though no other person, corporation, or entity is permitted, under the income tax laws of the foreign country, to use by any means the losses, expenses or deductions of the dual resident corporation to offset income. A dual consolidated loss shall not include—

(i) The net operating loss incurred during that portion of the taxable year prior to the date on which the domestic corporation becomes a dual resident corporation or subsequent to the date on which the domestic corporation ceases to be a dual resident corporation. For purposes of determining the amount of the net operating loss incurred in that portion of the taxable year prior to the date on which the domestic corporation becomes a dual resident corporation or subsequent to the date on which the domestic corporation ceases to be a dual resident corporation, in no event shall more than a pro rata portion of the net operating loss commensurate with the portion of the taxable year during which the domestic corporation was not a dual resident corporation be allocated to that portion of the taxable year in which the domestic corporation was not a dual resident corporation; or

(ii) Losses incurred in taxable years beginning on or before December 31, 1986.

(3) *Dual resident corporation.* For purposes of this section, a domestic corporation shall be a dual resident corporation if the worldwide income of such corporation is subject to the income tax of a foreign country, or such corporation is subject to the income tax of a foreign country on a residence basis (and not on a source basis).

(4) *Separate unit.* Solely for purposes of this section, the term ''separate unit'' shall mean any of the following:

(i) A foreign branch as defined in § 1.367 (a)–6T(g);

(ii) A partnership interest; or

(iii) A trust interest.

(5) *Subject to tax.* For purposes of determining whether a domestic corporation is subject to the income tax of a foreign country on its income, the fact that the corporation has no actual tax liability to the foreign country for a particular taxable year shall not be taken into consideration.

(c) *Exceptions*—(1) *No ability to use dual consolidated loss under foreign law*—(i) *In general.* Paragraph (a) of this section shall not apply to a dual consolidated loss if—

(A) At no time after December 31, 1986, has there been any other person, corporation, or entity which, under the income tax laws of the foreign country, is permitted to use by any means the losses, expenses, or deductions of the dual resident corporation to offset income; and

(B) Under the income tax laws of the foreign country, the losses, expenses, or deductions of the dual resident corporation incurred in taxable years beginning after December 31, 1986, cannot be carried over or back to be used, by any means, to offset the income of any other person, corporation, or entity in other years.

(ii) *Limitations.* For purposes of paragraph (c)(1)(i) of this section, none of the following circumstances shall constitute a satisfaction of paragraph (c)(1)(i)(A) of this section—

(A) The failure to make use of an election (including, but not limited to, the ability to surrender losses, expenses or deductions) that would enable another person, corporation, or entity to use the losses, expenses, or deductions of the dual resident corporation to offset income under the income tax laws of the foreign country;

(B) The fact that the income tax laws of the foreign country deny the use of losses, expenses, or deductions of its

corporate residents that are also residents for tax purposes of another country to offset income of another person, corporation, or entity;

(C) The fact that the other person, corporation, or entity does not have sufficient income to benefit from an offset permitted under the income tax laws of the foreign country for a particular taxable year; or

(D) The fact that the dual resident corporation has no losses, expenses, or deductions during a particular taxable year.

(iii) *Examples*. The following examples illustrate this paragraph (c)(1).

Example (1). DRC, a domestic corporation, is also subject to tax in Country Y on its worldwide income. DRC has been filing a consolidated return for U.S. income tax purposes with DP, its domestic parent. DRC has also been able to use its losses to offset income of its affiliates in Country Y by using Country Y's form of consolidation. In order to prevent companies like DRC from taking losses against income of affiliates under Country Y law and then again using the losses of DRC to offset income of affiliates for U.S. tax purposes. Country Y law prevents a company which is also subject to tax on its worldwide income in another country, or is subject to tax on a residence basis in another country, from using the Country Y form of consolidation. DRC is a dual resident corporation as defined in paragraph (b)(3) of this section. DRC's losses are dual consolidated losses as defined in paragraph (b)(2) of this section which under paragraph (a) of this section may not be used to offset income of any other U.S. affiliate of DRC. The Country Y statute does not cause the exception provided by this paragraph (c)(1) to apply.

Example (2). P, a domestic corporation, owns DRC, a domestic corporation which is also subject to the income tax laws of Country Z on a residence basis, and FS, a Country Z corporation. Under Country Z laws, income or losses of DRC may not be consolidated with income or losses of P or FS. There is, however, a provision under Country Z's law by which DRC's unused losses could be carried forward, acquired, and used by FS if DRC is merged into FS. DRC's dual consolidated loss does not qualify for the exception from application of paragraph (a) provided by this paragraph (c)(1) because of the loss carryforward provisions under Country Z's income tax laws. However, DRC may qualify for an exemption from paragraph (a) of this section under the provisions of paragraph (c)(3) of this section.

Example (3). DRC is a dual resident corporation subject to tax on a residence basis in foreign country Y. Under the income tax laws of Y, DRC could elect to use its losses to offset the income of foreign entity FE on a Country Y consolidated income tax return for the taxable year ending December 31, 1987. Regardless of whether such election is made, DRC fails to satisfy the requirement of paragraph (c)(1)(i)(A) of this section.

Example (4). The same facts apply as in *Example* (3), except that Country Y changes its income tax law, effective as of January 1, 1987, to prevent the consolidation of losses by dual resident corporations. Under paragraph (c)(1)(ii)(B) of this section, the fact that this Country Y legislation prevents DRC from using its losses to offset the income of FE is disregarded and DRC fails to satisfy the requirement of paragraph (c)(1)(i)(A) of this section.

Example (5). The same facts apply as in *Example* (4), except that FE has no taxable income in taxable years 1987 through 1989. Moreover, DRC is profitable throughout this period and consequently has no losses which it could share with FE. Under paragraphs (c)(1)(ii) (C) and (D) of this section, the fact that FE would not receive a tax benefit from consolidation with DRC on a Country Y return is disregarded and DRC fails to satisfy the requirement of paragraph (c)(1)(i)(A) of this section. Because DRC does not have a net operating loss during 1987 through 1989, section 1503(d) does not affect the consolidation of DRC on a U.S. return for these years. However, DRC's failure to satisfy paragraph (c)(1)(i)(A) of this section at all times after December 31, 1986 will make it ineligible for the exception described in paragraph (c)(1) of this section with respect to any future taxable year in which it incurs a net operating loss.

Example (6). The same facts apply as in *Example* (5). In 1990, FE is transferred and is no longer eligible for consolidation on a Country Y return. There are no other entities with which DRC could consolidate under the income tax laws of Y. Nevertheless, since FE and DRC could have consolidated on a Country Y return during the period after December 31, 1986 and before the transfer of FE, DRC fails to satisfy the requirement of paragraph (c)(1)(i)(A) of this section in 1990 and in all future taxable years.

(2) *Elective agreement in place between United States and the foreign country*. Paragraph (a) of this section shall not apply to a dual consolidated loss to the extent such loss is subject to an election by the dual resident corporation to deduct the loss in the United States pursuant to an agreement entered into between the United States and the foreign country which puts into place an elective procedure through which losses would offset income in only one country.

(3) *Agreement to amend returns upon later use of losses, expenses, or deductions of a dual resident corporation*—(i) *In general.* Notwithstanding that, under the income tax laws of the foreign country, the losses, expenses, or deductions of the dual resident corporation can be carried over or back to offset, by some means, the income of any other person, corporation, or entity in other taxable years, paragraph (a) of this section shall not apply to a dual consolidated loss of that dual resident corporation if the requirements described in this paragraph (c)(3)(i) are satisfied.

(A) At no time after December 31, 1986, has there been any other person, corporation, or entity which, under the income tax laws of the foreign country, is permitted to use by any means the losses, expenses, or deductions of the dual resident corporation to offset income. For purposes of the preceding sentence, none of the circumstances described in paragraphs (c)(1)(ii) (A) through (D) of this section shall constitute a satisfaction of this paragraph (c)(3)(i)(A).

(B) The affiliated group or, if there is no affiliated group filing a consolidated return, the dual resident corporation which incurs the loss, files with its U.S. tax return for the taxable year in which the dual consolidated loss arises a binding agreement described in paragraphs (c)(3) (ii) and (iii) of this section. The agreement must be filed under this paragraph (c)(3) even if the only effect of the dual consolidated loss is to increase a net operating loss for U.S. tax purposes.

(ii) *Description of agreement.* Except as otherwise provided in paragraph (c)(3)(viii) of this section, the agreement described in this paragraph (c)(3)(ii) must be attached to, and filed by the due date (including extensions) of, the tax return of the affiliated group or dual resident corporation for the taxable year in which the dual consolidated loss arises. The agreement must be signed under penalties of perjury by the person who signs the tax return of the group or dual resident corporation. The agreement must include the following items, in paragraphs labeled to correspond with the subdivisions set forth below:

(A) The name, address, identifying number, and place and date of incorporation of the dual resident corporation and the country or countries which tax the dual resident corporation on a residence basis or which tax the worldwide income of the dual resident corporation;

(B) A statement that the document submitted constitutes the agreement of the affiliated group or dual resident corporation in accordance with the requirements of § 1.1503–2T(c)(3);

(C) A statement of the amount of the dual consolidated loss to be covered by the agreement and the year in which it arose;

(D) The agreement of the group or dual resident corporation to amend returns, as described in paragraph (c)(3)(iii) of this section;

(E) A waiver of the period of limitations, as described in paragraph (c)(3)(iv) of this section; and

(F) An agreement to file with the tax returns of the group or dual resident corporation for each of the fifteen years following the year the dual consolidated loss arose a waiver of the period of limitation, as described in paragrapah (c)(3)(iv) of this section, and a certification as described in paragraph (c)(3)(v) of this section.

(iii) *Terms of agreement.* The affiliated group or dual resident corporation must agree that if there is a ''triggering event'' described in this paragraph (c)(3)(iii), then, the affiliated group filing a consolidated return, or if there is no affiliated group filing a consolidated return, the dual resident corporation, shall, within 90 days after the date of occurrence of the triggering event, file an amended U.S. income tax return for the taxable year in which the dual consolidated loss arose reporting the dual consolidated loss on the amended return as a loss to which paragraph (a) of this section applies. An amended U.S. income tax return must also be filed for any other taxable year in which the tax liability increases as a result of such applications of paragraph (a) of this section. In addition, upon examination, the group or dual resident corporation must provide to the District Director a schedule of the amended carryforward and carryback losses and credits for each of

the group's or dual resident corporation's taxable years for which no amended return is required to be filed pursuant to this paragraph (c)(3)(iii). For purposes of section 6601, the last date prescribed for payment of the additional amount of tax shown on an amended return filed pursuant to this paragraph (c)(3)(iii) shall be the same date as the date prescribed for the payment of tax for the taxable year with respect to which the amended return is filed. Any of the following events shall constitute a ''triggering event'' for purposes of this section—

(A) There is a failure for any taxable year to file the annual waiver or certification described in paragraphs (c)(3)(iv) and (v) of this section.

(B) Prior to the close of the fifteenth taxable year following the taxable year in which the dual consolidated loss arose, any of the following events—

(*1*) There is a failure to satisfy both the requirement of paragraph (c)(3)(i)(A) of this section and the requirements of paragraph (c)(4) of this section;

(*2*) Where the agreement is made by an affiliated group filing a consolidated return, the dual resident corporation (or its successor-in-interest) ceases to be a member of the affiliated group;

(*3*) Where the agreement is made by a dual resident corporation that is not a member of an affiliated group filing a consolidated return, the dual resident corporation is no longer in existence; or

(*4*) Where the dual resident corporation is a separate unit of a domestic corporation, the domestic corporation sells or transfers the dual resident corporation.

(iv) *Waiver of period of limitation*. The affiliated group or the dual resident corporation (or the successor-in-interest of such group or dual resident corporation) must file, with the agreement to amend returns and with the tax return for each of the fifteen taxable years following the taxable year in which the dual consolidated loss arose, a waiver of the limitation on assessment of any tax resulting from the amendment of any return as described in paragraph (c)(3)(iii) of this section. The waiver shall extend the period for assessment of such tax to a date not earlier than three years after the return is filed for the fifteenth taxable year following the taxable year in which the dual consolidated loss arose. The waiver shall also contain such other terms with respect to assessment as may be considered by the Commissioner to be necessary to insure the assessment and collection of the correct tax liability for each year for which the waiver is required. The waiver must be signed by a person authorized to sign the agreement described in paragraph (c)(3)(ii) of this section. A failure, at any time, to comply with the requirements of this paragraph (c)(3) or with the terms of any agreement filed pursuant to this paragraph (c)(3) shall extend the period of assessment of such tax until three years after the date on which the Internal Revenue Service receives actual notice of the use of or of the ability to use the losses, expenses, or deductions of the dual resident corporation to offset the income of another person, corporation, or entity under the income tax laws of the foreign country.

(v) *Annual certification*. The affiliated group or the dual resident corporation (or the successor-in-interest of such group or dual resident corporation) must file with its income tax return for each of the fifteen taxable years following the taxable year in which the dual consolidated loss arose a certification that the losses, expenses, or deductions of the dual resident corporation were not used or permitted to be used to offset the income of another person, corporation, or entity under the income tax laws of a foreign country. The annual certification pursuant to this paragraph (c)(3)(v) must be signed under penalties of perjury by a person authorized to sign the agreement described in paragraph (c)(3)(ii) of this section. The certification must identify the dual consolidated loss with respect to which it is given by setting forth the taxpayer's year in which the loss arose and the amount of such loss and must warrant that arrangements have been made to insure that the group or dual resident corporation will be informed of any subsequent use of or ability to use the losses, expenses, or

deductions of the dual resident corporation to offset the income of another person, corporation, or entity under the income tax laws of the foreign country. If dual consolidated losses of more than one taxable year are subject to the rules of this paragraph (c)(3), the certifications for those years may be combined in a single document, but each dual consolidated loss must be separately identified.

(vi) *Special rules for a succeeding group or a successor-in-interest*—(A) *Ceasing to be a member of the affiliated group.* For purposes of this paragraph (c)(3), and except as otherwise provided in this paragraph (c)(3)(vi), a dual resident corporation shall be deemed to have ceased to be a member of the affiliated group that filed the agreement described in paragraph (c)(3)(ii) of this section if it is no longer a member of that group, as defined in § 1.1502–1(b), or if the group ceases to exist because the common parent is no longer in existence or is no longer a common parent or the group no longer files on the basis of a consolidated return. However, the obligation to file an amended return pursuant to the agreement described in paragraph (c)(3)(ii) of this section shall not apply and the dual resident corporation shall not be deemed to have ceased to be a member of the group for purposes of this paragraph (c)(3) where the dual resident corporation ceases to be a member of the group solely by reason of an acquisition of its assets by a member of the group in a transaction to which section 381(a) applies provided the successor-in-interest of the dual resident corporation continues to be a member of the group.

(B) *Special rules for a succeeding group.* The obligation to file an amended return pursuant to the agreement described in paragraph (c)(3)(ii) of this section shall not apply where the dual resident corporation becomes a member of a succeeding group as a result of an acquisition described in § 1.1502–13(f)(2)(i) (*a*) or (*b*) (relating generally to the acquisition of assets of, by, or from a member of the affiliated group in a tax-free reorganization) and the succeeding group attaches to, and files with, its timely filed (including extensions) tax return for the taxable year in which the acquisition takes place a binding agreement—

(*1*) Which sets forth the same terms as are described in paragraph (c)(3)(ii) of this section,

(*2*) In which the group agrees to be bound by the terms of the agreement previously filed by the terminating group, and

(*3*) In which the group agrees to all the terms set forth in paragraph (c)(3)(iii) of this section.

The agreement must be signed under penalties of perjury by the person who signs the tax return of the succeeding group.

(C) *Special rules for a successor-in-interest.* In the case of a dual resident corporation that was not a member of an affiliated group filing a consolidated return in the taxable year in which the dual consolidated loss arose and that filed an agreement described in paragraph (c)(3)(ii) of this section, the assets of which are acquired in a transaction described in section 381(a), such corporation shall not be required to file an amended return pursuant to paragraph (c)(3)(iii)(B)(*3*) of this section provided its successor-in-interest attaches a binding agreement to its timely filed (including extensions) tax return for the taxable year in which the acquisition takes place. The agreement must be signed under penalties of perjury by the person who signs the tax return of the successor-in-interest. The agreement must:

(*1*) Set forth the same terms as are described in paragraph (c)(3)(ii) of this section,

(*2*) State the agreement of the successor-in-interest to be bound by the terms of the agreement previously filed by the dual resident corporation, and

(*3*) State the agreement of the successor-in-interest to all the terms set forth in paragraph (c)(3)(iii) of this section.

(vii) *Definitions.* For purposes of this section—

(A) The terms *succeeding group* and *terminating group* shall have the same meaning as in § 1.1502.13(f)(2)(i); and

(B) The term *successor-in-interest* shall mean an acquiring corporation that succeeds to the tax attributes of

an acquired corporation under the provisions of section 381 by reason of a transaction described in section 381(a).

(viii) *Transition rules.* An affiliated group or a dual resident corporation (or a succeeding group or a successor-in-interest of a dual resident corporation) that meets the eligibility requirements described in paragraph (c)(3)(ix) of this section will be permitted to apply the transition rules in this paragraph (c)(3)(viii) for taxable years ending before December 31, 1989.

(A) The agreement in satisfaction of paragraph (c)(3) (ii) or (vi) of this section may be attached to the timely filed (including extensions) tax return of the affiliated group or of the dual resident corporation (or the succeeding group or the successor-in-interest of such dual resident corporation) for the first taxable year which ends on or after December 31, 1989. The agreement required for each of the taxable years ending before December 31, 1989 and for the first taxable year ending on or after December 31, 1989 may be combined on a single document.

(B) The requirement of paragraphs (c)(3)(iv) and (c)(3)(v) of this section regarding the filing of an annual waiver of the period of limitation and certification shall be satisfied for the taxable years ending before December 31, 1989, and no failure to file shall be deemed to have occurred with respect to such taxable years for purposes of paragraph (c)(3)(iii)(A) of this section if the waivers and certifications required under paragraphs (c)(3)(iv) and (c)(3)(v) of this section are filed with the tax return for the first taxable year ending on or after December 31, 1989.

(ix) *Eligibility for transition rules.* The rules in paragraph (c)(3)(viii) of this section shall apply only if, as of the date of the agreement in satisfaction of paragraph (c)(3) (ii) or (vi) of this section and filed pursuant to paragraph (c)(3)(viii) of this section, none of the triggering events described in paragraph (c)(3)(iii)(B) of this section has occurred.

(4) *No ability to use dual consolidated loss under foreign law after restructuring*—(i) *In general.* Notwithstanding that a dual resident corporation fails to satisfy either paragraph (c)(1)(i)(A) or (c)(3)(i)(A) of this section, paragraph (a) of this section shall not apply to any dual consolidated loss (or portion of a dual consolidated loss) described in paragraph (c)(4)(iii) of this section provided the requirements of either paragraph (c)(1)(i)(B) or (c)(3)(i)(B) of this section are satisfied and a restructuring that meets the requirements of paragraph (c)(4)(ii) of this section has been completed.

(ii) *Qualified restructuring.* A restructuring meets the requirements of this paragraph (c)(4)(ii) if it is completed on or before December 31, 1989, in the foreign country so that at all times from the date of such restructuring to the close of the taxable year in which the dual consolidated loss arises, there is no other person, corporation, or entity which, under the income tax laws of the foreign country, is permitted to use by any means the losses, expenses, or deductions of the dual resident corporation to offset income. For purposes of the preceding sentence, none of the circumstances described in paragraphs (c)(1)(ii) (A) through (D) of this section shall constitute a satisfaction of this paragraph (c)(4)(ii).

(iii) *Qualified losses.* Losses to which paragraph (c)(4)(i) of this section applies are the dual consolidated losses of a dual resident corporation that arise in a taxable year beginning after the restructuring described in paragraph (c)(4)(ii) of this section (or the portion of any dual consolidated loss that arises during that portion of the taxable year following the restructuring described in paragraph (c)(4)(ii) of this section). For purposes of determining the amount of the dual consolidated loss which arises in that portion of the taxable year following the restructuring, in no event shall more than a pro rata portion of the dual consolidated loss commensurate with the portion of the taxable year beginning with the date of completion of the restructuring and ending on the last day of that same taxable year be allocated to that portion of the taxable year following the restructuring.

(d) *Special rule for separate units*—(1) *Separate units characterized as corporations under foreign law.* If a separate unit of a domestic corporation consists of an interest in an entity (including a

foreign branch) that for U.S. tax purposes is not taxable as an association, but the entity is subject to income tax in a foreign jurisdiction as a corporation either on its worldwide income or on a residence basis (and not on a source basis), then for purposes of this section such separate unit of the domestic corporation will be treated as if it were a dual resident corporation and a wholly-owned domestic subsidiary of the domestic corporation. For purposes of paragraphs (c) (3) and (4) of this section, any agreement, waiver and certification required to be filed with respect to such dual resident corporation shall be filed with the federal income tax return of the domestic corporation owning the separate unit or by the affiliated group with which the domestic corporation files a consolidated return.

(2) *Other separate units.* Except as provided in paragraph (d)(3) of this section, if a separate unit of a domestic corporation (other than a separate unit described in paragraph (d)(1) of this section) is permitted under the income tax laws of a foreign country—

(i) To use its losses, expenses, or deductions to offset the income of any other person, corporation, or entity in the taxable year in which the dual consolidated loss arises; or

(ii) To carry over or back its losses, expenses, or deductions so that they may offset the income of any other person, corporation, or entity in other years, then such separate unit will be treated for purposes of this section as if it were a dual resident corporation and a wholly-owned domestic subsidiary of the domestic corporation. For purposes of the preceding sentence, none of the circumstances described in paragraphs (c)(1)(ii) (A) through (D) of this section shall preclude a separate unit from being treated as a dual resident corporation and a separate domestic corporation under this paragraph (d)(2). This paragraph (d)(2) applies regardless of whether the domestic corporation is a member of an affiliated group, and, if it is, regardless of whether the group files a consolidated return.

(3) *Certification.* Paragraph (d)(2) of this section shall not apply with respect to any taxable year for which the domestic corporation owning the separate unit (or the affiliated group of which the domestic corporation is a member) files a certification as described in this paragraph (d)(3). The certification must be attached to, and filed by the due date (including extensions) of, the federal income tax return of the domestic corporation owning the separate unit (or the affiliated group with which the domestic corporation files a consolidated return) for the taxable year to which it applies. With respect to returns filed without an attached certification for taxable years ending before December 31, 1989, the certification in satisfaction of this paragraph (d)(3) may be attached to the return for the first taxable year ending on or after December 31, 1989. The certification must be signed under penalties of perjury by the person who signs the return. The certification must include the following items, in paragraphs labeled to correspond with the subdivisions set forth below:

(i) A statement that the document submitted constitutes the certification required under the provisions of § 1.1503–2T(d)(3);

(ii) Identification of the separate unit, including the name under which it conducts business and its principal activity;

(iii) Identification of the total losses, expenses, and deductions incurred by the separate unit and included on the tax return for the taxable year;

(iv) Certification that no portion of the separate unit's losses, expenses or deductions identified above has been or will be used to offset the income of any other person, corporation, or entity under the income tax laws of the foreign country; and

(v) An agreement to comply with the recapture and interest charge requirements of paragraph (d)(4) of this section.

If the domestic corporation has more than one separate unit, the certification described above may be made on a single document, but the total losses, expenses, and deductions must be separately identified for each separate unit to which the certification applies.

(4) *Recapture upon subsequent use.* If in any taxable year any portion of the losses, expenses, or deductions of a separate unit which were the subject of a

certification filed under paragraph (d)(3) of this section are used by any means to offset the income of any other person, corporation, or entity under the income tax laws of a foreign country, then the total amount of the dual consolidated loss shall be recaptured and reported as income on the tax return of the domestic corporation (or the affiliated group with which the domestic corporation files a consolidated return) for the taxable year that includes the last day of the taxable year for foreign tax purposes during which such use occurred. In addition, the domestic corporation owning the separate unit (or the affiliated group with which the domestic files a consolidated return) shall pay an interest charge on the amount of additional tax owed as a result of the recapture described in the preceding sentence. Such interest shall be determined under the rules of section 6601(a) as if the additional amount of tax had accrued and been due and owing for the taxable year in which the losses, expenses, or deductions giving rise to the recapture gave rise to a tax benefit for U.S. income tax purposes. For purposes of this paragraph (d)(4), a tax benefit will be considered to have arisen in a taxable year in which a loss that would have been considered a dual consolidated loss if paragraph (d)(3) of this section had not applied has reduced the U.S. income tax liability of the domestic corporation or of the affiliated group with which it files a consolidated return.

(5) *Treatment of separate units as separate entities*—(i) *In general.* A separate unit of a domestic corporation will be treated as a separate entity for purposes of determining under this section whether losses of one entity are permitted under the income tax laws of the foreign country to offset the income of another entity.

(ii) *Exception for separate units in same country.* If two or more separate units (not described in paragraph (d)(1) of this section) located in the same foreign country are owned by a single domestic corporation and the income and losses of such units are consolidated on an income tax return in that foreign country, then the separate units will be treated as one separate unit for purposes of paragraph (d)(2) of this section.

(6) *Examples.* The following examples illustrate this paragraph (d).

Example (1). X, a member of a U.S. affiliated group, has a foreign branch (as defined in §1.367(a)–6T(g)) in Country Y. Under the Country Y income tax laws, the branch will be taxed as a permanent establishment and its income and losses may be used (on an elective basis) in the Country Y form of consolidation to offset the income of Z, an affiliate of X, under Country Y law. The branch of X incurs a net operating loss during the taxable year ending December 31, 1987. The foreign branch of X will be treated as a separate domestic corporation and a dual resident corporation under paragraph (d)(2) of this section, and its net operating loss will constitute a dual consolidated loss. Consequently, under paragraph (a) of this section, the branch's net operating loss may not be used to offset the income of any other U.S. affiliate or any income of X other than income derived from the branch operations. However, the branch will not be treated as a dual resident corporation if X (or the affiliated group of which X is a member) files a certification for the taxable year as described in paragraph (d)(3) of this section that its net operating loss was not in fact used by Z (or any other entity) to offset income under the Country Y income tax laws, and that such loss will be recaptured if it is so used in the future.

Example (2). X is classified as a partnership for U.S. tax purposes under Code section 7701 and applicable regulations. A, B and C are the sole partners of X. A and B are domestic corporations and C is a resident of foreign country Y. Under Country Y's law, X is classified as a corporation and its income and losses may be used in the Country Y form of consolidation to offset the income of the companies that are affiliates of X. X generates net operating losses. The partnership interests held by A and B are each treated as separate domestic corporations and dual resident corporations under paragraph (d)(1) of this section. A's and B's pro rata share of the losses of X are dual consolidated losses as defined in paragraph (b)(2) of this section. Under paragraph (a) of this section, the losses of X may not be used to offset the income of any other U.S. affiliate. A's pro rata share of losses of X may be used by A only to offset A's pro rata share of income of X. However, paragraph (a) of this section shall not apply to A's pro rata share of losses of X if A meets one of the exceptions described in paragraph (c) of this section. The same principles apply to limit the use of losses allocated to B.

Example (3). Domestic corporation W owns two unincorporated business operations in

Country Y. The two businesses, A and B, constitute separate foreign branches (as defined in §1.367(a)–6T(g)). Under the tax laws of Country Y, A is treated as a separate corporation and taxed on a residence basis. Thus, A is a separate unit described in paragraph (d)(1) of this section. B is not a separate unit described in paragraph (d)(1) of this section. W is a calendar year taxpayer for both United States and Country Y purposes. During the calendar year ending December 31, 1987, A operated at a loss and B was profitable. Country Y allows both of W's branches to report their combined operations on a single income tax return. Thus, the losses incurred by A may be used on the 1987 Country Y return to offset the income of B. A will be treated as a dual resident corporation under paragraph (d)(1) of this section. Because A is a separate unit described in paragraph (d)(1) of this section, paragraph (d)(5)(i) of this section treats A and B as separate entities for purposes of determining whether the losses, expenses, or deductions of A may be used to offset the income of another person, corporation, or entity and the exception in paragraph (d)(5)(ii) of this section does not apply. Since the loss incurred by A may be used to offset B's income under foreign tax laws, W will not qualify for the exceptions described in paragraph (c) of this section. Accordingly, W will report the income from B on its 1987 U.S. tax return, but will not be allowed to use the losses from A to offset that income or the income from any source other than from the operations of A.

(e) *Special rule for use of dual consolidated loss to offset tainted income*—(1) *In general*. The dual consolidated loss of any dual resident corporation that ceases to be a dual resident corporation shall not be used to offset income of such corporation to the extent that such income is tainted income as defined in paragraph (e)(2) of this section.

(2) *Tainted income defined*. Tainted income is any income derived from tainted assets (as defined in paragraph (e)(3) of this section), during the period beginning on the date of the transfer or acquisition of tainted assets and ending at the close of the fifteenth taxable year following the taxable year in which the dual resident corporation ceased to be a dual resident corporation.

(3) *Tainted assets defined*. Tainted assets are any assets transferred to or acquired by a dual resident corporation in a non-recognition transaction (as defined in section 7701(a)(45)) at any time during the three taxable years immediately preceding the taxable year in which such dual resident corporation ceased to be a dual resident corporation or at any time during the 15 taxable years immediately following the taxable year in which a dual resident corporation ceased to be a dual resident corporation. Tainted assets shall not include assets that were transferred to or acquired by such dual resident corporation on or before December 31, 1986.

(4) *Exception*. For assets transferred to or acquired by a dual resident corporation prior to the time it ceased to be a dual resident corporation, if it can be shown that, for the year in which assets were transferred to or acquired by such corporation, the corporation did not incur a dual consolidated loss (or carry forward a dual consolidated loss to such year) and that there was a valid business reason for the transfer or acquisition of such assets, the income derived from such assets shall not be subject to the limitation described in paragraph (e)(1) of this section.

(f) *Special rules for accounting for dual consolidated losses*—(1) *Determination of amount of dual consolidated loss*—(i) *Dual resident corporation that is a member of an affiliated group*. For purposes of determining whether a dual resident corporation that is a member of an affiliated group filing a consolidated return has a dual consolidated loss for the taxable year, the dual resident corporation shall compute its taxable income (or loss) in accordance with the provisions of §1.1502–12 (relating to computation of separate taxable income of a member of an affiliated group filing a consolidated return), determined by taking into account the adjustments provided in §1.1502–79A(a)(3), that is:

(A) The portion of the consolidated dividends received deduction, the consolidated charitable contributions deductions, and the consolidated section 247 deduction, attributable to such member;

(B) Such member's capital gain net income (determined without regard to any net capital loss carryover attributable to such member);

(C) Such member's net capital loss and section 1231 net loss, reduced by

the portion of the consolidated net capital loss attributable to such member (as determined under paragraph (b)(2) of § 1.1502–22; and

(D) The portion of any consolidated net capital loss carryover attributable to such member which is absorbed in the taxable year.

For purposes of this paragraph (f), any income, gain, or loss of a dual resident corporation shall not be deferred or eliminated under § 1.1502–13 (b)(2) or (c), or § 1.1502–14. Further, sections 267 and 163(e)(3) shall not apply.

(ii) *Dual resident corporation that is a separate unit of a domestic corporation.* For purposes of determining whether a dual resident corporation that is a separate unit of a domestic corporation has a dual consolidated loss for the taxable year, the dual resident corporation shall compute its taxable income (or loss) as if it were a separate domestic corporation and a dual resident corporation, using only those items of income, expenses, and deductions which are otherwise attributable to such separate unit.

(2) *Effect of dual consolidated loss.* For any taxable year in which a dual resident corporation has a dual consolidated loss to which paragraph (a) of this section applies, the following rules shall apply.

(i) If the dual resident corporation is a member of an affiliated group filing a consolidated return, then such affiliated group shall compute its taxable income without regard to the items of income, loss, or deduction of the dual resident corporation for the taxable year. The amount of taxable loss of the dual resident corporation for the taxable year shall be the amount of dual consolidated loss determined under paragraph (f)(1)(i) of this section. Such loss may be carried over or back for use in other taxable years as a net operating loss deduction by the dual resident corporation to the extent permitted under section 172. However, such loss shall be treated as a loss incurred by the dual resident corporation in a separate return limitation year, and, including in the case of a dual resident corporation that is a common parent, shall be subject to all of the limitations of §§ 1.1502–21A(c)(2) or 1.1502–21(c) (as appropriate) (relating to limitations on net operating loss carryovers and carrybacks from separate return limitation years).

(ii) If the dual resident corporation is a separate unit of a domestic corporation, then such domestic corporation and the affiliated group with which it may file a consolidated return shall compute taxable income for the taxable year without regard to the items of income, loss, or deductions of the dual resident corporation for the current year. Further, the loss of the dual resident corporation (the separate unit of the domestic corporation) shall be treated as a loss incurred by a separate corporation and its use shall be subject to all of the limitations of §§ 1.1502–21A(c)(2) or 1.1502–21(c) (as appropriate) (relating to limitations on net operating loss carryovers and carrybacks from separate return limitation years), as if such dual resident corporation were filing a consolidated return with the domestic corporation or with the affiliated group with which the domestic corporation files a consolidated return.

(3) *Basis adjustments for dual consolidated losses.* When a dual resident corporation is a member of an affiliated group filing a consolidated return, each member owning stock in the dual resident corporation shall adjust the basis of the stock in the manner described in subparagraphs (i) and (ii) of this paragraph (f)(3).

(i) *Positive adjustment.* Adjustments shall be made in accordance with the principles of § 1.1502–32(b)(1), except that there shall be no positive adjustment under § 1.1502–32(b)(1)(ii) for any amount of the dual consolidated loss which is not absorbed. There shall be no positive adjustment for any amount included in income upon the use of a dual consolidated loss in a foreign country under § 1.1503–2T(c)(3).

(ii) *Negative adjustments.* Adjustments shall be made in accordance with the principles of § 1.1502–32(b)(2), except that there shall be no negative adjustments under § 1.1502–32(b)(2)(ii) for the amount of the dual consolidated loss.

(4) *Examples.* The following examples illustrate this paragraph (f).

Example (1). (i) P, S1, S2, and T are domestic corporations. P owns all of the stock of S1 and S2. S2 owns all of the stock of T. T is

a dual resident corporation. None of the exceptions described in paragraph (c) apply with respect to T. P, S1, S2, and T have filed and continue to file a consolidated federal income tax return. X, Y, and Bank are corporations which are not members of the affiliated group of which P is the common parent.

(ii) At the beginning of 1989, P had a basis in S2 of $1000. S2 had a basis in T of $500.

(iii) In 1989, T had an interest expense of $100 on a loan from Bank. T sold a noncapital item *u* in which it had a basis of $10 to S1 for $50. T sold noncapital item *v* in which it had a basis of $200 to S1 for $100. The sale of *u* and *v* are deferred intercompany transactions described in §1.1502–13(a)(2). S1 had separate taxable income calculated in accordance with §1.1502–12 of $200. In addition, S1 sold item *w* in which it had a basis of $50 to T for $100. The sale of item *w* is a deferred intercompany transaction described in §1.1502–13(a)(2). P and S2 had no items of income, loss, or deduction for 1989.

(iv) For purposes of determining whether T has a dual consolidated loss in 1989 and the amount of such dual consolidated loss, T's taxable income (loss) is calculated under paragraph (f)(1) as follows:

($100)	interest expense to Bank
($100)	sale of item *v* to S1
$40	sale of item *u* to S1
($160)	

T therefore has a dual consolidated loss of $160 for 1989.

(v) Because T has a dual consolidated loss for the year, the consolidated taxable income of the P affiliated group is calculated without regard to the items of income, loss, or deduction of T. However, T is still a member of the P affiliated group. Therefore, the consolidated taxable income of the P group is $200 (attributable solely to the income of S1). The $50 gain recognized by S1 upon the sale of item *w* to T is deferred pursuant to §1.1502–13(c)(1).

(vi) S2 may not make the positive adjustment provided for in §1.1502–32(b)(1)(ii) to its basis in T for the dual consolidated loss incurred by T. However, S2 must make the negative adjustment provided for in §1.1502–32(b)(2)(i) for the amount of its allocable part of the deficit in earnings and profits of T for the taxable year. Thus, as provided in §1.1502–32(e)(1), S2 shall make a net negative adjustment to its basis in T of $160 and S2's basis in T is now $340. As provided in §1.1502–33(b)(4)(ii)(a), S2's earnings and profits for 1989 must reflect S2's decrease in its basis in T stock for the taxable year. Since S2 has no other earnings and profits for the taxable year, S2 has a deficit in earnings and profits of $160 for the taxable year. As provided in §1.1502–32(b)(2)(i), P must make a negative adjustment for the amount of its allocable part of the deficit in earnings and profits of S2 for the taxable year. Thus, P must make a net negative adjustment to its basis in S2 of $160 and P's basis in S2 is now $840.

Example (2). (i) The facts are the same as in *Example (1)*, except that in 1990, S1 sold items *u* and *v* to X for no gain or loss. T incurred an interest expense of $100 on a loan from Bank. T also sold item *q* in which it had a basis of $50 to S1 for $100. T also sold item *r* in which it had a basis of $100 to Y for $300. P and S2 had no items of income, loss, or deduction for 1990.

(ii) For purposes of determining whether T has a dual consolidated loss in 1990 and the amount of such dual consolidated loss, T's taxable income (loss) is:

($100)	interest expense to Bank
$50	sale of item *q* to S1
$200	sale of item *r* to Y
$150	

T therefore has no dual consolidated loss for 1990.

(iii) Since T does not have a dual consolidated loss for the taxable year, the group's consolidated taxable income is calculated in accordance with the general rule of §1.1502–11 and not in accordance with the rule of §1.1503–2T(f)(2). T has separate taxable income calculated in accordance with §1.1502–12 of $100. On the disposition of items *u* and *v* outside the P affiliated group, no gain or loss is restored to income to T in accordance with §1.1502–13(f)(1)(i) because the gain or loss on these items was not deferred, pursuant to §1.1503–2T(f)(3). The $50 gain on the sale of item *q* from T to S1 is an intercompany transaction on which the gain or loss recognized is deferred pursuant to §1.1502–13(c)(1). The consolidated taxable income of the P affiliated group computed without regard to the consolidated net operating loss deduction is $100.

(iv) As provided by §1.1502–21A(c)(2) of the regulations, the amount of the dual consolidated loss arising in 1989 which may be absorbed by the P affiliated group in 1990 is $100; that is, the consolidated taxable income computed without regard to the consolidated net operating loss deduction minus such consolidated taxable income recomputed by excluding the items of income and deduction of T. Section 1.1502–21A(c) allows $100 of the dual consolidated loss to be included in the consolidated net operating loss deduction for 1990. The consolidated taxable income of the P group for 1990 is $0.

(v) S2 must make the positive adjustment provided for in §1.1502–32(b)(1)(i) to its basis in T for the amount of its allocable part of the undistributed earnings and profits of T for the taxable year. S2 can not make the negative adjustment provided for in §1.1502–32(b)(2)(ii) for the dual consolidated loss of T incurred in 1989 and absorbed in 1990. Thus,

as provided in § 1.1502–32(e)(2), S2 shall make a net positive adjustment to its basis in T of $100 and S2's basis in T is now $440. As provided in § 1.1502–33(b)(4)(ii)(a), S2's earnings and profits for 1989 must reflect S2's increase in its basis in T stock for the taxable year. Since S2 has no other earnings and profits for the taxable year, S2 has earnings and profits of $100 for the taxable year. As provided in § 1.1502–32(b)(1)(i), P must make a positive adjustment for the amount of its allocable part of the undistributed earnings and profits of S2 for the taxable year. Thus, P must make a net positive adjustment to its basis in S2 of $100 and P's basis in S2 is now $940.

[T.D. 8261, 54 FR 37317, Sept. 8, 1989. Redesignated by T.D. 8434, 57 FR 41093, Sept. 9, 1992, as amended by T.D. 8677, 61 FR 33325, June 27, 1996; T.D. 8823, 64 FR 36101, July 2, 1999]

RELATED RULES

§ 1.1551–1 Disallowance of surtax exemption and accumulated earnings credit.

(a) *In general.* If:

(1) Any corporation transfers, on or after January 1, 1951, and before June 13, 1963, all or part of its property (other than money) to a transferee corporation,

(2) Any corporation transfers, directly or indirectly, after June 12, 1963, all or part of its property (other than money) to a transferee corporation, or

(3) Five or fewer individuals are in control of a corporation and one or more of them transfer, directly or indirectly, after June 12, 1963, property (other than money) to a transferee corporation, and the transferee was created for the purpose of acquiring such property or was not actively engaged in business at the time of such acquisition, and if after such transfer the transferor or transferors are in control of the transferee during any part of the taxable year of the transferee, then for such taxable year of the transferee the Secretary or his delegate may disallow the surtax exemption defined in section 11(d) or the accumulated earnings credit of $150,000 ($100,000 in the case of taxable years beginning before January 1, 1975) provided in paragraph (2) or (3) of section 535(c), unless the transferee establishes by the clear preponderance of the evidence that the securing of such exemption or credit was not a major purpose of the transfer.

(b) *Purpose of section 1551.* The purpose of section 1551 is to prevent avoidance or evasion of the surtax imposed by section 11(c) or of the accumulated earnings tax imposed by section 531. It is not intended, however, that section 1551 be interpreted as delimiting or abrogating any principle of law established by judicial decision, or any existing provisions of the Code, such as sections 269 and 482, which have the effect of preventing the avoidance or evasion of income taxes. Such principles of law and such provisions of the Code, including section 1551, are not mutually exclusive, and in appropriate cases they may operate together or they may operate separately.

(c) *Application of section 269(b) to cases covered by section 1551.* The provisions of section 269(b) and the authority of the district director thereunder, to the extent not inconsistent with the provisions of section 1551, are applicable to cases covered by section 1551. Pursuant to the authority provided in section 269(b) the district director may allow to the transferee any part of a surtax exemption or accumulated earnings credit for a taxable year for which such exemption or credit would otherwise be disallowed under section 1551(a); or he may apportion such exemption or credit among the corporations involved. For example, corporation A transfers on January 1, 1955, all of its property to corporations B and C in exchange for all of the stock of such corporations. Immediately thereafter, corporation A is dissolved and its stockholders become the sole stockholders of corporations B and C. Assuming that corporations B and C are unable to establish by the clear preponderance of the evidence that the securing of the surtax exemption defined in section 11(d) or the accumulated earnings credit provided in section 535, or both, was not a major purpose of the transfer, the district director is authorized under sections 1551(c) and 269(b) to allow one such exemption and credit and to apportion such exemption and credit between corporations B and C.

(d) *Actively engaged in business.* For purposes of this section, a corporation maintaining an office for the purpose of preserving its corporate existence is not considered to be ''actively engaged

in business'' even though such corporation may be deemed to be ''doing business'' for other purposes. Similarly, for purposes of this section, a corporation engaged in winding up its affairs, prior to an acquisition to which section 1551 is applicable, is not considered to be ''actively engaged in business.''

(e) *Meaning and application of the term ''control''*—(1) *In general.* For purposes of this section, the term ''control'' means:

(i) With respect to a transferee corporation described in paragraph (a) (1) or (2) of this section, the ownership by the transferor corporation, its shareholders, or both, of stock possessing either *(a)* at least 80 percent of the total combined voting power of all classes of stock entitled to vote, or *(b)* at least 80 percent of the total value of shares of all classes of stock.

(ii) With respect to each corporation described in paragraph (a)(3) of this section, the ownership by five or fewer individuals of stock possessing *(a)* at least 80 percent of the total combined voting power of all classes of stock entitled to vote or at least 80 percent of the total value of shares of all classes of the stock of each corporation, and *(b)* more than 50 percent of the total combined voting power of all classes of stock entitled to vote or more than 50 percent of the total value of shares of all classes of stock of each corporation, taking into account the stock ownership of each such individual only to the extent such stock ownership is identical with respect to each such corporation.

(2) *Special rules.* In determining for purposes of this section whether stock possessing at least 80 percent (or more than 50 percent in the case of subparagraph (1)(ii)*(b)* of this paragraph) of the total combined voting power of all classes of stock entitled to vote is owned, all classes of such stock shall be considered together; it is not necessary that at least 80 percent (or more than 50 percent) of each class of voting stock be owned. Likewise, in determining for purposes of this section whether stock possessing at least 80 percent (or more than 50 percent) of the total value of shares of all classes of stock is owned, all classes of stock of the corporation shall be considered together; it is not necessary that at least 80 percent (or more than 50 percent) of the value of shares of each class be owned. The fair market value of a share shall be considered as the value to be used for purposes of this computation. With respect to transfers described in paragraph (a) (2) or (3) of this section, the ownership of stock shall be determined in accordance with the provisions of section 1563(e) and the regulations thereunder. With respect to transfers described in paragraph (a)(1) of this section, the ownership of stock shall be determined in accordance with the provisions of section 544 and the regulations thereunder, except that constructive ownership under section 544(a)(2) shall be determined only with respect to the individual's spouse and minor children. In determining control, no stock shall be excluded because such stock was acquired before January 1, 1951 (the effective date of section 1551(a)(1)), or June 13, 1963 (the effective date of section 1551(a) (2) and (3)).

(3) *Example.* This paragraph may be illustrated by the following example:

Example. On January 1, 1964, individual A, who owns 50 percent of the voting stock of corporation X, and individual B, who owns 30 percent of such voting stock, transfer property (other than money) to corporation Y (newly created for the purpose of acquiring such property) in exchange for all of Y's voting stock. After the transfer, A and B own the voting stock of corporations X and Y in the following proportions:

Individual	Corp. X	Corp. Y	Identical ownership
A	50	30	30
B	30	50	30
Total	80	80	60

The transfer of property by A and B to corporation Y is a transfer described in paragraph (a)(3) of this section since (i) A and B own at least 80 percent of the voting stock of corporations X and Y, and (ii) taking into account each such individual's stock ownership only to the extent such ownership is identical with respect to each such corporation, A and B own more than 50 percent of the voting stock of corporations X and Y.

(f) *Taxable year of allowance or disallowance*—(1) *In general.* The district director's authority with respect to cases covered by section 1551 is not limited to the taxable year of the

transferee corporation in which the transfer of property occurs. Such authority extends to the taxable year in which the transfer occurs or any subsequent taxable year of the transferee corporation if, during any part of such year, the transferor or transferors are in control of the transferee.

(2) *Examples*. This paragraph may be illustrated by the following examples:

Example (1). On January 1, 1955, corporation D transfers property (other than money) to corporation E, a corporation not actively engaged in business at the time of the acquisition of such property, in exchange for 60 percent of the voting stock of E. During a later taxable year of E, corporation D acquires an additional 20 percent of such voting stock. As a result of such additional acquisition, D owns 80 percent of the voting stock of E. Accordingly, section 1551(a)(1) is applicable for the taxable year in which the later acquisition of stock occurred and for each taxable year thereafter in which the requisite control continues.

Example (2). On June 20, 1963, individual A, who owns all of the stock of corporation X, transfers property (other than money) to corporation Y, a corporation not actively engaged in business at the time of the acquision of such property, in exchange for 60 percent of the voting stock of Y. During a later taxable year of Y, A acquires an additional 20 percent of such voting stock. After such acquisition A owns at least 80 percent of the voting stock of corporations X and Y. Accordingly, section 1551(a)(3) is applicable for the taxable year in which the later acquisition of stock occurred and for each taxable year thereafter in which the requisite control continues.

Example (3). Individuals A and B each owns 50 percent of the stock of corporation X. On January 15, 1964, A transfers property (other than money) to corporation Y (newly created by A for the purpose of acquiring such property) in exchange for all the stock of Y. In a subsequent taxable year of Y, individual B buys 50 percent of the stock which A owns in Y (or he transfers money to Y in exchange for its stock, as a result of which he owns 50 percent of Y's stock). Immediately thereafter the stock ownership of A and B in corporation Y is identical to their stock ownership in corporation X. Accordingly, section 1551(a)(3) is applicable for the taxable year in which B acquires stock in corporation Y (see paragraph (g)(3) of this section) and for each taxable year thereafter in which the requisite control continues. Moreover, if B's acquisition of stock in Y is pursuant to a preexisting agreement with A, A's transfer to Y and B's acquisition of Y's stock are considered a single transaction and section 1551(a)(3) also would be applicable for the taxable year in which A's transfer to Y took place and for each taxable year thereafter in which the requisite control continues.

(g) *Nature of transfer*—(1) *Corporate transfers before June 13, 1963*. A transfer made before June 13, 1963, by any corporation of all or part of its assets, whether or not such transfer qualifies as a reorganization under section 368, is within the scope of section 1551(a)(1), except that section 1551(a)(1) does not apply to a transfer of money only. For example, the transfer of cash for the purpose of expanding the business of the transferor corporation through the formation of a new corporation is not a transfer within the scope of section 1551(a)(1), irrespective of whether the new corporation uses the cash to purchase from the transferor corporation stock in trade or similar property.

(2) *Corporate transfers after June 12, 1963*. A direct or indirect transfer made after June 12, 1963, by any corporation of all or part of its assets to a transferee corporation, whether or not such transfer qualifies as a reorganization under section 368, is within the scope of section 1551(a)(2) except that section 1551(a)(2) does not apply to a transfer of money only. For example, if a transferor corporation transfers property to its shareholders or to a subsidiary, the transfer of that property by the shareholders or the subsidiary to a transferee corporation as part of the same transaction is a transfer of property by the transferor corporation to which section 1551(a)(2) applies. A transfer of property pursuant to a purchase by a transferee corporation from a transferor corporation controlling the transferee is within the scope of section 1551(a)(2), whether or not the purchase follows a transfer of cash from the controlling corporation.

(3) *Other transfers after June 12, 1963*. A direct or indirect transfer made after June 12, 1963, by five or fewer individuals to a transferee corporation, whether or not such transfer qualifies under one or more other provisions of the Code (for example, section 351), is within the scope of section 1551(a)(3) except that section 1551(a)(3) does not apply to a transfer of money only. Thus, if one of five or fewer individuals who are in control of a corporation transfers property (other than money)

to a controlled transferee corporation, the transfer is within the scope of section 1551(a)(3) notwithstanding that the other individuals transfer nothing or transfer only money.

(4) *Examples*. This paragraph may be illustrated by the following examples:

Example (1). Individuals A and B each owns 50 percent of the voting stock of corporation X. On January 15, 1964, A and B each acquires property (other than money) from X and, as part of the same transaction, each transfers such property to his wholly owned corporation (newly created for the purpose of acquiring such property). A and B retain substantial continuing interests in corporation X. The transfers to the two newly created corporations are within the scope of section 1551(a)(2).

Example (2). Corporation W organizes corporation X, a wholly owned subsidiary, for the purpose of acquiring the properties of corporation Y. Pursuant to a reorganization qualifying under section 368(a)(1)(C), substantially all of the properties of corporation Y are transferred on June 15, 1963, to corporation X solely in exchange for voting stock of corporation W. There is a transfer of property from W to X within the meaning of section 1551(a)(2).

Example (3). Individuals A and B, each owning 50 percent of the voting stock of corporation X, organize corporation Y to which each transfers money only in exchange for 50 percent of the stock of Y. Subsequently, Y uses such money to acquire other property from A and B after June 12, 1963. Such acquisition is within the scope of section 1551(a)(3).

Example (4). Individual A owns 55 percent of the stock of corporation X. Another 25 percent of corporation X's stock is owned in the aggregate by individuals B, C, D, and E. On June 15, 1963, individual A transfers property to corporation Y (newly created for the purpose of acquiring such property) in exchange for 60 percent of the stock of Y, and B, C, and D acquire all of the remaining stock of Y. The transfer is within the scope of section 1551(a)(3).

(h) *Purpose of transfer*. In determining, for purposes of this section, whether the securing of the surtax exemption or accumulated earnings credit constituted ''a major purpose'' of the transfer, all circumstances relevant to the transfer shall be considered. ''A major purpose'' will not be inferred from the mere purchase of inventory by a subsidiary from a centralized warehouse maintained by its parent corporation or by another subsidiary of the parent corporation. For disallowance of the surtax exemption and accumulated earnings credit under section 1551, it is not necessary that the obtaining of either such credit or exemption, or both, have been the sole or principal purpose of the transfer of the property. It is sufficient if it appears, in the light of all the facts and circumstances, that the obtaining of such exemption or credit, or both, was one of the major considerations that prompted the transfer. Thus, the securing of the surtax exemption or the accumulated earnings credit may constitute ''a major purpose'' of the transfer, notwithstanding that such transfer was effected for a valid business purpose and qualified as a reorganization within the meaning of section 368. The taxpayer's burden of establishing by the clear preponderance of the evidence that the securing of either such exemption or credit or both was not ''a major purpose'' of the transfer may be met, for example, by showing that the obtaining of such exemption, or credit, or both, was not a major factor in relationship to the other consideration or considerations which prompted the transfer.

[T.D. 6911, 32 FR 3214, Feb. 24, 1967, as amended by T.D. 7376, 40 FR 42745, Sept. 16, 1975]

§ 1.1552–1 Earnings and profits.

(a) *General rule*. For the purpose of determining the earnings and profits of each member of an affiliated group which is required to be included in a consolidated return for such group filed for a taxable year beginning after December 31, 1953, and ending after August 16, 1954, the tax liability of the group shall be allocated among the members of the group in accordance with one of the following methods, pursuant to an election under paragraph (c) of this section:

(1)(i) The tax liability of the group shall be apportioned among the members of the group in accordance with the ratio which that portion of the consolidated taxable income attributable to each member of the group having taxable income bears to the consolidated taxable income.

(ii) For consolidated return years beginning after December 31, 1965, a member's portion of the tax liability of the group under the method of allocation provided by subdivision (i) of this

subparagraph is an amount equal to the tax liability of the group multiplied by a fraction, the numerator of which is the taxable income of such member, and the denominator of which is the sum of the taxable incomes of all the members. For purposes of this subdivision the taxable income of a member shall be the separate taxable income determined under §1.1502–12, adjusted for the following items taken into account in the computation of consolidated taxable income:

(a) The portion of the consolidated net operating loss deduction, the consolidated charitable contributions deduction, the consolidated dividends received deduction, the consolidated section 247 deduction, the consolidated section 582(c) net loss, and the consolidated section 922 deduction, attributable to such member;

(b) Such member's capital gain net income (net capital gain for taxable years beginning before January 1, 1977) (determined without regard to any net capital loss carryover attributable to such member);

(c) Such member's net capital loss and section 1231 net loss, reduced by the portion of the consolidated net capital loss attributable to such member; and

(d) The portion of any consolidated net capital loss carryover attributable to such member which is absorbed in the taxable year.

If the computation of the taxable income of a member under this subdivision results in an excess of deductions over gross income, then for purposes of this subdivision such member's taxable income shall be zero.

(2)(i) The tax liability of the group shall be allocated to the several members of the group on the basis of the percentage of the total tax which the tax of such member if computed on a separate return would bear to the total amount of the taxes for all members of the group so computed.

(ii) For consolidated return years beginning after December 31, 1965, a member's portion of the tax liability of the group under the method of allocation provided by subdivision (i) of this subparagraph is an amount equal to the tax liability of the group multiplied by a fraction, the numerator of which is the separate return tax liability of such member, and the denominator of which is the sum of the separate return tax liabilities of all the members. For purposes of this subdivision the separate return tax liability of a member is its tax liability computed as if it has filed a separate return for the year except that:

(a) Gains and losses on intercompany transactions shall be taken into account as provided in §1.1502–13 as if a consolidated return had been filed for the year;

(b) Gains and losses relating to inventory adjustments shall be taken into account as provided in §1.1502–18 as if a consolidated return had been filed for the year;

(c) Transactions with respect to stock, bonds, or other obligations of members shall be reflected as provided in §1.1502–13 (f) and (g) as if a consolidated return had been filed for the year;

(d) Excess losses shall be included in income as provided in §1.1502–19 as if a consolidated return had been filed for the year;

(e) In the computation of the deduction under section 167, property shall not lose its character as new property as a result of a transfer from one member to another member during the year;

(f) A dividend distributed by one member to another member during the year shall not be taken into account in computing the deductions under section 243(a)(1), 244(a), 245, or 247 (relating to deductions with respect to dividends received and dividends paid);

(g) Basis shall be determined under §§1.1502–31 and 1.1502–32, and earnings and profits shall be determined under §1.1502–33, as if a consolidated return had been filed for the year;

(h) Subparagraph (2) of §1.1502–3(f) shall apply as if a consolidated return had been filed for the year; and

(i) For purposes of Subtitle A of the Code, the surtax exemption of the member shall be an amount equal to $25,000 ($50,000 in the case of a taxable year ending in 1975), divided by the number of members (or such portion of $25,000 or $50,000 which is apportioned to the member pursuant to a schedule attached to the consolidated return for

the taxable year). (However, if for the taxable year some or all of the members are component members of a controlled group of corporations (within the meaning of section 1563) and if there are other such component members which do not join in filing the consolidated return for such year, the amount to be divided among the members filing the consolidated return shall be (in lieu of $25,000 or $50,000) the sum of the amounts apportioned to the component members which join in filing the consolidated return (as determined for taxable years beginning after December 31, 1974 under § 1.1561–2(a)(2) or § 1.1561–3, whichever is applicable, and for taxable years beginning before January 1, 1975, under § 1.561–2A(a)(2) or § 1.1561–3A whichever is applicable).)

If the computation of the separate return tax liability of a member under this subdivision does not result in a positive tax liability, then for purposes of this subdivision such member's separate return tax liability shall be zero.

(3)(i) The tax liability of the group (excluding the tax increases arising from the consolidation) shall be allocated on the basis of the contribution of each member of the group to the consolidated taxable income of the group. Any tax increases arising from the consolidation shall be distributed to the several members in direct proportion to the reduction in tax liability resulting to such members from the filing of the consolidated return as measured by the difference between their tax liabilities determined on a separate return basis and their tax liabilities (determined without regard to the 2-percent increase provided by section 1503(a) and paragraph (a) of § 1.1502–30A (as contained in the 26 CFR edition revised as of April 1, 1996) for taxable years beginning before January 1, 1964) based on their contributions to the consolidated taxable income.

(ii) For consolidated return years beginning after December 31, 1965, a member's portion of the tax liability of the group under the method of allocation provided by subdivision (i) of this subparagraph shall be determined by:

(a) Allocating the tax liability of the group in accordance with subparagraph (1)(ii) of this paragraph, but

(b) The amount of tax liability allocated to any member shall not exceed the separate return tax liability of such member, determined in accordance with subparagraph (2)(ii) of this paragraph, and

(c) The sum of the amounts which would be allocated to the members but for *(b)* of this subdivision (ii) shall be apportioned among the other members in direct proportion to, but limited to, the reduction in tax liability resulting to such other members. Such reduction for any member shall be the excess, if any, of *(1)* its separate this paragraph.

(4) The tax liability of the group shall be allocated in accordance with any other method selected by the group with the approval of the Commissioner. No method of allocation may be approved under this subparagraph which may result in the allocation of a positive tax liability for a taxable year, among the members who are allocated a positive tax liability for such year, in a total amount which is more or less than the tax liability of the group for such year. (However, see paragraph (d) of § 1.1502–33.)

(b) *Application of rules*—(1) *Tax liability of the group.* For purposes of section 1552 and this section, the tax liability of the group for a taxable year shall consist of the Federal income tax liability of the group for such year determined in accordance with § 1.1502–2 or § 1.1502–30A (as contained in the 26 CFR edition revised as of April 1, 1996), which-ever is applicable. Thus, in the case of a carryback of a loss or credit to such year, although the earnings and profits of the members of the group may not be adjusted until the subsequent taxable year from which the loss or credit was carried back, the effect of the carryback, for purposes of this section, shall be determined by allocating the amount of the adjustment as a part of the tax liability of the group for the taxable year to which the loss or credit is carried. For example, if a consolidated net operating loss is carried back from 1969 to 1967, the allocation of the tax liability of the group for 1967 shall be recomputed in accordance with the method of allocation used for 1967, and the changes resulting from such recomputation shall, for accrual method taxpayers, be reflected in the earnings

and profits of the appropriate members in 1969.

(2) *Effect of allocation.* The amount of tax liability allocated to a corporation as its share of the tax liability of the group, pursuant to this section, shall (i) result in a decrease in the earnings and profits of such corporation in such amount, and (ii) be treated as a liability of such corporation for such amount. If the full amount of such liability is not paid by such corporation, pursuant to an agreement among the members of the group or otherwise, the amount which is not paid will generally be treated as a distribution with respect to stock, a contribution to capital, or a combination thereof, as the case may be.

(c) *Method of election.* (1) The election under paragraph (a) (1), (2), or (3) of this section shall be made not later than the time prescribed by law for filing the first consolidated return of the group for a taxable year beginning after December 31, 1953, and ending after August 16, 1954 (including extensions thereof). If the group elects to allocate its tax liability in accordance with the method prescribed in paragraph (a) (1), (2), or (3) of this section, a statement shall be attached to the return stating which method is elected. Such statement shall be made by the common parent corporation and shall be binding upon all members of the group. In the event that the group desires to allocate its tax liability in accordance with any other method pursuant to paragraph (a)(4) of this section, approval of such method by the Commissioner must be obtained within the time prescribed above. If such approval is not obtained in such time, the group shall allocate in accordance with the method prescribed in paragraph (a)(1) of this section. The request shall state fully the method which the group wishes to apply in apportioning the tax liability. Except as provided in subparagraph (2) of this paragraph, an election once made shall be irrevocable and shall be binding upon the group with respect to the year for which made and for all future years for which a consolidated return is filed or required to be filed unless the Commissioner authorizes a change to another method prior to the time prescribed by law for filing the return for the year in which such change is to be effective.

(2) Each group may make a new election to use any one of the methods prescribed in paragraph (a) (1), (2), or (3) of this section for its first consolidated return year beginning after December 31, 1965, or in conjunction with an election under paragraph (d) of §1.1502–33, or may request the Commissioner's approval of a method under paragraph (a)(4) of this section for its first consolidated return year beginning after December 31, 1965, irrespective of its previous method of allocation under this section. If such new election is not made in conjunction with an election under paragraph (d) of §1.1502–33, it shall be effective for the first consolidated return year beginning after December 31, 1965, and all succeeding years. (See §1.1502–33 for the method of making such new election in conjunction with an election under paragraph (d) of §1.1502–33.) Any other such new election (or request for the Commissioner's approval of a method under paragraph (a)(4) of this section) shall be made within the time prescribed by law for filing the consolidated return for the first taxable year beginning after December 31, 1965 (including extensions thereof), or within 60 days after July 3, 1968, whichever is later. Such new election shall be made by attaching a statement to the consolidated return for the first taxable year beginning after December 31, 1965, or if such election is made within the time prescribed above but after such return is filed, by filing a statement with the internal revenue officer with whom such return was filed.

(d) *Failure to elect.* If a group fails to make an election in its first consolidated return, or any other election, in accordance with paragraph (c) of this section, the method prescribed under paragraph (a)(1) of this section shall be applicable and shall be binding upon the group in the same manner as if an election had been made to so allocate.

(e) *Definitions.* Except as otherwise provided in this section, the terms used in this section shall have the same meaning as provided in the regulations under section 1502.

(f) *Example*. The provisions of this section may be illustrated by the following example:

Example. Corporation P is the common parent owning all of the stock of corporations S1 and S2, members of an affiliated group. A consolidated return is filed for the taxable year ending December 31, 1966, by P, S1, and S2. For 1966 such corporations had the following taxable incomes or losses computed in accordance with paragraph (a)(1)(ii) of this section:

P	0
S1	$2,000
S2	(1,000)

The group has not made an election under paragraph (c) of this section or paragraph (d) of § 1.1502–33. Accordingly, the method of allocation provided by paragraph (a)(1) of this section is in effect for the group. Assuming that the consolidated taxable income is equal to the sum of the members taxable income and losses, or $1,000, the tax liability of the group for the year (assuming a 22-percent rate) is $220, all of which is allocated to S1. S1 accordingly reduces its earnings and profits in the amount of $220, irrespective of who actually pays the tax liability. If S1 pays the $220 tax liability there will be no further effect upon the income, earnings and profits, or the basis of stock of any member. If, however, P pays the $220 tax liability (and such payment is not in fact a loan from P to S1), then P shall be treated as having made a contribution to the capital of S1 in the amount of $220. On the other hand, if S2 pays the $220 tax liability (and such payment is not in fact a loan from S2), then S2 shall be treated as having made a distribution with respect to its stock to P in the amount of $220, and P shall be treated as having made a contribution to the capital of S1 in the amount of $220.

[T.D. 6962, 33 FR 9655, July 3, 1968, as amended by T.D. 7825, 42 FR 64694, Dec. 28, 1977; T.D. 7728, 45 FR 72650, Nov. 3, 1980; T.D. 8560, 59 FR 41675, Aug. 15, 1994; T.D. 8597, 60 FR 36680, July 18, 1995; T.D. 8677, 61 FR 33325, June 27, 1996]

CERTAIN CONTROLLED CORPORATIONS

§ 1.1561–0 Effective date.

(a) *Taxable years beginning after December 31, 1974*. The provisions of §§ 1.1561–1 through 1.1561–3 apply only to taxable years beginning after December 31, 1974.

(b) *Taxable years beginning before January 1, 1975*. The provisions of §§ 1.1561–1A through 1.1561–3A apply only to taxable years beginning before January 1, 1975.

[T.D. 7528, 42 FR 64694, Dec. 28, 1977]

§ 1.1561–1 Limitations on certain multiple tax benefits in the case of certain controlled corporations.

(a) *In general*. Part II (section 1561 and following), subchapter B, chapter 6 of the Code, provides rules relating to certain controlled corporations. In general, section 1561 provides that the component members of a controled group of corporations on a December 31, for their taxable years which include such December 31, shall be limited for purposes of subtitle A to:

(1) One surtax exemption under section 11(d),

(2) One $150,000 amount for purposes of computing the accumlated earnings credit under section 535(c) (2) and (3), and

(3) One $25,000 amount for purposes of computing the limitation on the small business deduction of life insurance companies under sections 804(a)(4) and 809 (d)(10).

For certain definitions (including the definition of a ''controlled group of corporations'' and a ''component member'') and special rules for purposes of part II of subchapter B, see section 1563 and the regulations thereunder.

(b) *Tax avoidance*. The provisions of part II, subchapter B, chapter 6 do not delimit or abrogate any principle of law established by judicial decision, or any existing provisions of the code, such as sections 269, 482, and 1551, which have the effect of preventing the avoidance or evasion of income taxes.

(c) *Special rules*. (1) For purposes of sections 1561 and 1563 and the regulations thereunder, the term ''corporation'' includes an electing small business corporation (as defined in section 1371 (b)). However, for the treatment of an electing small business corporation as an excluded member of a controlled group of corporations, see paragraph (b)(2)(ii) of § 1.1563–1.

(2) In the case of corporations electing a 52–53-week taxable year under section 441(f)(1), the provisions of sections 1561 and 1563 and the regulations thereunder shall be applied in accordance with the special rule section

441(f)(2)(A). See paragraph (b)(1) of § 1.441–2.

[T.D. 7528, 42 FR 64694, Dec. 28, 1977]

§ 1.1561–2 Determination of amount of tax benefits.

(a) *Surtax exemption.* (1) If a corporation is a component member of a controlled group of corporations on December 31, the surtax exemption under section 11(d) of such corporation for the taxable year which includes such December 31 shall be an amount equal to:

(i) $50,000 divided by the number of corporations which are component members of such group on such December 31, or

(ii) If an apportionment plan is adopted under § 1.1561–3 which is effective with respect to such taxable year such portion of $50,000 as is apportioned to such member in accordance with such plan.

(2) In the case of a controlled group of corporations which includes component members which join in the filing of a consolidated return and other component members which do not join in the filing of such a return, and where there is no apportionment plan effective under § 1.1561–3 apportioning the $50,000 amount among the component members filing the consolidated return and the other component members of the controlled group, each component member of the controlled group, (including each component member which joins in filing the consolidated return) shall be treated as a separate corporation for purposes of equally apportioning the $50,000 amount under subparagraph (1)(i) of this paragraph. In such case, the surtax exemption of the corporations filing the consolidated return shall be the sum of the amounts apportioned to each component member which joins in filing the consolidated return.

(3) The provisions of section 1561 may reduce the surtax exemption of any corporation which is a component member of a controlled group or corporations and which is subject to the tax imposed by section 11, or by any other provision of subtitle A of the Code if the tax under such other provisions is computed by reference to the amount of the surtax exemption provided by section 11. Such other provisions include, for example, sections 511(a)(1), 594, 802, 831, 852, 857, 882, 1201, and 1378.

(4) This paragraph (a) shall not apply with respect to any component member of a controlled group of corporations on a December 31 if one or more component members of such controlled group has a taxable year including such December 31 which ends after December 31, 1978. Rules pertaining to the apportionment of the surtax exemption with respect to component members of controlled groups of corporations to which this paragraph does not apply are reserved.

(5) The application of this paragraph may be illustrated by the following examples:

Example (1). Corporations W, X, Y, and Z are component members of a controlled group of corporations on December 31, 1975, and each corporation files its income tax return on the basis of a calendar year. For their taxable years ending on December 31, 1975, W and X each incurs a net operating loss; Y has $5,250 of taxable income; and Z has $30,000 of taxable income. If an apportionment plan is not effective for such taxable years, the surtax exemption under section 11(d) of each corporation determined under subparagraph (1)(i) of this paragraph is $12,500 ($50,000÷4). However, the four corporations may avoid a pro rata division of the $50,000 amount by filing an apportionment plan in accordance with the provisions of § 1.1561–3 allocating the $50,000 amount in any manner they deem proper.

Example (2). Corporation A files its income tax return on the basis of a calendar year; corporation B files its income tax return on the basis of a fiscal year ending March 31. On December 31, 1975, A and B are the only component members of a controlled group of corporations. Under subparagraph (1)(i) of this paragraph, the surtax exemption of A for 1975, and the surtax exemption of B for its fiscal year ending March 31, 1976, is $25,000 ($50,000÷2). However, if an apportionment plan is filed in accordance with the provisions of § 1.1561–3, the surtax exemption of each such corporation will be the amount apportioned to the corporation pursuant to the plan.

Example (3). Corporations R, P, and S are component members of a controlled group of corporations on December 31, 1975. P and S file a consolidated return for their fiscal years ending June 30, 1976. R files a separate return for its taxable year ending on December 31, 1975. No apportionment plan is effective with respect to R's, P's, and S's taxable years which include December 31, 1975.

Therefore R, P, and S are each apportioned $16,666.67 ($50,000÷3) as their surtax exemption under section 11(d) for their taxable years including such date. The surtax exemption of the affiliated group filing a consolidated return (P and S) for the year ending June 30, 1976, is $33,333.34 (i.e., the sum of the $16,666.67 amounts apportioned to P and S). However, if an apportionment plan is filed in accordance with the provisions of § 1.1561–3, the surtax exemption of the corporations which are members of the affiliated group filing a consolidated return and of each other corporation which is a component member of the controlled group of corporations will be the amount apportioned to such affiliated group and to each such other corporations pursuant to the plan.

(b) *Allocation of amounts of taxable income subject to normal tax.* (1) In the case of a taxable year of a corporation, if:

(i) The amount of normal tax under section 11(b) is equal to the sum of 20 percent of so much of the taxable income as does not exceed $25,000, plus 22 percent of so much of the taxable income as exceeds $25,000 for a taxable year, and

(ii) The amount of surtax exemption of the corporation is less than $50,000 under paragraph (a)(1) (i) or (ii) of this section,

then for purposes of applying section 11(b), the taxable income subject to taxation at the rate of 20 percent shall be (in lieu of the first $25,000 of taxable income) one-half of the amount of the surtax exemption allocated to such corporation under paragraph (a)(1) (i) or (ii) of this section. In addition, the amount of taxable income subject to taxation at the rate of 22 percent shall be (in lieu of the amount of taxable income in excess of $25,000) the taxable income that exceeds one-half of the amount of the surtax exemption allocated to such corporation under paragraph (a)(1) (i) or (ii) of this section for such year. In the case of an affiliated group of corporations filing a consolidated return for a taxable year, the preceding sentence shall be applied by substituting the term ''affiliated group'' for the term ''corporation'' each time it appears.

(2) The provisions of this paragraph may be illustrated by the following example:

Example. Corporations P and S are component members of a controlled group of corporations on December 31, 1975, and each corporation files a separate income tax return on the basis of a calendar year. For the taxable year ending on December 31, 1975, P incurs a net operating loss and S has $25,000 of taxable income. If an apportionment plan is not effective for that taxable year, the surtax exemption under section 11(d) of each corporation (determined under paragraph (a)(1)(i) of this section) is $25,000 ($50,000÷2). For purposes of applying section 11(b) to determine S's liability for tax for 1975, the amount of taxable income subject to taxation at the rate of 20 percent is limited to $12,500 (i.e., one-half of the amount of the surtax exemption allocated to S under paragraph (a)(1)(i) of this section), and the amount of taxable income subject to taxation at the rate of 22 percent is $12,500 (i.e., the amount of taxable income in excess of one-half of the amount of the surtax exemption). If, on the other hand, an apportionment plan is adopted by P and S effective for such taxable years apportioning the entire $50,000 surtax exemption to S, then, for purposes of applying section 11(b) to determine S's liability for tax for 1975, the amount of taxable income subject to taxation at the rate of 20 percent is $25,000.

(3) If an apportionment plan is adopted under § 1.1561–3 for a December 31, and if paragraph (b)(1) of this section applies to any component member whose taxable year includes such December 31, then the plan shall specify:

(i) The amount subject to taxation at the rate of 20 percent, and

(ii) The amount subject to taxation at the rate of 22 percent,

as determined under paragraph (b)(1) of this section for each component member. The information required to be included in a plan by this subparagraph is in addition to the information required under § 1.1561–3(a). Where an existing apportionment plan is effective under § 1.1561–3(a)(3) for such December 31, the additional information required under this subparagraph may be provided in an amendment of the existing plan as provided in § 1.1561–3(c).

(c) *Accumulated earnings credit.* (1) Except as provided in subparagraph (2) of this paragraph, if a corporation is a component member of a controlled group on a December 31, the amount for purposes of computing the accumlated earnings credit under section 535(c) (2) and (3) of such corporation shall be an amount equal to

$150,000 divided by the number of corporations which are component members of such group on such December 31. In the case of a controlled group of corporations which includes component members which join in the filing of a consolidated return and other component members which do not join in the filing of such a return, each component member of the controlled group (including each component member which joins in filing the consolidated return) shall be treated as a separate corporation for purposes of equally apportioning the $150,000 amount under this subparagraph. In such case, the amount for purposes of computing the accumulated earnings credit for the component members filing the consolidated return shall be the sum of the amounts apportioned to each component member which joins in filing the consolidated return.

(2) If, with respect to any component member of the controlled group, the amount determined under subparagraph (1) of this paragraph exceeds the sum of (i) such member's accumlated earnings and profits as of the close of the preceding taxable year, plus (ii) such member's earnings and profits for the taxable year which are retained (within the meaning of section 535(c)(1)), then any such excess shall be subtracted from the amount determined under subparagraph (1) of this paragraph with respect to such member and shall be divided equally among those remaining component members of the controlled group that do not have such an excess (until no such excess remains to be divided among those remaining members that have not had such an excess). The excess so divided among such remaining members shall be added to the amount determined under subparagraph (1) with respect to such members. If a controlled group of corporations includes component members which join in the filing of a consolidated return and other component members which do not join in filing such return, the component members filing the consolidated return shall be treated as a single corporation for purposes of this subparagraph.

(3) A controlled group may not adopt an apportionment plan, as provided in § 1.1561–3, with respect to the amounts computed under the provisions of this paragraph.

(4) The provisions of this paragraph may be illustrated by the following example:

Example. A controlled group is composed of four component member corporations, W, X, Y, and Z. Each corporation files a separate income tax return on the basis of a calendar year. The sum of the earnings and profits for the taxable year ending December 31, 1975, which are retained plus the sum of the accumulated earnings and profits (as of the close of the preceding taxable year) is $15,000, $75,000, $37,500, and $300,000 for W, X, Y, and Z, respectively. The amounts determined under this paragraph for W, X, Y, and Z for 1975 are $15,000, $48,750, $37,500, and $48,750, respectively, computed as follows:

	Component members			
	W	X	Y	Z
Earnings and profits	$15,000	$75,000	$37,500	$300,000
Amount computed under subparagraph (1)	37,500	37,500	37,500	37,500
Excess	22,500	0	0	0
Allocation of excess		7,500	7,500	7,500
New excess			7,500	
Reallocation of new excess		3,750		3,750
Amount to be used for purposes of section 535(c)(2) and (3)	15,000	48,750	37,500	48,750

(d) *Small business deduction of life insurance companies.* (1) Except as provided in subparagraph (2) of this paragraph, if two or more life insurance companies which are taxable under section 802 are component members of a controlled group of corporations on a December 31, the amount for purposes of computing the limitation on the small business deduction under sections 804(a)(4) and 809(d)(10) of such corporations for their taxable years which include such December 31 shall be an amount equal to $25,000 divided by the

number of life insurance companies taxable under section 802 which are component members of such group on such December 31.

(2) If, with respect to any of the component members of the controlled group which are described in subparagraph (1) of this paragraph, the amount determined under such subparagraph exceeds 10 percent of such member's investment yield (as defined in section 304(c)), then any such excess shall be subtracted from the amount determined under subparagraph (1) of this paragraph with respect to such member and shall be divided equally among those remaining life insurance company members of the controlled group that do not have such an excess (until no such excess remains to be divided among those remaining members that have not had such an excess). The excess so divided among such remaining members shall be added to the amount determined under subparagraph (1) with respect to such members.

(3) A controlled group may not adopt an apportionment plan, as provided in §1.1561–3, with respect to the amounts computed under the provisions of this paragraph.

(e) *Certain short taxable years.* (1) If the return of a corporation is for a short period which does not include a December 31, and such corporation is a component member of a controlled group of corporations with respect to such short period, then for purposes of subtitle A of the Code:

(i) The surtax exemption under section 11(d) of such corporation for such short period shall be an amount equal to $25,000 ($50,000 in the case of a taxable year ending in 1975), divided by the number of corporations which are component members of such controlled group on the last day of such short period;

(ii) The amount to be used in computing the accumulated earnings credit under section 535(c) (2) and (3) of such corporation for such short period shall be an amount equal to $150,000 divided by the number of corporations which are members of such controlled group on the last day of such short period; and

(iii) The amount to be used in computing the limitation on the small business deduction of life insurance companies under sections 804(a)(4) and 809(d)(10) of such corporation for such short period shall not exceed an amount equal to $25,000 divided by the number of life insurance companies taxable under section 802 which are component members of the controlled group on the last day of such short period.

For purposes of the preceding sentence, the term ''short period'' does not include any period if the income for such period is required to be included in a consolidated return under §1.1502–76. The determination of whether a corporation is a component member of a controlled group of corporations on the last day of a short period is made by applying the definition of ''component member'' contained in section 1563(b) and §1.1563–1 as if the last day of such short period were a December 31 occurring after December 31, 1974.

(2) The provisions of this paragraph may be illustrated by the following examples:

Example (1). On January 2, 1975, corporation X transfers cash to newly formed corporation Y (which begins business on that date) and receives all of the stock of Y in return. X also owns all of the stock of corporation Z on each day of 1974 and 1975. X uses the calendar year as its taxable year and Z uses a fiscal year ending on March 31. Y adopts a fiscal year ending on June 30 as its annual accounting period, and, therefore, files a return for the short taxable year beginning on January 2, 1975, and ending on June 30, 1975. On June 30, 1975, Y is a component member of a parent-subsidiary controlled group of corporations of which X, Y, and Z are component members. Accordingly, the surtax exemption of Y for the short taxable year ending on June 30, 1975, is $16,666.67 ($50,000÷3). On December 31, 1975, X, Y, and Z are component members of a parent-subsidiary controlled group of corporations. Accordingly, the surtax exemption of each such corporation for its taxable year including December 31, 1975 (i.e., X's calendar year ending December 31, 1975, Z's fiscal year ending March 31, 1976, and Y's fiscal year ending June 30, 1976) is $16,666.67 ($50,000÷3), or, if an apportionment plan is filed under §1.1561–3, the amount apportioned pursuant to such plan.

Example (2). On January 1, 1975, corporation P owns all of the stock of corporations S–1, S–2, and S–3. P, S–1, S–2, and S–3 file separate returns on a calendar year basis. On July 31, 1975, S–1 is liquidated and therefore

files a return for the short taxable year beginning on January 1, 1975, and ending on July 31, 1975. On August 31, 1975, S–2 is liquidated and therefore files a return for the short taxable year beginning on January 1, 1975, and ending on August 31, 1975. On July 31, 1975, S–1 is a component member of a parent-subsidiary controlled group of corporations of which P, S–1, S–2, and S–3 are component members. Accordingly, the surtax exemption under section 11(d) of S–1 for the short taxable year ending on July 31, 1975, is $12,500 ($50,000÷4). On August 31, 1975, S–2 is a component member of a parent-subsidiary controlled group of corporations of which P, S–2, and S–3 are component members. Accordingly, the surtax exemption of S–2 for the short taxable year ending on August 31, 1975, is $16,666.67 ($50,000÷3). On December 31, 1975, P and S–3 are component members of a parent-subsidiary controlled group of corporations. Accordingly, the surtax exemption of each such corporation for the calendar year 1975 is $25,000 ($50,000÷2), or, if an apportionment plan is filed under §1.1561–3, the amount apportioned pursuant to such plan.

[T.D. 7528, 42 FR 64695, Dec. 28, 1977]

§ 1.1561–3 Apportionment of surtax exemption.

(a) *In general.* (1) In the case of corporations which are component members of a controlled group of corporations on a December 31, the single $50,000 surtax exemption under section 11(d) may be apportioned among such members (for the taxable year of each such member which includes such December 31) if all such members consent, in the manner provided in paragraph (b) of this section, to an apportionment plan with respect to such December 31. Such plan shall provide for the apportionment of a fixed dollar amount to one or more of such members, but in no event shall the sum of the amounts so apportioned exceed $50,000. An apportionment plan shall not be considered as adopted with respect to a particular December 31 until each component member which is required to consent to the plan under paragraph (b)(1) of this section filed the original of a statement described in such paragraph (or, the original of a statement incorporating its consent is filed on its behalf). In the case of a return filed before a plan is adopted, the surtax exemption for purposes of such return shall be equally apportioned in accordance with the rules provided in §1.1561–2(a)(1)(i). (If a valid apportionment plan is adopted after the return is filed and within the time prescribed by subparagraph (2) of this paragraph, such return should be amended (or a claim for refund should be made) to reflect the change from equal apportionment.)

(2) A controlled group may adopt an apportionment plan with respect to a particular December 31 only if, at the time such plan is sought to be adopted, there is at least one year remaining in the statutory period (including any extensions thereof) for the assessment of a deficiency against any corporation the tax liability of which would be increased by the adoption of such plan. If there is less than one year remaining with respect to any such corporation, the director of the service center with which such corporation files its income tax return will ordinarily, upon request, enter into an agreement to extend such statutory period for the limited purpose of assessing any deficiency against such corporation attributable to the adoption of such apportionment plan.

(3)(i) The amount apportioned to a component member of a controlled group of corporations in an apportionment plan adopted with respect to a particular December 31 shall constitute such member's surtax exemption for its taxable year including the particular December 31, and for all taxable years of such members including succeeding December 31's, unless the apportionment plan is amended in accordance with paragraph (c) of this section or is terminated under subdivision (ii) of this subparagraph. Thus, the apportionment plan (including any amendments thereof) has a continuing effect and need not be renewed annually.

(ii) If an apportionment plan is adopted with respect to a particular December 31, such plan shall terminate with respect to a succeeding December 31, if:

(*a*) The controlled group ceases to remain in existence during the calendar year ending on such succeeding December 31,

(b) Any corporation which was a component member of such group on the particular December 31 is not a component member of such group on such succeeding December 31, or

(c) Any corporation which was not a component member of such group on the particular December 31 is a component member of such group on such succeeding December 31.

An apportionment plan, once terminated with respect to a December 31, is no longer effective. Accordingly, unless a new apportionment plan is adopted, the surtax exemption of the component members of the controlled group for their taxable years which include such December 31 and all December 31's thereafter will be determined in accordance with the rules provided in paragraph (a)(1)(i) of § 1.1561–2.

(iii) For purposes of subdivision (ii) *(a)—(a)* A parent-subsidiary controlled group of corporations shall be considered as remaining in existence as long as its common parent corporation remains as a common parent.

(b) A brother-sister controlled group of corporations shall be considered as remaining in existence as long as the requirements of paragraph (a)(3)(i) of § 1.1563–1 continue to be satisfied with respect to at least two corporations, taking into account the stock ownership of only those five or fewer persons whose stock ownership was taken into account at the time the apportionment plan adopted by the component members of such group first became effective.

(*c*) A combined group of corporations shall be considered as remaining in existence as long as the brother-sister controlled group of corporations referred to in paragraph (a)(4)(i) of § 1.1563–1 in respect of such combined group remains in existence (within the meaning of (*b*) of this subdivision), and at least one such corporation is a common parent of a parent-subsidiary controlled group of corporations referred to in such paragraph (a)(4)(i).

(*d*) If, by reason of paragraph (a)(5)(i) of § 1.1563–1, two or more insurance companies subject to taxation under section 802 are treated as an insurance group separate from any corporations which are members of a controlled group described in paragraph (a) (2), (3), or (4) of § 1.1563–1, such insurance group shall be considered as remaining in existence as long as the controlled group described in paragraph (a) (2), (3), or (4) of such section, as the case may be, remains in existence (within the meaning of (*a*), (*b*), or (*c*) of this subdivision), and there are at least two insurance companies which satisfy the requirements of paragraph (a)(5)(i) of such section.

(iv) If an apportionment plan is terminated with respect to a particular December 31 by reason of an occurrence described in subdivision (ii) (*b*) or (*c*) of this subparagraph, each corporation which is a component member of the controlled group on such particular December 31 should, on or before the date it files its income tax return for the taxable year which includes such particular December 31, notify the service center with which it files such return of such termination. If an apportionment plan is terminated with respect to a particular December 31 by reason of an occurrence described in subdivision (ii)(*a*) of this subparagraph, each corporation which was a component member of the controlled group on the preceding December 31 should, on or before the date it files its income tax return for the taxable year which includes such particular December 31, notify the service center with which it files such return of such termination.

(b) *Consents to plan.* (1)(i) The consent of a component member (other than a wholly-owned subsidiary) to an apportionment plan with respect to a particular December 31 shall be made by means of a statement, signed by any person who is duly authorized to act on behalf of the consenting member, stating that such member consents to the apportionment plan with respect to such December 31. The statement shall set forth in the name, address, taxpayer account number, and taxable year of the consenting component member, the amount apportioned to such member under the plan, and the service center where the original of the statement is to be filed. The consent of more than one component member may be incorporated in a single statement. The original of a statement of consent shall be filed with the service center with which the component member of the group on such December 31 which has the taxable year ending first on or after such date filed its return for such

taxable year. (If two or more component members have the same such taxable year, a statement of consent may be filed with the service center with which the return for any such taxable year is filed.) The original of a statement of consent shall have attached thereto information (referred to in this paragraph as ''group identification'') setting forth the name, address, taxpayer account number, and taxable year of each component member of the controlled group on such December 31 (including wholly-owned subsidiaries) and the amount apportioned to each such member under the plan. If more than one original statement is filed, a statement may incorporate the group identification by reference to the name, address, taxpayer account number, and taxable year of a component member of the group which has attached such group identification to the original of its statement.

(ii) Each component member of the group on such December 31 (other than wholly-owned subsidiaries) should attach a copy of its consent (or a copy of the statement incorporating its consent) to the income tax return, amended return, or claim for refund filed with its service center for the taxable year including such date. Such copy shall either have attached thereto information on group identification or shall incorporate such information by reference to the name, address, taxpayer account number, and taxable year of a component member of the group which has attached such information to its income tax return, amended return, or claim for refund filed with the same service center for the taxable year including such date.

(2)(i) Each component member of a controlled group which is a wholly-owned subsidiary of such group with respect to a December 31 shall be deemed to consent to an apportionment plan with respect to such December 31, provided each component member of the group which is not a wholly-owned subsidiary consents to the plan. For purposes of this section, a component member of a controlled group shall be considered to be a wholly-owned subsidiary of the group with respect to a December 31 if, on each day preceding such date during its taxable year which includes such date, all of its stock is owned directly by one or more corporations which are component members of the group on such December 31.

(ii) Each wholly-owned subsidiary of a controlled group with respect to a December 31 should attach a statement containing the information which is required to be set forth in a statement of consent to an apportionment plan with respect to such December 31 to the income tax return, amended return, or claim for refund filed with its service center for the taxable year which includes such date. Such statement should either have attached thereto information on group identification or incorporate such information by reference to the name, address, taxpayer account number, and taxable year of a component member of the group which has attached such information to its income tax return, amended return, or claim for refund filed with the same service center for the taxable year including such date.

(c) *Amendment of plan.* An apportionment plan adopted with respect to a December 31 by a controlled group of corporations may be amended with respect to such December 31, or with respect to any succeeding December 31 for which the plan is effective under paragraph (a)(3) of this section. An apportionment plan must be amended with respect to a particular December 31 and the amendments to the plan shall be effective only if adopted in accordance with the rules prescribed in this section for the adoption of an original plan with respect to such December 31.

(d) *Component members filing consolidated returns.* If the component members of a controlled group of corporations on a December 31 include corporations which join in the filing of a consolidated return, the corporations filing the consolidated return shall be treated as a single component member for purposes of this section. Thus, for example, only one consent, executed by

the common parent, to an apportionment plan filed pursuant to this section is required on behalf of the component members filing the consolidated return.

[T.D. 7528, 42 FR 64697, Dec. 28, 1977; 43 FR 4603, Feb. 3, 1978]

§ 1.1562–0 Effective date.

The provisions of §§ 1.1562–1 through 1.1562–7 apply only to taxable years beginning before January 1, 1975.

(Secs. 1561(a), (83 Stat. 599; 26 U.S.C. 1561 (a)) and 7805 (68A Stat. 917; 26 U.S.C. 7805, of the Internal Revenue Code))

[T.D. 7528, 42 FR 64702, Dec. 28, 1977]

§ 1.1562–1 Privilege of controlled group to elect multiple surtax exemptions.

(a) *Election*—(1) *In general.* (i) Under section 1562(a)(1) a controlled group of corporations has the privilege of electing to have each of its component members make its returns without regard to section 1561 (relating to single surtax exemption in the case of a controlled group of corporations). The election shall be made with respect to a particular December 31 and shall be valid only if each corporation which is required to consent to the election under the provisions of paragraph (a)(1) of § 1.1562–3 gives its consent in the manner and within the time prescribed in such section. An election shall not be considered as made with respect to a particular December 31 until each corporation which is required to consent to the election under paragraph (c)(1) of § 1.1562–3 files the original of a statement described in such paragraph (or, the original of a statement incorporating its consent is filed on its behalf). Accordingly, for purposes of returns filed before an election is made, the surtax exemption of component members of a controlled group of corporations shall be determined in accordance with section 1561 and the regulations thereunder. (If a valid election is made after the return is filed and within the time prescribed in § 1.1562–3, such return should be amended (or a claim for refund should be made) to reflect the change in the amount of the surtax exemption (and the imposition of the additional tax) resulting from the election.)

(ii) An election once made with respect to a particular December 31 may not thereafter be withdrawn unless such election is terminated with respect to such December 31 in accordance with the provisions of section 1562(c) and § 1.1562–2.

(iii) An election under section 1562(a)(1) may be made by a controlled group of corporations with respect to any December 31 (after December 31, 1962), unless:

(a) A component member of such group on such December 31 joins, or is required to join, in the filing of a consolidated return for its taxable year which includes such date, or

(b) Such controlled group is not eligible to make an election with respect to such December 31 by reason of section 1562(d).

See also section 243(b)(3)(A), relating to effect of election of 100-percent dividends received deduction, which may prevent a controlled group from making an election under section 1562(a)(1) with respect to a particular December 31.

(2) *Years for which effective.* (i) A valid election under section 1562(a)(1) by a controlled group of corporations with respect to a particular December 31 is effective with respect to:

(a) The taxable year of each component member of such group on such December 31 which includes such December 31, and

(b) Any succeeding taxable year of any corporation which is a component member of such group (or a successor group) on a succeeding December 31 included within any such succeeding taxable year.

Under section 1562(c) and § 1.1562–2, an election under section 1562(a)(1) may be terminated with respect to a December 31 referred to in either (a) or (b) of this subdivision. For years affected by termination, see paragraph (c) of § 1.1562–2.

(ii) For the application of an election under section 1562(a)(1) to certain short taxable years not including a December 31, see section 1562(f)(2) and § 1.1562–6.

(iii) The provisions of this subparagraph may be illustrated by the following example:

Example. Corporation P is the common parent of a parent-subsidiary controlled group of corporations of which corporations P, S–1, and S–2 are component members on December 31, 1964. On December 31, 1965, the controlled group of corporations consists of the same component members as on December 31, 1964, except that corporation S–3 is also a component member on December 31, 1965. On December 31, 1966, the controlled group of corporations consists of the same component members as on December 31, 1965, except that S–1 is no longer a component member on December 31, 1966. In January 1965, the controlled group makes a valid election under section 1562(a)(1) with respect to December 31, 1964. Under subdivision (i)*(a)* of this subparagraph, the election (unless terminated) is effective with respect to the taxable years of P, S–1, and S–2 which include December 31, 1964. Under subdivision (i)*(b)* of this subparagraph, the election (unless terminated) is also effective with respect to the taxable years of P, S–1, S–2, and S–3 which include December 31, 1965, and with respect to the taxable years of P, S–2, and S–3 which include December 31, 1966.

(b) *Effect of election*—(1) *General*. If an election under section 1562(a)(1) is effective with respect to a taxable year of a corporation, then:

(i) Section 1561 shall not apply to such corporation for such taxable year, but

(ii) The additional tax imposed by section 1562(b) shall apply to such corporation for such taxable year (except as otherwise provided in subparagraph (3) of this paragraph).

(2) *Additional tax*. The additional tax imposed by section 1562(b) is an amount equal to 6 percent of so much of a corporation's taxable income for the taxable year as does not exceed the amount of such corporation's surtax exemption for such taxable year. However, if a corporation computes its tax under section 1201 (relating to alternative tax) and is subject to the additional tax imposed by section 1562(b) for such taxable year, the additional tax applies only to an amount equal to the taxable income reduced by the excess of the net long-term capital gain over the net short-term capital loss for such taxable year (to the extent such amount does not exceed the amount of such corporation's surtax exemption for such taxable year).

(3) *Exceptions*. The additional tax imposed by section 1562(b) shall not apply to a corporation for any taxable year if:

(i) Such corporation is the only component member of a controlled group on the December 31 included within such taxable year which has taxable income for the taxable years including such date, or

(ii) Such corporation's surtax exemption is disallowed for such year under any provision of the Code. For purposes of this subdivision, if the component members of a controlled group of corporations on a December 31 are limited in the aggregate to a single $25,000 surtax exemption for their taxable years which include such date, then the surtax exemption of each such component member shall be considered to be disallowed for such taxable year regardless of how the $25,000 is allocated among such members. For example, if pursuant to the authority provided in section 269(b), the Commissioner allocates a single $25,000 surtax exemption equally between two corporations which are the only component members of an electing controlled group of corporations, the surtax exemption of each such corporation shall be considered to be disallowed.

The application of this subparagraph in respect of a taxable year of a component member of a controlled group of corporations does not constitute the termination of an election made under section 1562(a)(1). Accordingly, such election continues in effect for the subsequent taxable years of such corporation and the other corporations which are component members of the controlled group, unless the election is terminated under section 1562(c).

(4) *Taxable income defined*. For purposes of this paragraph, the term ''taxable income'' means:

(i) In the case of a corporation subject to tax under section 511(a) (relating to tax on unrelated business income of charitable, etc., organizations at corporation rates), its ''unrelated business taxable income'' (as defined in section 512),

(ii) In the case of a life insurance company, its ''life insurance company taxable income'' (as defined in section 802(b)),

(iii) In the case of a regulated investment company, its ''investment company taxable income'' (as defined in section 852(b)(2)),

(iv) In the case of a real estate investment trust, its ''real estate investment trust taxable income'' (as defined in section 857(b)(2)), and

(v) In the case of an electing small business corporation, its ''taxable income'' (as defined in section 1373(d)).

(5) *Tax treated as imposed by section 11, etc.* For purposes of applying other sections of the Code, if for a taxable year a corporation is subject to both the tax imposed by section 11 and to the additional tax imposed by section 1562(b), then the additional tax is treated as if it were imposed by section 11. If a corporation is subject to a tax imposed by any section of chapter 1 of the Code other than section 11 but such tax is computed by reference to section 11, the additional tax is treated for purposes of the Code as imposed by such other section. (For example, the tax imposed by section 831(a) is ''computed as provided in section 11''; therefore if a corporation is subject to both the tax imposed by section 831(a) and the additional tax imposed by section 1562(b) for any taxable year, the additional tax is treated as imposed by section 831(a) for such taxable year.) Accordingly, the credits against the tax imposed by chapter 1 of the Code allowable, for example, under sections 38 (relating to credit against tax for investment in certain depreciable property) and 33 (relating to credit for taxes of foreign countries and possessions of the United States) may be applied against the additional tax.

(6) *Special rules.* For purposes of sections 244 (relating to dividends received on certain preferred stock), 247 (relating to dividends paid on certain preferred stock of public utilities), 804 (a)(3) (relating to deduction for partially tax-exempt interest in the case of a life insurance company), and 922 (relating to special deduction for Western Hemisphere trade corporations), the normal tax rate referred to in such sections shall be determined without regard to the additional tax imposed by section 1562(b). For example, in the case of a corporation subject to the additional tax imposed by section 1562(b) for its taxable year ending December 31, 1965, the percentage computed under section 244(a)(2)(B) for such taxable year would be 48 percent.

[T.D. 6845, 30 FR 9744, Aug. 5, 1965, as amended by T.D. 6960, 33 FR 9302, June 25, 1968; T.D. 7181, 37 FR 8067, Apr. 25, 1972]

§ 1.1562–2 Termination of election.

(a) *In general.* An election under section 1562(a)(1) is terminated by any one of the occurrences described in paragraph (b) of this section. For years affected by termination, see paragraph (c) of this section.

(b) *Methods of termination*—(1) *Consent of the members.* An election may be terminated with respect to a particular December 31 by consent of the component members of a controlled group of corporations. A termination by consent shall be made with respect to a particular December 31 and shall be valid only if each corporation which is required to consent to the termination under paragraph (a)(1) of § 1.1562–3 gives its consent in the manner and within the time prescribed in such section. A termination by consent shall not be considered as made with respect to a particular December 31 until each corporation which is required to consent to the termination under paragraph (c)(1) of § 1.1562–3 files the original of a statement described in such paragraph (or, the original of a statement incorporating its consent is filed on its behalf).

(2) *Refusal by new member to consent.* (i) If on a December 31 a controlled group of corporations which has made an election under section 1562(a)(1) includes a new member which files a statement that it does not consent to the election with respect to such December 31, then such election shall terminate with respect to such date. Such statement shall be signed by any person who is duly authorized to act on behalf of the new member, and shall be attached to the income tax return of such new member for its taxable year which includes such December 31, filed on or before the date prescribed by law (including extensions of time) for the filing of such return. The statement shall set forth the name, address, taxpayer account number, and taxable year of each corporation which was a

component member of the controlled group on such December 31. In the event of a termination under this subparagraph, each component member of the controlled group on such December 31 (other than such new member) should, within 30 days after such new member files the statement of refusal to consent, file notification of the termination with the district director with whom it filed (or will file) an income tax return for its taxable year which includes such December 31.

(ii) For purposes of subdivision (i) of this subparagraph, a corporation shall be considered to be a new member of a controlled group of corporations on a December 31 if such corporation:

(a) Is a component member of such group on such December 31, and

(b) Was not a member of such group on the January 1 immediately preceding such December 31.

(3) *Consolidated returns.* (i) If any corporation which is a component member of a controlled group of corporations on a December 31 joins, or is required to join, in the filing of a consolidated return for its taxable year which includes such date, then an election under section 1562(a)(1) which is effective with respect to preceding taxable years of component members of the group shall terminate with respect to such December 31. In the event of a termination under this subparagraph, each component member of the controlled group on such December 31 which does not join in the filing of a consolidated return for the taxable year which includes such date, should, within 30 days after such consolidated return is filed, file notification of the termination with the district director with whom it filed (or will file) an income tax return for its taxable year which includes such December 31.

(ii) The provisions of this subparagraph may be illustrated by the following example:

Example. On each day of 1964 and 1965, Brown, an individual, owns all the stock of corporations M and P. Corporation P, in turn, owns all the stock of corporation S. Each corporation files a separate return for its taxable year ending on December 31, 1964. On April 30, 1965, the controlled group of corporations consisting of M, P, and S makes an election under section 1562(a)(1) with respect to December 31, 1964. On March 15, 1966, P and S join in the filing of a consolidated return for their taxable years ending December 31, 1965, and M files a separate return for its taxable year ending on such date. Under this subparagraph, the election by the controlled group with respect to December 31, 1964, is terminated with respect to December 31, 1965. On or before April 14, 1966, M should file notification of the termination with the district director with whom it filed its income tax return for 1965.

(4) *Controlled group no longer in existence.* If a controlled group of corporations is considered as going out of existence with respect to a particular December 31 under paragraph (b) of § 1.1562–5, and if there is no successor group in respect of such controlled group under the rules provided in paragraph (c) of such section, then an election under section 1562(a)(1) with respect to such controlled group shall terminate with respect to such December 31.

(c) *Effect of termination.* A termination under subparagraph (1), (2), (3), or (4) of paragraph (b) of this section is effective with respect to the December 31 referred to in such subparagraph. An election, once terminated, is no longer effective. Thus, a termination is effective with respect to the taxable year of each component member of a controlled group of corporations which includes such December 31 and with respect to all succeeding taxable years of each corporation which is a component member of such group (or a successor group). Moreover, after a termination, the controlled group (and any successor group) may not make a new election except as provided in section 1562(d) and § 1.1562–4.

[T.D. 6845, 30 FR 9745, Aug. 5, 1965]

§ 1.1562–3 Consents to election and termination.

(a) *Consents required*—(1) *General.* An election under paragraph (a)(1) of § 1.1562–1, or a termination by consent under paragraph (b)(1) of § 1.1562–2, may be made by a controlled group of corporations with respect to a particular December 31 only if each corporation, which was a component member of such group (or a successor group) on any December 31 falling within the period beginning on the particular December 31 and ending on the most recently past December 31, consents to

the election or termination within the time prescribed in paragraph (b) of this section and in the manner prescribed in paragraph (c) of this section. Such election or termination may be made with respect to a particular December 31 whether or not the electing or terminating group ceases to remain in existence under the principles of paragraph (a) of §1.1562–5 before such election or termination is made. In the case of an election with respect to December 31, 1963, if each corporation which is required to consent to the election under the rules provided in Treasury Decision 6733, approved May 11, 1964 (29 FR 6320, C.B. 1964–1 (Part 1), 635) gives its consent in the manner provided in such Treasury Decision before December 31, 1964, then a valid election under section 1562(a)(1) shall be considered to have been made with respect to December 31, 1963.

(2) *Examples*. The provisions of subparagraph (1) of this paragraph may be illustrated by the following examples:

Example (1). P Corporation is the common parent of a parent-subsidiary controlled group of which corporations P, S–1, and S–2 are component members on December 31, 1965. On December 31, 1966, the controlled group consists of the same component members as on December 31, 1965, except that S–1 is no longer a component member on December 31, 1966. On December 31, 1967, the controlled group of corporations consists of the same component members as on December 31, 1966, except that corporation S–3 is also a component member on December 31, 1967. In January 1968, the controlled group desires to make an election under section 1562(a)(1) with respect to December 31, 1965. Such election may be made only if P, S–1 (even though S–1 was not a component member of the group on December 31, 1966, or December 31, 1967), S–2, and S–3 (even though S–3 was not a component member of the group on December 31, 1965, or December 31, 1966) consent to the election.

Example (2). Assume the same facts as in example (1) and further assume that in January 1968, the controlled group makes a valid election with respect to December 31, 1965. If, in July 1968, the controlled group desires to terminate the election with respect to December 31, 1966, P, S–2, and S–3 must consent to the termination.

(b) *Time for consents*—(1) *Consents to election*. The consent of each component member of a controlled group of corporations which is required with respect to an election for a particular December 31, shall be made at any time after such December 31 and before the expiration of 3 years after the date on which the income tax return, for the taxable year of the component member of the group on such December 31 which has the taxable year ending first on or after such date, is required to be filed (determined without regard to any extensions of time for the filing of such return). See section 1562(e)(1).

(2) *Consents to termination*. The consent of each component member of a controlled group of corporations which is required with respect to a termination for a particular December 31, shall be made at any time after such December 31 and before the expiration of 3 years after such date. See section 1562(e)(2).

(3) *Examples*. The provisions of this paragraph may be illustrated by the following examples:

Example (1). The component members of a controlled group of corporations on December 31, 1965, consist of 2 calendar-year corporations, X and Y. The group desires to make an election under section 1562(a)(1) with respect to December 31, 1965. Under subparagraph (1) of this paragraph, the required consents to the election must be made after December 31, 1965, and on or before March 15, 1969. The result is the same whether or not X or Y (or both) ceases to be a component member of the group after December 31, 1965, and whether or not X or Y (or both) is granted an extension of time for the filing of its income tax return for 1965.

Example (2). Assume the same facts as in example (1) except that X files its income tax return on the basis of a fiscal year ending January 31, and Y files its income tax return on the basis of a fiscal year ending on June 30. Under subparagraph (1) of this paragraph, the last day on which the required consents may be made with respect to an election for December 31, 1965, is April 15, 1969.

Example (3). Assume the same facts as in example (1) or (2) except that an election under section 1562(a)(1) is effective for X's and Y's taxable years including December 31, 1965. Assume further that the group desires to terminate the election with respect to December 31, 1965. Under subparagraph (2) of this paragraph, the required consents to the termination must be made after December 31, 1965, and on or before December 31, 1968.

(c) *Manner of consenting*—(1) *General rule*. (i) The consent of a corporation to an election or termination with respect to a particular December 31 (other than

a corporation which is a wholly-owned subsidiary in respect of such election or termination) shall be made by means of a statement, signed by any person who is duly authorized to act on behalf of the consenting corporation, stating that such corporation consents to an election or termination (as the case may be) with respect to such December 31. Such statement shall set forth the name, address, and taxpayer account number of the consenting member and the internal revenue district where the original of the statement is to be filed. The consent of more than one component member may be incorporated in a single statement. The original of a statement of consent shall be filed with the district director with whom the component member of the group on the particular December 31 which has the taxable year ending first on or after such date filed its return for such taxable year. (If two or more component members have the same such taxable year, a statement of consent may be filed with the district director with whom the return for any such taxable year is filed.) The original of a statement shall have attached thereto information (referred to in this paragraph as ''group identification'') setting forth the name, address, taxpayer account number, and taxable year of each component member of the controlled group on such December 31 (including wholly-owned subsidiaries). If the particular December 31 is a December 31 other than the December 31 immediately preceding the date on which such statement is filed then, as part of the ''group identification'', the original of the statement shall also set forth the information required in the preceding sentence with respect to each other corporation which was a component member of the group (or a successor group) on any December 31 occurring after the particular December 31 on which the consenting corporation was a component member of such group. If more than one original statement is filed, a statement may incorporate the group identification by reference to the name, address, taxpayer account number, and taxable year of a component member of the group which has attached such group identification to the original of its statement.

(ii) Each corporation which was a component member of the electing (or terminating) controlled group (or a successor group) on a December 31 falling within the period beginning on the particular December 31 and ending on the most recently past December 31 (other than a wholly-owned subsidiary in respect of such election or termination) should attach a copy of its consent (or a copy of the statement incorporating its consent) to each income tax return, amended return, or claim for refund filed with its district director for a taxable year which includes any such December 31. Such copy should either have attached thereto information on group identification or incorporate such information by reference to the name, address, taxpayer account number, and taxable year of a component member of the group which has attached such information to its income tax return, amended return, or claim for refund filed with the same district director for a taxable year which includes any such December 31.

(2) *Wholly-owned subsidiaries.* (i) Each corporation which is a wholly-owned subsidiary of a controlled group of corporations in respect of an election or termination with respect to a particular December 31 shall be deemed to consent to such election or termination (as the case may be). For purposes of this section, a corporation shall be considered to be a wholly-owned subsidiary of a controlled group in respect of an election or termination with respect to a particular December 31 if, on each day falling within the period beginning on the first day of such corporation's taxable year which included such December 31 and ending on the day on which such election or termination is made (or, if such corporation was not in existence on each day of such period, on each day falling within such period during which the corporation was in existence), all the stock of such corporation is owned directly by one or more corporations which are component members of such group (or a successor group) on any December 31 falling within such period.

(ii) Each wholly-owned subsidiary should attach a statement to an income tax return, amended return, or claim for refund filed with its district

director for each taxable year which contains a December 31 falling within the period described in the last sentence of subdivision (i) of this subparagraph, stating that an election or termination (as the case may be) is effective for such taxable year and containing the information which would be required to be set forth in a statement of consent to the election or termination filed pursuant to subparagraph (1)(i) of this paragraph. Information on group identification may either be attached to the statement or incorporated by reference to the name, address, taxpayer account number, and taxable year of a component member of the group which has attached such group identification to an income tax return, amended return, or claim for refund filed with the same district director for the taxable year including such date.

(d) *Effect of consent*. Under section 1562(e), any consent to an election under section 1562(a)(1) or a termination under section 1562(c)(1) is deemed to be a consent to the application of section 1562(g)(1) (relating to tolling of statute of limitations on assessment of deficiencies). See § 1.1562–7.

[T.D. 6845, 30 FR 9746, Aug. 5, 1965]

§ 1.1562–4 Election after termination.

(a) *In general*. Under section 1562(d), if a controlled group of corporations has made a valid election under section 1562(a)(1), and such election is terminated by any one of the occurrences described in paragraph (b) of § 1.1562–2, then such group (or any controlled group which is a successor to such group within the meaning of paragraph (c) of § 1.1562–5) is not eligible to make an election under section 1562(a)(1) with respect to any December 31 before the sixth December 31 after the particular December 31 with respect to which such termination was effective. For the particular December 31 with respect to which a termination is effective, see paragraph (c) of § 1.1562–2.

(b) *Example*. The provisions of this section may be illustrated by the following example:

Example. In 1965, a controlled group of corporations makes a valid election under section 1562(a)(1) with respect to December 31, 1964. In 1967, the election is terminated with respect to December 31, 1964, by consent pursuant to paragraph (b)(1) of § 1.1562–2. The group (or any successor group) is not eligible to make another election with respect to any December 31 before December 31, 1970 (i.e., the sixth December 31 after December 31, 1964, the particular December 31 with respect to which such termination was effective). If in this example the election had been terminated with respect to December 31, 1965, instead of December 31, 1964, the group (or any successor group) would not be eligible to make another election with respect to any December 31 before December 31, 1971.

[T.D. 6845, 30 FR 9747, Aug. 5, 1965]

§ 1.1562–5 Continuing and successor controlled groups.

(a) *Controlled group continuing in existence*. For purposes of §§ 1.1561–3 and 1.1562–1 through 1.1562–4:

(1) *Parent-subsidiary group*. A parent-subsidiary controlled group of corporations shall be considered as remaining in existence as long as (i) such group is not considered, under paragraph (c)(3) of this section, to be a successor controlled group in respect of another controlled group, and (ii) its common parent corporation remains as a common parent and satisfies the requirements of paragraph (a)(2)(i)*(b)* of § 1.1563–1 with respect to the ownership of stock of at least one corporation.

(2) *Brother-sister group*. A brother-sister controlled group of corporations shall be considered as remaining in existence as long as the requirements of paragraph (a)(3)(i) of § 1.1563–1 continue to be satisfied with respect to at least two corporations, taking into account the stock ownership of only those five or fewer persons whose stock ownership was taken into account with respect to the election under section 1562(a)(1).

(3) *Combined group*. A combined group of corporations shall be considered as remaining in existence as long as (i) the brother-sister controlled group of corporations referred to in paragraph (a)(4)(i) of § 1.1563–1 in respect of such combined group remains in existence (within the meaning of subparagraph (2) of this paragraph), and (ii) at least one such corporation is a common parent of a parent-subsidiary controlled group of corporations referred to in such paragraph (a)(4)(i).

(4) *Insurance group.* If, by reason of paragraph (a)(5)(i) of §1.1563–1, two or more insurance companies subject to taxation under section 802 are treated as an insurance group separate from any corporations which are members of a controlled group described in paragraph (a) (2), (3), or (4) of §1.1563–1, such insurance group shall be considered as remaining in existence as long as (i) the controlled group described in paragraph (a) (2), (3), or (4) of such section, as the case may be, remains in existence (within the meaning of subparagraph (1), (2), or (3) of this paragraph), and (ii) there are at least two insurance companies which satisfy the requirements of paragraph (a)(5)(i) of such section.

(b) *Controlled group no longer in existence*—(1) *General.* Except as provided in subparagraph (3) of this paragraph, a controlled group of corporations is considered as going out of existence with respect to a December 31 if such group ceases to remain in existence under the principles of paragraph (a) of this section during the calendar year ending on such date.

(2) *Examples.* The provisions of subparagraph (1) of this paragraph may be illustrated by the following examples, in which each corporation referred to uses the calendar year as its taxable year:

Example (1). Corporation P was organized on January 1, 1964, and acquired all the stock of corporation S–1 on February 1, 1964, and all the stock of corporation S–2 on March 1, 1965. On April 1, 1965, P sold all its S–1 stock to the public. Beginning on February 1, 1964, P is the common parent corporation of a parent-subsidiary controlled group of corporations. Under paragraph (a)(1) of this section, the controlled group remains in existence throughout the remainder of 1964 and throughout 1965 even though after April 1, 1965, P satisfies the stock ownership requirements of paragraph (a)(2)(i) *(b)* of §1.1563–1 only with respect to the stock of S–2, a corporation which was not a member of the group at the time the group was formed, and even though S–1 ceased to be a member of the group after the group was formed. Accordingly, if the controlled group makes a valid election under section 1562(a)(1) with respect to December 31, 1964, such election will remain in effect with respect to December 31, 1965, unless terminated under section 1562(c) (1), (2), or (3). Moreover, if such election were made and subsequently terminated with respect to December 31, 1964, the group would not be eligible (by reason of section 1562(d)) to make an election under section 1562(a)(1) with respect to December 31, 1965.

Example (2). Assume the same facts as in example (1) except that corporation S–2 is a franchised corporation as defined in section 1563(f)(4) for its 1965 taxable year. On December 31, 1965, S–2 is treated as an excluded member of the parent-subsidiary controlled group of which P is the common parent. See section 1563(b)(2)(E). Nevertheless, such controlled group is considered as remaining in existence throughout 1965.

Example (3). Assume the same facts as in example (1) except that P sold its S–1 stock on February 28, 1965, instead of April 1, 1965. Under the principles of paragraph (a)(1) of this section, the parent-subsidiary controlled group ceases to remain in existence on February 28, 1965. Accordingly, under subparagraph (1) of this paragraph, such group is considered as going out of existence with respect to December 31, 1965. Thus, if the group makes a valid election under section 1562(a)(1) with respect to December 31, 1964, such election terminates with respect to December 31, 1965. Moreover, the new controlled group of corporations consisting of P and S–2 is not precluded (by reason of section 1562(d)) from making an election under section 1562(a)(1) with respect to December 31, 1965.

Example (4). Smith, an individual, owns 80 percent of the only class of stock of corporations W and X on each day of 1966 and 1967. W, in turn, owns 80 percent of the only class of stock of corporation Y on each day of 1966. On April 15, 1967, X purchases 80 percent of the only class of corporation Z and on April 30, 1967, W sells all its stock in Y. Under paragraph (a)(3) of this section, the combined group remains in existence throughout 1966 and 1967 since (i) the brother-sister controlled group of corporations referred to in paragraph (a)(4)(i) of §1.1563–1 in respect of such combined group remains in existence, and (ii) at least one corporation is a common parent of a parent-subsidiary controlled group referred to in such paragraph.

Example (5). Assume the same facts as in example (4) except that Y and Z are life insurance companies subject to taxation under section 802 of the Code. Further assume that throughout 1966 and 1967 Y owns all the stock of corporation S, and Z owns all the stock of corporation T. S and T are life insurance companies subject to taxation under section 802. Before April 15, 1967, under paragraph (a)(5)(i) of §1.1563–1, Y and S are treated as an insurance group of corporations. After April 30, 1967, under paragraph (a)(4) of this section, Z and T are treated as an insurance group which remains in existence throughout 1966 and 1967, since the combined group remains in existence within the meaning of paragraph (a)(3) of this section throughout 1966 and 1967, and there are at all

times at least two insurance companies which satisfy the requirements of paragraph (a)(5)(i) of § 1.1563–1. (However, after April 30, 1967, Y and S cease to be members of the combined group and are considered to be a new controlled group of corporations.)

Example (6). Jones, an individual, owns all the stock of corporations M and N on each day of 1966. On February 1, 1967, he gives all the stock of M to his 18-year-old son who continues to hold the M stock throughout the remainder of 1967. Since Jones (or his son) owns, or is considered as owning under paragraph (b)(6)(i) of § 1.1563–3, all the stock of M and N on each day of 1967, under paragraph (a)(2) of this section the brother-sister controlled group consisting of M and N remains in existence throughout 1967.

(3) *Special rule.* If:

(i) Under subparagraph (1) of this paragraph, a controlled group of corporations would (without regard to this subparagraph) be considered as going out of existence with respect to a December 31 because two or more corporations cease to be members of such group during the calendar year ending on such date,

(ii) Under paragraph (c) of this section, there is no successor group in respect of such group, and

(iii) At least two of such corporations are considered to be component members of such group on such December 31 by reason of the additional member rule of paragraph (b)(3) of § 1.1563–1,

then such group shall be considered as going out of existence with respect to the December 31 immediately succeeding such December 31. For example, assume that corporations P and S file their returns on the basis of the calendar year. P owns all the stock of S from January 1, 1965, through December 1, 1965. On December 2, 1965, P sells the stock of S to the public. Under subparagraph (1) of this paragraph the controlled group consisting of P and S would (without regard to this subparagraph) be considered as going out of existence with respect to December 31, 1965, because P and S ceased to be members of the group on December 2, 1965. However, since there is no successor group in respect of the controlled group, and P and S are considered to be component members of such group on December 31, 1965, by reason of the additional member rule of paragraph (b)(3) of § 1.1563–1, under this subparagraph the group is considered as going out of existence with respect to December 31, 1966, and not December 31, 1965.

(c) *Successor groups*—(1) *Transactions involving a former owner or owners.* If, as a result of the transfer of stock of a corporation or corporations (whether by sale, exchange, distribution, contribution to capital, or otherwise), a controlled group (''old group'') goes out of existence, and a new controlled group (''new group'') comes into existence, then the new group shall be considered to be a successor to the old group, provided one of the following applies:

(i) A person or persons who own stock of the new group that meets the more-than-50-percent stock ownership requirement of section 1563(a)(2)(B) owned stock which met such stock ownership requirement with respect to the old group;

(ii) A person or persons who owned more than 50 percent of the fair market value of the stock of the common parent of the old group owns, with respect to the new group, stock that meets the more-than-50-percent stock ownership requirement of section 1563(a)(2)(B); or

(iii) A person or persons who owned stock that met the more-than-50-percent stock ownership requirement of section 1563(a)(2)(B) with respect to the old group owns more than 50 percent of the fair market value of the stock of the common parent of the new group.

For purposes of this paragraph, the term ''owns'' includes direct ownership and ownership with the application of the rules contained in paragraph (b) of § 1.1563–3. For purposes of this subparagraph, if as a result of the transfer of stock, a parent-subsidiary controlled group or a brother-sister controlled group becomes a part of a combined group, then such parent-subsidiary or brother-sister group shall be considered as going out of existence as a result of such transfer. Also for purposes of this subparagraph, if as a result of the transfer of stock, a combined group goes out of existence and a parent-subsidiary or brother-sister group which was part of such combined group remains, then such parent-subsidiary or brother-sister group shall be considered to be a new controlled group which

came into existence as a result of such transfer.

(2) *Examples*. The principles of subparagraph (1) of this paragraph may be illustrated by the following examples:

Example (1). On each day of 1971, unrelated individuals Grey, Black, and Green own the following amounts of the only class of outstanding stock of each of corporations R and T: Grey owns 40 percent, Black owns 40 percent, and Green owns 20 percent. On March 1, 1972, Grey sells all his stock in both corporations to unrelated individual Clay. As a result of the transfer, the brother-sister controlled group consisting of R and T goes out of existence. Since Black and Green, who owned stock which met the more-than-50-percent stock ownership requirement of section 1563(a)(2)(B) with respect to the old group, owns stock of the new group (consisting of R and T) that meets the more-than-50-percent stock ownership requirement of section 1563(a)(2)(B), the new group is considered to be the successor to the old group. If Green also sold all his stock in both corporations to unrelated individual Barnes, Black would be the only stockholder of the new group whose stock ownership was taken into account in meeting the more-than-50-percent stock ownership requirement of section 1563(a)(2)(B) with respect to the old group. Since Black would not own stock of the new group that meets the more-than-50-percent stock ownership requirement of section 1563(a)(2)(B), the new group would not be considered a successor to the controlled group which went out of existence.

Example (2). On each day of 1971, all the outstanding stock of corporation P is owned in the following manner: Smith owns 30 percent, Jones owns 30 percent, and White owns 40 percent. P owns all the stock of corporation S_1, S_2, W_1 and W_2. On December 31, 1971, P, S_1, S_2, W_1, and W_2 are component members of the same controlled group. If on March 1, 1972, P distributes all the stock of S_1 and S_2 equally to Smith and Jones and all the stock of W_1 and W_2 to White, the controlled group consisting of P, S_1, S_2, W_1, and W_2 goes out of existence. Since Smith and Jones, who together owned stock which met the more-than-50-percent stock ownership requirement of section 1563 (a)(2)(B) with respect to the old group, now together own stock of the new group (consisting of S_1 and S_2) that meets the more-than-50-percent stock ownership requirement of section 1563(a)(2)(B), such new group is considered the successor to the old group. On the other hand, since White, the sole shareholder of W_1 and W_2, did not own stock which met such stock ownership requirement with respect to the old group, the new group consisting of W_1 and W_2 is not considered a successor of the old group.

(3) *Transactions involving two common parents*. If, as a result of the transfer of stock of a corporation or corporations (whether by sale, exchange, distribution, contribution to capital, or otherwise):

(i) A parent-subsidiary controlled group of corporations goes out of existence because its common parent corporation ceases to be a common parent, and

(ii) The stockholders (immediately before the transfer) of such common parent corporation, as a result of owning stock in such common parent, own (immediately after the transfer) more than 50 percent of the fair market value of the stock of a corporation which is the common parent corporation of a controlled group of corporations immediately after the transfer,

the resulting controlled group shall be considered to be a successor group in respect of the controlled group which went out of existence as a result of the transfer.

(4) *Example*. The provisions of subparagraph (3) of this paragraph may be illustrated by the following example:

Example. Corporation Y, the common parent of a parent-subsidiary controlled group, acquires the assets of corporation X, the common parent of another controlled group, in a statutory merger. The stockholders of X exchange their X stock for 60 percent of the fair market value of all of the outstanding shares of Y. Since, as a result of the exchange, (i) the parent-subsidiary controlled group of which X was the common parent goes out of existence because X ceases to be a common parent, and (ii) the stockholders of X, as a result of owning stock in X, own immediately after the exchange more than 50 percent of the fair market value of the stock of Y (the common parent of a controlled group of corporations immediately after the exchange), the controlled group of which Y is the common parent after the merger is considered to be a successor group in respect of the controlled group of which X was the common parent, and the group of which Y was the common parent before the merger is considered, under paragraph (a)(1) of this section, as no longer in existence. Thus, for example, if before the merger the controlled group of which X was the common parent was not eligible, by reason of the application of section 1562(d), to make an election under section 1562(a)(1) with respect to a December 31 occurring before December 31, 1970, then the successor controlled group would also be ineligible to make an election with respect

to a December 31 occurring before December 31, 1970, whether or not the controlled group of which Y was the common parent before the merger had an election in effect pursuant to section 1562(a)(1).

[T.D. 6845, 30 FR 9747, Aug. 5, 1965, as amended by T.D. 7181, 37 FR 8067, Apr. 25, 1972]

§ 1.1562–6 Election for short taxable years.

(a) *Application of election to short taxable years*—(1) *General*. If the return of a corporation is for a short period which does not include a December 31, and if such corporation is a component member of a controlled group of corporations with respect to such short period, then an election under section 1562(a)(1) by such group shall apply with respect to such short period if:

(i) Such election is in effect with respect to both the December 31, immediately preceding such short period (hereinafter in this section referred to as the ''preceding December 31'') and the December 31 immediately succeeding such short period (hereinafter in this section referred to as the ''succeeding December 31''), or

(ii) Such election is in effect with respect to either the preceding December 31 or the succeeding December 31, and each corporation which is a component member of such group with respect to a short period falling between such dates consents to the application of such election to such short period. See subparagraph (4) of this paragraph for rules relating to an election with respect to certain short taxable years ending during 1964.

(2) *Component members*. For purposes of this section, the determination of whether a corporation is a component member of a controlled group of corporations with respect to a short period shall be made by applying the definition of component member contained in section 1563(b) and paragraph (b) of § 1.1563–1 as if the last day of such short period were a December 31 occurring after December 31, 1963.

(3) *Example*. The provisions of this paragraph may be illustrated by the following example:

Example. On December 31, 1964, corporations P, S–1, and S–2 are component members of a parent-subsidiary controlled group of corporations. P, S–1, and S–2 each uses the calendar year as its taxable year. On February 1, 1965, S–1 transfers property to newly formed corporation S–3 (which begins business on that date) and receives all the stock of S–3 in return. S–3 adopts a fiscal year ending on November 30 as its taxable year and, therefore, files a return for the short taxable year beginning on February 1, 1965, and ending on November 30, 1965. On December 5, 1965, S–2 is liquidated, and therefore files a return for the short taxable year beginning on January 1, 1965, and ending on December 5, 1965. S–2 and S–3 are component members of the controlled group of corporations with respect to their short taxable years falling between December 31, 1964, and December 31, 1965, within the meaning of subparagraph (2) of this paragraph. Assume that the controlled group has an election under section 1562(a)(1) in effect with respect to either December 31, 1964, or December 31, 1965, but not both such dates. Under subparagraph (1)(ii) of this paragraph, S–2 and S–3 must both file consents to the application of the section 1562(a)(1) election with respect to their short periods in order for the election to be effective with respect to either such short period.

(4) *Election for certain short taxable years ending during 1964*. If:

(i) A corporation is a component member of a controlled group of corporations with respect to a short taxable year beginning and ending in 1964,

(ii) Each corporation which was a component member of such group on December 31, 1963 (determined without regard to paragraph (b)(2)(iii) of § 1.1563–1, relating to the treatment of a corporation which has a taxable year ending on December 31, 1963, as an excluded member of a controlled group on such date) filed its income tax return on the basis of the calendar year ending on such date, and

(iii) Such controlled group of corporations is considered as going out of existence with respect to December 31, 1964, pursuant to paragraph (b)(4) of § 1.1562–2,

then, for purposes of paragraph (a)(1)(ii) of this section, an election by such controlled group under section 1562(a)(1) shall be deemed to have been in effect for the preceding December 31. Each corporation which is a component member of such group with respect to a short period falling between such preceding and succeeding December 31's must, on or before November 3, 1965, consent to the application of such election to its short period falling between such December 31's.

(b) *Status at time of filing return.* If, on the date a corporation files its income tax return for a short period falling between a preceding and succeeding December 31 (with respect to which period it is a component member of a controlled group of corporations):

(1) *Election not effective.* An election under section 1562(a)(1) is not effective with respect to either such preceding or succeeding December 31, then such member shall determine its surtax exemption for purposes of such return in accordance with section 1561(b).

(2) *Election effective for preceding December 31.* An election under section 1562(a)(1) is effective with respect to such preceding December 31, and if on the date the return is filed the election has not been terminated with respect to such succeeding December 31, then such member may compute its tax for purposes of such return on the assumption that the conditions of paragraph (a)(1)(i) of this section are satisfied with respect to such short period.

(3) *Election effective for preceding or succeeding December 31.* An election under section 1562(a)(1) is effective with respect to either (but not both) such preceding or succeeding December 31, and the return is filed after such succeeding December 31, then the member's surtax exemption for purposes of such return shall be determined in accordance with section 1561(b) unless:

(i) It attaches to such return its consent to the application of such election to such short period, and

(ii) Each other corporation which is a component member of the group with respect to a short period falling between such December 31's files, within 30 days after such return is filed, a consent to the application of such election to its short period falling between such December 31's.

(c) *Election or termination after returns filed*—(1) *Election.* If, after each component member of a controlled group with respect to a short period falling between a preceding and succeeding December 31 files its return for such short period, the group makes an election under section 1562(a)(1) with respect to such succeeding December 31, then the election shall apply with respect to each such short period only if each such member files, within 30 days after such election is made, a consent to the application of such election to its short period.

(2) *Termination.* If, after each component member of a controlled group with respect to a short period falling between a preceding and succeeding December 31 files its return for such short period, an election under section 1562(a)(1) which is effective with respect to such group with respect to such preceding December 31 is terminated with respect to such succeeding December 31, then such election shall apply with respect to each such short period only if each such member files, within 30 days after the termination occurs, a consent to the application of such election to its short period. For purposes of the preceding sentence, (i) the termination of an election by consent under section 1562(c)(1) shall be considered to occur on the date the termination is made, and (ii) the termination of an election under section 1562(c) (2), (3), or (4) shall be considered to occur on the date the event causing termination occurs (for example, on the date a new member files a refusal to consent, or on the date a consolidated return is filed) unless the election is made after such date, in which case the termination shall be considered to occur on the date the election is made.

(d) *Manner of consenting.* A consent referred to in paragraph (b)(3) or (c) of this section shall be made by means of a statement, signed by any person who is duly authorized to act on behalf of the consenting corporation, stating that such corporation consents to the application of an election under section 1562(a)(1) with respect to its short period. Each such statement shall set forth the name, address, taxpayer account number, and taxable year of (1) each corporation which is a component member of the electing controlled group with respect to a short period falling between the preceding December 31 and the succeeding December 31, and (2) each corporation which is a component member of such group on either the preceding or succeeding December 31. Each consenting corporation shall file such statement with the district director with whom it files (or

filed) its income tax return for the short period.

[T.D. 6845, 30 FR 9749, Aug. 5, 1965]

§ 1.1562–7 Extension of statutory periods of limitation.

(a)(1) Under section 1562(g)(1), the statutory period for assessment of any deficiency against a corporation which is a component member of a controlled group of corporations with respect to any taxable year, to the extent such deficiency is attributable to an election under section 1562(a)(1) or a termination by consent under section 1562(c)(1), shall not expire before the expiration of one year after the date such election or termination is made.

(2) Under section 1562(g)(2), the statutory period for allowing or making credit or refund of any overpayment of tax by a corporation which is a component member of a controlled group of corporations with respect to any taxable year, to the extent such overpayment is attributable to an election under section 1562(a)(1) or a termination by consent under section 1562(c)(1), shall not expire before the expiration of one year after the date such election or termination is made.

(b) For purposes of this section, the deficiency or overpayment in tax attributable to an election under section 1562(a)(1) or a termination by consent under section 1562(c)(1) shall be that amount of the increase or decrease in tax over the amount previously determined (as defined in section 1314(a)) for any taxable year which results from the application or nonapplication of section 1562, as the case may be. In determining the amount of such increase or decrease, due regard shall be given to the effect of any change in the amount of the surtax exemption (or the application or nonapplication of the additional tax under section 1562(b)) on credits allowable for any taxable year. Thus, for example, as a result of such change it may be necessary to recompute the amount of the investment credit allowable under section 38 for a taxable year for which the election or termination is effective and for other taxable years affected, or treated as affected, by an investment credit carryback or carryover (as defined in section 46(b)) determined with reference to the taxable years with respect to which such election or termination is effective.

(c) The provisions of this section shall not be construed to:

(1) Shorten the period within which an assessment of a deficiency may otherwise be made or the credit or refund of an overpayment may otherwise be allowed or made, or

(2) Apply to a deficiency or overpayment for a taxable year if the tax liability for such taxable year has been compromised under section 7122, or is the subject of a closing agreement under section 7121.

[T.D. 6845, 30 FR 9750, Aug. 5, 1965]

§ 1.1563–1 Definition of controlled group of corporations and component members.

(a) *Controlled group of corporations*—(1) *In general.* For purposes of sections 1561 through 1563 and the regulations thereunder, the term ''controlled group of corporations'' means any group of corporations which is either a ''parent-subsidiary controlled group'' (as defined in subparagraph (2) of this paragraph), a ''brother-sister controlled group'' (as defined in subparagraph (3) of this paragraph), a ''combined group'' (as defined in subparagraph (4) of this paragraph), or an ''insurance group'' (as defined in subparagraph (5) of this paragraph). For the exclusion of certain stock for purposes of applying the definitions contained in this paragraph, see section 1563(c) and § 1.1563–2.

(2) *Parent-subsidiary controlled group.* (i) The term ''parent-subsidiary controlled group'' means one or more chains of corporations connected through stock ownership with a common parent corporation if:

(a) Stock possessing at least 80 percent of the total combined voting power of all classes of stock entitled to vote or at least 80 percent of the total value of shares of all classes of stock of each of the corporations, except the common parent corporation, is owned (directly and with the application of paragraph (b)(1) of § 1.1563–3, relating to options) by one or more of the other corporations; and

(b) The common parent corporation owns (directly and with the application of paragraph (b)(1) of § 1.1563–3, relating

to options) stock possessing at least 80 percent of the total combined voting power of all classes of stock entitled to vote or at least 80 percent of the total value of shares of all classes of stock of at least one of the other corporations, excluding, in computing such voting power or value, stock owned directly by such other corporations.

(ii) The definition of a parent-subsidiary controlled group of corporations may be illustrated by the following examples:

Example (1). P Corporation owns stock possessing 80 percent of the total combined voting power of all classes of stock entitled to vote of S Corporation. P is the common parent of a parent-subsidiary controlled group consisting of member corporations P and S.

Example (2). Assume the same facts as in example (1). Assume further that S owns stock possessing 80 percent of the total value of shares of all classes of stock of T Corporation. P is the common parent of a parent-subsidiary controlled group consisting of member corporations P, S, and T. The result would be the same if P, rather than S, owned the T stock.

Example (3). L Corporation owns 80 percent of the only class of stock of M Corporation and M, in turn, owns 40 percent of the only class of stock of O Corporation. L also owns 80 percent of the only class of stock of N Corporation and N, in turn, owns 40 percent of the only class of stock of O. L is the common parent of a parent-subsidiary controlled group consisting of member corporations L, M, N, and O.

Example (4). X Corporation owns 75 percent of the only class of stock of Y and Z Corporations; Y owns all the remaining stock of Z; and Z owns all the remaining stock of Y. Since intercompany stockholdings are excluded (that is, are not treated as outstanding) for purposes of determining whether X owns stock possessing at least 80 percent of the voting power or value of at least one of the other corporations, X is treated as the owner of stock possessing 100 percent of the voting power and value of Y and of Z for purposes of subdivision (i)*(b)* of this subparagraph. Also, stock possessing 100 percent of the voting power and value of Y and Z is owned by the other corporations in the group within the meaning of subdivision (i)*(a)* of this subparagraph. (X and Y together own stock possessing 100 percent of the voting power and value of Z, and X and Z together own stock possessing 100 percent of the voting power and value of Y.) Therefore, X is the common parent of a parent-subsidiary controlled group of corporations consisting of member corporations X, Y, and Z.

(3) *Brother-sister controlled group.* (i) The term ''brother-sister controlled group'' means two or more corporations if the same five or fewer persons who are individuals, estates, or trusts own (directly and with the application of the rules contained in paragraph (b) of § 1.1563–3) stock possessing:

(a) At least 80 percent of the total combined voting power of all classes of stock entitled to vote or at least 80 percent of the total value of shares of all classes of the stock of each corporation; and

(b) More than 50 percent of the total combined voting power of all classes of stock entitled to vote or more than 50 percent of the total value of shares of all classes of stock of each corporation, taking into account the stock ownership of each such person only to the extent such stock ownership is identical with respect to each such corporation.

The five or fewer persons whose stock ownership is considered for purposes of the 80 percent requirement must be the same persons whose stock ownership is considered for purposes of the more-than-50 percent requirement.

(ii) The principles of this subparagraph may be illustrated by the following examples:

Example (1). The outstanding stock of corporations P, Q, R, S, and T, which have only one class of stock outstanding is owned by the following unrelated individuals:

CORPORATIONS

Individuals	P	Q	R	S	T	Identical ownership
A	55%	51%	55%	55%	55%	51%.
B	45%	49%	.....	.....	.....	(45% in P & Q).
C	.....	.....	45%	.....	.....	
D	.....	.....	.....	45%	.....	
E	.....	.....	.....	.....	45%	
Total	100%	100%	100%	100%	100%	

Corporations P and Q are members of a brother-sister controlled group of corporations. Although the more-than-50 percent identical ownership requirement is met for all 5 corporations, corporations R, S, and T are not members becasue at least 80 percent of the stock of each of those corporations is not owned by the same 5 or fewer persons

whose stock ownership is considered for purposes of the more-than-50 percent identical ownership requirement.

Example (2). The outstanding stock of corporations U and V, which have only one class of stock outstanding, is owned by the following unrelated individuals:

Individuals	Corporations	
	U (percent)	V (percent)
A	12	12
B	12	12
C	12	12
D	12	12
E	13	13
F	13	13
G	13	13
H	13	13
Total	100	100

Any group of five of the shareholders will own more than 50 percent of the stock in each corporation, in identical holdings. However, U and V are not members of brother-sister controlled group because at least 80 percent of the stock of each corporation is not owned by the same five or fewer persons.

Example (3). Corporation X and Y each have two classes of stock outstanding, voting common and non-voting common. (None of this stock is excluded from the definition of stock under section 1563(c).) Unrelated individuals A and B owns the following percentages of the class of stock entitled to vote (voting) and of the total value of shares of all classes of stock (value) in each of corporations X and Y:

Individuals	Corporations	
	X	Y
A	100% voting, 60% value.	75% voting, 60% value.
B	0% voting, 10% value	25% voting, 10% value.

No other shareholder of X owns (or is considered to own) any stock in Y. X and Y are a brother-sister controlled group of corporations. The group meets the more-than-50 percent ownership requirements because A and B own more than 50 percent of the total value of shares of all classes of stock of X and Y in identical holdings. (The group also meets the more-than-50 percent ownership requirement because of A's voting stock ownership.) The group meets the 80 percent requirement because A and B own at least 80 percent of the total combined voting power of all classes of stock entitled to vote.

Example (4). Assume the same facts as in example (3) except that the value of the stock owned by A and B is not more than 50 percent of the total value of shares of all classes of stock of each corporation in identical holdings. X and Y are not a brother-sister controlled group of corporations. The group meets the more-than-50 percent ownership requirement because A owns more than 50 percent of the total combined voting power of the voting stock of each corporation. For purposes of the 80 percent requirement, B's voting stock in Y cannot be combined with A's voting stock in Y since B, who does not own any voting stock in X, is not a person whose ownership is considered for purposes of the more-than-50 percent requirement. Because no other shareholder owns stock in both X and Y, these other shareholders' stock ownership is not counted towards meeting either the more-than-50 percent ownership requirement or the 80-percent ownership requirement.

(iii) Paragraph (a)(3) of this section, as amended, by T.D. 8179 applies to taxable years ending on or after December 31, 1970. See, however, the transitional rule in paragraph (d) of this section.

(4) *Combined group.* (i) The term ''combined group'' means any group of three or more corporations, if:

(a) Each such corporation is a member of either a parent-subsidiary controlled group of corporations or a brother-sister controlled group of corporations, and

(b) At least one of such corporations is the common parent of a parent-subsidiary controlled group and also is a member of a brother-sister controlled group.

(ii) The definition of a combined group of corporations may be illustrated by the following examples:

Example (1). Smith, an individual, owns stock possessing 80 percent of the total combined voting power of all classes of the stock of corporations X and Y. Y, in turn, owns stock possessing 80 percent of the total combined voting power of all classes of the stock of corporation Z. Since:

(a) X, Y, and Z are each members of either a parent-subsidiary or brother-sister controlled group of corporations, and

(b) Y is the common parent of a parent-subsidiary controlled group of corporations consisting of Y and Z, and also is a member of a brother-sister controlled group of corporations consisting of X and Y,

X, Y, and Z are members of the same combined group.

Example (2).

Example (2). Assume the same facts as in example (1), and further assume that corporation X owns 80 percent of the total value of shares of all classes of stock of corporation T, X, Y, Z, and T are members of the same combined group.

(5) *Insurance group.* (i) The term ''insurance group'' means two or more insurance companies subject to taxation under section 802 each of which is a member of a controlled group of corporations described in subparagraph (2), (3), or (4) of this paragraph. Such insurance companies shall be treated as a controlled group of corporations separate from any other corporations which are members of the controlled group described in such subparagraph (2), (3), or (4). For purposes of this section and § 1.1562–5, the common parent of the controlled group described in subparagraph (2) of this paragraph shall be referred to as the common parent of the insurance group.

(ii) The definition of an insurance group may be illustrated by the following example:

Example. Corporation P owns all the stock of corporation I which, in turn, owns all the stock of corporation X. P also owns all the stock of corporation Y which, in turn, owns all the stock of corporation J. I and J are life insurance companies subject to taxation under section 802 of the Code. Since I and J are members of a parent-subsidiary controlled group of corporations, such companies are treated as members of an insurance group separate from the parent-subsidiary controlled group consisting of P, X, and Y. For purposes of this section and § 1.1562–5, P is referred to as the common parent of the insurance group even though P is not a member of such group.

(6) *Voting power of stock.* For purposes of § 1.1562–5, this section, and §§ 1.1563–2 and 1.1563–3, in determining whether the stock owned by a person (or persons) possesses a certain percentage of the total combined voting power of all classes of stock entitled to vote of a corporation, consideration will be given to all the facts and circumstances of each case. A share of stock will generally be considered as possessing the voting power accorded to such share by the corporate charter, by-laws, or share certificate. On the other hand, if there is any agreement, whether express or implied, that a shareholder will not vote his stock in a corporation, the formal voting rights possessed by his stock may be disregarded in determining the percentage of the total combined voting power possessed by the stock owned by other shareholders in the corporation, if the result is that the corporation becomes a component member of a controlled group of corporations. Moreover, if a shareholder agrees to vote his stock in a corporation in the manner specified by another shareholder in the corporation, the voting rights possessed by the stock owned by the first shareholder may be considered to be possessed by the stock owned by such other shareholder if the result is that the corporation becomes a component member of a controlled group of corporations.

(b) *Component members*—(1) *In general.* For purposes of sections 1561 through 1563 and the regulations thereunder, a corporation is a component member of a controlled group of corporations on a December 31 (and with respect to the taxable year which includes such December 31) if such corporation:

(i) Is a member of such controlled group on such December 31 and is not treated as an excluded member under subparagraph (2) of this paragraph, or

(ii) Is not a member of such controlled group on such December 31 but is treated as an additional member under subparagraph (3) of this paragraph.

(2) *Excluded members.* (i) A corporation, which is a member of a controlled group of corporations on the December 31 included within its taxable year, but was a member of such group for less than one-half of the number of days in such taxable year which precede such December 31, shall be treated as an excluded member of such group on such December 31.

(ii) A corporation which is a member of a controlled group of corporations on any December 31 shall be treated as an excluded member of such group on such date if, for its taxable year including such date, such corporation is:

(a) Exempt from taxation under section 501(a) (except a corporation which has unrelated business taxable income for such taxable year which is subject to tax under section 511) or 521,

(b) A foreign corporation not subject to taxation under section 882(a) for the taxable year,

(c) An electing small business corporation (as defined in section 1371(b)) not subject to the tax imposed by section 1378,

(d) A franchised corporation (as defined in section 1563(f)(4) and § 1.1563–4), or

(e) An insurance company subject to taxation under section 802 or 821, except that an insurance company taxable under section 802 which (without regard to this subdivision) is a component member of an insurance group described in paragraph (a)(5) of this section shall not be treated as an excluded member of such insurance group.

(iii) A corporation which has a taxable year ending on December 31, 1963, shall be treated as an excluded member of a controlled group on such date.

(3) *Additional members.* A corporation which:

(i) Is not a member of a controlled group of corporations on the December 31 included within its taxable year, and

(ii) Is not described, with respect to such taxable year, in subparagraph (2)(ii) *(a)*, *(b)*, *(c)*, *(d)*, or *(e)*, or (2)(iii) of this paragraph,

shall be treated as an additional member of such group on such December 31 if it was a member of such group for one-half (or more) of the number of days in such taxable year which precede such December 31.

(4) *Examples.* The provisions of this paragraph may be illustrated by the following examples:

Example (1). Brown, an individual, owns all of the stock of corporations W and X on each day of 1964. W and X each uses the calendar year as its taxable year. On January 1, 1964, Brown also owns all the stock of corporation Y (a fiscal year corporation with a taxable year beginning on July 1, 1964, and ending on June 30, 1965), which stock he sells on October 15, 1964. On December 31, 1964, Brown purchases all the stock of corporation Z (a fiscal year corporation with a taxable year beginning on September 1, 1964, and ending on August 31, 1965). On December 31, 1964, W, X, and Z are members of the same controlled group. However, the component members of the group on such December 31 are W, X, and Y. Under subparagraph (2)(i) of this paragraph, Z is treated as an excluded member of the group on December 31, 1964, since Z was a member of the group for less than one-half of the number of days (29 out of 121 days) during the period beginning on September 1, 1964 (the first day of its taxable year) and ending on December 30, 1964. Under subparagraph (3) of this paragraph, Y is treated as an additional member of the group on December 31, 1964, since Y was a member of the group for at least one-half of the number of days (107 out of 183 days) during the period beginning on July 1, 1964 (the first day of its taxable year) and ending on December 30, 1964.

Example (2). On January 1, 1964, corporation P owns all the stock of corporation S, which in turn owns all the stock of corporation S–1. On November 1, 1964, P purchases all of the stock of corporation X from the public and sells all of the stock of S to the public. Corporation X owns all the stock of corporation Y during 1964. P, S, S–1, X, and Y file their returns on the basis of the calendar year. On December 31, 1964, P, X, and Y are members of a parent-subsidiary controlled group of corporations; also, corporations S and S–1 are members of a different parent-subsidiary controlled group on such date. However, since X and Y have been members of the parent-subsidiary controlled group of which P is the common parent for less than one-half the number of days during the period January 1 through December 30, 1964, they are not component members of such group on such date. On the other hand, X and Y have been members of a parent-subsidiary controlled group of which X is the common parent for at least one-half the number of days during the period January 1 through December 30, 1964, and therefore they are component members of such group on December 31, 1964. Also since S and S–1 were members of the parent-subsidiary controlled group of which P is the common parent for at least one-half the number of days in the taxable years of each such corporation during the period January 1 through December 30, 1964, P, S, and S–1 are component members of such group on December 31, 1964.

Example (3). Throughout 1964, corporation M owns all the stock of corporation F which, in turn, owns all the stock of corporations L–1, L–2, X, and Y. M is a domestic mutual insurance company subject to taxation under section 821, F is a foreign corporation not engaged in trade or business within the United States, L–1 and L–2 are domestic life insurance companies subject to taxation under section 802, and X and Y are domestic corporations subject to tax under section 11 of the Code. Each corporation uses the calendar year as its taxable year. On December 31, 1964, M, F, L-1, L-2, X, and Y are members of a parent-subsidiary controlled group of corporations. However, under subparagraph (2)(ii) of this paragraph, M, F, L–1, and L–2 are treated as excluded members of the group on December 31, 1964. Thus, on December 31, 1964, the component members of the parent-subsidiary controlled group of which M is the common parent include only X and Y. Furthermore, since subparagraph (2)(ii)*(e)* of this paragraph does not result in L–1 and L–2 being treated as excluded members of an insurance group, L–1 and L–2 are component members of an insurance group on December 31, 1964.

(5) *Application of constructive ownership rules.* For purposes of subparagraphs (2)(i) and (3) of this paragraph, it is necessary to determine whether a corporation was a member of a controlled group of corporations for one-half (or more) of the number of days in its taxable year which precede the December 31 falling within such taxable year. Therefore, the constructive ownership rules contained in paragraph (b) of § 1.1563–3 (to the extent applicable in making such determination) must be applied on a day-by-day basis. For example, if P Corporation owns all the stock of X Corporation on each day of 1964, and on December 30, 1964, acquires an option to purchase all the stock of Y Corporation (a calendar-year taxpayer which has been in existence on each day of 1964), the application of paragraph (b)(1) of § 1.1563–3 on a day-by-day basis results in Y being a member of the brother-sister controlled group on only one day of Y's 1964 year which precedes December 31, 1964. Accordingly, since Y is not a member of such group for one-half or more of the number of days in its 1964 year preceding December 31, 1964, Y is treated as an excluded member of such group on December 31, 1964.

(c) *Overlapping groups*—(1) *In general.* If on a December 31 a corporation is a component member of a controlled group of corporations by reason of ownership of stock possessing at least 80 percent of the total value of shares of all classes of stock of the corporation, and if on such December 31 such corporation is also a component member of another controlled group of corporations by reason of ownership of other stock (that is, stock not used to satisfy the at-least-80-percent total value test) possessing at least 80 percent of the total combined voting power of all classes of stock of the corporation entitled to vote, then such corporation shall be treated as a component member only of the controlled group of which it is a component member by reason of the ownership of at least 80 percent of the total value of its shares.

(2) *Brother-sister controlled groups.* (i) If on a December 31, a corporation would, without application of this subparagraph, be a component member of more than one brother-sister controlled group on such date, such corporation shall be treated as a component member of only one such group on such date. Such a corporation may select which group in which it is to be included by filing an election as provided in this subparagraph. The election shall be in the form of a statement designating the group in which the corporation is to be included. The statement shall provide all the information with respect to stock ownership which is reasonably necessary to satisfy the Internal Revenue officer with whom it is filed that the corporation would, but for the election, be a component member of more than one controlled group. Once filed, the election is irrevocable and effective until such time that a change in the stock ownership of the corporation results in termination of membership in the controlled group in which such corporation has been included.

(ii) Except as provided in subdivision (iii) of this subparagraph, the statement shall be signed by a person duly authorized to act on behalf of such corporation and shall be filed on or before the due date (including extension of time) for the filing of the income tax return of such corporation for the taxable year. However, in the case of an election with respect to December 31, 1970, the statement shall be considered as timely filed if filed on or before December 15, 1971. In the event no election is filed in accordance with the provisions of this subdivision, then the district director with audit jurisdiction of such corporation's return for the taxable year which includes such December 31 shall determine the group in which such corporation is to be included, and such determination shall be binding for all subsequent years unless the corporation files a valid election with respect to any such subsequent year.

(iii) If more than one corporation would, without application of this subparagraph, be a component member of more than one controlled group, a single statement shall be signed by persons duly authorized to act on behalf of each such corporation. Such statement shall designate the group in which each corporation is to be included. The

statement shall be attached to the income tax return of the corporation that, among those corporations which would (without the application of this subparagraph) belong to more than one group, has the taxable year including such December 31 which ends on the earliest date. However, in the case of an election with respect to December 31, 1970, the statement may be filed by December 15, 1971, with the service center director with whom such corporation's return is filed for the taxable year which includes such December 31. In the event no election is filed in accordance with the provisions of this subdivision, then the district director with audit jurisdiction of such corporation's return for the taxable year that includes such December 31 shall determine the group in which each corporation is to be included, and such determination shall be binding for all subsequent years unless the corporations file a valid election with respect to any such subsequent year.

(iv) The provisions of this subparagraph may be illustrated by the following examples (in which it is assumed that all the individuals are unrelated):

Example (1). On each day of 1970 all the outstanding stock of corporations M, N, and P is held in the following manner:

Individuals	Corporations		
	M	N	P
A	55%	40%	5%
B	40%	20%	40%
C	5%	40%	55%

Since the more-than-50-percent stock ownership requirement of section 1563(a)(2)(B) is met with respect to corporations M and N and with respect to corporations N and P, but not with respect to corporations M, N, and P, corporation N would, without the application of this subparagraph, be a component member on December 31, 1970, of overlapping groups consisting of M and N and of N and P. If N does not file an election in accordance with subdivision (ii) of this subparagraph, the district director with audit jurisdiction of N's return will determine the group in which N is to be included.

Example (2). On each day of 1970, all the outstanding stock of corporations S, T, W, X, and Z is held in the following manner:

Individuals	Corporations				
	S	T	W	X	Z
D	52%	52%	52%	52%	52%
E	40%	2%	2%	2%	2%
F	2%	40%	2%	2%	2%
G	2%	2%	40%	2%	2%
H	2%	2%	2%	40%	2%
I	2%	2%	2%	2%	40%

On December 31, 1970, the more-than-50-percent stock ownership requirement of section 1563(a)(2)(B) may be met with regard to any combination of the corporations but all five corporations cannot be included as component members of a single controlled group because the inclusion of all the corporations in a single group would be dependent upon taking into account the stock ownership of more than five persons. Therefore, if the corporations do not file a statement in accordance with subdivision (iii) of this subparagraph, the district director with audit jurisdiction of the return of the corporation whose taxable year ends on the earliest date will determine the group in which each corporation is to be included. The corporations or the district director, as the case may be, may designate that three corporations be included in one group and two corporations in another, or that any four corporations be included in one group and that the remaining corporation not be included in any group.

(d) *Transitional rules*—(1) *In general*. Treasury decision 8179 amended paragraph (a)(3) of this section to revise the definition of a brother-sister controlled group of corporations. In general, those amendments are effective for taxable years ending on or after December 31, 1970.

(2) *Limited nonretroactivity*. (i) Under the authority of section 7805(b), the Internal Revenue Service will treat an old group as a brother-sister controlled group corporations for purposes of applying sections 401, 404(a), 408(k), 409A, 410, 411, 412, 414, 415, and 4971 of the Code and sections 202, 203, 204, and 302 of the Employment Retirement Income Security Act of 1974 (ERISA) in a plan year or taxable year beginning before March 2, 1988. To the extent necessary to prevent an adverse effect on any old member (or any other corporation), or on any plan or other entity described in such sections (including plans, *etc.*, of corporations not part of such old group), that would result solely from the retroactive effect of the amendment to this section by T.D. 8179. An

adverse effect includes the disqualification of a plan or the disallowance of a deduction or credit for a contribution to a plan. The Internal Revenue Service, however, will not treat an old member as a member of an old group to the extent that such treatment will have an adverse effect on that old member.

(ii) Section 7805(b) will not be applied pursuant to paragraph (d)(2)(i) of this section to treat an old member of an old group as a member of a brother-sister controlled group to prevent an adverse effect for a taxable year if, for that taxable year, that old member treats or has treated itself as not being a member of that old group for purposes of section 401, 404(a), 408(k), 409A, 410, 411, 412, 414, 415, and 4971 of the Code and sections 202, 203, 204, and 302 and title IV of ERISA for such taxable year (such as by filing, with respect to such taxable year, a return, amended return, or claim for credit or refund in which the amount of any deduction, credit, limitation, or tax due is determined by treating itself as not being a member of the old group for purposes of those sections). However, the fact that one or more (but not all) of the old members do not qualify for section 7805(b) treatment because of the preceding sentence will not preclude that old member (or members) from being treated as a member of the old group under paragraph (d)(2)(i) of this section in order to prevent the disallowance of a deduction or credit of another old member (or other corporation) or to prevent the disqualification of, or other adverse effect on, another old member's plan (or other entity) described in the sections of the Code and ERISA enumerated in such paragraph.

(3) *Election of general nonretroactivity.* In the case of a taxable year ending on or after December 31, 1970, and before March 2, 1988. An old group will be treated as a brother-sister controlled group of corporations for all purposes of the Code for such taxable year if—

(i) Each old member files a statement consenting to such treatment for such taxable year with the District Director having audit jurisdiction over its return within six months after March 2, 1988, and

(ii) No old member (A) files or has filed, with respect to such taxable year, a return, amended return, or claim for credit or refund in which the amount of any deduction, credit, limitation, or tax due is determined by treating any old member as not a member of the old group or (B) treats the employees of all members of the old group as not being employed by a single employer for purposes of sections 401, 404(a), 408(k), 409A, 410, 411, 412, 414, 415, and 4971 of the Code and sections 202, 203, 204, and 302 of ERISA for such taxable year.

(4) *Definitions.* For purposes of this paragraph (d) of this section—

(i) An ''old group'' is a brother-sister controlled group of corporations, determined by applying paragraph (a)(3) of this section as in effect before the amendments made by Treasury decision 8179, that is not a brother-sister controlled group of corporations, determined by applying paragraph (a)(3) of this section as amended by such Treasury decision, and

(ii) An ''old member'' is any corporation that is a member of an old group.

(5) *Election to choose between membership in more than one controlled group.* If—

(i) An old member has filed an election under paragraph (c)(2) of this section to be treated as a component member of an old group for a December 31 before March 2, 1988, and

(ii) That corporation would (without regard to such paragraph) be a component member of more than one brother-sister controlled group (not including an old group) on the December 31, that corporation may make an election under that paragraph by filing an amended return on or before September 2, 1988. This paragraph (d)(5) does not apply to a corporation that is treated as a member of an old group under paragraph (d)(3) of this section.

(6) *Refunds.* See section 6511(a) for period of limitation on filing claims for credit or refund.

[T.D. 6845, 30 FR 9751, Aug. 5, 1965, as amended by T.D. 6960, 33 FR 9302, June 25, 1968; T.D. 7181, 37 FR 8068, Apr. 25, 1972; T.D. 7293, 38 FR 32803, Nov. 28, 1973; T.D. 8179, 53 FR 6612, Mar. 2, 1988; 53 FR 8302, Mar. 14, 1988]

§ 1.1563–2 Excluded stock.

(a) *Certain stock excluded.* For purposes of sections 1561 through 1563 and the regulations thereunder, the term ''stock'' does not include:

(1) Nonvoting stock which is limited and preferred as to dividends, and

(2) Treasury stock.

(b) *Stock treated as excluded stock*—(1) *Parent-subsidiary controlled group.* If a corporation (hereinafter in this paragraph referred to as ''parent corporation'') owns 50 percent or more of the total combined voting power of all classes of stock entitled to vote or 50 percent or more of the total value of shares of all classes of stock in another corporation (hereinafter in this paragraph referred to as ''subsidiary corporation''), the provisions of subparagraph (2) of this paragraph shall apply. For purposes of this subparagraph, stock owned by a corporation means stock owned directly plus stock owned with the application of the constructive ownership rules of paragraph (b)(1) and (4) of § 1.1563–3, relating to options and attribution from corporations. In determining whether the stock owned by a corporation possesses the requisite percentage of the total combined voting power of all classes of stock entitled to vote of another corporation, see paragraph (a)(6) of § 1.1563–1.

(2) *Stock treated as not outstanding.* If the provisions of this subparagraph apply, then for purposes of determining whether the parent corporation or the subsidiary corporation is a member of a parent-subsidiary controlled group of corporations within the meaning of paragraph (a)(2) of § 1.1563–1, the following stock of the subsidiary corporation shall, except as otherwise provided in paragraph (c) of this section, be treated as if it were not outstanding:

(i) *Plan of deferred compensation.* Stock in the subsidiary corporation held by a trust which is part of a plan of deferred compensation for the benefit of the employees of the parent corporation or the subsidiary corporation. The term ''plan of deferred compensation'' shall have the same meaning such term has in section 406(a)(3) and the regulations thereunder.

(ii) *Principal stockholders and officers.* Stock in the subsidiary corporation owned (directly and with the application of the rules contained in paragraph (b) of § 1.1563–3) by an individual who is a principal stockholder or officer of the parent corporation. A principal stockholder of the parent corporation is an individual who owns (directly and with the application of the rules contained in paragraph (b) of § 1.1563–3) 5 percent or more of the total combined voting power of all classes of stock entitled to vote or 5 percent or more of the total value of shares of all classes of stock of the parent corporation. An officer of the parent corporation includes the president, vice-presidents, general manager, treasurer, secretary, and comptroller of such corporation, and any other person who performs duties corresponding to those normally performed by persons occupying such positions.

(iii) *Employees.* Stock in the subsidiary corporation owned (directly and with the application of the rules contained in paragraph (b) of § 1.1563–3) by an employee of the subsidiary corporation if such stock is subject to conditions which substantially restrict or limit the employee's right (or if the employee constructively owns such stock, the direct owner's right) to dispose of such stock and which run in favor of the parent or subsidiary corporation. In general, any condition which extends, directly or indirectly, to the parent corporation or the subsidiary corporation preferential rights with respect to the acquisition of the employee's (or direct owner's) stock will be considered to be a condition described in the preceding sentence. It is not necessary, in order for a condition to be considered to be in favor of the parent corporation or the subsidiary corporation, that the parent or subsidiary be extended a discriminatory concession with respect to the price of the stock. For example, a condition whereby the parent corporation is given a right of first refusal with respect to any stock of the subsidiary corporation offered by an employee for sale is a condition which substantially restricts or limits the employee's right to dispose of such stock and runs in favor of the parent corporation. Moreover, any legally enforceable condition

which prohibits the employee from disposing of his stock without the consent of the parent (or a subsidiary of the parent) will be considered to be a substantial limitation running in favor of the parent corporation.

(iv) *Controlled exempt organization.* Stock in the subsidiary corporation owned (directly and with the application of the rules contained in paragraph (b) of § 1.1563–3) by an organization (other than the parent corporation):

(a) To which section 501 (relating to certain educational and charitable organizations which are exempt from tax) applies, and

(b) Which is controlled directly or indirectly by the parent corporation or subsidiary corporation, by an individual, estate, or trust that is a principal stockholder of the parent corporation, by an officer of the parent corporation, or by any combination thereof.

The terms ''principal stockholder of the parent corporation'' and ''officer of the parent corporation'' shall have the same meanings in this subdivision as in subdivision (ii) of this subparagraph. The term ''control'' as used in this subdivision means control in fact and the determination of whether the control requirement of *(b)* of this subdivision is met will depend upon all the facts and circumstances of each case, without regard to whether such control is legally enforceable and irrespective of the method by which such control is exercised or exercisable.

(3) *Brother-sister controlled group.* If five or fewer persons (hereinafter referred to as common owners) who are individuals, estates, or trusts own (directly and with the application of the rules contained in paragraph (b) of § 1.1563–3) stock possessing 50 percent or more of the total combined voting power of all classes of stock entitled to vote or 50 percent or more of the total value of shares of all classes of stock in a corporation, the provisions of subparagraph (4) of this paragraph shall apply. In determining whether the stock owned by such person or persons possesses the requisite percentage of the total combined voting power of all classes of stock entitled to vote of a corporation, see paragraph (a)(6) of § 1.1563–1.

(4) *Stock treated as not outstanding.* If the provisions of this subparagraph apply, then for purposes of determining whether a corporation is a member of a brother-sister controlled group of corporations within the meaning of paragraph (a)(3) of § 1.1563–1, the following stock of such corporation shall, except as otherwise provided in paragraph (c) of this section, be treated as if it were not outstanding:

(i) *Exempt employees' trust.* Stock in such corporation held by an employees' trust described in section 401(a) which is exempt from tax under section 501(a), if such trust is for the benefit of the employees of such corporation.

(ii) *Employees.* Stock in such corporation owned (directly and with the application of the rules contained in paragraph (b) of § 1.1563–3) by an employee of such corporation if such stock is subject to conditions which run in favor of a common owner of such corporation (or in favor of such corporation) and which substantially restrict or limit the employee's right (or if the employee constructively owns such stock, the record owner's right) to dispose of such stock. The principles of subparagraph (2)(iii) of this paragraph shall apply in determining whether a condition satisfies the requirements of the preceding sentence. Thus, in general, a condition which extends, directly or indirectly, to a common owner or such corporation preferential rights with respect to the acquisition of the employee's (or record owner's) stock will be considered to be a condition which satisfies such requirements. For purposes of this subdivision, if a condition which restricts or limits an employee's right (or record owner's right) to dispose of his stock also applies to the stock in such corporation held by such common owner pursuant to a bona fide reciprocal stock purchase arrangement, such condition shall not be treated as one which restricts or limits the employee's (or record owner's) right to dispose of such stock. An example of a reciprocal stock purchase arrangement is an agreement whereby a common owner and the employee are given a right of first refusal with respect to stock of the employer

corporation owned by the other party. If, however, the agreement also provides that the common owner has the right to purchase the stock of the employer corporation owned by the employee in the event that the corporation should discharge the employee for reasonable cause, the purchase arrangement would not be reciprocal within the meaning of this subdivision.

(iii) *Controlled exempt organization.* Stock in such corporation owned (directly and with the application of the rules contained in paragraph (b) of § 1.1563–3) by an organization:

(a) To which section 501(c)(3) (relating to certain educational and charitable organizations which are exempt from tax) applies, and

(b) Which is controlled directly or indirectly by such corporation, by an individual, estate, or trust that is a principal stockholder of such corporation, by an officer of such corporation, or by any combination thereof.

The terms ''principal stockholder'' and ''officer'' shall have the same meanings in this subdivision as in subparagraph (2)(ii) of this paragraph. The term ''control'' as used in this subdivision means control in fact and the determination of whether the control requirement of *(b)* of this subdivision is met will depend upon all the facts and circumstances of each case, without regard to whether such control is legally enforceable and irrespective of the method by which such control is exercised or exercisable.

(5) *Other controlled groups.* The provisions of subparagraphs (1), (2), (3), and (4) of this paragraph shall apply in determining whether a corporation is a member of a combined group (within the meaning of paragraph (a)(4) of § 1.1563–1) or an insurance group (within the meaning of paragraph (a)(5) of § 1.1563–1). For example, under paragraph (a)(4) of § 1.1563–1, in order for a corporation to be a member of a combined group such corporation must be a member of a parent-subsidiary group or a brother-sister group. Accordingly, the excluded stock rules provided by this paragraph are applicable in determining whether the corporation is a member of such group.

(6) *Meaning of employee.* For purposes of this section §§ 1.1563–3 and 1.1563–4, the term ''employee'' has the same meaning such term is given in section 3306(i) of the Code (relating to definitions for purposes of the Federal Unemployment Tax Act). Accordingly, the term employee as used in such sections includes an officer of a corporation.

(7) *Examples.* The provisions of this paragraph may be illustrated by the following examples:

Example (1). Corporation P owns 70 of the 100 shares of the only class of stock of corporation S. The remaining shares of S are owned as follows: 4 shares by Jones (the general manager of P), and 26 shares by Smith (who also owns 5 percent of the total combined voting power of the stock of P). P satisfies the 50 percent stock ownership requirement of subparagraph (1) of this paragraph with respect to S. Since Jones is an officer of P and Smith is a principal stockholder of P, under subparagraph (2)(ii) of this paragraph the S stock owned by Jones and Smith is treated as not outstanding for purposes of determining whether P and S are members of a parent-subsidiary controlled group of corporations within the meaning of paragraph (a)(2) of § 1.1563–1. Thus, P is considered to own stock possessing 100 percent (70÷70) of the total voting power and value of all the S stock. Accordingly, P and S are members of a parent-subsidiary controlled group of corporations.

Example (2). Assume the same facts as in example (1) and further assume that Jones owns 15 shares of the 100 shares of the only class of stock of corporation S–1, and corporation S owns 75 shares of such stock. P satisfies the 50 percent stock ownership requirement of subparagraph (1) of this paragraph with respect to S–1 since P is considered as owning 52.5 percent (70 percent× 75 percent) of the S–1 stock with the application of paragraph (b)(4) of § 1.1563–3. Since Jones is an officer of P, under subparagraph (2)(ii) of this paragraph, the S–1 stock owned by Jones is treated as not outstanding for purposes of determining whether S–1 is a member of the parent-subsidiary controlled group of corporations. Thus, S is considered to own stock possessing 88.2 percent (75÷85) of the voting power and value of the S–1 stock. Accordingly, P, S, and S–1 are members of a parent-subsidiary controlled group of corporations.

Example (3). Corporation X owns 60 percent of the only class of stock of corporation Y. Davis, the president of Y, owns the remaining 40 percent of the stock of Y. Davis has agreed that if he offers his stock in Y for sale he will first offer the stock to X at a price equal to the fair market value of the stock on the first date the stock is offered for sale. Since Davis is an employee of Y within the meaning of section 3306(i) of the Code, and

his stock in Y is subject to a condition which substantially restricts or limits his right to dispose of such stock and runs in favor of X, under subparagraph (2)(iii) of this paragraph such stock is treated as if it were not outstanding for purposes of determining whether X and Y are members of a parent-subsidiary controlled group of corporations. Thus, X is considered to own stock possessing 100 percent of the voting power and value of the stock of Y. Accordingly, X and Y are members of a parent-subsidiary controlled group of corporations. The result would be the same if Davis's wife, instead of Davis, owned directly the 40 percent stock interest in Y and such stock was subject to a right of first refusal running in favor of X.

(c) *Exception*—(1) *General*. If stock of a corporation is owned by a person directly or with the application of the rules contained in paragraph (b) of §1.1563–3 and such ownership results in the corporation being a component member of a controlled group of corporations on a December 31, then the stock shall not be treated as excluded stock under the provisions of paragraph (b) of this section if the result of applying such provisions is that such corporation is not a component member of a controlled group of corporations on such December 31.

(2) *Illustration*. The provisions of this paragraph may be illustrated by the following example:

Example. On each day of 1965, corporation P owns directly 50 of the 100 shares of the only class of stock of corporation S. Jones, an officer of P, owns directly 30 shares of S stock and P has an option to acquire such 30 shares from Jones. The remaining shares of S are owned by unrelated persons. If, pursuant to the provisions of paragraph (b)(2)(ii) of this section, the 30 shares of S stock owned directly by Jones is treated as not outstanding, the result is that P would be treated as owning stock possessing only 71 percent (50÷70) of the total voting power and value of S stock, and S would not be a component member of a controlled group of corporations on December 31, 1965. However, since P is considered as owning the 30 shares of S stock with the application of paragraph (b)(1) of this section, and such ownership plus the S stock directly owned by P (50 shares) results in S being a component member of a controlled group of corporations on December 31, 1965, the provisions of this paragraph apply. Therefore, the provisions of paragraph (b)(2)(ii) of this section do not apply with respect to the 30 shares of S stock, and on December 31, 1965, S is a component member of a controlled group of corporations consisting of P and S.

[T.D. 6845, 30 FR 9753, Aug. 5, 1965, as amended by T.D. 7181, 37 FR 8070, Apr. 4, 1972]

§ 1.1563–3 Rules for determining stock ownership.

(a) *In general*. In determining stock ownership for purposes of §§1.1562–5, 1.1563–1, 1.1563–2, and this section, the constructive ownership rules of paragraph (b) of this section apply to the extent such rules are referred to in such sections. The application of such rules shall be subject to the operating rules and special rules contained in paragraphs (c) and (d) of this section.

(b) *Constructive ownership*—(1) *Options*. If a person has an option to acquire any outstanding stock of a corporation, such stock shall be considered as owned by such person. For purposes of this subparagraph, an option to acquire such an option, and each one of a series of such options, shall be considered as an option to acquire such stock. For example, assume Smith owns an option to purchase 100 shares of the outstanding stock of M Corporation. Under this subparagraph, Smith is considered to own such 100 shares. The result would be the same if Smith owned an option to acquire the option (or one of a series of options) to purchase 100 shares of M stock.

(2) *Attribution from partnerships*. (i) Stock owned, directly or indirectly, by or for a partnership shall be considered as owned by any partner having an interest of 5 percent or more in either the capital or profits of the partnership in proportion to his interest in capital or profits, whichever such proportion is the greater.

(ii) The provisions of this subparagraph may be illustrated by the following example:

Example. Green, Jones, and White, unrelated individuals, are partners in the GJW partnership. The partners' interests in the capital and profits of the partnership are as follows:

Partner	Capital	Profits
	Percent	Percent
Green	36	25
Jones	60	71
White	4	4

The GJW partnership owns the entire outstanding stock (100 shares) of X Corporation. Under this subparagraph, Green is considered to own the X stock owned by the partnership in proportion to his interest in capital (36 percent) or profits (25 percent), whichever such proportion is the greater. Therefore, Green is considered to own 36 shares of the X stock. However, since Jones has a greater interest in the profits of the partnership, he is considered to own the X stock in proportion to his interest in such profits. Therefore, Jones is considered to own 71 shares of the X stock. Since White does not have an interest of 5 percent or more in either the capital or profits of the partnership, he is not considered to own any shares of the X stock.

(3) *Attribution from estates or trusts.* (i) Stock owned, directly or indirectly, by or for an estate or trust shall be considered as owned by any beneficiary who has an actuarial interest of 5 percent or more in such stock, to the extent of such actuarial interest. For purposes of this subparagraph, the actuarial interest of each beneficiary shall be determined by assuming the maximum exercise of discretion by the fiduciary in favor of such beneficiary and the maximum use of such stock to satisfy his rights as a beneficiary. A beneficiary of an estate or trust who cannot under any circumstances receive any interest in stock held by the estate or trust, including the proceeds from the disposition thereof, or the income therefrom, does not have an actuarial interest in such stock. Thus, where stock owned by a decedent's estate has been specifically bequeathed to certain beneficiaries and the remainder of the estate is bequeathed to other beneficiaries, the stock is attributable only to the beneficiaries to whom it is specifically bequeathed. Similarly, a remainderman of a trust who cannot under any circumstances receive any interest in the stock of a corporation which is a part of the corpus of the trust (including any accumulated income therefrom or the proceeds from a disposition thereof) does not have an actuarial interest in such stock. However, an income beneficiary of a trust does have an actuarial interest in stock if he has any right to the income from such stock even though under the terms of the trust instrument such stock can never be distributed to him. The factors and methods prescribed in § 20.2031–7 of this chapter (Estate Tax Regulations) for use in ascertaining the value of an interest in property for estate tax purposes shall be used for purposes of this subdivision in determining a beneficiary's actuarial interest in stock owned directly or indirectly by or for a trust.

(ii) For the purposes of this subparagraph, property of a decedent shall be considered as owned by his estate if such property is subject to administration by the executor or administrator for the purposes of paying claims against the estate and expenses of administration notwithstanding that, under local law, legal title to such property vests in the decedent's heirs, legatees or devisees immediately upon death. With respect to an estate, the term ''beneficiary'' includes any person entitled to receive property of the decedent pursuant to a will or pursuant to laws of descent and distribution. A person shall no longer be considered a beneficiary of an estate when all the property to which he is entitled has been received by him, when he no longer has a claim against the estate arising out of having been a beneficiary, and when there is only a remote possibility that it will be necessary for the estate to seek the return of property or to seek payment from him by contribution or otherwise to satisfy claims against the estate or expenses of administration. When pursuant to the preceding sentence, a person ceases to be a beneficiary, stock owned by the estate shall not thereafter be considered owned by him.

(iii) Stock owned, directly or indirectly, by or for any portion of a trust of which a person is considered the owner under Subpart E, Part I, Subchapter J of the Code (relating to grantors and others treated as substantial owners) is considered as owned by such person.

(iv) This subparagraph does not apply to stock owned by any employees' trust described in section 401(a) which is exempt from tax under section 501(a).

(4) *Attribution from corporations.* (i) Stock owned, directly or indirectly, by or for a corporation shall be considered as owned by any person who owns (within the meaning of section 1563(d)) 5 percent or more in value or its stock

in that proportion which the value of the stock which such person so owns bears to the value of all the stock in such corporation.

(ii) The provisions of this subparagraph may be illustrated by the following example:

Example. Brown, an individual, owns 60 shares of the 100 shares of the only class of outstanding stock of corporation P. Smith, an individual, owns 4 shares of the P stock, and corporation X owns 36 shares of the P stock. Corporation P owns, directly and indirectly, 50 shares of the stock of corporation S. Under this subparagraph, Brown is considered to own 30 shares of the S stock ($\frac{60}{100}\times 50$), and X is considered to own 18 shares of the S stock ($\frac{36}{100}\times 50$). Since Smith does not own 5 percent or more in value of the P stock, he is not considered as owning any of the S stock owned by P. If, in this example, Smith's wife had owned directly 1 share of the P stock, Smith (and his wife) would each own 5 shares of the P stock, and therefore Smith (and his wife) would be considered as owning 2.5 shares of the S stock ($\frac{5}{100}\times 50$).

(5) *Spouse*. (i) Except as provided in subdivision (ii) of this subparagraph, an individual shall be considered to own the stock owned, directly or indirectly, by or for his spouse, other than a spouse who is legally separated from the individual under a decree of divorce, whether interlocutory or final, or a decree of separate maintenance.

(ii) An individual shall not be considered to own stock in a corporation owned, directly or indirectly, by or for his spouse on any day of a taxable year of such corporation, provided that each of the following conditions are satisfied with respect to such taxable year:

(a) Such individual does not, at any time during such taxable year, own directly any stock in such corporation.

(b) Such individual is not a member of the board of directors or an employee of such corporation and does not participate in the management of such corporation at any time during such taxable year.

(c) Not more than 50 percent of such corporation's gross income for such taxable year was derived from royalties, rents, dividends, interest, and annuities.

(d) Such stock in such corporation is not, at any time during such taxable year, subject to conditions which substantially restrict or limit the spouse's right to dispose of such stock and which run in favor of the individual or his children who have not attained the age of 21 years. The principles of paragraph (b)(2)(iii) of § 1.1563–2 shall apply in determining whether a condition is a condition described in the preceding sentence.

(iii) For purposes of subdivision (ii) (*c*) of this subparagraph, the gross income of a corporation for a taxable year shall be determined under section 61 and the regulations thereunder. The terms ''royalties'', ''rents'', ''dividends'', ''interest'', and ''annuities'' shall have the same meanings such terms are given for purposes of section 1244(c). See paragraph (e)(1)(ii), (iii), (iv), (v), and (vi) of § 1.1244(c)–1.

(6) *Children, grandchildren, parents, and grandparents*. (i) An individual shall be considered to own the stock owned, directly or indirectly, by or for his children who have not attained the age of 21 years, and, if the individual has not attained the age of 21 years, the stock owned, directly or indirectly, by or for his parents.

(ii) If an individual owns (directly, and with the application of the rules of this paragraph but without regard to this subdivision) stock possessing more than 50 percent of the total combined voting power of all classes of stock entitled to vote or more than 50 percent of the total value of shares of all classes of stock in a corporation, then such individual shall be considered to own the stock in such corporation owned, directly or indirectly, by or for his parents, grandparents, grandchildren, and children who have attained the age of 21 years. In determining whether the stock owned by an individual possesses the requisite percentage of the total combined voting power of all classes of stock entitled to vote of a corporation, see paragraph (a)(6) of § 1.1563–1.

(iii) For purposes of section 1563, and §§ 1.1563–1 through 1.1563–4, a legally adopted child of an individual shall be treated as a child of such individual by blood.

(iv) The provisions of this subparagraph may be illustrated by the following example:

Example (a) Facts. Individual F owns directly 40 shares of the 100 shares of the only class of stock of Z Corporation. His son, M

(20 years of age), owns directly 30 shares of such stock, and his son, A (30 years of age), owns directly 20 shares of such stock. The remaining 10 shares of the Z stock are owned by an unrelated person.

(b) F's ownership. Individual F owns 40 shares of the Z stock directly and is considered to own the 30 shares of Z stock owned directly by M. Since, for purposes of the more-than-50-percent stock ownership test contained in subdivision (ii) of this subparagraph, F is treated as owning 70 shares or 70 percent of the total voting power and value of the Z stock, he is also considered as owning the 20 shares owned by his adult son, A. Accordingly, F is considered as owning a total of 90 shares of the Z stock.

(c) M's ownership. Minor son, M, owns 30 shares of the Z stock directly, and is considered to own the 40 shares of Z stock owned directly by his father, F. However, M is not considered to own the 20 shares of Z stock owned directly by his brother, A, and constructively by F, because stock constructively owned by F by reason of family attribution is not considered as owned by him for purposes of making another member of his family the constructive owner of such stock. See paragraph (c)(2) of this section. Accordingly, M owns and is considered as owning a total of 70 shares of the Z stock.

(d) A's ownership. Adult son, A, owns 20 shares of the Z stock directly. Since, for purposes of the more-than-50-percent stock ownership test contained in subdivision (ii) of this subparagraph, A is treated as owning only the Z stock which he owns directly, he does not satisfy the condition precedent for the attribution of Z stock from his father. Accordingly, A is treated as owning only the 20 shares of Z stock which he owns directly.

(c) *Operating rules and special rules*—(1) *In general.* Except as provided in subparagraph (2) of this paragraph, stock constructively owned by a person by reason of the application of subparagraph (1), (2), (3), (4), (5), or (6) of paragraph (b) of this section shall, for purposes of applying such subparagraphs, be treated as actually owned by such person.

(2) *Members of family.* Stock constructively owned by an individual by reason of the application of subparagraph (5) or (6) of paragraph (b) of this section shall not be treated as owned by him for purposes of again applying such subparagraphs in order to make another the constructive owner of such stock.

(3) *Precedence of option attribution.* For purposes of this section, if stock may be considered as owned by a person under subparagraph (1) of paragraph (b) of this section (relating to option attribution) and under any other subparagraph of such paragraph, such stock shall be considered as owned by such person under subparagraph (1) of such paragraph.

(4) *Examples.* The provisions of this paragraph may be illustrated by the following examples:

Example (1). A, 30 years of age, has a 90 percent interest in the capital and profits of a partnership. The partnership owns all the outstanding stock of corporation X and X owns 60 shares of the 100 outstanding shares of corporation Y. Under subparagraph (1) of this paragraph, the 60 shares of Y constructively owned by the partnership by reason of subparagraph (4) of paragraph (b) of this section is treated as actually owned by the partnership for purposes of applying subparagraph (2) of paragraph (b) of this section. Therefore, A is considered as owning 54 shares of the Y stock (90 percent of 60 shares).

Example (2). Assume the same facts as in example (1). Assume further that B, who is 20 years of age and the brother of A, directly owns 40 shares of Y stock. Although the stock of Y owned by B is considered as owned by C (the father of A and B) under paragraph (b)(6)(i) of this section, under subparagraph (2) of this paragraph such stock may not be treated as owned by C for purposes of applying paragraph (b)(6)(ii) of this section in order to make A the constructive owner of such stock.

Example (3). Assume the same facts assumed for purposes of example (2), and further assume that C has an option to acquire the 40 shares of Y stock owned by his son, B. The rule contained in subparagraph (2) of this paragraph does not prevent the reattribution of such 40 shares to A because, under subparagraph (3) of this paragraph, C is considered as owning the 40 shares by reason of option attribution and not by reason of family attribution. Therefore, since A satisfies the more-than-50-percent stock ownership test contained in paragraph (b)(6)(ii) of this section with respect to Y, the 40 shares of Y stock constructively owned by C are reattributed to A, and A is considered as owning a total of 94 shares of Y stock.

(d) *Special rule of section 1563 (f)(3)(B)*—(1) *In general.* If the same stock of a corporation is owned (within the meaning of section 1563(d)) by two or more persons, then such stock shall be treated as owned by the person whose ownership of such stock results in the corporation being a component

member of a controlled group on a December 31 which has at least one other component member on such date.

(2) *Component member of more than one group.* (i) If, by reason of subparagraph (1) of this paragraph, a corporation would (but for this subparagraph) become a component member of more than one controlled group on a December 31, such corporation shall be treated as a component member of only one such controlled group on such date. The determination as to which group such corporation is treated as a component member of shall be made in accordance with the rules contained in subdivisions (ii), (iii), and (iv) of this subparagraph.

(ii) In any case in which a corporation is a component member of a controlled group of corporations on a December 31 as a result of treating each share of its stock as owned only by the person who owns such share directly, then each such share shall be treated as owned by the person who owns such share directly.

(iii) If the application of subdivision (ii) of this subparagraph does not result in a corporation being treated as a component member of only one controlled group on a December 31, then the stock of such corporation described in subparagraph (1) of this paragraph shall be treated as owned by the one person described in such subparagraph who owns, directly and with the application of the rules contained in paragraph (b) (1), (2), (3), and (4) of this section, the stock possessing the greatest percentage of the total value of shares of all classes of stock of the corporation.

(iv) If the application of subdivision (ii) or (iii) of this subparagraph does not result in a corporation being treated as a component member of only one controlled group of corporations on a December 31, then the determination of that group of which such corporation is to be treated as a component member shall be made by the district director with audit jurisdiction of such corporation's return for the taxable year that includes such December 31 unless such corporation files an election as provided in this subdivision. The election shall be in the form of a statement, signed by a person authorized to act on behalf of such corporation, designating the group in which the corporation has elected to be included. The statement shall provide all the information with respect to stock ownership which is reasonably necessary to satisfy the district director that the corporation would, but for the election, be a component member of more than one controlled group. The statement shall be filed on or before the due date (including extensions of time) for the filing of the income tax return of such corporation for the taxable year. However, in the case of an election with respect to December 31, 1970, the statement shall be considered as timely filed if filed on or before December 15, 1971. Once filed, the election is irrevocable and effective until subdivision (ii) or (iii) of this subparagraph applies or until there is a substantial change in the stock ownership of such corporation.

(3) *Examples.* The provisions of this paragraph may be illustrated by the following examples, in which each corporation referred to uses the calendar year as its taxable year and the stated facts are assumed to exist on each day of 1970 (unless otherwise provided in the example):

Example (1). Jones owns all the stock of corporation X and has an option to purchase from Smith all the outstanding stock of corporation Y. Smith owns all the outstanding stock of corporation Z. Since the Y stock is considered as owned by two or more persons, under subparagraph (2)(ii) of this paragraph the Y stock is treated as owned only by Smith since he has direct ownership of such stock. Therefore, on December 31, 1970, Y and Z are component members of the same brother-sister controlled group. If, however, Smith had owned his stock in corporation Z for less than one-half of the number of days of Z's 1970 taxable year, then under subparagraph (1) of this paragraph the Y stock would be treated as owned only by Jones since his ownership results in Y being a component member of a controlled group on December 31, 1970.

Example (2). Individual H owns directly all the outstanding stock of corporation M. W (the wife of H) owns directly all the outstanding stock of corporation N. Neither spouse is considered as owning the stock directly owned by the other because each of the conditions prescribed in paragraph (b) (5)(ii) of this section is satisfied with respect to each corporation's 1970 taxable year. H owns directly 60 percent of the only class of

stock of corporation P and W owns the remaining 40 percent of the P stock. Under subparagraph (2)(iii) of this paragraph, the stock of P is treated as owned only by H since H owns (directly and with the application of the rules contained in paragraph (b)(1), (2), (3), and (4) of this section) the stock possessing the greatest percentage of the total value of shares of all classes of stock of P. Accordingly, on December 31, 1970, P is treated as a component member of a brother-sister group consisting of M and P.

Example (3). Unrelated individuals A and B each own 49 percent of all the outstanding stock of corporation R, which in turn owns 70 percent of the only class of outstanding stock of corporation S. The remaining 30 percent of the stock of corporation S is owned by unrelated individual C. C also owns the remaining 2 percent of the stock of corporation R. Under the attribution rule of paragraph (b)(4) of this section A and B are each considered to own 34.3 percent of the stock of corporation S. Accordingly, since five or fewer persons own at least 80 percent of the stock of corporations R and S and also own more than 50 percent identically (A's and B's identical ownership each is 34.3 percent, C's identical ownership is 2 percent), on December 31, 1970, corporations R and S are treated as component members of the same brother-sister controlled group.

[T.D. 6845, 30 FR 9755, Aug. 5, 1965, as amended by T.D. 7181, 37 FR 8070, Apr. 25, 1972; T.D. 7779, 46 FR 29474, June 2, 1981; T.D. 8179, 53 FR 6613, Mar. 2, 1988]

§ 1.1563–4 Franchised corporations.

(a) *In general.* For purposes of paragraph (b)(2)(ii)*(d)* of § 1.1563–1, a member of a controlled group of corporations shall be considered to be a franchised corporation for a taxable year if each of the following conditions is satisfied for one-half (or more) of the number of days preceding the December 31 included within such taxable year (or, if such taxable year does not include a December 31, for one-half or more of the number of days in such taxable year preceding the last day of such year):

(1) Such member is franchised to sell the products of another member, or the common owner, of such controlled group.

(2) More than 50 percent (determined on the basis of cost) of all the goods held by such member primarily for sale to its customers are acquired from members or the common owner of the controlled group, or both.

(3) The stock of such member is to be sold to an employee (or employees) of such member pursuant to a bona fide plan designed to eliminate the stock ownership of the parent corporation (as defined in paragraph (b)(1) of § 1.1563–2) or of the common owner (as defined in paragraph (b)(3) of § 1.1563–2) in such member.

(4) Such employee owns (or such employees in the aggregate own) directly more than 20 percent of the total value of shares of all classes of stock of such member. For purposes of this subparagraph, the determination of whether an employee (or employees) owns the requisite percentage of the total value of the stock of the member shall be made without regard to paragraph (b) of § 1.1563–2, relating to certain stock treated as excluded stock. Furthermore, if the corporation has more than one class of stock outstanding, the relative voting rights as between each such class of stock shall be disregarded in making such determination.

(b) *Plan for elimination of stock ownership.* (1) A plan referred to in paragraph (a)(3) of this section must:

(i) Provide a reasonable selling price for the stock of the member, and

(ii) Require that a portion of the employee's compensation or dividends, or both, from such member be applied to the purchase of such stock (or to the purchase of notes, bonds, debentures, or similar evidences of indebtedness of such member held by the parent corporation or the common owner).

It is not necessary, in order to satisfy the requirements of subdivision (ii) of this subparagraph, that the plan require that a percentage of every dollar of the compensation and dividends be applied to the purchase of the stock (or the indebtedness). The requirements of such subdivision are satisfied if an otherwise qualified plan provides that under certain specified conditions (such as a requirement that the member earn a specified profit) no portion of the compensation and/or dividends need be applied to the purchase of the stock (or indebtedness), provided such conditions are reasonable.

(2) A plan for the elimination of the stock ownership of the parent corporation or of the common owner will satisfy the requirements of paragraph

(a)(3) of this section and subparagraph (1) of this paragraph even though it does not require that the stock of the member be sold to an employee (or employees) if it provides for the redemption of the stock of the member held by the parent or common owner and under the plan the amount of such stock to be redeemed during any period is calculated by reference to the profits of such member during such period.

[T.D. 6845, 30 FR 9757, Aug. 5, 1965]

§ 1.1564–1 Limitations on additional benefits for members of controlled groups.

(a) *In general.* Section 1564(a)(1) provides that, with respect to any December 31 after 1969 and before 1975, only one component member of a controlled group of corporations (as defined in section 1563(a)) shall be allowed the full amount of:

(1) The $25,000 surtax exemption under section 1562 (relating to election of multiple surtax exemptions),

(2) The $100,000 amount under section 535(c) (2) and (3) (relating to the accumulated earnings credit), and

(3) The $25,000 limitation on the small business deduction of life insurance companies under sections 804(a)(4) and 809(d)(10).

The amounts otherwise allowed to the other component members of such controlled group for their taxable years which include such December 31 shall be reduced to the amounts set forth in the following schedule:

Taxable years including—	Surtax exemption	Amount under sec. 535(c) (2) and (3)	Small business deduction limitation
Dec. 31, 1970	$20,833	$83,333	$20,833
Dec. 31, 1971	16,667	66,667	16,667
Dec. 31, 1972	12,500	50,000	12,500
Dec. 31, 1973	8,333	33,333	8,333
Dec. 31, 1974	4,167	16,667	4,167

(b) *Election.* (1) Section 1564(a)(2) provides that, with respect to any December 31 after 1969 and before 1975, the component members of a controlled group of corporations shall elect which component member or members of such group shall be allowed for their taxable years which includes such December 31 the full amounts described in paragraph (a) (1), (2), and (3) of this section. In making such election, the members may allocate such full amounts among themselves in any manner they choose. For example, the group may select one of its members to receive the full amount of the $25,000 surtax exemption under section 1562 and another of its members to receive the full $100,000 amount under section 535(c)(2), or it may select one of its members to claim both, such full amounts.

(2) The election shall be made with respect to a particular December 31 and shall be valid only if each corporation which is a component member of the controlled group on such December 31 gives its consent. The consents shall be made by means of a statement, signed by persons duly authorized to act on behalf of each of the component members (other than wholly owned subsidiaries), stating which member has been selected to receive the amount which is not reduced under paragraph (a) of this section. The member so selected shall attach the statement to its income tax return for the taxable year including such December 31. The statement shall set forth the name, address, employer identification number, and taxable years of each of the other component members (including wholly owned subsidiaries) of the controlled group. Such other members shall attach a copy of the statement to their income tax returns for their taxable years including such December 31. An election plan adopted by a controlled group with respect to a particular December 31 shall be valid only for the taxable year of each member of the group which includes such December 31.

(3) Each component member of a controlled group which is a wholly owned subsidiary of such group with respect to a December 31 shall be deemed to consent to an election with respect to such December 31, provided each component member of the group which is not a wholly owned subsidiary consents to the election plan. A component member of a controlled group shall be considered to be a wholly owned subsidiary of the group with respect to a December 31 if, on each day preceding such date during its taxable year which includes such date, all of its stock is

owned directly by one or more corporations which are component members of the group on such December 31.

[T.D. 7181, 37 FR 8071, Apr. 25, 1972]

Procedure and Administration

INFORMATION AND RETURNS

RETURNS AND RECORDS

SOURCE: Sections 1.6001–1 to 1.6091–4 contained in T.D. 6500, 25 FR 12108, Nov. 26, 1960, unless otherwise noted.

RECORDS, STATEMENTS, AND SPECIAL RETURNS

§ 1.6001–1 Records.

(a) *In general.* Except as provided in paragraph (b) of this section, any person subject to tax under subtitle A of the Code (including a qualified State individual income tax which is treated pursuant to section 6361(a) as if it were imposed by chapter 1 of subtitle A), or any person required to file a return of information with respect to income, shall keep such permanent books of account or records, including inventories, as are sufficient to establish the amount of gross income, deductions, credits, or other matters required to be shown by such person in any return of such tax or information.

(b) *Farmers and wage-earners.* Individuals deriving gross income from the business of farming, and individuals whose gross income includes salaries, wages, or similar compensation for personal services rendered, are required with respect to such income to keep such records as will enable the district director to determine the correct amount of income subject to the tax. It is not necessary, however, that with respect to such income individuals keep the books of account or records required by paragraph (a) of this section. For rules with respect to the records to be kept in substantiation of traveling and other business expenses of employees, see § 1.162–17.

(c) *Exempt organizations.* In addition to such permanent books and records as are required by paragraph (a) of this section with respect to the tax imposed by section 511 on unrelated business income of certain exempt organizations, every organization exempt from tax under section 501(a) shall keep such permanent books of account or records, including inventories, as are sufficient to show specifically the items of gross income, receipts and disbursements. Such organizations shall also keep such books and records as are required to substantiate the information required by section 6033. See section 6033 and §§ 1.6033–1 through 1.6033–3.

(d) *Notice by district director requiring returns statements, or the keeping of records.* The district director may require any person, by notice served upon him, to make such returns, render such statements, or keep such specific records as will enable the district director to determine whether or not such person is liable for tax under subtitle A of the Code, including qualified State individual income taxes, which are treated pursuant to section 6361(a) as if they were imposed by chapter 1 of subtitle A.

(e) *Retention of records.* The books or records required by this section shall be kept at all times available for inspection by authorized internal revenue officers or employees, and shall be retained so long as the contents thereof may become material in the administration of any internal revenue law.

[T.D. 6500, 25 FR 12108, Nov. 26, 1960, as amended by T.D. 7122, 36 FR 11025, June 8, 1971; T.D. 7577, 43 FR 59357, Dec. 20, 1978; T.D. 8308, 55 FR 35593, Aug. 31, 1990]

§ 1.6001–2 Returns.

For rules relating to returns required to be made by every individual, estate, or trust which is liable for one or more qualified State individual income taxes, as defined in section 6362, for a taxable year, see paragraph (b) of § 301.6361–1 of this chapter (Regulations on procedure and Administration).

[T.D. 7577, 43 FR 59357, Dec. 20, 1978]

TAX RETURNS OR STATEMENTS

§ 1.6011–1 General requirement of return, statement, or list.

(a) *General rule.* Every person subject to any tax, or required to collect any tax, under Subtitle A of the Code, shall make such returns or statements as are required by the regulations in this chapter. The return or statement shall

include therein the information required by the applicable regulations or forms.

(b) *Use of prescribed forms.* Copies of the prescribed return forms will so far as possible be furnished taxpayers by district directors. A taxpayer will not be excused from making a return, however, by the fact that no return form has been furnished to him. Taxpayers not supplied with the proper forms should make application therefor to the district director in ample time to have their returns prepared, verified, and filed on or before the due date with the internal revenue office where such returns are required to be filed. Each taxpayer should carefully prepare his return and set forth fully and clearly the information required to be included therein. Returns which have not been so prepared will not be accepted as meeting the requirements of the Code. In the absence of a prescribed form, a statement made by a taxpayer disclosing his gross income and the deductions therefrom may be accepted as a tentative return, and, if filed within the prescribed time, the statement so made will relieve the taxpayer from liability for the addition to tax imposed for the delinquent filing of the return, provided that without unnecessary delay such a tentative return is supplemented by a return made on the proper form.

(c) *Tax withheld on nonresident aliens and foreign corporations.* For requirements respecting the return of the tax required to be withheld under chapter 3 of the Code on nonresident aliens and foreign corporations and tax-free covenant bonds, see § 1.1461–2.

[T.D. 6500, 25 FR 12108, Nov. 26, 1960, as amended by T.D. 6922, 32 FR 8713, June 17, 1967]

§ 1.6011–2 Returns, etc., of DISC's and former DISC's.

(a) *Records and information.* Every DISC and former DISC (as defined in section 992(a)) must comply with section 6001 and the regulations thereunder, relating to required records, statements, and special returns. Thus, for example, a DISC is required to maintain the books of account or records described in § 1.6001–1(a). In addition, every DISC must furnish to each of its shareholders on or before the last day of the second month following the close of the taxable year of the DISC a copy of Schedule K (Form 1120–DISC) disclosing the amounts of actual distributions and deemed distributions from the DISC to such shareholder for the taxable year of the DISC. In the case of a deficiency distribution to meet qualification requirements, see § 1.992–3(a)(4) for requirements that distribution be designated in the form of a communication sent to a shareholder and service center at the time of distribution.

(b) *Returns*—(1) *Requirement of return.* Every DISC (as defined in section 992(a)(1)) shall make a return of income. A former DISC (as defined in section 992(a)(3)) shall also make a return of income in addition to any other return required. The return required of a DISC or former DISC under this section shall be made on Form 1120–DISC. The provisions of § 1.6011–1 shall apply with respect to a DISC and former DISC. A former DISC should indicate clearly on Form 1120–DISC that it is making a return of income as a former DISC (for example, by labeling at the top of the Form 1120–DISC ''Former DISC''). In the case of a former DISC, those items on the form which pertain to the computation of taxable income shall not be completed, but Schedules J, K, L, and M must be completed. Except as otherwise specifically provided in the Code or regulations, the return of a DISC or former DISC is considered to be an income tax return.

(2) *Existence of DISC.* A corporation which is a DISC and which is in existence during any portion of a taxable year is required to make a return for that fractional part of its taxable year during which it was in existence.

[T.D. 7533, 43 FR 6603, Feb. 15, 1978]

§ 1.6011–3 Requirement of statement from payees of certain gambling winnings.

(a) *General rule.* Except as provided in paragraph (c) of this section, any person receiving a payment with respect to a wager in a sweepstakes, wagering pool, lottery, or other wagering transaction (including a parimutuel pool with respect to horse races, dog races, or jai alai) shall make a statement to

the payer of such winnings upon the payer's demand. Such statements shall accompany the payer's return made with respect to the payment as required pursuant to section 3402(q) or 6041, as the case may be.

(b) *Contents of statement.* The statement referred to in paragraph (a) shall contain information (in addition to that required under section 6041(c)) as to the amount, if any, of winnings from identical wagers to which the recipient is entitled. If any person other than the recipient is entitled to all or a portion of the payment, the statement shall also include information as to the amount, if any, of winnings from identical wagers to which each such person is entitled. The statement shall be provided on Form W–2G or, if persons other than the recipient are entitled to all or a portion of such payment, on Form 5754.

(c) *Exception.* The requirement of paragraph (a) of this section does not apply with respect to any payment of winnings—

(1) From a slot machine play, or a bingo or keno game,

(2) Which is subject to withholding under section 3402(q) without regard to the existence of winnings from identical wagers, or

(3) For which no return of information under section 6041 is required of the payer.

(d) *Meaning of terms,* For purposes of this section, the terms ''sweepstakes'', ''wagering pool'', ''lottery'', ''other wagering transaction'' and ''identical wagers'' shall have the same meanings as ascribed to them under § 31.3402(q)–1.

[T.D. 7919, 48 FR 46297, Oct. 12, 1983]

§ 1.6011–4T Requirement of statement disclosing participation in certain transactions by corporate taxpayers (Temporary).

(a) *In general.* Every taxpayer that is required to file a return for a taxable year with respect to a tax imposed under section 11, 594, 801, or 831 and that has participated, directly or indirectly, in a reportable transaction within the meaning of paragraph (b) of this section must attach to its return for the taxable year described in paragraph (d) of this section a disclosure statement in the form prescribed by paragraph (c) of this section. For this purpose, a taxpayer will have indirectly participated in a transaction if its Federal income tax liability is affected by the transaction even if it is not a direct party to the transaction (*e.g.*, it participates through a partnership or through a controlled entity). A separate disclosure statement is required for each reportable transaction. The fact that a taxpayer files a disclosure statement for a reportable transaction shall not affect the legal determination whether the tax benefits claimed with respect to the transaction are allowable.

(b) *Definition of reportable transaction*—(1) *In general.* A reportable transaction is a transaction that is described in either paragraph (b)(2) or (3) of this section and that meets the projected tax effect test in paragraph (b)(4) of this section. The term *transaction* includes all of the factual elements necessary to support the tax benefits that are expected to be claimed with respect to any entity, plan, or arrangement, and includes any series of related steps carried out as part of a prearranged plan and any series of substantially similar transactions entered into in the same taxable year.

(2) *Listed transactions.* A transaction is described in this paragraph (b)(2) if the transaction is the same as or substantially similar to one of the types of transactions that the Internal Revenue Service (IRS) has determined to be a tax avoidance transaction and identified by notice, regulation, or other form of published guidance as a listed transaction for purposes of section 6011. However, a listed transaction is not treated as a reportable transaction if it has affected the taxpayer's Federal income tax liability as reported on any tax return filed on or before February 28, 2000. The fact that a transaction becomes a listed transaction does not imply that the transaction was not otherwise a reportable transaction prior thereto.

(3) *Other reportable transactions*—(i) *In general.* Except as provided in paragraph (b)(3)(ii) of this section, a transaction is described in this paragraph

(b)(3) if it is entered into after February 28, 2000 and has at least two of the following characteristics:

(A) The taxpayer has participated in the transaction under conditions of confidentiality (as defined in § 301.6111–2T(c)).

(B) The taxpayer has obtained or been provided with contractual protection against the possibility that part or all of the intended tax benefits from the transaction will not be sustained, including, but not limited to, recission rights, the right to a full or partial refund of fees paid to any person, fees that are contingent on the taxpayer's realization of tax benefits from the transaction, insurance protection with respect to the tax treatment of the transaction, or a tax indemnity or similar agreement (other than a customary indemnity provided by a principal to the transaction that did not participate in the promotion of the transaction to the taxpayer).

(C) The taxpayer's participation in the transaction was promoted, solicited, or recommended by one or more persons who have received or are expected to receive fees or other consideration with an aggregate value in excess of $100,000, and such person or persons' entitlement to such fees or other consideration was contingent on the taxpayer's participation in the transaction.

(D) The expected treatment of the transaction for Federal income tax purposes in any taxable year differs or is expected to differ by more than $5 million from the treatment of the transaction for purposes of determining book income as taken into account on the schedule M–1 (or comparable schedule) on the taxpayer's Federal corporate income tax return for the same period.

(E) The transaction involves the participation of a person that the taxpayer knows or has reason to know is in a Federal income tax position that differs from that of the taxpayer (such as a tax exempt entity or a foreign person), and the taxpayer knows or has reason to know that such difference in tax position has permitted the transaction to be structured on terms that are intended to provide the taxpayer with more favorable Federal income tax treatment than it could have obtained without the participation of such person (or another person in a similar tax position).

(F) The expected characterization of any significant aspect of the transaction for Federal income tax purposes differs from the expected characterization of such aspect of the transaction for purposes of taxation of any party to the transaction in another country.

(ii) *Exceptions.* A transaction is not a reportable transaction under paragraph (b)(3) of this section if paragraph (b)(3)(ii)(A), (B), (C), or (D) of this section is satisfied.

(A) The taxpayer has participated in the transaction in the ordinary course of its business in a form consistent with customary commercial practice, and the taxpayer reasonably determines that it would have participated in the same transaction on substantially the same terms irrespective of the expected Federal income tax benefits.

(B) The taxpayer has participated in the transaction in the ordinary course of its business in a form consistent with customary commercial practice, and the taxpayer reasonably determines that there is a long-standing and generally accepted understanding that the expected Federal income tax benefits from the transaction (taking into account any combination of intended tax consequences) are allowable under the Internal Revenue Code (Code) for substantially similar transactions.

(C) The taxpayer reasonably determines that there is no reasonable basis under Federal tax law for denial of any significant portion of the expected Federal income tax benefits from the transaction. Such a determination must take into account the entirety of the transaction and any combination of tax consequences that are expected to result from any component steps of the transaction, must not be based on any unreasonable or unrealistic factual assumptions, and must take into account all relevant aspects of Federal tax law, including the statute and legislative history, treaties, authoritative administrative guidance, and judicial decisions that establish principles of general application in the tax law (*e.g.*, *Gregory* v. *Helvering*, 293 U.S. 465 (1935)).

(D) The transaction is identified in published guidance as being excepted from disclosure under this section.

(iii) *Ordinary course of business.* For purposes of paragraphs (b)(3)(ii)(A) and (B) of this section, a transaction involving the acquisition, disposition, or restructuring of a business, including the acquisition, disposition, or other change in the ownership or control of an entity that is engaged in a business, or a transaction involving a recapitalization or an acquisition of capital for use in the taxpayer's business, shall be considered a transaction carried out in the ordinary course of a taxpayer's business.

(4) *Projected tax effect*—(i) *In general.* A transaction described in paragraph (b)(2) of this section meets the projected tax effect test if, at the time the taxpayer enters into the transaction or at any time thereafter, the taxpayer reasonably estimates that the transaction will reduce the taxpayer's Federal income tax liability by more than $1 million in any single taxable year or by a total of more than $2 million for any combination of taxable years in which the transaction is expected to have the effect of reducing the taxpayer's Federal income tax liability. A transaction described in paragraph (b)(3) of this section meets the projected tax effect test if, at the time the taxpayer enters into the transaction or at any time thereafter, the taxpayer reasonably estimates that the transaction will reduce the taxpayer's Federal income tax liability by more than $5 million in any single taxable year or by a total of more than $10 million for any combination of taxable years in which the transaction is expected to have the effect of reducing the taxpayer's Federal income tax liability. For purposes of this paragraph (b)(4), a transaction will be treated as reducing a taxpayer's Federal income tax liability for a taxable year if, and to the extent that, disallowance of the tax treatment claimed or expected to be claimed would result in an increase in the taxpayer's Federal income tax liability for that year. These dollar thresholds may be adjusted pursuant to forms prescribed for reporting under this section and the instructions to such forms.

(ii) *Estimation of projected tax effect.* A taxpayer's estimate of the effect of a transaction on its Federal income tax liability shall take into account all projected Federal income tax consequences of the transaction, including all deductions, exclusions from gross income, nonrecognition of gain, tax credits, adjustments (or the absence of adjustments) to the basis of property, and any other tax consequences that may reduce the taxpayer's Federal income tax liability by affecting the timing, character, or source of any item of income, gain, deduction, loss, or credit. The estimate shall not take into account the potential Federal income tax effect of any other transaction or transactions that the taxpayer might have entered into if the taxpayer had not entered into the transaction in question. Gross income may not be taken into account if the elements of the transaction that result in the creation of the gross income are not necessary to achieve the intended tax results of the transaction, whether or not these elements are an integral part of the transaction. For example, gross income may not be taken into account to the extent that it would have been reasonably possible for the taxpayer to have participated in the transaction in a manner that would have been expected to produce less gross income without a commensurate effect on the other tax consequences of the transaction. In addition, gain on property that the taxpayer acquired independent of its participation in the transaction may not be taken into account.

(5) *Examples.* The following examples illustrate the application of paragraph (b) of this section. Assume, for purposes of these examples, that the transactions are not the same as or substantially similar to any of the types of transactions that the IRS has identified as listed transactions under section 6011 and, thus, are not described in paragraph (b)(2) of this section. The examples are as follows:

Example 1. In March of 2000, C, a domestic corporation, invests $100 million to purchase certain financial instruments the terms of which have been structured to enable the holder to claim a deductible tax loss upon the disposition of one or more of the instruments a short time after acquisition while deferring gain on the retained instruments.

C purchased the instruments on the recommendation of X, which is expected to receive direct or indirect compensation in excess of $100,000 contingent on C's purchase. C disposes of certain of the financial instruments in November of 2000, and reports a loss from the disposition of those financial instruments on its 2000 Federal corporate income tax return which reduces its reported Federal income tax liability by more than $5 million. That loss is not reflected on C's income statement for purposes of determining book income as taken into account on the schedule M–1 on C's Federal corporate income tax return. Further, C is unable to reasonably determine that it would have entered into the transaction irrespective of the Federal income tax benefits, or that the transaction is a customary form of transaction giving rise to tax consequences for which there is a long-standing and generally accepted understanding that such tax consequences are allowable under the Code for similar transactions, or that the Commissioner would have no reasonable basis to deny the claimed loss. The transaction involving C's purchase and disposition of the financial instruments has the characteristics described in paragraphs (b)(3)(i)(C) and (D) of this section. None of the exceptions in paragraph (b)(3)(ii) of this section applies. Therefore, the transaction involving C's purchase and disposition of the financial instruments is a reportable transaction because it is described in paragraph (b)(3) of this section.

Example 2. In the year 2001, D, a domestic corporation, completes construction of an office building to be used in its business. After completion of the building but before D files its tax return for the year 2001, it is approached by Y, a professional services organization, which advises D that Y has developed a set of programs that will enable D to maximize its depreciation deductions with respect to the building and the related furniture and fixtures. Y allows D to review Y's programs subject to D's agreement that it will not use any portion of the programs in establishing its depreciation accounts for Federal tax purposes unless it pays Y a fee of $150,000. In addition, D makes a commitment to Y that it will not divulge any information relating to the programs to any person, whether or not D decides to use the programs. D agrees to use Y's programs for purposes of computing its depreciation allowances for 2001 and later taxable years. D expects its use of the programs to reduce its Federal income tax liability by more than $10 million over the life of the building. However, D reasonably determines that it would have constructed and owned the office building in the same manner irrespective of the enhanced depreciation that it expects to derive from the use of Y's programs. Therefore, regardless of whether D's depreciation deductions on the building may be subject to disallowance, the transaction encompassing the construction of the building and the use of Y's programs is not a reportable transaction by reason of the exception under paragraph (b)(3)(ii)(A) of this section.

Example 3. E is a domestic corporation, which is a calendar year taxpayer. E is engaged in the leasing business. In 2001, E enters into a large number of substantially similar arrangements described in paragraph (b)(3)(i) of this section under which it acquires and leases tangible personal property to U.S. persons who use such property in their businesses. E treats the leases as leases for Federal income tax purposes and as loans for financial accounting purposes. During the first three taxable years in which the leases are in effect, E reasonably expects that its reported taxable income will be more than $30 million lower than it would be if the leases were treated as loans for Federal income tax purposes, giving rise to a total expected reduction of E's Federal income tax liability for those years in excess of $10 million. E cannot conclude that it would have entered into the leases on substantially the same terms irrespective of the expected Federal income tax benefits, nor can it conclude that the Commissioner would have no reasonable basis to deny its tax treatment of the leases. However, E does reasonably determine that the terms of the leases are consistent with customary commercial form in the leasing industry, and that there is a long-standing and generally accepted understanding that the combination of Federal income tax consequences it is claiming with respect to the leases are allowable under the Code for similar transactions. The substantially similar leases would be treated for purposes of this section as a single transaction that would satisfy the projected tax effect test described in paragraph (b)(4) of this section. However, the leases would not be a reportable transaction by reason of the exception under paragraph (b)(3)(ii)(B) of this section.

(c) *Form and content of disclosure statement.* (1) The disclosure statement for each reportable transaction must include the information required by paragraph (c)(1)(i) through (c)(1)(vi) of this section and shall be presented in a format (preferably no longer than one page) similar to that shown in the *Example* in paragraph (c)(2) of this section or on such form as may be prescribed for use under this section.

(i) The name, if any, by which the transaction is known or commonly referred to by the taxpayer; if no name exists, provide a short-hand designation of this transaction to distinguish it from other reportable transactions

in which the taxpayer may have participated (or may participate in the future).

(ii) A statement indicating whether, to the best knowledge of the taxpayer, the transaction has been registered as a tax shelter under section 6111. If the transaction has been registered as a tax shelter under section 6111, indicate whether Form 8271, ''Investor Reporting of Tax Shelter Registration Number'', has been filed with the taxpayer's return and provide the registration number, if any, that has been assigned to the tax shelter.

(iii) A brief description of the principal elements of the transaction that give rise to the expected tax benefits.

(iv) A brief description of the expected tax benefits of the transaction (*e.g.*, loss deductions, interest deductions, rental deductions, foreign tax credits, etc.).

(v) An identification of each taxable year (including prior taxable years) for which the transaction is expected to have the effect of reducing the taxpayer's Federal income tax liability and an estimate (which may be rounded to the nearest $1 million) of the amount by which the transaction is expected to reduce the taxpayer's Federal income tax liability for each such taxable year.

(vi) The names and addresses of any parties who promoted, solicited, or recommended the taxpayer's participation in the transaction and who had a financial interest, including the receipt of fees, in the taxpayer's decision to participate.

(2) *Example.* The following example illustrates the application of paragraph (c) of this section: In January of 1999, X, a domestic corporation which is a calendar year taxpayer, entered into an arrangement under which it purported to lease a building owned and occupied by the government of a municipality located in foreign country W and lease the building back to the municipal government. X determines that the transaction is a reportable transaction described in paragraph (b)(1) of this section because it is described in paragraph (b)(2) of this section and satisfies the projected tax effect test in paragraph (b)(4) of this section. As of February 28, 2000, X had not filed its 1999 Federal corporate income tax return. The following form of disclosure statement would satisfy the requirements described in paragraph (c)(1) of this section.

DISCLOSURE STATEMENT FOR REPORTABLE TRANSACTION

Corporation X (EIN)
(address)

1. IDENTIFICATION OF TRANSACTION: LILO—Country W.

2. REGISTRATION STATUS UNDER SECTION 6111: Not registered.

3. DESCRIPTION OF TRANSACTION: We leased a building from a municipality in W. We made an advance payment of rent of $89 million. The lease term is 34 years. The foreign municipality subleased the asset back from us for a term of 20 years. The foreign municipality has the option, at the end of the sublease term, to buy out our interest for $50 million. Our advance lease payment has been financed with a bank loan of $60 million. The foreign municipality placed $75 million of the advance rental payment in special accounts to satisfy the sublease and buyout obligations.

4. PRINCIPAL TAX BENEFITS: Deductions for rental and interest payments in excess of income from leaseback rental payments.

DISCLOSURE STATEMENT FOR REPORTABLE TRANSACTION—Continued

5. ESTIMATES OF EXPECTED REDUCTION OF FEDERAL INCOME TAX LIABILITY FOR AFFECTED TAXABLE YEARS: 1999–2002, $5 million per year; 2003–2013, $4 million per year; and 2014–2017, $3 million per year.

6. PROMOTERS:

Financial Institution Y
(address)
(telephone number)

Professional Service Firm Z
(address)
(telephone number)

(d) *Time of providing disclosure*—(1) *In general*. The disclosure statement for a reportable transaction shall be attached to the taxpayer's Federal corporate income tax return for each taxable year for which the taxpayer's Federal income tax liability is affected by its participation in the transaction. In addition, at the same time that the disclosure statement is first attached to the taxpayer's Federal income tax return, a copy of that disclosure statement must be sent to: Internal Revenue Service LM:PFTG:OTSA, Large & Mid-Size Business Division, 1111 Constitution Ave., N.W., Washington, DC 20224. If a transaction becomes a reportable transaction on or after the date the taxpayer has filed its return for the first taxable year for which the transaction affected the taxpayer's Federal income tax liability (*e.g.*, there is a change in facts affecting the expected Federal income tax effect of the transaction, or the transaction subsequently becomes one identified in published guidance as a listed transaction described in (b)(2) of this section), the disclosure statement shall be filed as an attachment to the taxpayer's Federal corporate income tax return next filed after the date the transaction becomes a reportable transaction. If a disclosure statement is required as an attachment to a Federal corporate income tax return that is filed earlier than 180 days after February 28, 2000, the taxpayer may either attach the disclosure statement to the return, or file the disclosure statement as an amendment to the return no later than 180 days after February 28, 2000.

(2) *Example*. The following example illustrates the application of this paragraph (d): In December of 2000, F, a domestic corporation which is a calendar year taxpayer, enters into a transaction described in paragraph (b)(3) of this section but not described in paragraph (b)(2) of this section. At the time F enters into the transaction and thereafter, F reasonably estimates that the transaction will reduce F's Federal income tax liability by $2 million in any single taxable year and by a total of $8 million for any combination of taxable years in which the transaction is expected to have the effect of reducing F's Federal income tax liability. Consequently, the transaction does not meet the projected tax effect test described in paragraph (b)(4) of this section for transactions described in paragraph (b)(3) of this section. On March 1, 2002, the IRS publishes a notice identifying the transaction as a listed transaction described in paragraph (b)(2) of this section. Thus, upon issuance of the notice, the transaction becomes a transaction described in paragraph (b)(2) of this section. As a result of the lower dollar thresholds of the projected tax effect test with respect to transactions described in (b)(2) of this section, the transaction meets the projected tax effect test in paragraph (b)(4) of this section. Consequently, the transaction becomes a reportable transaction described in paragraph (b)(1) of this section, and F is required to file a disclosure statement meeting the requirements of paragraph (c)(1) of this section for the transaction as an attachment to F's next filed Federal corporate income tax return. If F's 2001 return has not been filed on or before the date the Service identifies the transaction as a listed transaction, the disclosure statement must be attached to F's 2001 return.

(e) *Retention of documents*. The taxpayer must retain a copy of all documents and other records related to a transaction subject to disclosure under

this section that are material to an understanding of the facts of the transaction, the expected tax treatment of the transaction, or the corporation's decision to participate in the transaction. Such documents must be retained until the expiration of the statute of limitations applicable to the first taxable year for which disclosure of the transaction was made in accordance with the requirements of this section. (This document retention requirement is in addition to any document retention requirements that section 6001 generally imposes on the taxpayer.) Such documents generally include, but are not limited to, the following: marketing materials related to the transaction; written analyses used in decision-making related to the transaction; correspondence and agreements between the taxpayer and any promoter, advisor, lender, or other party to the reportable transaction that relate to the transaction; documents discussing, referring to, or demonstrating the tax benefits arising from the reportable transaction; and documents, if any, referring to the business purposes for the reportable transaction.

(f) *Affiliated groups.* For purposes of this section, an affiliated group of corporations that joins in the filing of a consolidated return under section 1501 shall be considered a single taxpayer.

(g) *Effective date.* This section applies to Federal corporate income tax returns filed after February 28, 2000. However, paragraphs (a) and (e) of this section apply to Federal corporate income tax returns filed after August 11, 2000 and to documents and other records that the taxpayer acquires, prepares, or has in its possession on or after August 11, 2000. Taxpayers may rely on the rules in paragraphs (a) and (e) of this section for Federal corporate income tax returns filed after February 28, 2000, and for documents and other records that the taxpayer acquires, prepares, or has in its possession on or after February 28, 2000. Otherwise, the rules that apply with respect to Federal corporate income tax returns filed after February 28, 2000, and records that the taxpayer acquires, prepares, or has in its possession prior to August 11, 2000, are contained in §1.6011–4T in effect prior to August 11, 2000 (see 26 CFR part 1 revised as of April 1, 2000).

[T.D. 8877, 65 FR 11207, Mar. 2, 2000, as amended by T.D. 8896, 65 FR 49911, Aug. 16, 2000]

§1.6012–1 Individuals required to make returns of income.

(a) *Individual citizen or resident*—(1) *In general.* Except as provided in subparagraph (2) of this paragraph, an income tax return must be filed by every individual for each taxable year beginning before January 1, 1973, during which he receives $600 or more of gross income, and for each taxable year beginning after December 31, 1972, during which he receives $750 or more of gross income, if such individual is:

(i) A citizen of the United States, whether residing at home or abroad,

(ii) A resident of the United States even though not a citizen thereof, or

(iii) An alien bona fide resident of Puerto Rico during the entire taxable year.

(2) *Special rules.* (i) For taxable years beginning before January 1, 1970, an individual who is described in subparagraph (1) of this paragraph and who has attained the age of 65 before the close of his taxable year must file an income tax return only if he receives $1,200 or more of gross income during his taxable year.

(ii) For taxable years beginning after December 31, 1969, and before January 1, 1973, an individual described in subparagraph (1) of this paragraph (other than an individual referred to in section 142(b)):

(a) Who is not married (as determined by applying section 143(a) and the regulations thereunder) must file an income tax return only if he receives $1,700 or more of gross income during his taxable year, except that if such an individual has attained the age of 65 before the close of his taxable year an income tax return must be filed by such individual only if he receives $2,300 or more of gross income during his taxable year.

(b) Who is entitled to make a joint return under section 6013 and the regulations thereunder must file an income tax return only if his gross income received during his taxable year, when combined with the gross income of his spouse received during his taxable

year, is $2,300 or more. However, if such individual or his spouse has attained the age of 65 before the close of the taxable year an income tax return must be filed by such individual only if their combined gross income is $2,900 or more. If both the individual and his spouse have attained the age of 65 before the close of the taxable year such return must be filed only if their combined gross income is $3,500 or more. However, this subdivision (ii)*(b)* shall not apply if the individual and his spouse did not have the same household as their home at the close of their taxable year, if such spouse files a separate return for a taxable year which includes any part of such individual's taxable year, or if any other taxpayer is entitled to an exemption for such individual or his spouse under section 151(e) for such other taxpayer's taxable year beginning in the calendar year in which such individual's taxable year begins. For example, a married student more than half of whose support is furnished by his father must file an income tax return if he receives $600 or more of gross income during his taxable year.

(iii) For taxable years beginning after December 31, 1972, an individual described in subparagraph (1) of this paragraph (other than an individual referred to in section 142(b)):

(a) Who is not married (as determined by applying section 143(a) and the regulations thereunder) must file an income tax return only if he receives $1,750 or more of gross income during his taxable year, except that if such an individual has attained the age of 65 before the close of his taxable year an income tax return must be filed by such individual only if he receives $2,500 or more of gross income during his taxable year.

(b) Who is entitled to make a joint return under section 6013 and the regulations thereunder must file an income tax return only if his gross income received during his taxable year, when combined with the gross income of his spouse received during his taxable year, is $2,500 or more. However, if such individual or his spouse has attained the age of 65 before the close of the taxable year an income tax return must be filed by such individual only if their combined gross income is $3,250 or more. If both the individual and his spouse attain the age of 65 before the close of the taxable year such return must be filed only if their combined gross income is $4,000 or more. However, this subdivision (iii)*(b)* shall not apply if the individual and his spouse did not have the same household as their home at the close of their taxable year, if such spouse files a separate return for a taxable year which includes any part of such individual's taxable year, or if any other taxpayer is entitled to an exemption for the taxpayer or his spouse under section 151(e) for such other taxpayer's taxable year beginning in the calendar year in which such individual's taxable year begins. For example, a married student more than half of whose support is furnished by his father must file an income tax return if he receives $750 or more of gross income during the taxable year.

(iv) For purposes of section 6012(a)(1)(A)(ii) and subdivisions (ii)*(b)* and (iii)*(b)* of this subparagraph, an individual and his spouse are considered to have the same household as their home at the close of a taxable year if the same household constituted the principal place of abode of both the individual and his spouse at the close of such taxable year (or on the date of death, if the individual or his spouse died within the taxable year). The individual and his spouse will be considered to have the same household as their home at the close of the taxable year notwithstanding a temporary absence from the household due to special circumstances, as, for example, in the case of a nonpermanent failure on the part of the individual and his spouse to have a common abode by reason of illness, education, business, vacation, or military service. For example, A, a calendar-year individual under 65 years of age, is married to B, also under 65 years of age, and is a member of the Armed Forces of the United States. During 1970 A is transferred to an overseas base. A and B give up their home, which they had jointly occupied until that time; B moves to the home of her parents for the duration of A's absence. They fully intend to set up a new joint household upon A's return. Neither A nor B must file a return for 1970 if their

combined gross income for the year is less than $2,300 and if no other taxpayer is entitled to a dependency exemption for A or B under section 151(e).

(v) In the case of a short taxable year referred to in section 443(a)(1), an individual described in subparagraph (1) of this paragraph shall file an income tax return if his gross income received during such short taxable year equals or exceeds his own personal exemption allowed by section 151(b) (prorated as provided in section 443(c)) and, when applicable, his additional exemption for age 65 or more allowed by section 151(c)(1) (prorated as provided in section 443(c)).

(vi) For rules relating to returns required to be made by every individual who is liable for one or more qualified State individual income taxes, as defined in section 6362, for a taxable year, see paragraph (b) of § 301.6361–1 of this chapter (Regulations on Procedure and Administration).

(vii) For taxable years beginning after December 31, 1978, an individual who receives payments during the calendar year in which the taxable year begins under section 3507 (relating to advance payment of earned income credit) must file an income tax return.

(3) *Earned income from without the United States and gain from sale of residence.* For the purpose of determining whether an income tax return must be filed for any taxable year beginning after December 31, 1957, gross income shall be computed without regard to the exclusion provided for in section 911 (relating to earned income from sources without the United States). For the purpose of determining whether an income tax return must be filed for any taxable year ending after December 31, 1963, gross income shall be computed without regard to the exclusion provided for in section 121 (relating to sale of residence by individual who has attained age 65). In the case of an individual claiming an exclusion under section 121, he shall attach Form 2119 to the return required under this paragraph and in the case of an individual claiming an exclusion under section 911, he shall attach Form 2555 to the return required under this paragraph.

(4) *Return of income of minor.* A minor is subject to the same requirements and elections for making returns of income as are other individuals. Thus, for example, for a taxable year beginning after December 31, 1972, a return must be made by or for a minor who has an aggregate of $1,750 of gross income from funds held in trust for him and from his personal services, regardless of the amount of his taxable income. The return of a minor must be made by the minor himself or must be made for him by his guardian or other person charged with the care of the minor's person or property. See paragraph (b)(3) of § 1.6012–3. See § 1.73–1 for inclusion in the minor's gross income of amounts received for his personal services. For the amount of tax which is considered to have been properly assessed against the parent, if not paid by the child, see section 6201(c) and paragraph (c) of § 301.6201–1 of this chapter (Regulations on Procedure and Administration).

(5) *Returns made by agents.* The return of income may be made by an agent if, by reason of disease or injury, the person liable for the making of the return is unable to make it. The return may also be made by an agent if the taxpayer is unable to make the return by reason of continuous absence from the United States (including Puerto Rico as if a part of the United States) for a period of at least 60 days prior to the date prescribed by law for making the return. In addition, a return may be made by an agent if the taxpayer requests permission, in writing, of the district director for the internal revenue district in which is located the legal residence or principal place of business of the person liable for the making of the return, and such district director determines that good cause exists for permitting the return to be so made. However, assistance in the preparation of the return may be rendered under any circumstances. Whenever a return is made by an agent it must be accompanied by a power of attorney (or copy thereof) authorizing him to represent his principal in making, executing, or filing the return. A form 2848, when properly completed, is sufficient. In addition, where one spouse is physically unable by reason of disease

or injury to sign a joint return, the other spouse may, with the oral consent of the one who is incapacitated, sign the incapacitated spouse's name in the proper place on the return followed by the words ''By _____ Husband (or Wife),'' and by the signature of the signing spouse in his own right, provided that a dated statement signed by the spouse who is signing the return is attached to and made a part of the return stating:

(i) The name of the return being filed,

(ii) The taxable year,

(iii) The reason for the inability of the spouse who is incapacitated to sign the return, and

(iv) That the spouse who is incapacitated consented to the signing of the return.

The taxpayer and his agent, if any, are responsible for the return as made and incur liability for the penalties provided for erroneous, false, or fraudulent returns.

(6) *Form of return.* Form 1040 is prescribed for general use in making the return required under this paragraph. Form 1040A is an optional short form which, in accordance with paragraph (a)(7) of this section, may be used by certain taxpayers. A taxpayer otherwise entitled to use Form 1040A as his return for any taxable year may not make his return on such form if he elects not to take the standard deduction provided in section 141, and in such case he must make his return on Form 1040. For taxable years beginning before January 1, 1970, a taxpayer entitled under section 6014 and §1.6014–1 to elect not to show his tax on his return must, if he desires to exercise such election, make his return on Form 1040A. Form 1040W is an optional short form which, in accordance with paragraph (a)(8) of this section, may be used only with respect to taxable years beginning after December 31, 1958, and ending before December 31, 1961.

(7)(i) *Use of Form 1040A.* Form 1040A may be filed only by those individuals entitled to use such form as provided by and in accordance with the instructions for such form.

(ii) *Computation and payment of tax.* Unless a taxpayer is entitled to elect under section 6014 and §1.6014–1 not to show the tax on Form 1040A and does so elect, he shall compute and show on his return on Form 1040A the amount of the tax imposed by subtitle A of the Code and shall, without notice and demand therefor, pay any unpaid balance of such tax not later than the date fixed for filing the return.

(iii) *Change of election to use Form 1040A.* A taxpayer who has elected to make his return on Form 1040A may change such election. Such change of election shall be within the time and subject to the conditions prescribed in section 144(b) and §1.144–2 relating to change of election to take, or not to take the standard deduction.

(8) *Use of Form 1040W for certain taxable years*—(i) *In general.* An individual may use Form 1040W as his return for any taxable year beginning after December 31, 1958, and ending before December 31, 1961, in which the gross income of the individual, regardless of the amount thereof:

(a) Consists entirely of remuneration for personal services performed as an employee (whether or not such remuneration constitutes wages as defined in section 3401(a)), dividends, or interest, and

(b) Does not include more than $200 from dividends and interest.

For purposes of determining whether gross income from dividends and interest exceeds $200, dividends from domestic corporations are taken into account to the extent that they are includible in gross income. For purposes of this subparagraph, any reference to Form 1040 in §§1.4–2, 1.142–1, and 1.144–1 and this section shall also be deemed a reference to Form 1040W.

(ii) *Change of election to use Form 1040W.* A taxpayer who has elected to make his return on Form 1040W may change such election. Such change of election shall be within the time and subject to the conditions prescribed in section 144(b) and §1.144–2, relating to change of election to take, or not to take, the standard deduction.

(iii) *Joint return of husband and wife on Form 1040W.* A husband and wife, eligible under section 6013 and the regulations thereunder to file a joint return for the taxable year, may, subject to the provisions of this subparagraph, make a joint return on Form 1040W for

any taxable year beginning after December 31, 1958, and ending before December 31, 1961, in which the aggregate gross income of the spouses (regardless of amount) consists entirely of remuneration for personal services performed as an employee (whether or not such remuneration constitutes wages as defined in section 3401(a)), dividends, or interest, and does not include more than $200 from dividends and interest. For purposes of determining whether gross income from sources to which the $200 limitation applies exceeds such amount in cases where both spouses receive dividends from domestic corporations, the amount of such dividends received by each spouse is taken into account to the extent that such dividends are includible in gross income. See section 116 and §§ 1.116–1 and 1.116–2. If a joint return is made by husband and wife on Form 1040W, the liability for the tax shall be joint and several.

(9) *Items of tax preference.* For a taxable year ending after December 31, 1969, an individual shall attach Form 4625 to the return required by this paragraph if during the year the individual:

(i) Has items of tax preference (described in section 57) in excess of its minimum tax exemption (determined under § 1.58–1) or

(ii) Uses a net operating loss carryover from a prior taxable year in which it deferred minimum tax under section 56(b).

(b) *Return of nonresident alien individual*—(1) *Requirement of return*—(i) *In general.* Except as otherwise provided in subparagraph (2) of this paragraph, every nonresident alien individual (other than one treated as a resident under section 6013 (g) or (h)) who is engaged in trade or business in the United States at any time during the taxable year or who has income which is subject to taxation under subtitle A of the Code shall make a return on Form 1040NR. For this purpose it is immaterial that the gross income for the taxable year is less than the minimum amount specified in section 6012(a) for making a return. Thus, a nonresident alien individual who is engaged in a trade or business in the United States at any time during the taxable year is required to file a return on Form 1040NR even though *(a)* he has no income which is effectively connected with the conduct of a trade or business in the United States, *(b)* he has no income from sources within the United States, or *(c)* his income is exempt from income tax by reason of an income tax convention or any section of the Code. However, if the nonresident alien individual has no gross income for the taxable year, he is not required to complete the return schedules but must attach a statement to the return indicating the nature of any exclusions claimed and the amount of such exclusions to the extent such amounts are readily determinable.

(ii) *Treaty income.* If the gross income of a nonresident alien individual includes treaty income, as defined in paragraph (b)(1) of § 1.871–12, a statement shall be attached to the return on Form 1040NR showing with respect to that income:

(a) The amounts of tax withheld,

(b) The names and post office addresses of withholding agents, and

(c) Such other information as may be required by the return form, or by the instructions issued with respect to the form, to show the taxpayer's entitlement to the reduced rate of tax under the tax convention.

(2) *Exceptions*—(i) *Return not required when tax is fully paid at source.* A nonresident alien individual (other than one treated as a resident under section 6013 (g) or (h)) who at no time during the taxable year is engaged in a trade or business in the United States is not required to make a return for the taxable year if his tax liability for the taxable year is fully satisfied by the withholding of tax at source under chapter 3 of the Code. This subdivision does not apply to a nonresident alien individual who has income for the taxable year which is treated under section 871 (c) or (d) and § 1.871–9 (relating to students or trainees) or § 1.871–10 (relating to real property income) as income which is effectively connected for the taxable year with the conduct of a trade or business in the United States by that individual, or to a nonresident alien individual making a claim under § 301.6402–3 of this chapter (Procedure and Administration Regulations) for the refund of an overpayment of tax for

the taxable year. In addition, this subdivision does not apply to a nonresident alien individual who has income for the taxable year that is treated under section 871(b)(1) as effectively connected with the conduct of a trade or business within the United States by reason of the operation of section 897. For purposes of this subdivision, some of the items of income from sources within the United States upon which the tax liability will not have been fully satisfied by the withholding of tax at source under chapter 3 of the Code are:

(a) Interest upon so-called tax-free covenant bonds upon which, in accordance with section 1451 and §1.1451–1, a tax of only 2 percent is required to be withheld at the source,

(b) In the case of bonds or other evidences of indebtedness issued after September 28, 1965, amounts described in section 871(a)(1)(C),

(c) Capital gains described in section 871(a)(2) and paragraph (d) of §1.871– 7, and

(d) Accrued interest received in connection with the sale of bonds between interest dates, which, in accordance with paragraph (h) of §1.1441–4, is not subject to withholding of tax at the source.

(ii) *Return of individual for taxable year of change of U.S. citizenship or residence. (a)* If an alien individual becomes a citizen or resident of the United States during the taxable year and is a citizen or resident of the United States on the last day of such year, he must make a return on Form 1040 for the taxable year. However, a separate schedule is required to be attached to this return to show the income tax computation for the part of the taxable year during which the alien was neither a citizen nor resident of the United States, unless an election under section 6013 (g) or (h) is in effect for the alien. A Form 1040NR, clearly marked ''Statement'' across the top, may be used as such a separate schedule.

(b) If an individual abandons his U.S. citizenship or residence during the taxable year and is not a citizen or resident of the United States on the last day of such year, he must make a return on Form 1040NR for the taxable year, even if an election under section 6013(g) was in effect for the taxable year preceding the year of abandonment. However, a separate schedule is required to be attached to this return to show the income tax computation for the part of the taxable year during which the individual was a citizen or resident of the United States. A Form 1040, clearly marked ''Statement'' across the top, may be used as such a separate schedule.

(c) A return is required under this subdivision (ii) only if the individual is otherwise required to make a return for the taxable year.

(iii) *Beneficiaries of estates or trusts.* A nonresident alien individual who is a beneficiary of an estate or trust which is engaged in trade or business in the United States is not required to make a return for the taxable year merely because he is deemed to be engaged in trade or business within the United States under section 875(2). However, such nonresident alien beneficiary will be required to make a return if he otherwise satisfies the conditions of subparagraph (1)(i) of this paragraph for making a return.

(iv) *Certain alien residents of Puerto Rico.* This paragraph does not apply to a nonresident alien individual who is a bona fide resident of Puerto Rico during the taxable year. See section 876 and paragraph (a)(1)(iii) of this section.

(3) *Representative or agent for nonresident alien individual*—(i) *Cases where power of attorney is not required.* The responsible representative or agent within the United States of a nonresident alien individual shall make on behalf of his nonresident alien principal a return of, and shall pay the tax on, all income coming within his control as representative or agent which is subject to the income tax under subtitle A of the Code. The agency appointment will determine how completely the agent is substituted for the principal for tax purposes. Any person who collects interest or dividends on deposited securities of a nonresident alien individual, executes ownership certificates in connection therewith, or sells such securities under special instructions shall not be deemed merely by reason of such acts to be the responsible representative or agent of the nonresident

alien individual. If the responsible representative or agent does not have a specific power of attorney from the nonresident alien individual to file a return in his behalf, the return shall be accompanied by a statement to the effect that the representative or agent does not possess specific power of attorney to file a return for such individual but that the return is being filed in accordance with the provisions of this subdivision.

(ii) *Cases where power of attorney is required*. Whenever a return of income of a nonresident alien individual is made by an agent acting under a duly authorized power of attorney for that purpose, the return shall be accompanied by the power of attorney in proper form, or a copy thereof, specifically authorizing him to represent his principal in making, executing, and filing the income tax return. Form 2848 may be used for this purpose. The agent, as well as the taxpayer, may incur liability for the penalties provided for erroneous, false, or fraudulent returns. For the requirements regarding signing of returns, see § 1.6061–1. The rules of paragraph (e) of § 601.504 of this chapter (Statement of Procedural Rules) shall apply under this subparagraph in determining whether a copy of a power of attorney must be certified.

(iii) *Limitation*. A return of income shall be required under this subparagraph only if the nonresident alien individual is otherwise required to make a return in accordance with this paragraph.

(4) *Disallowance of deductions and credits*. For provisions disallowing deductions and credits when a return of income has not been filed by or on behalf of a nonresident alien individual, see section 874(a) and the regulations thereunder.

(5) *Effective date*. This paragraph shall apply for taxable years beginning after December 31, 1966, except that it shall not be applied to require (i) the filing of a return for any taxable year ending before January 1, 1974, which, pursuant to instructions applicable to the return, is not required to be filed or (ii) the amendment of a return for such a taxable year which, pursuant to such instructions, is required to be filed. For corresponding rules applicable to taxable years beginning before January 1, 1967, see 26 CFR 1.6012–1(b) (Revised as of January 1, 1967).

(c) *Cross reference*. For returns by fiduciaries for individuals, estates, and trusts, see § 1.6012–3.

(Sec. 1445 (98 Stat. 655; 26 U.S.C. 1445), sec. 6012 (68A Stat. 732; 26 U.S.C. 6012), and 7805 (68A Stat. 917; 26 U.S.C. 7805) of the Internal Revenue Code of 1954)

[T.D. 6500, 25 FR 12108, Nov. 26, 1960]

EDITORIAL NOTE: For FEDERAL REGISTER citations affecting § 1.6012–1, see the List of CFR Sections Affected in the Finding Aids section of this volume.

§ 1.6012–2 Corporations required to make returns of income.

(a) *In general*—(1) *Requirement of return*. Except as provided in paragraphs (e) and (g)(1) of this section with respect to charitable and other organizations having unrelated business income and to certain foreign corporations, respectively, every corporation, as defined in section 7701(a)(3), subject to taxation under subtitle A of the Code shall make a return of income regardless of whether it has taxable income or regardless of the amount of its gross income.

(2) *Existence of corporation*. A corporation in existence during any portion of a taxable year is required to make a return. If a corporation was not in existence throughout an annual accounting period (either calendar year or fiscal year), the corporation is required to make a return for that fractional part of a year during which it was in existence. A corporation is not in existence after it ceases business and dissolves, retaining no assets, whether or not under State law it may thereafter be treated as continuing as a corporation for certain limited purposes connected with winding up its affairs, such as for the purpose of suing and being sued. If the corporation has valuable claims for which it will bring suit during this period, it has retained assets and therefore continues in existence. A corporation does not go out of existence if it is turned over to receivers or trustees who continue to operate it. If a corporation has received a charter but has never perfected its organization and has transacted no business and has no

income from any source, it may upon presentation of the facts to the district director be relieved from the necessity of making a return. In the absence of a proper showing of such facts to the district director, a corporation will be required to make a return.

(3) *Form of return.* The return required of a corporation under this section shall be made on Form 1120 unless the corporation is a type for which a special form is prescribed. The special forms of returns and schedules required of particular types of corporations are set forth in paragraphs (b) to (g), inclusive, of this section.

(b) *Personal holding companies.* A personal holding company, as defined in section 542, including a foreign corporation within the definition of such section, shall attach Schedule PH, Computation of U.S. Personal Holding Company Tax, to the return required by paragraph (a) or (g), as the case may be, of this section.

(c) *Insurance companies*—(1) *Life insurance companies.* A life insurance company subject to tax under section 802 or 811 shall make a return on Form 1120L. There shall be filed with the return (i) a copy of the annual statement, the form of which has been approved by the National Association of Insurance Commissioners, which is filed by the company for the year covered by such return with the insurance departments of States, Territories, and the District of Columbia, and which shows the reserves used by the company in computing the taxable income reported on its return, and (ii) copies of Schedule A (real estate) and Schedule D (bonds and stocks) of such annual statement.

(2) *Mutual insurance companies.* A mutual insurance company (other than a life or marine insurance company and other than a fire insurance company subject to the tax imposed by section 831) or an interinsurer or reciprocal underwriter subject to tax under section 821 shall make a return on Form 1120M. See paragraph (a)(3) of § 1.821–1. There shall be filed with the return (i) a copy of the annual statement, the form of which has been approved by the National Association of Insurance Commissioners, which is filed by the company for the year covered by such return with the insurance departments of States, Territories, and the District of Columbia, and (ii) copies of Schedule A (real estate) and Schedule D (bonds and stocks) of such annual statement.

(3) *Other insurance companies.* Every insurance company (other than a life or mutual insurance company), every mutual marine insurance company, and every mutual fire insurance company, subject to tax under section 831, and every mutual savings bank conducting a life insurance business and subject to tax under section 594, shall make a return on Form 1120. See paragraph (c) of § 1.831–1. There shall be filed with the return a copy of the annual statement, the form of which has been approved by the National Association of Insurance Commissioners, which contains the underwriting and investment exhibit for the year covered by such return.

(4) *Foreign insurance companies.* The provisions of subparagraphs (1), (2), and (3) of this paragraph concerning the returns and statements of insurance companies subject to tax under section 802 or 811, section 821, and section 831, respectively, are applicable to foreign insurance companies subject to tax under such sections, except that the copy of the annual statement, the form of which has been approved by the National Association of Insurance Commissioners, required to be submitted with the return shall, in the case of a foreign insurance company, be a copy of the statement relating to the United States business of such company.

(d) *Affiliated groups.* For the forms to be used by affiliated corporations filing a consolidated return, see § 1.1502–75.

(e) *Charitable and other organizations with unrelated business income.* Every organization described in section 511(a)(2) which is subject to the tax imposed by section 511(a)(1) on its unrelated business taxable income shall make a return on Form 990–T for each taxable year if it has gross income, included in computing unrelated business taxable income for such taxable year, of $1,000 or more. The filing of a return of unrelated business income does not relieve the organization of the duty of filing other required returns.

(f) *Farmers' cooperatives.* Farmers' cooperative organizations described in

section 521 are required to make a return of income whether or not such organizations are subject to the taxes imposed by sections 11 and 1201 as prescribed in section 522 or 1381. The return shall be made on Form 990–C.

(g) *Returns by foreign corporations.* (1) *Requirement of return*—(i) *In general.* Except as otherwise provided in subparagraph (2) of this paragraph, every foreign corporation which is engaged in trade or business in the United States at any time during the taxable year or which has income which is subject to taxation under subtitle A of the Code (relating to income taxes) shall make a return on Form 1120–F. Thus, for example, a foreign corporation which is engaged in trade or business in the United States at any time during the taxable year is required to file a return on Form 1120–F even though *(a)* it has no income which is effectively connected with the conduct of a trade or business in the United States, *(b)* it has no income from sources within the United States, or *(c)* its income is exempt from income tax by reason of an income tax convention or any section of the Code. However, if the foreign corporation has no gross income for the taxable year, it is not required to complete the return schedules but must attach a statement to the return indicating the nature of any exclusions claimed and the amount of such exclusions to the extent such amounts are readily determinable.

(ii) *Treaty income.* If the gross income of a foreign corporation includes treaty income, as defined in paragraph (b)(1) of §1.871–12, a statement shall be attached to the return on Form 1120–F showing with respect to that income:

(a) The amounts of tax withheld,

(b) The names and post office addresses of withholding agents, and

(c) Such other information as may be required by the return form or by the instructions issued with respect to the form, to show the taxpayer's entitlement to the reduced rate of tax under the tax convention.

(iii) *Balance sheet and reconciliation of income.* At the election of the taxpayer, the balance sheets and reconciliation of income, as shown on Form 1120–F, may be limited to:

(a) The assets of the corporation located in the United States and to its other assets used in the trade or business conducted in the United States, and

(b) Its income effectively connected with the conduct of a trade or business in the United States and its other income from sources within the United States.

(2) *Exceptions*—(i) *Return not required when tax is fully paid at source—(a) In general.* A foreign corporation which at no time during the taxable year is engaged in a trade or business in the United States is not required to make a return for the taxable year if its tax liability for the taxable year is fully satisfied by the withholding of tax at source under chapter 3 of the Code. For purposes of this subdivision, some of the items of income from sources within the United States upon which the tax liability will not have been fully satisfied by the withholding of tax at source under chapter 3 of the Code are:

(1) Interest upon so-called tax-free covenant bonds upon which, in accordance with section 1451 and §1.1451–1, a tax of only 2 percent is required to be withheld at source,

(2) In the case of bonds or other evidence of indebtedness issued after September 25, 1965, amounts described in section 881(a)(3),

(3) Accrued interest received in connection with the sale of bonds between interest dates, which, in accordance with paragraph (h) of §1.1441–4, is not subject to withholding of tax at source.

(b) Corporations not included. This subdivision (i) shall not apply:

(1) To a foreign corporation which has income for the taxable year which is treated under section 882(d) or (e) and §1.882–2 as income which is effectively connected for the taxable year with the conduct of a trade or business in the United States by that corporation,

(2) To a foreign corporation making a claim under §301.6402–3 of this chapter (Procedure and Administration Regulations) for the refund of an overpayment of tax for the taxable year, or

(3) To a foreign corporation described in paragraph (c)(2)(i) of §1.532–1 whose accumulated taxable income for the

taxable year is determined under paragraph (b)(2) of § 1.535–1.

(ii) *Beneficiaries of estates or trusts.* A foreign corporation which is a beneficiary of an estate or trust which is engaged in trade or business in the United States is not required to make a return for the taxable year merely because it is deemed to be engaged in trade or business within the United States under section 875(2). However, such foreign corporation will be required to make a return if it otherwise satisfies the conditions of subparagraph (1)(i) of this paragraph for making a return.

(iii) *Special returns and schedules.* The provisions of paragraphs (b) through (f) of this section shall apply to a foreign corporation except that a foreign corporation which is an insurance company to which paragraph (c)(3) of this section applies shall make a return on Form 1120–F and not on Form 1120. If a foreign corporation which is an insurance company to which paragraph (c)(1) or (2) of this section applies has income for the taxable year from sources within the United States which is not effectively connected for that year with the conduct of a trade or business in the United States by that corporation, the corporation shall attach to its return on Form 1120L or 1120M, as the case may be, a separate schedule showing the nature and amount of the items of such income, the rate of tax applicable thereto, and the amount of tax withheld therefrom under chapter 3 of the Code.

(3) *Representative or agent for foreign corporation*—(i) *Cases where power of attorney is not required.* The responsible representative or agent within the United States of a foreign corporation shall make on behalf of his principal a return of, and shall pay the tax on, all income coming within his control as representative or agent which is subject to the income tax under subtitle A of the Code. The agency appointment will determine how completely the agent is substituted for the principal for tax purposes. Any person who collects interest or dividends on deposited securities of a foreign corporation, executes ownership certificates in connection therewith, or sells such securities under special instructions shall not be deemed merely by reason of such acts to be the responsible representative or agent of the foreign corporation. If the responsible representative or agent does not have a specific power of attorney from the foreign corporation to file a return in its behalf, the return shall be accompanied by a statement to the effect that the representative or agent does not possess specific power of attorney to file a return for such corporation but that the return is being filed in accordance with the provisions of this subdivision.

(ii) *Cases where power of attorney is required.* Whenever a return of income of a foreign corporation is made by an agent acting under a duly authorized power of attorney for that purpose, the return shall be accompanied by the power of attorney in proper form, or a copy thereof specifically authorizing him to represent his principal in making, executing, and filing the income tax return. Form 2848 may be used for this purpose. The agent, as well as the taxpayer, may incur liability for the penalties provided for erroneous, false, or fraudulent returns. For the requirements regarding signing of returns, see § 1.6062–1. The rules of paragraph (e) of § 601.504 of this chapter (Statement of Procedural Rules) shall apply under this subparagraph in determining whether a copy of a power of attorney must be certified.

(iii) *Limitation.* A return of income shall be required under this subparagraph only if the foreign corporation is otherwise required to make a return in accordance with this paragraph.

(4) *Disallowance of deductions and credits.* For provisions disallowing deductions and credits when a return of income has not been filed by or on behalf of a foreign corporation, see section 882(c)(2) and the regulations thereunder, and paragraph (b) (2) and (3) of § 1.535–1.

(5) *Effective date.* This paragraph shall apply for taxable years beginning after December 31, 1966, except that it shall not be applied to require (i) the filing of a return for any taxable year ending before January 1, 1974, which, pursuant to instructions applicable to the return, is not required to be filed or (ii) the amendment of a return for such a taxable year which, pursuant to such

instructions, is required to be filed. For corresponding rules applicable to taxable years beginning before January 1, 1967, see 26 CFR 1.6012–2(g) (Revised as of January 1, 1967).

(h) *Electing small business corporations.* An electing small business corporation, whether or not subject to the tax imposed by section 1378, shall make a return on Form 1120–S. See also section 6037 and the regulations thereunder.

(i) *Items of tax preference*—(1) *In general.* Every corporation required to make a return under this section, and having items of tax preference (described in section 57 and the regulation thereunder) in an amount specified by Form 4626, shall file such form as part of its return.

(2) *Organizations with unrelated business income and foreign corporations.* Regardless of the provisions of paragraphs (e) and (g) of this section, any organization described in either such paragraph having items of tax preference (described in section 57 and the regulations thereunder) in any amount entering into the computation or unrelated business income is required to make a return on form 990–T or form 120F, respectively, and to attach the required form as part of such return.

(j) *Other provisions.* For returns by fiduciaries for corporations, see § 1.6012–3. For information returns by corporations regarding payments of dividends, see §§ 1.6042–1 to 1.6042–3, inclusive; regarding corporate dissolutions or liquidations, see § 1.6043–1; regarding distributions in liquidation, see § 1.6043–2; regarding payments of patronage dividends, see §§ 1.6044–1 to 1.6044–4, inclusive; and regarding certain payments of interest, see §§ 1.6049–1 and 1.6049–2. For information returns of officers, directors, and shareholders of foreign personal holding companies, as defined in section 552, see §§ 1.6035–1 and 1.6035–2. For returns as to formation or reorganization of foreign corporations, see §§ 1.6046–1 to 1.6046–3, inclusive.

[T.D. 6500, 25 FR 12108, Nov. 26, 1960]

EDITORIAL NOTE: For FEDERAL REGISTER citations affecting § 1.6012–2, see the List of CFR Sections Affecting in the Finding Aids section of this volume.

§ 1.6012–3 Returns by fiduciaries.

(a) *For estates and trusts*—(1) *In general.* Every fiduciary, or at least one of joint fiduciaries, must make a return of income on form 1041 (or by use of a composite return pursuant to § 1.6012–5) and attach the required form if the estate or trust has items of tax preference (as defined in section 57 and the regulations thereunder) in any amount:

(i) For each estate for which he acts if the gross income of such estate for the taxable year is $600 or more;

(ii) For each trust for which he acts, except a trust exempt under section 501(a), if such trust has for the taxable year any taxable income, or has for the taxable year gross income of $600 or more regardless of the amount of taxable income; and

(iii) For each estate and each trust for which he acts, except a trust exempt under section 501(a), regardless of the amount of income for the taxable year, if any beneficiary of such estate or trust is a nonresident alien.

(2) *Wills and trust instruments.* At the request of the Internal Revenue Service, a copy of the will or trust instrument (including any amendments), accompanied by a written declaration of the fiduciary under the penalties of perjury that it is a true and complete copy, shall be filed together with a statement by the fiduciary indicating the provisions of the will or trust instrument (including any amendments) which, in the fiduciary's opinion, determine the extent to which the income of the estate or trust is taxable to the estate or trust, the beneficiaries, or the grantor, respectively.

(3) *Domiciliary and ancillary representatives.* In the case of an estate required to file a return under subparagraph (1) of this paragraph, having both domiciliary and ancillary representatives, the domiciliary and ancillary representatives must each file a return on Form 1041. The domiciliary representative is required to include in the return rendered by him as such domiciliary representative the entire income of the estate. The return of the ancillary representative shall be filed with the district director for his internal revenue district and shall show the name and

address of the domiciliary representative, the amount of gross income received by the ancillary representative, and the deductions to be claimed against such income, including any amount of income properly paid or credited by the ancillary representative to any legatee, heir, or other beneficiary. If the ancillary representative for the estate of a nonresident alien is a citizen or resident of the United States, and the domiciliary representative is a nonresident alien, such ancillary representative is required to render the return otherwise required of the domiciliary representative.

(4) *Two or more trusts.* A trustee of two or more trusts must make a separate return for each trust, even though such trusts were created by the same grantor for the same beneficiary or beneficiaries.

(5) *Trusts with unrelated business income.* Every fiduciary for a trust described in section 511(b)(2) which is subject to the tax imposed on its unrelated business taxable income by section 511(b)(1) shall make a return on Form 990–T for each taxable year if the trust has gross income, included in computing unrelated business taxable income for such taxable year, of $1,000 or more. The filing of a return of unrelated business income does not relieve the fiduciary of such trust from the duty of filing other required returns.

(6) *Charitable remainder trusts.* Every fiduciary for a charitable remainder annuity trust (as defined in §1.664–2) or a charitable remainder unitrust (as defined in §1.664–3) shall make a return on Form 1041–B for each taxable year of the trust even though it is nonexempt because it has unrelated business taxable income. The return on Form 1041–B shall be made in accordance with the instructions for the form and shall be filed with the designated Internal Revenue office on or before the 15th day of the fourth month following the close of the taxable year of the trust. A copy of the instrument governing the trust, accompanied by a written declaration of the fiduciary under the penalties of perjury that it is a true and complete copy, shall be attached to the return for the first taxable year of the trust.

(7) *Certain trusts described in section 4947(a)(1).* For taxable years beginning after December 31, 1980, in the case of a trust described in section 4947(a)(1) which has no taxable income for a taxable year, the filing requirements of section 6012 and this section shall be satisfied by the filing, pursuant to §53.6011–1 of this chapter (Foundation Excise Tax Regulations) and §1.6033–2(a), by the fiduciary of such trust of—

(i) Form 990–PF if such trust is treated as a private foundation, or

(ii) Form 990 if such trust is not treated as a private foundation.

When the provisions of this paragraph (a)(7) are met, the fiduciary shall not be required to file Form 1041.

(8) *Estate and trusts liable for qualified tax.* In the case of an estate or trust which is liable for one or more qualified State individual income taxes, as defined in section 6362, for a taxable year, see paragraph (b) of §301.6361–1 of this chapter (Regulations on Procedure and Administration) for rules relating to returns required to be made.

(9) *A trust any portion of which is treated as owned by the grantor or another person pursuant to sections 671 through 678.* In the case of a trust any portion of which is treated as owned by the grantor or another person under the provisions of subpart E (section 671 and following) part I, subchapter J, chapter 1 of the Internal Revenue Code see §1.671–4.

(b) *For other persons*—(1) *Decedents.* The executor or administrator of the estate of a decedent, or other person charged with the property of a decedent, shall make the return of income required in respect of such decedent. For the decedent's taxable year which ends with the date of his death, the return shall cover the period during which he was alive. For the filing of returns of income for citizens and alien residents of the United States, and alien residents of Puerto Rico, see paragraph (a) of §1.6012–1. For the filing of a joint return after death of spouse, see paragraph (d) of §1.6013–1.

(2) *Nonresident alien individuals*—(i) *In general.* A resident or domestic fiduciary or other person charged with the care of the person or property of a nonresident alien individual shall make a return for that individual and pay the tax unless:

(a) The nonresident alien individual makes a return of, and pays the tax on, his income for the taxable year,

(b) A responsible representative or agent in the United States of the nonresident alien individual makes a return of, and pays the tax on, the income of such alien individual for the taxable year, or

(c) The nonresident alien individual has appointed a person in the United States to act as his agent for the purpose of making a return of income and, if such fiduciary is required to file a Form 1041 for an estate or trust of which such alien individual is a beneficiary, such fiduciary attaches a copy of the agency appointment to his return on Form 1041.

(ii) *Income to be returned*. A return of income shall be required under this subparagraph only if the nonresident alien individual is otherwise required to make a return in accordance with paragraph (b) of § 1.6012–1. The provisions of that paragraph shall apply in determining the form of return to be used and the income to be returned.

(iii) *Disallowance of deductions and credits*. For provisions disallowing deductions and credits when a return of income has not been filed by or on behalf of a nonresident alien individual, see section 874 and the regulations thereunder.

(iv) *Alien resident of Puerto Rico*. This subparagraph shall not apply to the return of a nonresident alien individual who is a bona fide resident of Puerto Rico during the entire taxable year. See § 1.876–1.

(v) *Cross reference*. For requirements of withholding tax at source on nonresident alien individuals and of returns with respect to such withheld taxes, see §§ 1.1441–1 to 1.1465–1, inclusive.

(3) *Persons under a disability*. A fiduciary acting as the guardian of a minor, or as the guardian or committee of an insane person, must make the return of income required in respect of such person unless, in the case of a minor, the minor himself makes the return or causes it to be made.

(4) *Corporations*. A receiver, trustee in dissolution, trustee in bankruptcy, or assignee, who, by order of a court of competent jurisdiction, by operation of law or otherwise, has possession of or holds title to all or substantially all the property or business of a corporation, shall make the return of income for such corporation in the same manner and form as corporations are required to make such returns. Such return shall be filed whether or not the receiver, trustee, or assignee is operating the property or business of the corporation. A receiver in charge of only a small part of the property of a corporation, such as a receiver in mortgage foreclosure proceedings involving merely a small portion of its property, need not make the return of income. See also § 1.6041–1, relating to returns regarding information at source; §§ 1.6042–1 to 1.6042–3, inclusive, relating to returns regarding payments of dividends; §§ 1.6044–1 to 1.6044–4, inclusive, relating to returns regarding payments of patronage dividends; and §§ 1.6049–1 and 1.6049–2, relating to returns regarding certain payments of interest.

(5) *Individuals in receivership*. A receiver who stands in the place of an individual must make the return of income required in respect of such individual. A receiver of only part of the property of an individual need not file a return, and the individual must make his own return.

(c) *Joint fiduciaries*. In the case of joint fiduciaries, a return is required to be made by only one of such fiduciaries. A return made by one of joint fiduciaries shall contain a statement that the fiduciary has sufficient knowledge of the affairs of the person for whom the return is made to enable him to make the return, and that the return is, to the best of his knowledge and belief, true and correct.

(d) *Other provisions*. For the definition of the term ''fiduciary'', see section 7701(a)(6) and the regulations thereunder. For information returns required to be made by fiduciaries under section 6041, see § 1.6041–1. As to further duties and liabilities of fiduciaries, see section 6903 and § 301.6903–1 of this chapter (Regulations on Procedure and Administration).

[T.D. 6500, 25 FR 12108, Nov. 26, 1960]

EDITORIAL NOTE: For FEDERAL REGISTER citations affecting § 1.6012–3, see the List of CFR Sections Affecting in the Finding Aids section of this volume.

§ 1.6012–4 Miscellaneous returns.

For returns by regulated investment companies of tax on undistributed capital gain designated for special treatment under section 852(b)(3)(D), see § 1.852–9. For returns with respect to tax withheld on nonresident aliens and foreign corporations and on tax-free covenant bonds, see §§ 1.1461–1 to 1.1465–1, inclusive. For returns of tax on transfers to avoid income tax, see § 1.1494–1. For the requirement of an annual report by persons completing a Government contract, see 26 CFR (1939) 17.16 (Treasury Decision 4906, approved June 23, 1939), and 26 CFR (1939) 16.15 (Treasury Decision 4909, approved June 28, 1939) , as made applicable to section 1471 of the 1954 Code by Treasury Decision 6091, approved August 16, 1954 (19 FR 5167, C.B. 1954–2, 47). See also § 1.1471–1.

[T.D. 7332, 39 FR 44231, Dec. 23, 1974]

EDITORIAL NOTE: For the convenience of the user §§ 16.15 and 17.16 of 26 CFR (1939) are set forth below:

§ 16.15 *Annual reports for income taxable years*—(a) *General requirements.* Every contracting party completing a contract or subcontract within the contracting party's income-taxable year ending after April 3, 1939 shall file with the district director of internal revenue for the internal revenue district in which the contracting party's Federal income tax returns are required to be filed an annual report on the prescribed form of the profit and excess profit on all contracts and subcontracts coming within the scope of the act and the regulations in this part and completed within the particular income-taxable year. There shall be included as a part of such a report a statement, preferably in columnar form, showing separately for each such contract or subcontract completed by the contracting party within the income-taxable year the total contract price, the cost of performing the contract or subcontract and the resulting profit or loss on each contract or subcontract together with a summary statement showing in detail the computation of the net profit or net loss upon all contracts and subcontracts completed within the income-taxable year and the amount of the excess profit, if any, for the income-taxable year covered by the report. A copy of the report made to the Secretary of the Army (see § 16.14) with respect to each contract or subcontract covered in the annual report, shall be filed as a part of such annual report. In case the income-taxable year of the contracting party is a period of less than twelve months (see § 16.1), the report required by this section shall be made for such period and not for a full year.

(b) *Time for filing annual reports.* Annual reports of contracts and subcontracts coming within the scope of the act and the regulations in this part completed by a contracting party within an income-taxable year must be filed on or before the 15th day of the ninth month following the close of the contracting party's income-taxable year. It is important that the contracting party render on or before the due date an annual report as nearly complete and final as it is possible for the contracting party to prepare. An extension of time granted the contracting party for filing its Federal income tax return does not serve to extend the time for filing the annual report required by this section. Authority consistent with authorizations for granting extensions of time for filing Federal income tax returns is hereby delegated to the various collectors of internal revenue for granting extensions of time for filing the reports required by this section. Application for extensions of time for filing such reports should be addressed to the district director of internal revenue for the district in which the contracting party files its Federal income tax returns and must contain a full recital of the causes for the delay.

§ 17.16 *Annual reports for income-taxable years*—(a) *General requirements.* Every contracting party completing a contract or subcontract within the contracting party's income-taxable year ending after April 3, 1939 shall file, with the district director of internal revenue for the internal revenue district in which the contracting party's Federal income tax return is required to be filed, annual reports on the prescribed forms of the profit and excess profit on all contracts and subcontracts coming within the scope of the act. If any contracts or subcontracts so completed by the contracting party were entered into for the construction or manufacture of any complete naval vessel or any portion thereof, the profit and excess profit on all such contracts and subcontracts completed within the income-taxable year ending after April 3, 1939 shall be computed in accordance with the provisions of § 17.6. If any contracts or subcontracts so completed by the contracting party were entered into for the construction or manufacture of any complete naval aircraft or any portion thereof, the profit and excess profit on all such contracts and subcontracts completed within the income-taxable year ending after April 3, 1939 shall be computed in accordance with the provisions of § 17.7. There shall be included as a part of the annual report a statement, preferably in columnar form, showing separately for each contract or subcontract completed by the contracting party within the income-taxable year and covered by the report, the total contract price, the cost of performing the contract or subcontract and resulting

profit or loss on each contract or subcontract together with a summary statement showing in detail the computation of the net profit or net loss upon each group of contracts and subcontracts covered by the report and the amount of the excess profit, if any, with respect to each group of contracts and subcontracts covered by the report. A copy of the report made to the Secretary of the Navy (see §17.15) with respect to each contract or subcontract covered in the annual report, shall be filed as a part of such annual report. In case the income-taxable year of the contracting party is a period of less than twelve months (see §17.1), the reports required by this section shall be made for such period and not for a full year.

(b) *Time for filing annual reports.* Annual reports of contracts and subcontracts completed by a contracting party within an income-taxable year ending after April 3, 1939 shall be filed on or before the 15th day of the ninth month following the close of the contracting party's income-taxable year. It is important that the contracting party render on or before the due date annual reports as nearly complete and final as it is possible for the contracting party to prepare. An extension of time granted the contracting party for filing its Federal income tax return does not serve to extend the time for filing the annual reports required by this section. Authority consistent with authorizations for granting extensions of time for filing Federal income tax returns is hereby delegated to the various district directors of internal revenue for granting extensions of time for filing the reports required by this section. Application for extension of time for filing such reports should be addressed to the district director of internal revenue for the district in which the contracting party files its Federal income tax returns and must contain a full recital of the causes for the delay.

§ 1.6012–5 Composite return in lieu of specified form.

The Commissioner may authorize the use, at the option of a person required to make a return, of a composite return in lieu of any form specified in this part for use by such a person, subject to such conditions, limitations, and special rules governing the preparation, execution, filing, and correction thereof as the Commissioner may deem appropriate. Such composite return shall consist of a form prescribed by the Commissioner and an attachment or attachments of magnetic tape or other approved media. Notwithstanding any provisions in this part to the contrary, a single form and attachment may comprise the returns of more than one such person. To the extent that the use of a composite return has been authorized by the Commissioner, references in this part to a specific form for use by such a person shall be deemed to refer also to a composite return under this section.

[T.D. 7200, 37 FR 16544, Aug. 16, 1972]

§ 1.6012–6 Returns by political organizations.

(a) *Requirement of return*—(1) *In general.* For taxable years beginning after December 31, 1974, every political organization described in section 527(e)(1), and every fund described in section 527(f)(3) or section 527(g), and every organization described in section 501(c) and exempt from taxation under section 501(a) shall make a return of income within the time provided in section 6072(b), if a tax is imposed on such an organization or fund by section 527(b).

(2) *Taxable years beginning after December 31, 1971, and before January 1, 1975.* For taxable years beginning after December 31, 1971, and before January 1, 1975, any political organization which would be described in section 527(e)(1) if such section applied to such years shall not be required to make a return if such organization would not be required to make a return under paragraph (a)(1) of this section.

(b) *Form of return.* The return required by an organization or fund upon which a tax is imposed by section 527(b) shall be made on Form 1120–POL.

[T.D. 7516, 42 FR 57312, Nov. 2, 1977; 43 FR 2721, Jan. 19, 1978]

§ 1.6013–1 Joint returns.

(a) *In general.* (1) A husband and wife may elect to make a joint return under section 6013(a) even though one of the spouses has no gross income or deductions. For rules for determining whether individuals occupy the status of husband and wife for purposes of filing a joint return, see paragraph (a) of §1.6013–4. For any taxable year with respect to which a joint return has been filed, separate returns shall not be made by the spouses after the time for filing the return of either has expired. See, however, paragraph (d)(5) of this section for the right of an executor to

file a late separate return for a deceased spouse and thereby disaffirm a timely joint return made by the surviving spouse.

(2) A joint return of a husband and wife (if not made by an agent of one or both spouses) shall be signed by both spouses. The provisions of paragraph (a)(5) of §1.6012–1, relating to returns made by agents, shall apply where one spouse signs a return as agent for the other, or where a third party signs a return as agent for one or both spouses.

(b) *Nonresident alien.* A joint return shall not be made if either the husband or wife at any time during the taxable year is a nonresident alien, unless an election is in effect for the taxable year under section 6013 (g) or (h) and the regulations thereunder.

(c) *Different taxable years.* Except as otherwise provided in this section, a husband and wife shall not file a joint return if they have different taxable years.

(d) *Joint return after death.* (1) Section 6013(a)(2) provides that a joint return may be made for the survivor and the deceased spouse or for both deceased spouses if the taxable years of such spouses begin on the same day and end on different days only because of the death of either or both. Thus, if a husband and wife make this return on a calendar year basis, and the wife dies on August 1, 1956, a joint return may be made with respect to the calendar year 1956 of the husband and the taxable year of the wife beginning on January 1, 1956, and ending with her death on August 1, 1956. Similarly, if husband and wife both make their returns on the basis of a fiscal year beginning on July 1 and the wife dies on October 1, 1956, a joint return may be made with respect to the fiscal year of the husband beginning on July 1, 1956, and ending on June 30, 1957, and with respect to the taxable year of the wife beginning on July 1, 1956, and ending with her death on October 1, 1956.

(2) The provision allowing a joint return to be made for the taxable year in which the death of either or both spouses occurs is subject to two limitations. The first limitation is that if the surviving spouse remarries before the close of his taxable year, he shall not make a joint return with the first spouse who died during the taxable year. In such a case, however, the surviving spouse may make a joint return with his new spouse provided the other requirements with respect to the filing of a joint return are met. The second limitation is that the surviving spouse shall not make a joint return with the deceased spouse if the taxable year of either spouse is a fractional part of a year under section 443(a)(1) resulting from a change of accounting period. For example, if a husband and wife make their returns on the calendar year basis and the wife dies on March 1, 1956, and thereafter the husband receives permission to change his annual accounting period to a fiscal year beginning July 1, 1956, no joint return shall be made for the short taxable year ending June 30, 1956. Similarly, if a husband and wife who make their returns on a calendar year basis receive permission to change to a fiscal year beginning July 1, 1956, and the wife dies on June 1, 1956, no joint return shall be made for the short taxable year ending June 30, 1956.

(3) Section 6013(a)(3) provides for the method of making a joint return in the case of the death of one spouse or both spouses. The general rule is that, in the case of the death of one spouse, or of both spouses, the joint return with respect to the decedent may be made only by his executor or administrator, as defined in paragraph (c) of §1.6013–4. An exception is made to this general rule whereby, in the case of the death of one spouse, the joint return may be made by the surviving spouse with respect to both him and the decedent if all the following conditions exist:

(i) No return has been made by the decedent for the taxable year in respect of which the joint return is made;

(ii) No executor or administrator has been appointed at or before the time of making such joint return; and

(iii) No executor or administrator is appointed before the last day prescribed by law for filing the return of the surviving spouse.

These conditions are to be applied with respect to the return for each of the taxable years of the decedent for which a joint return may be made if more than one such taxable year is involved. Thus, in the case of husband and wife

on the calendar year basis, if the wife dies in February 1957, a joint return for the husband and wife for 1956 may be made if the conditions set forth in this subparagraph are satisfied with respect to such return. A joint return also may be made by the survivor for both himself and the deceased spouse for the calendar year 1957 if it is separately determined that the conditions set forth in this subparagraph are satisfied with respect to the return for such year. If, however, the deceased spouse should, prior to her death, make a return for 1956, the surviving spouse may not thereafter make a joint return for himself and the deceased spouse for 1956.

(4) If an executor or administrator is appointed at or before the time of making the joint return or before the last day prescribed by law for filing the return of the surviving spouse, the surviving spouse cannot make a joint return for himself and the deceased spouse whether or not a separate return for the deceased spouse is made by such executor or administrator. In such a case, any return made solely by the surviving spouse shall be treated as his separate return. The joint return, if one is to be made, must be made by both the surviving spouse and the executor or administrator. In determining whether an executor or administrator is appointed before the last day prescribed by law for filing the return of the surviving spouse, an extension of time for making the return is included.

(5) If the surviving spouse makes the joint return provided for in subparagraph (3) of this paragraph and thereafter an executor or administrator of the decedent is appointed, the executor or administrator may disaffirm such joint return. This disaffirmance, in order to be effective, must be made within one year after the last day prescribed by law for filing the return of the surviving spouse (including any extension of time for filing such return) and must be made in the form of a separate return for the taxable year of the decedent with respect to which the joint return was made. In the event of such proper disaffirmance the return made by the survivor shall constitute his separate return, that is, the joint return made by him shall be treated as his return and the tax thereon shall be computed by excluding all items properly includible in the return of the deceased spouse. The separate return made by the executor or administrator shall constitute the return of the deceased spouse for the taxable year.

(6) The time allowed the executor or administrator to disaffirm the joint return by the making of a separate return does not establish a new due date for the return of the deceased spouse. Accordingly, the provisions of sections 6651 and 6601, relating to delinquent returns and delinquency in payment of tax, are applicable to such return made by the executor in disaffirmance of the joint return.

(e) *Return of surviving spouse treated as joint return.* For provisions relating to the treatment of the return of a surviving spouse as a joint return for each of the next two taxable years following the year of the death of the spouse, see section 2 and § 1.2–2.

[T.D. 6500, 25 FR 12108, Nov. 26, 1960, as amended by T.D. 7274, 38 FR 11345, May 7, 1973; T.D. 7670, 45 FR 6929, Jan. 31, 1980]

§ 1.6013–2 Joint return after filing separate return.

(a) *In general.* (1) Where an individual has filed a separate return for a taxable year for which a joint return could have been made by him and his spouse under section 6013(a), and the time prescribed by law for filing the return for such taxable year has expired, such individual and his spouse may, under conditions hereinafter set forth, make a joint return for such taxable year. The joint return filed pursuant to section 6013(b) shall constitute the return of the husband and wife for such year, and all payments, credits, refunds, or other repayments, made or allowed with respect to the separate return of either spouse are to be taken into account in determining the extent to which the tax based on the joint return has been paid.

(2) If a joint return is made under section 6013(b), any election, other than the election to file a separate return, made by either spouse in his separate return for the taxable year with respect to the treatment of any income, deduction, or credit of such spouse shall not be changed in the

making of the joint return where such election would have been irrevocable if the joint return had not been made. Thus, if one spouse has made an irrevocable election to adopt and use the last-in, first-out inventory method under section 472, this election may not be changed upon making the joint return under section 6013(b).

(3) A joint return made under section 6013(b) after the death of either spouse shall, with respect to the decedent, be made only by his executor or administrator. Thus, where no executor or administrator has been appointed, a joint return cannot be made under section 6013(b).

(4) A nonresidential alien treated as a resident under section 6013 (g) or (h) for any taxable year ending on or after December 31, 1975, and the alien's U.S. citizen or resident spouse may file a joint return for that taxable year, even though one or both of the spouses have previously filed separate returns for that taxable year. In this case, the rule in paragraph (a)(3) of this section does not apply.

(b) *Limitations with respect to making of election.* A joint return shall not be made under section 6013(b)(1) with respect to a taxable year:

(1) Beginning on or before July 30, 1996, unless there is paid in full at or before the time of the filing of the joint return the amount shown as tax upon such joint return; or

(2) After the expiration of three years from the last day prescribed by law for filing the return for such taxable year determined without regard to any extension of time granted to either spouse; or

(3) After there has been mailed to either spouse, with respect to such taxable year, a notice of deficiency under section 6212, if the spouse, as to such notice, files a petition with the Tax Court of the United States within the time prescribed in section 6213; or

(4) After either spouse has commenced a suit in any court for the recovery of any part of the tax for such taxable year; or

(5) After either spouse has entered into a closing agreement under section 7121 with respect to such taxable year, or after any civil or criminal case arising against either spouse with respect to such taxable year has been compromised under section 7122.

(c) *When return deemed filed; assessment and collection; credit or refund.* (1) For the purpose of section 6501, relating to the period of limitations upon assessment and collection, and section 6651, relating to delinquent returns, a joint return made under section 6013(b) shall be deemed to have been filed, giving due regard to any extension of time granted to either spouse, on the following date:

(i) Where both spouses filed separate returns, prior to making the joint return under section 6013(b), on the date the last separate return of either spouse was filed for the taxable year, but not earlier than the last date prescribed by law for the filing of the return of either spouse;

(ii) Where only one spouse was required and did file a return prior to the making of the joint return under section 6013(b), on the date of the filing of the separate return, but not earlier than the last day prescribed by law for the filing of such return; or

(iii) Where both spouses were required to file a return, but only one spouse did so file, on the date of the filing of the joint return under section 6013(b).

(2) For the purpose of section 6511, relating to refunds and credits, a joint return made under section 6013(b) shall be deemed to have been filed on the last date prescribed by law for filing the return for such taxable year, determined without regard to any extension of time granted to either spouse for filing the return or paying the tax.

(d) *Additional time for assessment.* In the case of a joint return made under section 6013(b), the period of limitations provided in sections 6501 and 6502 shall not be less than one year after the date of the actual filing of such joint return. The expiration of the one year is to be determined without regard to the rules provided in paragraph (c)(1) of this section, relating to the application of sections 6501 and 6651 with respect to a joint return made under section 6013(b).

(e) *Additions to the tax and penalties.* (1) Where the amount shown as the tax by the husband and wife on a joint return made under section 6013(b) exceeds

the aggregate of the amounts shown as tax on the separate return of each spouse, and such excess is attributable to negligence, intentional disregard of rules and regulations, or fraud at the time of the making of such separate return, there shall be assessed, collected, and paid in the same manner as if it were a deficiency an additional amount as provided by the following:

(i) If any part of such excess is attributable to negligence, or intentional disregard of rules and regulations, at the time of the making of such separate return, but without any intent to defraud, this additional amount shall be 5 percent of the total amount of the excess.

(ii) If any part of such excess is attributable to fraud with intent to evade tax at the time of the making of such separate return, this additional amount shall be 50 percent of the total amount of the excess. The latter addition is in lieu of the 50 percent addition to the tax provided in section 6653(b).

(2) For purposes of section 7206 (1) and (2) and section 7207 (relating to criminal penalties in the case of fraudulent returns), the term ''return'' includes a separate return filed by a spouse with respect to a taxable year for which a joint return is made under section 6013(b) after the filing of a separate return.

[T.D. 6500, 25 FR 12108, Nov. 26, 1960, as amended by T.D. 7670, 45 FR 6929, Jan. 31, 1980; T.D. 8725, 62 FR 39117, July 22, 1997]

§ 1.6013–3 Treatment of joint return after death of either spouse.

For purposes of section 21 (relating to change in rates during a taxable year), section 443 (relating to returns for a period of less than 12 months), and section 7851(a)(1)(A) (relating to the applicability of certain provisions of the Internal Revenue Code of 1954 and the Internal Revenue Code of 1939), where the husband and wife have different taxable years because of death of either spouse, the joint return shall be treated as if the taxable years of both ended on the date of the closing of the surviving spouse's taxable year. Thus, in cases where the Internal Revenue Code of 1939 otherwise would apply to the taxable year of the decedent spouse and the Internal Revenue Code of 1954 would apply to the taxable year of the surviving spouse, this provision makes the Internal Revenue Code of 1954 applicable to the taxable years of both spouses if a joint return is filed.

§ 1.6013–4 Applicable rules.

(a) *Status as husband and wife.* For the purpose of filing a joint return under section 6013, the status as husband and wife of two individuals having taxable years beginning on the same day shall be determined:

(1) If the taxable year of each individual is the same, as of the close of such year; and

(2) If the close of the taxable year is different by reason of the death of one spouse, as of the time of such death.

An individual legally separated from his spouse under a decree of divorce or of separate maintenance shall not be considered as married. However, the mere fact that spouses have not lived together during the course of the taxable year shall not prohibit them from making a joint return. A husband and wife who are separated under an interlocutory decree of divorce retain the relationship of husband and wife until the decree becomes final. The fact that the taxpayer and his spouse are divorced or legally separated at any time after the close of the taxable year shall not deprive them of their right to file a joint return for such taxable year under section 6013.

(b) *Computation of income, deductions, and tax.* If a joint return is made, the gross income and adjusted gross income of husband and wife on the joint return are computed in an aggregate amount and the deductions allowed and the taxable income are likewise computed on an aggregate basis. Deductions limited to a percentage of the adjusted gross income, such as the deduction for charitable, etc., contributions and gifts, under section 170, will be allowed with reference to such aggregate adjusted gross income. A similar rule is applied in the case of the limitation of section 1211(b) on the allowance of losses resulting from the sale or exchange of capital assets (see § 1.1211–1). Although there are two taxpayers on a joint return, there is only one taxable income. The tax on the joint return

shall be computed on the aggregate income and the liability with respect to the tax shall be joint and several. For computation of tax in the case of a joint return, see § 1.2–1. For tax in the case of a joint return of husband and wife electing to pay the optional tax under section 3, see § 1.3–1. For the election not to show on a joint return the amount of tax due in connection therewith, see paragraph (c) of § 1.6014–1 and paragraph (d) of § 1.6014–2. For separate computations of the self-employment tax of each spouse on a joint return, see paragraph (b) of § 1.6017–1.

(c) *Definition of executor or administrator*. For purposes of section 6013 the term ''executor or administrator'' means the person who is actually appointed to such office and not a person who is merely in charge of the property of the decedent.

[T.D. 6500, 25 FR 12108, Nov. 26, 1960, as amended by T.D. 7102, 36 FR 5497, Mar. 24, 1971]

§ 1.6013–5 Spouse relieved of liability in certain cases.

(a) *In general*. A person shall be relieved from liability for any tax, penalties, additions to tax, interest, or other amounts, to the extent that such liability is attributable to an omission from gross income in a taxable year, and:

(1) He filed a joint return with a spouse in such taxable year,

(2) An amount of income which exceeds 25 percent of the amount of gross income which is stated in the return (as determined in a manner provided by section 6501(e)(1)(A) of the Code) and which is attributable to such person's spouse was omitted from the return, and should have been, under chapter 1 of the Code, included in the return,

(3) He establishes that he did not know of, and had no reason to know of such omission, and

(4) It is inequitable to hold the taxpayer liable for the deficiency in tax for such taxable year attributable to such omission.

(b) *Inequitable defined*. Whether it is inequitable to hold a person liable for the deficiency in tax, within the meaning of paragraph (a)(4) of this section, is to be determined on the basis of all the facts and circumstances. In making such a determination a factor to be considered is whether the person seeking relief significantly benefited, directly or indirectly, from the items omitted from gross income. However, normal support is not a significant ''benefit'' for purposes of this determination. Evidence of direct or indirect benefit may consist of transfers of property, including transfers which may be received several years after the year in which the omitted item of income should have been included in gross income. Thus, for example, if a person seeking relief receives from his spouse an inheritance of property or life insurance proceeds which are traceable to items omitted from gross income by his spouse, that person will be considered to have benefited from those items. Other factors which may also be taken into account, if the situation warrants, include the fact that the person seeking relief has been deserted by his spouse or the fact that he has been divorced or separated from such spouse.

(c) *Community property laws*. The determination of the spouse to whom items of gross income (other than gross income from property) are attributable shall be made without regard to any applicable community property laws.

(d) *Omission of income*. Section 6013(e) of the Code shall apply only to income which is properly includible as gross income under chapter 1 of the Code, which was, in fact, omitted from a joint return. Section 6013(e) shall not apply to a tax deficiency resulting from erroneous or fraudulent deductions, claims, or other evasions or avoidances of tax.

(e) *Scope of section*. This section does not apply to any taxable year for which a claim for credit or refund is barred by operation of any law or rule of law.

[T.D. 7320, 39 FR 28279, Aug. 6, 1974]

§ 1.6013–6 Election to treat nonresident alien individual as resident of the United States.

(a) *Election for special treatment*—(1) *In general*. Two individuals who are husband and wife at the close of a taxable year ending on or after December 31, 1975, may make an election under this section for that taxable year if, at the

close of that year, one spouse is a citizen or resident of the United States and the other spouse is a nonresident alien. The effect of the election is that each spouse is treated as a resident of the United States for purposes of chapters 1, 5, and 24 and sections 6012, 6013, 6072, and 6091 of the Code for the entire taxable year. An election made under this section is in effect for the taxable year for which made and for all subsequent years of the husband and wife, except:

(i) Any taxable year for which the election is suspended, as described in paragraph (a)(3) of this section, and

(ii) Any taxable year for which the election is terminated in accordance with paragraph (b) of this section and all subsequent taxable years.

A husband and wife may not make an election if an election previously made under this section by either spouse has been terminated under paragraph (b) of this section.

(2) *Particular rules.* (i) As used in paragraph (a)(3) of this section, the term ''U.S. spouse'' means any married individual who is a citizen or resident of the United States at any time during a taxable year.

(ii) An individual's residence is determined by application of the principles of §§ 301.7701(b)–1 through 301.7701(b)–9 of this chapter relating to what constitutes residence in the United States by an alien individual.

(iii) Whether two individuals are married at the close of a taxable year is determined by application of the rules in § 1.6013–4(a).

(iv) The provisions of section 879 and the regulations thereunder shall not apply for any taxable year for which an election under this section is in effect.

(v) An individual who makes an election under this section may not, for United States income tax purposes, claim under any United States income tax treaty not to be a U.S. resident. The relationship of U.S. income tax treaties and the election under this section is illustrated by the following example.

Example. H, a U.S. citizen, is married to W, a nonresident alien of the United States and a domiciliary of country X. H and W maintain their only permanent home in country X. W receives both U.S. source and country X source interest during the taxable year. The interest is not effectively connected with a permanent establishment or a fixed base in any country. H and W make the section 6013 (g) election. Under article ii (1) of the United States—country X Income Tax Convention interest derived and beneficially owned by a resident of one contracting state is exempt from tax in the other contracting state. Article 4 (1) of the treaty provides that an individual is a resident of a contracting state if subject to tax in that country by reason of the individual's domicile, residence, or citizenship. Under article 4 (1) of the treaty, W is a resident of country X by virtue of her domocile in country X and also of the United States by virtue of the section 6013 (g) election. Article 4 (2) of the treaty provides that if an individual is a resident of both the United States and country X by reason of article 4 (1), the individual shall be deemed to be a resident of the contracting state in which he or she has a permanent home available. Because W's sole permanent home is in country X, under article 4 (2) of the treaty W is treated as a resident of country X for purposes of the treaty. Because W has elected under section 6013(g) to be treated as a U.S. resident (and thus to be taxed on worldwide income), W may not, for U.S. income tax purposes, claim under the treaty not to be a U.S. resident. W, therefore, is subject to U.S. income tax on the interest. For purposes of country X income tax, W is considered a resident of country X under the treaty.

(3) *Suspension of election.* (i) An election made under this section is suspended and is not in effect for a taxable year subsequent to the first taxable year for which made if neither spouse is a U.S. spouse during that subsequent taxable year. Thus, for example, the election is in suspense if both spouses are nonresident aliens for the entire taxable year.

(ii) If either spouse dies during any taxable year for which the election under this section is in effect, other than the first taxable year for which the election is to be in effect, the taxable year shall include, solely for purposes of this paragraph (a)(3), only those days during the taxable year on which both spouses are alive. Thus, for example, if the U.S. spouse dies during the taxable year, the election is not suspended for that year even if the surviving nonresident alien spouse never acquires U.S. citizenship or residency. Similarly, if the nonresident alien spouse dies during the taxable year, the election is not suspended for that year even if the surviving U.S. spouse

subsequently abandons U.S. citizenship or residency. However, if neither spouse was a U.S. spouse at any time during the period of the taxable year when both spouses were alive, the election is suspended for that year even if the surviving spouse subsequently acquires U.S. citizenship or residency.

For the effect of the death of either spouse on the status of the election in subsequent taxable years, see paragraph (b)(2) of this section.

(4) *Time and manner of making an election.* (i) A husband and wife shall make the election under this section by attaching a statement to a joint return for the first taxable year for which the election is to be in effect. The election must be made before the expiration of the period prescribed by section 6511(a) (or section 6511(c) if the period is extended by agreement) for making a claim for credit or refund. If either or both spouses die after the close of the taxable year but before the joint return is filed, the election may be made by the executor, administrator, or other person charged with the property of the deceased spouse. If the election is made with a joint amended return, the amended return should be made on Form 1040 or 1040A, the word ''Amended'' should be written clearly on the front of the return, and an amended return also must be filed for each subsequent taxable year as to which a return previously has been filed by either spouse.

(ii) The statement must contain a declaration that the election is being made and that the requirements of paragraph (a)(1) of this section are met for the taxable year. The statement must also contain the name, address, and taxpayer identifying number of each spouse. If the election is being made on behalf of a deceased spouse, the statement must contain the name and address of the executor, administrator, or other person making the election on behalf of the decreased spouse. The statement must be signed by both persons making the election.

(b) *Termination of election*—(1) *Revocation.* (i) An election under this section shall terminate if either spouse revokes the election. An election that is revoked terminates as of the first taxable year for which the last day prescribed by section 6072(a) and 6081(a) for filing the return of tax has not yet occurred.

(ii) Revocation of the election is made by filing a statement of revocation in the following manner. If the spouse revoking the election is required to file a return under section 6012, the statement is filed by attaching it to the return for the first taxable year to which the revocation applies. If the spouse revoking the election is not required to file a return under section 6012, but files a claim for refund under section 6511, the statement is filed by attaching it to the claim for refund. If the spouse revoking the election is not required to file a return and does not file a claim for refund, the statement is filed by submitting it to the service center director with whom was filed the most recent joint return of the spouses. The revocation may, if the revoking spouse dies after the close of the first taxable year to which the revocation applies but before the return, claim for refund, or statement of revocation is filed, be made by the executor, administrator or other person charged with the property of the deceased spouse.

(iii) A revocation of the election is effective as of a particular taxable year if it is filed on or before the last day prescribed by section 6072(a) and 6081(a) for filing the return of tax for that taxable year. However, the revocation is not final until that last day.

(iv) The statement of revocation must contain a declaration that the election under this section is being revoked. The statement must also contain the name, address, and taxpayer identifying number of each spouse. If the revocation is being made on behalf of a deceased spouse, the statement must contain the name and address of the executor, administrator, or other person revoking the election on behalf of the deceased spouse. The statement must also include a list of the States, foreign countries, and possessions of the United States which have community property laws and in which:

(A) Each spouse is domiciled, or

(B) real property is located from which either of the spouses receives income.

The statement must be signed by the person revoking the election.

(2) *Death*. An election under this section shall terminate if either spouse dies. An election that terminates on account of death terminates as of the first taxable year of the surviving spouse following the taxable year in which the death occurred. However, if the surviving spouse is a citizen or resident of the United States who is entitled to the benefits of section 2, the election terminates as of the first taxable year following the last taxable year for which the surviving spouse is entitled to the benefits of section 2. If both spouses die within the same taxable year, the election terminates as of the first day after the close of the taxable year in which the deaths occurred.

(3) *Legal separation*. An election under this section terminates if the spouses legally separate under a degree of divorce or of separate maintenance. An election that terminates on account of legal separation terminates as of the close of the taxable year preceding the taxable year in which the separation occurs. The rules in §1.6013–4(a) are relevant in determining whether two spouses are legally separated.

(4) *Inadequate records*. An election under this section may be terminated by the Commissioner if it is determined that either spouse has failed to keep adequate records. An election that is terminated on account of inadequate records terminates as of the close of the taxable year preceding the taxable year for which the Commissioner determines that the election should be terminated. Adequate records are the books, records, and other information resonably necessary to ascertain the amount of liability for taxes under chapters 1, 5, and 24 of the code of either spouse for the taxable year. Adequate records also includes the granting of access to the books and records.

(c) *Illustrations*. The application of this section is illustrated by the following examples. In each case the individual's taxable year is the calendar year and the spouses are not legally separated.

Example (1). W, a U.S. citizen for the entire taxable year 1979, is married to H, a nonresident alien individual. W and H may make the section 6013(g) election for 1979 by filing the statement of election with a joint return. If W and H make the election, income from sources within and without the United States received by W and H in 1979 and subsequent years must be included in gross income for each taxable year unless the election later is terminated or suspended. While W and H must file a joint return for 1979, joint or separate returns may be filed for subsequent years.

Example (2). H and W are husband and wife and are both nonresident alien individuals. In June 1980 H becomes a U.S. resident and remains a resident for the balance of the year. H and W may make the section 6013(g) election for 1980. If H and W make the election, income from sources within and without the United States received by H and W for the entire taxable year 1980 and subsequent years must be included in gross income for each taxable year, unless the election later is terminated or suspended.

Example (3) . W, a U.S. resident on December 31, 1981, is married to H, a nonresident alien. W and H make the section 6013(g) election and file joint returns for 1981 and succeeding years. On January 10, 1987, W becomes a nonresident alien. H has remained a nonresident alien. W and H may file a joint return or separate returns for 1987. As neither W or H is a U.S. resident at any time during 1988, their election is suspended for 1988. If W and H have U.S. source or foreign source income effectively connected with the conduct of a U.S. trade or business in 1988, they must file separate returns as nonresident aliens. W becomes a U.S. resident again on January 5, 1990. Their election no longer is in suspense. Income from sources within and without the United States received by W or H in the years their election is not suspended must be included in gross income for each taxable year.

Example (4). H, a U.S. citizen for the entire taxable year 1979, is married to W, who is not a U.S. citizen. While W believes that she is a U.S. resident, H and W make the section 6013(g) election for 1979 to cover the possibility that later it would be determined that she is a nonresident alien during 1979. The election for 1979 will not be considered evidence that W was a nonresident alien in prior years. Income from sources within and without the United States received by H amd W in 1979 and subsequent years must be included in gross income for each taxable year, unless the election later is terminated or suspended.

[T.D. 7670, 45 FR 6929, Jan. 31, 1980, as amended by T.D. 7842, 47 FR 49842, Nov. 3, 1982; T.D. 8411, 57 FR 15241, Apr. 27, 1992]

§ 1.6013–7 Joint return for year in which nonresident alien becomes resident of the United States.

(a) *Election for special treatment*—(1) *In general.* Two individuals who are husband and wife at the close of a taxable year ending on or after December 31, 1975, may make an election under this section for that taxable year if one spouse is a citizen or resident of the United States on the last day of that taxable year and the other spouse is a nonresident alien at the beginning of that taxable year and a citizen or resident of the United States at the close of that taxable year. Two married individuals who are nonresident aliens at the beginning of a taxable year and who are U.S. citizens or residents on the last day of that taxable year qualify for the election. The effect of the election is that each spouse is treated as a resident of the United States for purposes of chapters 1, 5, and 24 and sections 6012, 6013, 6072, and 6091 of the code for all of that taxable year. A husband and wife may not make an election if an election has previously been made under this section by either spouse.

(2) *Particular rules.* The rules in subdivisions (ii) through (v) of § 1.6013–6(a)(2) are applicable to this section.

(3) *Time and manner of making an election.* A husband and wife shall make the election under this section in accordance with the rules in § 1.6013–6(a)(4).

(b) *Section 6013(g) election in effect.* If an election under section 6013(g) is in effect for a year subsequent to the first taxable year for which made and during that subsequent year the husband and wife meet the requirements of section 6013(h) and paragraph (a)(1) of this section, then the election under section 6013(g) shall apply to that subsequent taxable year. A separate election under section 6013(h) is not required for that subsequent taxable year.

[T.D. 7670, 45 FR 6931, Jan. 31, 1980]

§ 1.6014–1 Tax not computed by taxpayer for taxable years beginning before January 1, 1970.

(a) *In general.* If an individual is entitled under paragraph (a)(7) of § 1.6012–1 to use as his return Form 1040A, he may elect not to show thereon the amount of the tax due in connection with such return if his gross income is less than $5,000.

(b) *Computation and payment of tax.* A taxpayer who, in accordance with paragraph (a) of this section, elects not to show the tax on Form 1040A is not required to pay the unpaid balance of such tax at the time he files the return. In such case, the tax will be computed for the taxpayer by the Internal Revenue Service, and a notice will be mailed to the taxpayer stating the amount of tax due. Where it is determined that a refund of tax is due, the Internal Revenue Service will send such refund to the taxpayer. See paragraph (c) of § 301.6402–3 of this chapter (Regulations on Procedure and Administration).

(c) *Joint return.* (1) A husband and wife who, pursuant to paragraph (a)(7) of § 1.6012–1, file a joint return on Form 1040A may elect not to show the tax on such return if their aggregate gross income for the taxable year is less than $5,000.

(2) The tax computed for the taxpayer who files Form 1040A and elects not to show thereon the tax due shall be the lesser of the following amounts:

(i) A tax computed as though the return on Form 1040A constituted the separate returns of the spouses, or

(ii) A tax computed as though the return on Form 1040A constituted a joint return.

(d) *Married individuals filing separate returns.* In the case of a married individual who files a separate return and who elects under this section not to show his tax on Form 1040A his tax shall be computed with reference to the 10-percent standard deduction rather than the minimum standard deduction.

(e) This section shall apply to taxable years beginning before January 1, 1970.

[T.D. 6500, 25 FR 12108, Nov. 26, 1960, as amended by T.D. 6581, 26 FR 11678, Dec. 6, 1961; T.D. 6792, 30 FR 531, Jan. 15, 1965; T.D. 7102, 36 FR 5497, Mar. 24, 1971]

§ 1.6014–2 Tax not computed by taxpayer for taxable years beginning after December 31, 1969.

(a) *In general.* An individual subject to the tax imposed by section 1 of the Code may, in accordance with the instructions applicable to the income tax

return to be filed, elect, for any taxable year beginning after December 31, 1969, not to show on his income tax return for such year the amount of tax due in connection with such return.

(b) *Restriction on making an election.* The election pursuant to this section shall not be made by an individual who does not file his return (or amended return) making such election on or before the date prescribed in section 6072(a) for the filing of the original return (determined without regard to any extension of time).

(c) *Effects of election.* (1) A taxpayer who, in accordance with the provisions of this section, elects not to show the tax on his income tax return is not required to pay the unpaid balance of such tax at the time he files the return. In such case, the tax will be computed for the taxpayer by the Internal Revenue Service, and a notice will be mailed to the taxpayer stating the amount of tax due. Where it is determined that a refund of tax is due, the Internal Revenue Service will send such refund to the taxpayer. See paragraph (c) of §301.6402–3 of this chapter (Regulations on Procedure and Administration). The computation of tax by the Internal Revenue Service shall be treated for purposes of this chapter as if made by the taxpayer, and such computation or the issuance of a notice or refund pursuant thereto shall not relieve the taxpayer of liability for any deficiency (although the deficiency is based upon an amount of tax different from that computed for the taxpayer by the Internal Revenue Service) or affect the rights of the Internal Revenue Service with respect to any subsequent audit or other review of the taxpayer's return.

(2) Where the election provided for in this section is made by a taxpayer who takes the standard deduction and who has adjusted gross income of less than $10,000, such election constitutes an election to pay the tax imposed by section 3.

(3) A taxpayer who makes an election under section 6014 shall not be precluded from claiming:

(i) Status as a head of household or a surviving spouse;

(ii) The credit under section 31 (relating to tax withheld on wages);

(iii) The credit under section 37 (relating to retirement income);

(iv) The credit under section 38 (relating to investment in certain depreciable property);

(v) The credit under section 39 (relating to certain uses of gasoline and lubricating oil);

(vi) The credit under section 41 (relating to contributions to candidates for public office);

(vii) The credit under section 42 (relating to personal exemptions);

(viii) The credit under section 43 (relating to earned income);

(ix) The credit under section 44 (relating to purchase of new principal residence); or

(x) The credit under section 45 (relating to overpayments of tax).

(d) *Joint returns.* (1) A husband and wife who file a joint return may elect not to show the tax on such return in accordance with the rules prescribed in paragraphs (a) and (b) of this section.

(2) The tax computed for a husband and wife who elect pursuant to this section not to show their tax on their joint income tax return shall be the lesser of the following amounts:

(i) A tax computed as though the return of income constituted a joint return, or

(ii) If sufficient information is provided for the taxable income of each spouse to be determined, a tax computed as though the return of income constituted the separate returns of the spouses.

(e) *Married individuals filing separate returns.* This section shall apply to married individuals filing separate returns unless otherwise provided in the instructions accompanying a return. The instructions may require the taxpayer to attach to his return a statement to the effect that his tax and the tax of his spouse were determined in accordance with the rules of sections 141(d) and 142(a).

(f) *Revocation of election.* An election pursuant to this section may be revoked on an amended return (whether such return is filed before or after the date prescribed in section 6072(a) for filing the original return).

[T.D. 7102, 36 FR 5497, Mar. 24, 1971, as amended by T.D. 7298, 38 FR 35234, Dec. 26, 1973; T.D. 7391, 40 FR 55856, Dec. 2, 1975]

§ 1.6015(a)–1 Declaration of estimated income tax by individuals.

(a) *Requirement*—(1) *Taxable years beginning after December 31, 1971.* With respect to taxable years beginning after December 31, 1971, a declaration of estimated income tax by an individual is not required if the estimated tax (as defined in section 6015(c)) can reasonably be expected to be less than $100. In all other cases a declaration of estimated income tax shall be made by every individual if the following conditions are met and if such individual is not a nonresident alien individual who is excepted under section 6015(i) and § 1.6015(i)–1 from the requirements of making a declaration:

(i) The gross income for the taxable year can reasonably be expected to exceed:

(a) $20,000, in the case of:

(1) A single individual including a head of a household (as defined in section 2(b)) or a surviving spouse (as defined in section 2(a)); or

(2) A married individual entitled under section 6015(b) to file a joint declaration with his spouse, if his spouse has not received wages (as defined in section 3401(a)) for the taxable year; or

(b) $10,000, in the case of a married individual entitled under section 6015(b) to file a joint declaration with his spouse, if both he and his spouse have received wages (as defined in section 3401(a)) for the taxable year; or

(c) $5,000, in the case of a married individual not entitled under section 6015(b) to file a joint declaration with his spouse; or

(ii) The gross income can reasonably be expected to include more than $500 from sources other than wages (as defined in section 3401(a)).

(2) *Taxable years beginning after December 31, 1966, and before January 1, 1972.* With respect to taxable years beginning after December 31, 1966, and before January 1, 1972, a declaration of estimated income tax by an individual is not required if the estimated tax (as defined in section 6015(c)) can reasonably be expected to be less than $40. In all other cases a declaration of estimated income tax shall be made by every individual if the following conditions are met and if such individual is not a nonresident alien individual who is excepted under section 6015(i) and § 1.6015(i)–1 from the requirement of making a declaration:

(i) The gross income for the taxable year can reasonably be expected to exceed:

(a) $5,000, in the case of:

(1) A single individual other than a head of a household (as defined in section 1(b)(2) for taxable years ending before January 1, 1971, or as defined in section 2(b) of the Code as amended by the Tax Reform Act of 1969 for taxable years beginning after December 31, 1970) or a surviving spouse (as defined in section 2(b) for taxable years ending before January 1, 1971, or as defined in section 2(a) of the Code as amended by the Tax Reform Act of 1969 for taxable years beginning after December 31, 1970);

(2) A married individual not entitled under section 6015(b) to file a joint declaration with his spouse; or

(3) A married individual entitled under section 6015(b) to file a joint declaration with his spouse, but only if the aggregate gross income of such individual and his spouse for the taxable year can reasonably be expected to exceed $10,000; or

(b) $10,000, in the case of:

(1) A head of household (as defined in section 1(b)(2) for taxable years ending before January 1, 1971, or as defined in section 2(b) of the Code as amended by the Tax Reform Act of 1969 for taxable years beginning after December 31, 1970); or

(2) A surviving spouse (as defined in section 2(b) for taxable years ending before January 1, 1971, or as defined in section 2(a) of the Code as amended by the Tax Reform Act of 1969 for taxable years beginning after December 31, 1970); or

(ii) The gross income can reasonably be expected to include more than $200 from sources other than wages (as defined in section 3401(a)).

(3) *Taxable years beginning before January 1, 1967.* With respect to taxable years beginning before January 1, 1967, and after December 31, 1960, a declaration of estimated income tax by an individual is not required if the estimated tax (as defined in section 6015(c)) can reasonably be expected to be less

than $40. In all other cases a declaration shall be made by every citizen of the United States, whether residing at home or abroad, every individual residing in the United States though not a citizen thereof, every nonresident alien who is a resident of Canada, Mexico, or Puerto Rico and who has wages subject to withholding at the source under section 3402, and every nonresident alien who has been, or expects to be, a resident of Puerto Rico during the entire taxable year, if:

(i) The gross income for the taxable year can reasonably be expected to exceed:

(a) $5,000, in the case of:

(1) A single individual other than a head of a household (as defined in section 1(b)(2)); or

(2) A married individual not entitled under section 6015(b) to file a joint declaration with his spouse; or

(3) A married individual entitled under section 6015(b) to file a joint declaration with his spouse, but only if the aggregate gross income of such individual and his spouse for the taxable year can reasonably be expected to exceed $10,000; or

(b) $10,000, in the case of:

(1) A head of a household (as defined in section 1(b)(2)); or

(2) A surviving spouse (as defined in section 2(b)); or

(ii) The gross income can reasonably be expected to include more than $200 from sources other than wages (as defined in section 3401(a)).

(b) *Income of child*. In estimating his gross income for the taxable year a parent should not take into account the income of his minor child. Such income is not includible in the gross income of the parent. See section 73 and § 1.73–1.

(c) *Exemption of spouse*. For the purpose of determining whether a declaration of estimated tax is required under the provisions of paragraph (a)(3) of this section, a married person filing a separate declaration may not take into account the exemption of his spouse, if his spouse has, or is reasonably expected to have, gross income, or is reasonably expected to be the dependent of another taxpayer for the taxable year.

(d) *Nonresident alien individuals*. For the rules exempting certain nonresident alien individuals from the requirement of making a declaration of estimated income tax, see § 1.6015(i)–1.

(e) *Examples*. The application of the provisions of this section may be illustrated by the following examples:

Example (1). H maintains as his home a household which is the principal place of abode of himself and his two dependent children. H's wife died in 1970 and he has not remarried. H and his wife filed a joint return for 1970. H's salary from January 1, to June 30, 1972, is at the annual rate of $18,000. However, effective July 1, 1972, his annual salary is increased to $24,000, and under the facts then existing it is reasonable to assume that his salary for the remaining portion of 1972 will remain unchanged and that his total salary for the year will, therefore, be $21,000. Since H is a surviving spouse (as defined in section 2(a)) and his gross income can reasonably be expected to exceed $20,000, he is required to file a declaration of estimated tax for 1972. Since it was not reasonable to assume that H's gross income for 1972 would exceed $20,000 until July 1972 (after June 1 and before September 2), H is not required to file a declaration until September 15, 1972. However, if H's estimated tax (as defined in section 6015(c)) can reasonably be expected to be less than $100, he is not required to file a declaration of estimated tax. See section 6073 and §§ 1.6073–1 to 1.6073–4, inclusive, for rules as to when a declaration must be filed.

Example (2). H, a taxpayer making his return on the calendar year basis, has an annual salary of $12,000 in 1972. W, H's wife, received wages (as defined in section 3401(a)) in December 1972. W did not receive wages prior to December. Assuming that H and W are entitled to file a joint declaration of estimated tax under section 6015(b), H would not be required to file a declaration for 1972 until January 15, 1973, since prior to December 1972 W had not received wages. Since W received wages after September 1, 1972, H must file a declaration on or before January 15, 1973, because, under the rule contained in paragraph (a)(1)(i)*(b)* of this section, H's gross income could reasonably be expected to exceed $10,000 for 1972. However, no declaration would be required if H's estimated tax (as defined in section 6015(c)) could reasonably be expected to be less than $100. No declaration is required prior to January 15, 1973, because, under the rule contained in paragraph (a)(1)(i)*(a)*(2) of this section, H's gross income for 1972 could not reasonably be expected to exceed $20,000.

Example (3). P is a taxpayer making his return on the calendar year basis. P is engaged in the practice of his profession on his own account and has gross income of $2,000 from

such profession for the 2 months of January and February 1972. He reasonably expects that his gross income from his profession will continue to average $1,000 each month throughout the year and that he will have no income from any other source during 1972. Since P has gross income which does not constitute wages subject to withholding, he is required to file a declaration of estimated tax for that year since he has income of more than $500 from sources other than wages, unless he reasonably expects his estimated tax to be less than $100.

Example (4). S, a married taxpayer, has been regularly employed for many years. As of January 1, 1972, his weekly wages are $305. For many years, S has also owned stock in a corporation which has regularly paid him annual dividends ranging from $575 to $600. Because his gross income can reasonably be expected to include more than $500 from sources other than wages, S is required to make a declaration of estimated tax for 1972, unless he reasonably expects his estimated tax to be less than $100.

(f) *Declarations made by agents.* The declaration of income may be made by an agent if, by reason of disease or injury, the person liable for the making of the declaration is unable to make it. The declaration may also be made by an agent if the taxpayer is unable to make the declaration by reason of continuous absence from the United States (including Puerto Rico as if a part of the United States) for a period of at least 60 days prior to the date prescribed by law for making the declaration. In addition, a declaration may be made by an agent if the taxpayer requests permission, in writing, of the district director for the internal revenue district in which is located the legal residence or principal place of business of the person liable for the making of the declaration, and such district director determines that good cause exists for permitting the declaration to be so made. However, assistance in the preparation of the declaration may be rendered under any circumstances. Whenever a declaration is made by an agent it must be accompanied by a power of attorney (or copy thereof) authorizing him to represent his principal in making, executing, or filing the declaration. A form 2848, when properly completed, is sufficient. In addition, where one spouse is physically unable by reason of disease or injury to sign a joint declaration, the other spouse may, with the oral consent of the one who is incapacitated, sign the incapacitated spouse's name in the proper place in the declaration followed by the words ''By _____, Husband (or Wife)'', and by the signature of the signing spouse in his own right, provided that a dated statement signed by the spouse who is signing the declaration is attached to and made a part of the declaration stating:

(1) The name of the declaration being filed,

(2) The taxable year,

(3) The reason for the inability of the spouse who is incapacitated to sign the declaration, and

(4) That the spouse who is incapacitated consented to the signing of the declaration.

The taxpayer and his agent, if any, are responsible for the declaration as made and incur liability for the penalties provided for erroneous, false, or fraudulent declarations.

[T.D. 6500, 25 FR 12108, Nov. 26, 1960, as amended by T.D. 6817, 30 FR 4537, Apr. 8, 1965; T.D. 7117, 36 FR 9422, May 25, 1971; T.D. 7274, 38 FR 11345, May 7, 1973; T.D. 7282, 38 FR 19027, July 17, 1973; T.D. 7332, 39 FR 44232, Dec. 23, 1974]

§ 1.6015(b)–1 Joint declaration by husband and wife.

(a) *In general.* A husband and wife may make a joint declaration of estimated tax even though they are not living together. However, a joint declaration may not be made if they are separated under a decree of divorce or of separate maintenance. A joint declaration may not be made if the taxpayer's spouse is a nonresident alien (including a nonresident alien who is a bona fide resident of Puerto Rico during the entire taxable year) or if his spouse has a different taxable year. If the gross income of each spouse meets the requirements of section 6015(a), either a joint declaration must be made or a separate declaration must be made by each. If a joint declaration is made, the amount estimated as the income tax imposed by chapter 1 (other than by section 56) must be computed on the aggregate estimated taxable income of the spouses (see section 6013(d)(3) and § 1.2–1), while (for taxable years beginning after December 31, 1966) the

amount estimated as the self-employment tax imposed by chapter 2 must be computed on the separate estimated self-employment income of each spouse. See sections 1401 and 1402 and § 1.6017–1(b)(1). The liability with respect to the estimated tax, in the case of a joint declaration, shall be joint and several.

(b) *Application to separate returns.* The fact that a joint declaration of estimated tax is made by them will not preclude a husband and his wife from filing separate returns. In case a joint declaration is made but a joint return is not made for the same taxable year, the payments made on account of the estimated tax for such year may be treated as payments on account of the tax liability of either the husband or wife for the taxable year or may be divided between them in such manner as they may agree. In the event the husband and wife fail to agree to a division, such payments shall be allocated between them in accordance with the following rule. The portion of such payments to be allocated to a spouse shall be that portion of the aggregate of all such payments as the amount of tax imposed by chapter 1 (other than by section 56) shown on the separate return of the taxpayer (plus, for taxable years beginning after December 31, 1966, the amount of tax imposed by chapter 2 shown on the return of the taxpayer) bears to the sum of the taxes imposed by chapter 1 (other than by section 56) shown on the separate returns of the taxpayer and his spouse (plus, for taxable years beginning after December 31, 1966, the sum of the taxes imposed by chapter 2 shown on the returns of the taxpayer and his spouse). For example, assume that for calendar yedar 1972 H and his Spouse W make a joint declaration of estimated tax and, pursuant thereto, pay a total of $19,500 of estimated tax. H and W subsequenty file separate returns for 1972 showing tax imposed by chapter 1 (other than by section 56) in the amount of $11,500 and $8,000, respectively. In addition, H's return shows a tax imposed by chapter 2 in the amount of $500. H and W fail to agree to a division of the estimated tax paid. The amount of the aggregate estimated tax payments allocated to H is computed as follows:

(1) Amount of tax, imposed by chapter 1 (other than by section 56) shown on H's return	$11,500
(2) Plus: Amount of tax imposed by chapter 2 shown on H's return	500
(3) Total taxes imposed by chapter 1 (other than by section 56) and by chapter 2 shown on H's return	12,000
(4) Amount of tax imposed by chapter 1 (other than by section 56) shown on W's return	$8,000
(5) Total taxes imposed by chapter 1 (other than by section 56) and by chapter 2 shown on both H's and W's returns	20,000
(6) Proportion of such taxes shown on H's return to total amount of such taxes shown on both H's and W's returns ($12,000÷20,000)	60%
(7) Amount of estimated tax payments allocated to H (60% of $10,500)	$11,700

Accordingly, H's return would show remaining tax liability in the amount of $300 ($12,000 taxes shown less $11,700 estimated tax allocated).

(c) *Death of spouse.* (1) A joint declaration may not be made after the death of either the husband or wife. However, if it is reasonable for a surviving spouse to assume that there will be filed a joint return for himself and the deceased spouse for his taxable year and the last taxable year of the deceased spouse he may, in making a separate declaration for his taxable year which includes the period comprising such last taxable year of his spouse, estimate the amount of the tax imposed by chapter 1 (other than by section 56) on his and his spouse's taxable income on an aggregate basis and compute his estimated tax with respect to such chapter 1 tax in the same manner as though a joint declaration had been filed.

(2) If a joint declaration is made by husband and wife and thereafter one spouse dies, no further payments of estimated tax on account of such joint declaration are required from the estate of the decedent. The surviving spouse, however, shall be liable for the payment of any subsequent installments of the joint estimated tax unless an amended declaration setting forth the separate estimated tax for the taxable year is made by such spouse. Such separate estimated tax shall be paid at the times and in the amounts determined under the rules prescribed in section 6153. For the purpose of (i) the making of such amended declaration by the surviving spouse, and (ii) the allocation of payments made pursuant to

a joint declaration between the surviving spouse and the legal representative of the decedent in the event a joint return is not filed, the payments made pursuant to the joint declaration may be divided between the decedent and the surviving spouse in such proportion as the surviving spouse and the legal representative of the decedent may agree. In the event the surviving spouse and the legal representative of the decedent fail to agree to a division, such payments shall be allocated in accordance with the following rule. The portion of such payments to be allocated to the surviving spouse shall be that portion of the aggregate amount of such payments as the amount of tax imposed by chapter 1 (other than by section 56) shown on the separate return of the surviving spouse (plus, for taxable years beginning after December 31, 1966, the amount of tax imposed by chapter 2 shown on the return of the surviving spouse) bears to the sum imposed by chapter 1 (other than by section 56) shown on the separate returns of the surviving spouse and of the decedent (plus, for taxable years beginning after December 31, 1966, the sum of the taxes imposed by chapter 2 shown on the returns of the surviving spouse and of the decedent); and the balance of such payments shall be allocated to the decedent. This rule may be illustrated by analogizing the surviving spouse described in this rule to H in the example contained in paragraph (b) of this section and the decedent in this rule to W in that example.

(d) *Signing of declaration*. A joint declaration of a husband and wife (if not made by an agent of one or both spouses) shall be signed by both spouses. The provisions of paragraph (f) of § 1.6015(a)–1, relating to returns made by agents, shall apply where one spouse signs a declaration as agent for the other, or where a third party signs a declaration as agent for one or both spouses.

[T.D. 6500, 25 FR 12108, Nov. 26, 1960, as amended by T. D. 7274, 38 FR 11345, May 7, 1973; T.D. 7427, 41 FR 34027, Aug. 12, 1976]

§ 1.6015(c)–1 Definition of estimated tax.

(a) *In general*. In the case of an individual, the term ''estimated tax'' means:

(1) The amount which the individual estimates as the amount of the income tax imposed by chapter 1 (other than the tax imposed by section 56 or for taxable years ending before September 30, 1968, the tax surcharge imposed by section 51) for the taxable year (and including the amount which he estimates as the amount of any qualified State individual income taxes which are treated pursuant to section 6361(a) as if they were imposed by chapter 1 for the taxable year), plus

(2) For taxable years beginning after December 31, 1966, the amount which the individual estimates as the amount of the self-employment tax imposed by chapter 2 for the taxable year, minus

(3) The amount which the individual estimates as the sum of any credits against tax provided by part IV of subchapter A of chapter 1. These credits are those provided by section 31 (relating to tax withheld on wages), section 32 (relating to tax withheld at source on nonresident aliens and foreign corporations and on tax-free covenant bonds), section 33 (relating to foreign taxes), section 34 (relating to the credit for dividends received on or before December 31, 1964), section 35 (relating to partially tax-exempt interest), section 37 (relating to the elderly), section 38 (relating to the investment credit), section 39 (relating to certain uses of gasoline, special fuels, and lubricating oil), section 40 (relating to expenses of work incentive programs), section 41 (relating to contributions to candidates), section 42 (relating to general tax credit), section 43 (relating to earned income), section 44 (relating to purchase of new principal residence), section 44A (relating to expenses for household and dependent care services necessary for gainful employment), section 44B (relating to credit for employment of certain new employees), and section 45 (relating to overpayments of tax), minus,

(4) In the case of an individual who is subject to one or more qualified State

individual income taxes, the amount which he estimates as the sum of the credits allowed against such taxes pursuant to section 6362(b)(2) (B) or (C) or section 6362(c)(4) and paragraph (c) of § 301.6362–4 of this chapter (Regulations on Procedure and Administration) (relating to the credit for income taxes of other States or political subdivisions thereof) and paragraph (c)(2) of § 301.6361–1 (relating to the credit for tax withheld from wages on account of qualified State individual income taxes), and minus

(5) For taxable years ending after February 29, 1980, the amount which the individual estimates will be the amount of such individual's overpayment of windfall profit tax imposed by section 4986 of the Code for the taxable year. For this purpose, the amount of such overpayment is the amount by which such individual's aggregate windfall profit tax liability for the taxable year as a producer of crude oil is reasonably expected to be exceeded by withholding of windfall profit tax for the taxable year.

(b) *Example*. A, a self-employed individual not subject to any qualified State individual income tax, estimates that his liabilities for income tax and self-employment tax for 1973 will be $1,600 and $400, respectively. A is required to declare and pay an estimated tax of $2,000 for that year.

(Secs. 6015, 6154, 6654, 6655, and 7805, Internal Revenue Code of 1954 (96 Stat. 2395 and 2396, 68A Stat. 917; 26 U.S.C. 6015, 6154, 6654, 6655, and 7805))

[T.D. 7577, 43 FR 59358, Dec. 20, 1978, as amended by T.D. 8016, 50 FR 11854, Mar. 26, 1985]

§ 1.6015(d)–1 Contents of declaration of estimated tax.

(a) *In general*. (1) The declaration of estimated tax by an individual shall be made on Form 1040–ES. For the purpose of making the declaration, the amount of gross income which the taxpayer can reasonably be expected to receive or accrue, depending upon the method of accounting upon which taxable income is computed, and the amount of the estimated allowable deductions and credits to be taken into account in computing the amount of estimated tax shall be determined upon the basis of the facts and circumstances existing as at the time prescribed for the filing of the declaration as well as those reasonably to be anticipated for the taxable year. If, therefore, the taxpayer is employed at the date prescribed for filing his declaration at a given wage or salary, it should, in the absence of circumstances indicating the contrary, be presumed by him for the purpose of the declaration that such employment will continue to the end of the taxable year at the wage or salary received by him as of such date. In the case of income other than wages and salary the regularity in the payment of income, such as dividends, interest, rents, royalties, and income arising from estates and trusts is a factor to be taken into consideration. Thus, if the taxpayer owns shares of stock in a corporation and dividends have been paid regularly for several years upon such stock, the taxpayer in the preparation of his declaration should, in the absence of information indicating a change in the dividend policy, include the prospective dividends from the corporation for the taxable year as well as those actually received in such year prior to the filing of the declaration. In the case of a taxpayer engaged in business on his own account, there shall be made an estimate of gross income and deductions and credits in the light of the best available information affecting the trade, business, or profession.

(2) In the case of any individual who can, at the time of the preparation of his declaration, reasonably anticipate that his gross income will be of such amount and character as to enable him to elect upon his return for such year to compute the tax under section 3 (relating to optional tax), in lieu of the tax imposed by section 1, the declaration of estimated tax may be made upon the basis set forth in section 3 and § 1.3–1. The filing of a declaration computed upon the basis of section 3 shall not constitute the making of an election under section 4 (relating to rules for optional tax) nor will it permit the filing of a return on the basis of the optional tax under section 3 unless the taxpayer otherwise comes within the provisions of sections 3 and 4. For the purpose of computing the tax

liability in the case of married persons, if the taxable income of one spouse is determined without regard to the standard deduction, the standard deduction is not allowed to either. (See, however, paragraph (c) of §1.142–1 for exceptions where spouses are legally separated under a decree of divorce or separate maintenance.) Hence, where separate declarations are filed, one spouse should not use section 3 in computing the estimated tax unless the other spouse also uses section 3 or employs the standard deduction in computing the estimated tax.

(b) *Computation of estimated tax.* In computing the estimated tax the taxpayer should take into account the following:

(1) The amount estimated as the income tax imposed by chapter 1 (other than by section 56) for the taxable year after the application of any allowable amounts estimated as the credit for foreign taxes, the dividends received credit (for dividends received on or before December 31, 1964), the credit for partially tax-exempt interest, the retirement income credit, the investment credit, the credit for expenses of work incentive programs, the credit for contributions to candidates, the credit for overpayments of tax, but without regard to the credit under section 31 for tax withheld on wages or to the credit under section 39 for certain uses of gasoline, special fuels, and lubricating oils;

(2) For taxable years beginning after December 31, 1966 (and, if the taxpayer so desires, for an earlier taxable year), the amount estimated as the tax on self-employment income imposed by chapter 2;

(3) The amounts estimated by the taxpayer as the credits under section 31 for tax withheld on wages and under section 39 for certain uses of gasoline, special fuels, and lubricating oils;

(4) For taxable years ending after February 29, 1980, the amount which the taxpayer estimates will be the amount of such taxpayer's overpayment of windfall profit tax imposed by section 4986 of the Code for the taxable year. For this purpose, the amount of such overpayment is the amount by which such individual's aggregate windfall profit tax liability for the taxable year as a producer of crude oil is reasonably expected to be exceeded by withholding of windfall profit tax for the taxable year.

(5) The excess, if any, of the sum of the amounts shown under subparagraphs (b) (1) and (2) of this paragraph over the sum of the amounts shown under subparagraphs (b)(3) and (4) of this paragraph shall be the estimated tax for the taxable year.

(c) *Use of prescribed form.* Copies of Form 1040–ES will so far as possible be furnished taxpayers by district directors. A taxpayer will not be excused from making a declaration, however, by the fact that no form has been furnished to him. Taxpayers not supplied with the proper form should make application therefor to the district director in ample time to have their declarations prepared, verified, and filed with the district director on or before the date prescribed for filing the declaration. If the prescribed form is not available, a statement disclosing the amount estimated as the tax, the estimated credits, and the estimated tax after deducting such credits should be filed as a tentative declaration within the prescribed time, accompanied by the payment of the required installment. Such tentative declaration should be supplemented, without unnecessary delay, by a declaration made on the proper form.

(Secs. 6015, 6154, 6654, 6655, and 7805, Internal Revenue Code of 1954 (96 Stat. 2395 and 2396, 68A Stat. 917; 26 U.S.C. 6015, 6154, 6654, 6655, and 7805))

[T.D. 6500, 25 FR 12108, Nov. 26, 1960, as amended by T.D. 7427, 41 FR 34028, Aug. 12, 1976; T.D. 8016, 50 FR 11854, Mar. 26, 1985]

§ 1.6015(e)–1 Amendment of declaration.

In the making of a declaration of estimated tax, the taxpayer is required to take into account the then existing facts and circumstances as well as those reasonably to be anticipated relating to prospective gross income, allowable deductions, and estimated credits for the taxable year. Amended or revised declarations may be made in any case in which the taxpayer estimates that his gross income, deductions, or credits will differ from the

gross income, deductions, or credits reflected in the previous declaration. An amended declaration may also be made based upon a change in the number of exemptions to which the taxpayer may be entitled for the then current taxable year. However, only one amended declaration may be filed during any interval between installment dates. See paragraph (d) of § 1.6073–1. An amended declaration may be filed jointly by husband and wife even though separate declarations have previously been filed. An amended declaration may be made on either Form 1040–ES (marked ''Amended''). See, however, paragraph (c) of § 1.6015(d)–1 for procedure to be followed if the prescribed form is not available.

[T.D. 7427, 41 FR 34028, Aug. 12, 1976]

§ 1.6015(f)–1 Return as declaration or amendment.

(a) *Time for filing return.* (1)(i) If a taxpayer pays in full the amount computed on the return as payable, and

(a) If a taxpayer (other than a taxpayer referred to in *(b)* of this subdivision):

(1) On the calendar year basis, files his return on or before January 31 of the succeeding calendar year, or

(2) On a fiscal year basis, files his return on or before the last day of the first month immediately succeeding the close of such fiscal year, or

(b) If an individual referred to in section 6073(b), relating to income from farming, or, with respect to taxable years beginning after December 31, 1962, from fishing:

(1) On the calendar year basis, for taxable years beginning before January 1, 1969, files his return on or before February 15, or

(2) On a fiscal year basis, for taxable years beginning before January 1, 1969, files his return on or before the 15th day of the second month after the close of his fiscal year, or

(3) On the calendar year basis, for taxable years beginning after December 31, 1968, files his return on or before March 1, or

(4) On a fiscal year basis, for taxable years beginning after December 31, 1968, files his return on or before the first day of the third month after the close of his fiscal year, then:

(ii)*(a)* If the declaration is not required to be filed during the taxable year, but is required to be filed on or before January 15 of the succeeding year (or the date corresponding thereto in the case of a fiscal year), such return shall be considered as such declaration; or

(b) If a declaration was filed during the taxable year, such return shall be considered as the amendment of the declaration permitted by section 6015(e) to be filed on or before January 15 of the succeeding year (or the date corresponding thereto in the case of a fiscal year).

Hence, for example, an individual taxpayer on the calendar year basis who, subsequent to September 1, 1963, first meets the requirements of section 6015(a) which necessitate the filing of a declaration for 1963, may satisfy the requirements as to the filing of such declaration by filing his return for 1963 on or before January 31, 1964 (February 15, 1964, in the case of a farmer or fisherman), and paying in full at the time of such filing the tax shown thereon to be payable. Likewise, if a taxpayer files on or before September 15, 1963, a timely declaration for such year and subsequent thereto and on or before January 31, 1964, files his return for 1963, and pays at the time of such filing the tax shown by the return to be payable, such return shall be treated as an amended declaration timely filed.

(2) For the purpose of section 6015(f) a taxpayer may file his return on or before the last day of the first month following the close of the taxable year even though he has not been furnished Form W–2 by his employer. In such case the taxpayer shall compute, as accurately as possible, his wages for such year and the tax withheld for which he is entitled to a credit, reporting such wages and tax on his return, together with all other pertinent information necessary to the determination of his tax liability for such year.

(b) *Effect on addition to the tax.* Compliance with the provisions of section 6015(f) will enable a taxpayer to avoid the addition to the tax imposed by section 6654 with respect to an underpayment of the installment not required to be paid until January 15 of the succeeding calendar year (or the

corresponding date in the case of a fiscal year). With respect to an underpayment of any earlier installment, compliance with section 6015(f) will not relieve the taxpayer from the addition to the tax imposed by section 6654. However, the period of the underpayment under section 6654(c), with respect to any earlier installment, will terminate on January 15 of the succeeding calendar year (or the corresponding date in the case of a fiscal year). For example, a taxpayer discovers on January 14, 1956, that he has underpaid his estimated tax for the calendar year 1955. He may, in lieu of filing an amended declaration on January 15, 1956, and paying the balance of the estimated tax determined thereon, file his final return on January 31, 1956, and pay in full the amount computed thereon as payable. By so doing, he will avoid the addition to the tax with respect to the underpayment of the installment required to be paid by January 15, 1956. The periods of underpayment, under section 6654(c), as to the installments required to be paid on April 15, 1955, June 15, 1955, and September 15, 1955, also terminate on January 15, 1956.

[T.D. 6500, 25 FR 12108, Nov. 26, 1960, as amended by T.D. 7028, 35 FR 3806, Feb. 27, 1970; 35 FR 4293, Mar. 10, 1970]

§ 1.6015(g)–1 Short taxable years of individuals.

(a) *Requirement of declaration*. No declaration may be made for a period of more than 12 months. For purposes of this section a taxable year of 52 or 53 weeks, in the case of a taxpayer who computes his taxable income in accordance with the election permitted by section 441(f) shall be deemed a period of 12 months. For special rules affecting the time for filing declarations and paying estimated tax by such a taxpayer, see paragraph (b) of § 1.441–2. A separate declaration for a fractional part of a year is required where, for example, there is a change, with the approval of the Commissioner, in the basis of computing taxable income from one taxable year to another taxable year. The periods to be covered by such separate declarations in the several cases are those set forth in section 443. No declaration is required if the short taxable year is:

(1) A period of less than four months.

(2) A period of at least four months but less than six months and the requirements of section 6015(a) are first met after the 1st day of the fourth month.

(3) A period of at least six months but less than nine months and the requirements of section 6015(a) are first met after the 1st day of the sixth month, or

(4) A period of nine months or more and the requirements of section 6015(a) are first met after the 1st day of the ninth month.

In the case of a decedent, no declaration need be filed subsequent to the date of death. As to the requirement for an amended declaration if death of one spouse occurs after filing a joint declaration, see paragraph (c) of § 1.6015(b)–1.

(b) *Income and income tax placed on annual basis*. For the purpose of determining whether the anticipated income and tax for a short taxable year resulting from a change of annual accounting period, necessitates the filing of a declaration, income and income tax imposed by chapter 1 (other than by section 56) shall be placed on an annual basis in the manner prescribed in section 443(b)(1). Thus, for example, an unmarried taxpayer who changes from a fiscal year basis to a calendar year basis beginning January 1, 1973, will have a short taxable year beginning July 1, 1972, and ending December 31, 1972. If his anticipated gross income for such short taxable year consists solely of wages (as defined in section 3401(a)) in the amount of $11,000, his total gross income and his gross income from such wages for the purpose of determining whether a declaration is required is $22,000, the amount obtained by placing anticipated income of $11,000 upon an annual basis. Since the taxpayer's anticipated gross income from wages when placed upon an annual basis is in excess of $20,000, he is required to file a declaration of estimated tax for the short taxable year unless the estimated tax can reasonably be expected to be less than $100. However, for taxable years beginning after December 31, 1966, the amount which the individual

estimates as the amount of self-employment tax imposed by chapter 2 shall be computed on the actual self-employment income for the short period.

[T.D. 6500, 25 FR 12108, Nov. 26, 1960, as amended by T.D. 7427, 41 FR 34028, Aug. 12, 1976]

§ 1.6015(h)–1 Estates and trusts.

An estate or trust, though generally taxed as an individual, is not required to file a declaration.

§ 1.6015(i)–1 Nonresident alien individuals.

(a) *Exception from requirement of making a declaration*. No declaration of estimated income tax is required to be made under section 6015(a) and § 1.6015(a)–1 by a nonresident alien individual unless:

(1) Such individual has wages, as defined in section 3401(a), and the regulations thereunder, upon which tax is required to be withheld under section 3402,

(2) Such individual has income (other than compensation for personal services upon which tax is required to be withheld at source under section 1441) which is effectively connected for the taxable year with the conduct of a trade or business in the United States by such individual, or

(3) Such individual has been, or expects to be, a resident of Puerto Rico during the entire taxable year.

(b) *Rules applicable to nonresident alien individuals required to make a declaration*—(1) *Tests to be applied*. A nonresident alien individual who is not excepted by paragraph (a) of this section from the requirement of making a declaration of income tax is required to file a declaration if his gross income meets the requirements of section 6015(a) and § 1.6015(a)–1. In making the determination under section 6015(a)(1) as to whether the amount of the gross income of a nonresident alien individual is such as to require making a declaration of estimated income tax, only the tests relating to a single individual (other than a head of household) or to a married individual not entitled to file a joint declaration with his spouse shall apply, since a nonresident alien individual may not make a joint declaration by reason of section 6015(b) and is not a head of household. Only in a rare case would a nonresident alien individual be a surviving spouse.

(2) *Determination of gross income*. To determine the gross income of a nonresident alien individual who is not, or does not expect to be, a resident of Puerto Rico during the entire taxable year, see section 872 and §§ 1.872–1 and 1.872–2. To determine the gross income of a nonresident alien individual who is, or expects to be, a resident of Puerto Rico during the entire taxable year, see section 876 and § 1.876–1. For purposes of applying paragraph (a)(2) of this section, income which is effectively connected for the taxable year with the conduct of a trade or business in the United States includes all income which is treated under section 871 (c) or (d) and § 1.871–9 (relating to students and trainees) or § 1.871–10 (relating to real property income) as income which is effectively connected for such year with the conduct of a trade or business in the United States.

(c) *Effective date*. This section shall apply for taxable years beginning after December 31, 1966. For corresponding rules applicable to taxable years beginning before January 1, 1967, see 26 CFR 1.6015(a)–1(d) (Rev. as of Jan. 1, 1971).

[T.D. 7332, 39 FR 44232, Dec. 23, 1974]

§ 1.6015(j)–1 Applicability.

Section 6015 is applicable only with respect to taxable years beginning after December 31, 1954. Sections 58, 59, and 60 of the Internal Revenue Code of 1939 and the regulations thereunder, shall continue in force with respect to taxable years beginning before January 1, 1955.

[T.D. 6500, 25 FR 12108, Nov. 26, 1960. Redesignated by T.D. 7332, 39 FR 44232, Dec. 23, 1974]

§ 1.6016–1 Declarations of estimated income tax by corporations.

(a) *Requirement*. For taxable years ending on or after December 31, 1955, a declaration of estimated tax shall be made by every corporation (including unincorporated business enterprises electing to be taxed as domestic corporations under section 1361), which is subject to taxation under section 11 or 1201(a), or subchapter L, chapter 1 of

the Code (relating to insurance companies), if its income tax under such sections or such subchapter L for the taxable year can reasonably be expected to exceed the sum of $100,000 plus the amount of any estimated credits allowable under section 32 (relating to tax withheld at source on nonresident aliens and foreign corporations and on tax-free covenant bonds), section 33 (relating to taxes of foreign countries and possessions of the United States), and section 38 (relating to investment in certain depreciable property).

(b) *Definition of estimated tax.* The term ''estimated tax'', in the case of a corporation, means the excess of the amount which such corporation estimates as its income tax liability for the taxable year under section 11 or 1201(a), or subchapter L, chapter 1 of the Code, over the sum of $100,000 and any estimated credits under sections 32, 33, and 38. However, for the rule with respect to the limitation upon the $100,000 exemption for members of certain electing affiliated groups, see section 243(b)(3)(C)(v) and the regulations thereunder.

(c) *Examples.* The application of this section may be illustrated by the following examples:

Example (1). M, a corporation subject to tax under section 11, reasonably anticipates that it will have taxable income of $224,000 for the calendar year 1964. The normal tax and surtax result in an expected liability of $105,000. M determines that it will not have any allowable credits under sections 32, 33, and 38 for 1964. Since M's expected tax ($105,000) exceeds the exemption ($100,000), a declaration of estimated tax is required to be filed, reporting an estimated tax of $5,000 ($105,000 − $100,000) for the calendar year 1964.

Example (2). Under the facts stated in example (1), except that M estimates it will have an allowable foreign tax credit under section 33 in the amount of $4,000 and an allowable investment credit under section 38 in the amount of $3,000, no declaration is required, since M's expected tax ($105,000) does not exceed the $100,000 plus the allowable credits totaling $7,000.

[T.D. 6768, 29 FR 14921, Nov. 4, 1964]

§ 1.6016–2 Contents of declaration of estimated tax.

(a) *In general.* The declaration of estimated tax by a corporation shall be made on Form 1120–ES. For the purpose of making the declaration, the estimated tax should be based upon the amount of gross income which the taxpayer can reasonably be expected to receive or accrue as the case may be, depending upon the method of accounting upon the basis of which the taxable income is computed, and the amount of the estimated allowable deductions and credits to be taken into account. Such amounts of gross income, deductions, and credits should be determined upon the basis of facts and circumstances existing as at the time prescribed for the filing of the declaration as well as those reasonably to be anticipated for the taxable year.

(b) *Use of prescribed form.* Copies of Form 1120–ES will so far as possible be furnished taxpayers by district directors. A taxpayer will not be excused from making a declaration, however, by the fact that no form has been furnished. Taxpayers not supplied with the proper form should make application therefor to the district director in ample time to have their declarations prepared, verified, and filed with the district director on or before the date prescribed for filing the declaration. If the prescribed form is not available a statement disclosing the estimated income tax after the exemption and the credits, if any, should be filed as a tentative declaration within the prescribed time, accompanied by the payment of the required installment. Such tentative declaration should be supplemented, without unnecessary delay, by a declaration made on the proper form.

§ 1.6016–3 Amendment of declaration.

In the making of a declaration of estimated tax the corporation is required to take into account the then existing facts and circumstances as well as those reasonably to be anticipated relating to prospective gross income, allowable deductions, and estimated credits for the taxable year. Amended or revised declarations may be made in any case in which the corporation estimates that its gross income, deductions, or credits will materially change the estimated tax reported in the previous declaration. However, for the rule with respect to the number of amended declarations which may be filed for taxable years beginning after December 31, 1963, see paragraph (d)(2)

of § 1.6074–1. Such amended declaration may be made on either Form 1120–ES (marked ''Amended'') or on the reverse side of the installment notice furnished the corporation by the district director. See, however, paragraph (b) of § 1.6016–2 for procedure to be followed if the prescribed form is not available.

[T.D. 6768, 29 FR 14922, Nov. 4, 1964]

§ 1.6016–4 Short taxable year.

(a) *Requirement of declaration*. No declaration may be made for a period of more than 12 months. For purposes of this section a taxable year of 52 or 53 weeks, in the case of a corporation which computes its taxable income in accordance with the election permitted by section 441(f), shall be deemed a period of 12 months. For special rules affecting the time for filing declarations and paying estimated tax by such corporation, see paragraph (b) of § 1.441–2. A separate declaration is required where a corporation is required to submit an income tax return for a period of less than 12 months, but only if such short period ends on or after December 31, 1955. However, no declaration is required if the short taxable year:

(1) Begins on or before December 31, 1963, and is:

(i) A period of less than 9 months, or

(ii) A period of 9 or more months but less than 12 months and the requirements of section 6016(a) are not met before the 1st day of the last month in the short taxable year, or

(2) Begins after December 31, 1963, and is:

(i) A period of less than 4 months, or

(ii) A period of 4 or more months but less than 12 months and the requirements of section 6016(a) are not met before the 1st day of the last month in the short taxable year.

(b) *Income placed on an annual basis*. In cases where the short taxable year results from a change of annual accounting period, for the purpose of determining whether the anticipated income for a short taxable year will result in an estimated tax liability requiring the filing of a declaration, such income shall be placed on an annual basis in the manner prescribed in section 443(b)(1). If a tax computed on such annualized income exceeds the sum of $100,000 and any credits under part IV, of subchapter A, chapter 1 of the Code, the estimated tax shall be the same part of the excess so computed as the number of months in the short period is of 12 months. Thus, for example, a corporation which changes from a calendar year basis to a fiscal year basis beginning October 1, 1956, will have a short taxable year beginning January 1, 1956, and ending September 30, 1956. If on or before August 31, 1956, the taxpayer anticipates that it will have income of $264,000 for the 9-month taxable year the estimated tax is computed as follows:

(1) Anticipated taxable income for 9 months	$264,000
(2) Annualized income ($264,000×12÷9)	352,000
(3) Tax liability on item (2)	177,540
(4) Item (3) reduced by $100,000 (there are no credits under part IV, subchapter A, chapter 1 of the Code)	77,540
(5) Estimated tax for 9-month period ($77,540×9÷12)	58,155

Since the tax liability on the annualized income is in excess of $100,000, a declaration is required to be filed, reporting an estimated tax of $58,155 for the 9-month taxable period. This paragraph has no application where the short taxable year does not result from a change in the taxpayer's annual accounting period.

[T.D. 6500, 25 FR 12108, Nov. 26, 1960, as amended by T.D. 6768, 29 FR 14922, Nov. 4, 1964]

§ 1.6017–1 Self-employment tax returns.

(a) *In general*. (1) Every individual, other than a nonresident alien, having net earnings from self-employment, as defined in section 1402, of $400 or more for the taxable year shall make a return of such earnings. For purposes of this section, an individual who is a resident of the Virgin Islands, Puerto Rico, or (for any taxable year beginning after 1960) Guam or American Samoa is not to be considered a nonresident alien individual. See paragraph (d) of § 1.1402(b)–1. A return is required under this section if an individual has self-employment income, as defined in section 1402(b), even though he may not be required to make a return under section 6012 for purposes of the tax imposed by section 1 or 3. Provisions applicable to returns under section 6012(a) shall be applicable to returns under this section.

(2) Except as otherwise provided in this subparagraph, the return required by this section shall be made on Form 1040. The form to be used by residents of the Virgin Islands, Guam, or American Samoa is From 1040SS. In the case of a resident of Puerto Rico who is not required to make a return of income under section 6012(a), the form to be used is Form 1040SS, except that Form 1040PR shall be used if it is furnished by the Internal Revenue Service to such resident for use in lieu of Form 1040SS.

(b) *Joint returns.* (1) In the case of a husband and wife filing a joint return under section 6013, the tax on self-employment income is computed on the separate self-employment income of each spouse, and not on the aggregate of the two amounts. The requirement of section 6013(d)(3) that in the case of a joint return the tax is computed on the aggregate income of the spouses is not applicable with respect to the tax on self-employment income. Where the husband and wife each has net earnings from self-employment of $400 or more, it will be necessary for each to complete separate schedules of the computation of self-employment tax with respect to the net earnings of each spouse, despite the fact that a joint return is filed. If the net earnings from self-employment of either the husband or the wife are less than $400, such net earnings are not subject to the tax on self-employment income, even though they must be shown on the joint return for purposes of the tax imposed by section 1 or 3.

(2) Except as otherwise expressly provided, section 6013 is applicable to the return of the tax on self-employment income; therefore, the liability with respect to such tax in the case of a joint return is joint and several.

(c) *Social security account numbers.* (1) Every individual making a return of net earnings from self-employment for any period commencing before January 1, 1962, is required to show thereon his social security account number, or, if he has no such account number, to make application therefor on Form SS–5 before filing such return. However, the failure to apply for or receive a social security account number will not excuse the individual from the requirement that he file such return on or before the due date thereof. Form SS–5 may be obtained from any district office of the Social Security Administration or from any district director. The application shall be filed with a district office of the Social Security Administration or, in the case of an individual not in the United States, with the district office of the Social Security Administration at Baltimore, Md. An individual who has previously secured a social security account number as an employee shall use that account number on his return of net earnings from self-employment.

(2) For provisions applicable to the securing of identifying numbers and the reporting thereof on returns and schedules for periods commencing after December 31, 1961, see § 1.6109–1.

(d) *Declaration of estimated tax with respect to taxable years beginning after December 31, 1966.* For taxable years beginning after December 31, 1966, section 6015 provides that the term ''estimated tax'' includes the amount which an individual estimates as the amount of self-employment tax imposed by chapter 2 for the taxable year. Thus, individuals upon whom self-employment tax is imposed by section 1401 must make a declaration of estimated tax if they meet the requirements of section 6015(a); except as otherwise provided under section 6015(i).

[T.D. 6500, 25 FR 12108, Nov. 26, 1960, as amended by T.D. 6691, 28 FR 12816, Dec. 3, 1963; T.D. 7427, 41 FR 34028, Aug. 12, 1976]

INFORMATION RETURNS

§ 1.6031(a)–1 Return of partnership income.

(a) *Domestic partnerships*—(1) *Return required.* Except as provided in paragraphs (a)(3) and (c) of this section, every domestic partnership must file a return of partnership income under section 6031 (partnership return) for each taxable year on the form prescribed for the partnership return. The partnership return must be filed for the taxable year of the partnership regardless of the taxable years of the partners. For taxable years of a partnership and of a partner, see section 706 and

§ 1.706–1. For the rules governing partnership statements to partners and nominees, see § 1.6031(b)–1T.

(2) *Content of return.* The partnership return must contain the information required by the prescribed form and the accompanying instructions.

(3) *Special rule.* A partnership that has no income, deductions, or credits for federal income tax purposes for a taxable year is not required to file a partnership return for that year.

(4) *Failure to file.* For the consequences of a failure to comply with the requirements of section 6031(a) and this paragraph (a), see sections 6229(a), 6231(f), 6698, and 7203.

(b) *Foreign partnerships*—(1) *General rule.* A foreign partnership is not required to file a partnership return, if the foreign partnership does not have gross income that is (or is treated as) effectively connected with the conduct of a trade or business within the United States (ECI) and does not have gross income (including gains) derived from sources within the United States (U.S.-source income). Except as provided in paragraphs (b)(2) and (3) of this section, a foreign partnership that has ECI or has U.S.-source income that is not ECI must file a partnership return for its taxable year in accordance with the rules for domestic partnerships in paragraph (a) of this section.

(2) *Foreign partnerships with de minimis U.S.-source income and de minimis U.S. partners.* A foreign partnership (other than a withholding foreign partnership, as defined in § 1.1441–5(c)(2)(i)) that has $20,000 or less of U.S.-source income and has no ECI during its taxable year is not required to file a partnership return if, at no time during the partnership taxable year, one percent or more of any item of partnership income, gain, loss, deduction, or credit is allocable in the aggregate to direct United States partners. The United States partners must directly report their shares of the allocable items of partnership income, gain, loss, deduction, and credit.

(3) *Filing obligations for certain other foreign partnerships with no ECI*—(i) *General requirements for modified filing obligations.* A foreign partnership will be subject to the modified filing obligations in paragraphs (b)(3)(ii) and (iii) of this section if, in addition to satisfying the requirements contained in paragraphs (b)(3)(ii) and (iii) of this section—

(A) The partnership is not a withholding foreign partnership as defined in § 1.1441–5(c)(2)(i);

(B) Forms 1042 and 1042–S are filed by the partnership with respect to the amounts subject to reporting under § 1.1461–1(b) and (c), unless the partnership is not required to file such returns under § 1.1461–1(b)(2) and (c)(4), in which case Forms 1042 and 1042–S must be filed by another withholding agent or agents; and

(C) The tax liability of the partners withrespect to such amounts has been fully satisfied by the withholding of tax at the source, if applicable, under chapter 3 of the Internal Revenue Code.

(ii) *Foreign partnerships with U.S.-source income but no U.S. partners.* A foreign partnership that has U.S.-source income is not required to file a partnership return if the partnership has no ECI and no United States partners at any time during the partnership's taxable year.

(iii) *Foreign partnerships with U.S.-source income and U.S. partners.* Except as provided in paragraph (b)(2) of this section, a foreign partnership with one or more United States partners that has U.S.-source income but no ECI must file a partnership return. However, such a foreign partnership need not file Statements of Partner's Share of Income, Credit, Deduction, etc. (Schedules K–1) for any partners other than its direct United States partners and its passthrough partners (whether U.S. or foreign) through which United States partners hold an interest in the foreign partnership. Schedules K–1 that are not excepted from filing under this paragraph (b)(3)(iii) must contain the same information required of a domestic partnership filing under paragraph (a) of this section.

(4) *Information or returns required of partners who are United States persons*—(i) *In general.* If a United States person is a partner in a partnership that is not required to file a partnership return, the district director or director of the relevant service center may require that person to render the statements or provide the information necessary

to verify the accuracy of the reporting by that person of any items of partnership income, gain, loss, deduction, or credit.

(ii) *Controlled foreign partnerships.* Certain United States persons who are partners in a foreign partnership controlled (within the meaning of section 6038(e)(1)) by United States persons may be required to provide information with respect to the partnership under section 6038.

(5) *Certain partnership elections.* For a partnership that is not otherwise required to file a partnership return, if an election that can only be made by the partnership under section 703 (affecting the computation of taxable income derived from a partnership) is to be made by or for the partnership, a return on the form prescribed for the partnership return must be filed for the partnership. Unless otherwise provided in the form or the accompanying instructions, a return filed solely to make an election need only contain a written statement citing paragraph (b)(5)(ii) of this section, listing the name and address of the partnership making the election, and clearly identifying the specific election being made. A return filed under paragraph (b)(5)(ii) of this section solely to make an election is not a partnership return. Thus, such a return is not a return filed under section 6031(a) for purposes of sections 6501 (except regarding the specific election issue), 6231(a)(1)(A), and 6233. The return must be signed by—

(i) Each partner that is a partner in the partnership at the time the election is made; or

(ii) Any partner of the partnership who is authorized (under local law or the partnership's organizational documents) to make the election and who represents to having such authorization under penalties of perjury.

(6) *Exclusion for certain organizations.* The return requirement of section 6031 and this section does not apply to the International Telecommunications Satellite Organization, the International Maritime Satellite Organization, or any organization that is a successor of either.

(c) *Partnerships excluded from the application of subchapter K of the Internal Revenue Code*—(1) *Wholly excluded*—(i) *Year of election.* An eligible partnership as described in §1.761–2(a) that elects to be excluded from all the provisions of subchapter K of chapter 1 of the Internal Revenue Code in the manner specified by §1.761–2(b)(2)(i) must timely file the form prescribed for the partnership return for the taxable year for which the election is made. In lieu of the information otherwise required, the return must contain or be accompanied by the information required by §1.761–2(b)(2)(i).

(ii) *Subsequent years.* Except as otherwise provided in paragraph (c)(1)(i) of this section, an eligible partnership that elects to be wholly excluded from the application of subchapter K is not required to file a partnership return.

(2) *Deemed excluded.* An eligible partnership that is deemed to have elected exclusion from the application of subchapter K beginning with its first taxable year, as specified in §1.761–2(b)(2)(ii), is not required to file a partnership return.

(d) *Definitions*—(1) *Partnership.* For the meaning of the term partnership, see §1.761–1(a).

(2) *United States person.* In applying this section, a United States person is a person described in section 7701(a)(30); the government of the United States, a State, or the District of Columbia (including an agency or instrumentality thereof); or a corporation created or organized in Guam, the Commonwealth of Northern Mariana Islands, the U.S. Virgin Islands, and American Samoa, if the requirements of section 881(b)(1)(A), (B), and (C) are met for such corporation. The term does not include an alien individual who is a resident of Puerto Rico, Guam, the Commonwealth of Northern Mariana Islands, the U.S. Virgin Islands, or American Samoa, as determined under §301.7701(b)–1(d) of this chapter.

(3) *United States partner.* In applying this section, a United States partner is any United States person who holds a direct or indirect interest in the partnership.

(4) *Indirect interest.* An indirect interest is any interest held through one or more passthrough partners, as defined in section 6231(a)(9).

(e) *Procedural requirements*—(1) *Place for filing*. The return of a partnership must be filed with the service center prescribed in the relevant IRS revenue procedure, publication, form, or instructions to the form (see § 601.601(d)(2)).

(2) *Time for filing*. The return of a partnership must be filed on or before the fifteenth day of the fourth month following the close of the taxable year of the partnership.

(3) *Magnetic media filing*. For magnetic media filing requirements with respect to partnerships, see section 6011(e)(2) and the regulations thereunder.

(f) *Effective dates*. This section applies to taxable years of a partnership beginning after December 31, 1999, except that paragraph (b)(3) of this section applies to taxable years of a foreign partnership beginning after December 31, 2000.

[T.D. 8841, 64 FR 61500, Nov. 12, 1999]

§ 1.6031(b)–1T Statements to partners (temporary).

(a) *Statement required to be furnished to partners*—(1) *In general*. Except as provided in this paragraph (a)(1) and paragraph (a)(2)(ii) of this section, any partnership required under section 6031(a) and the regulations thereunder to file a partnership return for a taxable year shall furnish to every person who was a partner (within the meaning of section 7701(a)(2)) at any time during the taxable year a written statement containing the information described in paragraph (a)(3) of this section. This section shall not apply to a real estate mortgage investment conduit (REMIC) treated as a partnership under subtitle F of the Code by reason of section 860F(e). For the reporting requirements applicable to REMICs see § 1.6031(b)–2T.

(2) *Special rules applicable to partnership interests held by nominees*—(i) *Statements furnished to nominees*. For any partnership taxable year beginning after October 22, 1986, a partnership shall provide a person that holds (directly or indirectly) an interest in such partnership as a nominee on behalf of another person at any time during such year with a statement under paragraph (a)(1) of this section with respect to such interest if—

(A) Such nominee has not furnished the statement required under § 1.6031(c)–1T(a)(1)(i) to the partnership with respect to such other person;

(B) Such nominee either holds legal title to such partnership interest in its own name or is identified in a statement provided to the partnership pursuant to § 1.6031(c)–1T(a)(1)(i) by another nominee as the person on whose behalf such other nominee holds such interest; and

(C) Such nominee is not a person described in § 1.6031(c)–1T(a)(2) (relating to the special rule for clearing agencies).

In such case, the partnership shall assume, for purposes of this section, that the nominee is the beneficial owner of the partnership interest.

(ii) *Statements not required to be furnished to partners holding partnership interests through nominees*. A partnership shall not be required to furnish a statement under paragraph (a)(1) of this section to a partner with respect to any portion of such partner's interest in the partnership that is owned through a nominee if—

(A) Such nominee has not furnished (or is not required to furnish under § 1.6031(c)–1T(a)(2)), a statement to the partnership under § 1.6031(c)–1T(a)(1)(i) with respect to such partner; and

(B) Such partner has not furnished (or is not required to furnish) a statement to the partnership under § 1.6031(c)–1T(a)(3), with respect to such interest in the partnership.

(3) *Contents of statement*. The statement required under paragraph (a)(1) of this section shall include the following information:

(i) The partner's distributive share of partnership income, gain, loss, deduction, or credit required to be shown on the partnership return (or, for taxable years beginning before January 1, 1987, the partner's distributive share of partnership income, gain, loss, deduction, or credit shown on the partnership return); and

(ii) To the extent provided by form or the accompanying instructions, any additional information that may be required to apply particular provisions of subtitle A of the Code to the partner with respect to items related to the partnership.

(b) *Time for furnishing statement.* The statement required to be furnished by the partnership under paragraph (a)(1) of this section shall be furnished on or before the day on which the partnership return for that taxable year is required to be filed (determined with regard to extensions). For partnership returns the due date for which (determined without regard to extensions) is before January 1, 1987, the statement required to be furnished by the partnership under paragraph (a)(1) of this section shall be furnished on or before the day on which the partnership return is filed.

(c) *Statement may be provided to agent.* If a partner designates another person, such as an attorney or an investment advisor, as the partner's (or nominee's) agent in dealing with the partnership, the partnership may provide the statement required under paragraph (a)(1) of this section with respect to such partner to such other person instead of the partner.

(d) *Penalties.* For penalties for failure to comply with the requirements of section 6031(b) and paragraph (a) of this section, see section 6722(a).

(e) *Effective date.* Except as otherwise provided in this section, the provisions of this section apply to partnership taxable years beginning after September 3, 1982.

[T.D. 8225, 53 FR 34490, Sept. 7, 1988]

§ 1.6031(b)–2T REMIC reporting requirements (temporary). [Reserved]

§ 1.6031(c)–1T Nominee reporting of partnership information (temporary).

(a) *Statements required to be furnished to partnership*—(1) *Statement from nominee*—(i) *In general.* Except as otherwise provided in this section, any person who holds, directly or indirectly, an interest in a partnership (required under section 6031(a) and the regulations thereunder to file a partnership return for a taxable year) as a nominee on behalf of another person at any time during the partnership taxable year shall furnish to the partnership a written statement (or statements) for that taxable year with respect to such other person containing the information described in paragraph(a)(1)(ii) of this section.

(ii) *Contents of statement.* The statement required under paragraph (a)(1)(i) of this section shall, except as otherwise provided in paragraph (a)(4) of this section, include the following information:

(A) The name, address, and taxpayer identification number of the nominee;

(B) The name, address, and taxpayer identification number of such other person;

(C) Whether such other person is—

(*1*) A person that is not a United States person;

(*2*) A foreign government, an international organization, or any wholly-owned agency or instrumentality of either of the foregoing; or

(*3*) A tax-exempt entity (within the meaning of section 168(h)(2));

(D) A description of any interest in the partnership held by the nominee on behalf of such other person at the beginning of the partnership taxable year;

(E) A description of any interest in the partnership that the nominee acquires (within the meaning of paragraph (g)(1) of this section) on behalf of such other person during the partnership taxable year, the method of acquisition (e.g., purchase, exchange, acquisition at death, gift, or commencement of nominee relationship) and acquisition cost (within the meaning of paragraph (g)(2) of this section) of such interest, and the date of the acquisition of such interest; and

(F) A description of any interest in the partnership that the nominee transfers (within the meaning of paragraph (g)(5) of this section) on behalf of such other person during the partnership taxable year, the net proceeds from the transfer (within the meaning of paragraph (g)(6) of this section) of such interest, and the date of the transfer of such interest.

A description of a partnership interest must include sufficient detail to enable the partnership to furnish to such other person the statement required under § 1.6031(b)–1T (a).

(2) *Special rule for clearing agencies.* A clearing agency registered pursuant to the provisions of section 17A of the Securities Exchange Act of 1934 (or its

nominee) that holds an interest in a partnership as a nominee on behalf of another person shall not be required to furnish any statement described in paragraph (a)(1)(i) of this section with respect to such interest.

(3) *Special rule for brokers and financial institutions*—(i) *Additional statement required.* Any broker (within the meaning of paragraph (g)(3) of this section) or financial institution (within the meaning of paragraph (g)(4) of this section) that holds an interest in a partnership indirectly through a nominee described in paragraph (a)(2) of this section at any time during a partnership taxable year shall furnish (in addition to any statement (or statements) required under paragraph (a)(1)(i) of this section) to the partnership a written statement (or statements) containing the information described in paragraph (a)(3)(ii) of this section with respect to any interest in such partnership that it holds (directly or indirectly) for its own account at any time during such partnership taxable year.

(ii) *Contents of statement.* The statement required under paragraph (a)(3)(i) of this section shall, except as otherwise provided in paragraph (a)(4) of this section, include the following information:

(A) The name, address, and taxpayer identification number of the broker or financial institution;

(B) Whether such broker of financial institution is a person that is not a United States person;

(C) A description of any interest in the partnership held by the broker or financial institution for its own account at the beginning of the partnership taxable year;

(D) A description of any interest in the partnership that the broker or financial institution acquires for its own account during the partnership taxable year, the method of acquisition and acquisition cost of such interest, and the date of the acquisition of such interest; and

(E) A description of any interest in the partnership that the broker or financial institution transfers for its own account during the partnership taxable year, the net proceeds from the transfer of such interest, and the date of the transfer of such interest.

A description of a partnership interest held by a broker or financial institution for its own account must include sufficient detail to enable the partnership to furnish to the broker or financial institution the statement required under § 1.6031(b)–1T (a).

(4) *Exception*—(i) *In general.* Except as otherwise provided in this paragraph (a)(4), any statement required under paragraph (a) (1)(i) or (3)(i) of this section for a taxable year is not required to include—

(A) That part of the information described in paragraph (a) (1)(ii)(E) and (3)(ii)(D) of this section regarding the method of acquisition and acquisition cost; or

(B) That part of the information described in paragraph (a)(1)(ii)(F) and (3)(ii)(E) of this section regarding the net proceeds from the transfer;

to the extent that, prior to the beginning of the partnership taxable year, the partnership has provided the nominee with a written statement that the nominee need not provide such information to the partnership, and the partnership has not modified or revoked such statement. For purposes of the preceding sentence, the modification or revocation of a statement furnished to a nominee is effective for a partnership taxable year if and only if the partnership notifies the nominee of such modification or revocation by a written statement more than 60 days before the beginning of the partnership taxable year. The nominee shall retain a copy of any statement that is furnished to it by the partnership under this paragraph (a)(4) in the nominee's records so long as the contents thereof may become material in the administration of any internal revenue law.

(ii) *Effect of election under section 754.* Paragraph (a)(4)(i)(A) of this section shall not apply to a partnership taxable year if—

(A) The partnership has an election in effect under section 754 (relating to optional adjustment to basis of partnership property) for such taxable year; and

(B) The nominee knows or has reason to know of such election more than 60 days before the beginning of such taxable year.

(5) *Examples*. The following examples illustrate the application of this paragraph (a):

Example (1). B, a broker, holds 50 units of interest in Partnership P, a calendar year partnership, in street name for customer A, the beneficial owner. B holds the units on behalf of A at all times during 1989. B must furnish a statement to P for calendar year 1989 under paragraph (a)(1)(i) of this section that includes the information required under paragraph (a)(1)(ii) (A) through (D) of this section. The description of the partnership interest held by B on A's behalf on January 1, 1989, must identify the number of units of P held by B on A's behalf at that time (50), and the class of the partnership interest (including the Committee on Uniform Security Identification Procedures (CUSIP) number of the partnership interest, if known).

Example (2). The facts are the same as in example (1), except that pursuant to A's instructions, B sells 25 of A's units of interest in P on August 1, 1989, receiving net proceeds from the transfer of $500. In addition to the information described in example (1), the statement that B must furnish to P must include the class of the partnership interest transferred (including the CUSIP number of the partnerhsip interest, if known), the number of units transferred (25), the net proceeds from the transfer ($500), and the date of the transfer (August 1, 1989.)

Example (3). The facts are the same as in example (1), except that A is not the beneficial owner, but rather holds the units as a nominee on behalf of C, the beneficial owner, at all times during 1989. In addition to the statement that B must furnish to P (as described in Example (1) of this paragraph (a)(5)), A must furnish a statement to P for calendar year 1989 under paragraph (a)(1)(i) of this section that includes the information required under paragraph (a)(1)(ii) (A) through (D) of this section. If both A and B provide P with the statement required under paragraph (a)(1)(i) of this section, P must provide C with the statement required under § 1.6031(b)–1T (a)(1).

(b) *Time for furnishing statements*. A nominee may furnish to the partnership any statement required under paragraph (a) of this section annually, quarterly, monthly, or on any other basis, provided that all statements required to be furnished under paragraph (a) of this section for a partnership taxable year shall be furnished on or before the last day of the first month following the close of such partnership taxable year.

(c) *Use of magnetic media*. A nominee required to furnish a written statement under paragraph (a) of this section, may, in lieu of furnishing such written statement, furnish the required information on magnetic tape or by other media if the partnership and the nominee so agree.

(d) *Use of single document*. Any person who holds interests in a partnership as a nominee on behalf of more than one other person during the partnership taxable year, may, in lieu of furnishing to the partnership a separate statement for each such other person, furnish to the partnership a single document which includes, for each such other person, the information described in paragraph (a)(1)(ii) of this section. To the extent that a single document is used, references in this section to the statement required under paragraph (a)(1)(i) of this section shall be deemed to refer also to the information included in a single document under this paragraph (d).

(e) *Retention of information*. The nominee shall retain a copy of any statement that is furnished to the partnership under this section in the nominee's records so long as the contents thereof may become material in the administration of any internal revenue law.

(f) *Use of agent*. If a partnership has designated another person, such as a clearing organization, as the partnership's agent for purposes of receiving the statements required under paragraph (a) of this section, such statements may be furnished to that other person instead of the partnership. If a nominee has designated another person as its agent for purposes of furnishing to the partnership (or its agent) the statements required under paragraph (a) of this section, that other person may furnish such statements to the partnership (or its agent) on behalf of the nominee.

(g) *Meaning of terms*. For purposes of this section, the following terms have the meanings set forth below:

(1) The term *acquires* means—

(i) A purchase or other acquisition of a partnership interest; or

(ii) The commencement of a nominee relationship, including the substitution of one nominee for another.

(2) The term *acquisition cost* means the sum of any money paid and the fair

market value of any property (other than money) transferred to acquire a partnership interest increased by any expenses paid or incurred with respect to the acquisition (such as broker's fees or commissions).

(3) The term *broker* shall have the meaning set forth in paragraph (a)(1) of § 1.6045ca–1.

(4) The term *financial institution* means a financial institution such as a bank, mutual savings bank, savings and loan association, building and loan association, cooperative bank, homestead association, credit union, industrial loan association or bank or other similar organization.

(5) The term *transfer* means—

(i) A sale, exchange, or other disposition of a partnership interest; or

(ii) The termination of a nominee relationship, including the substitution of one nominee for another.

(6) The term *net proceeds from the transfer* means the sum of any money and the fair market value of any property (other than money) received in connection with a transfer of a partnership interest reduced by any expenses paid or incurred with respect to the transfer (such as broker's fees or commissions).

(7) The term *person* includes the United States, a State, the District of Columbia, a foreign government, a political subdivision of a State or foreign government, or an international organization.

(h) *Statement required by nominees that do not comply with § 1.6031(c)–1T (a)*—(1) *In general.* Any person that—

(i) Holds an interest in a partnership as a nominee (other than a nominee described in paragraph (a)(3) of this section) on behalf of another person at any time during the partnership taxable year;

(ii) Does not furnish to such partnership the statement required under paragraph (a)(1)(i) of this section for such other person with respect to such interest in the partnership; and

(iii) Receives from such partnership the statement described in paragraph (a)(1) of § 1.6031(b)–1T with respect to such interest in the partnership;

shall furnish to such other person a written statement containing the information described in paragraph (h)(2) of this section with respect to such interest in the partnership.

(2) *Contents of statement.* The statement required under paragraph (h)(1) of this section shall contain the following information:

(i) The distributive share of partnership income, gain, loss, deduction or credit required to be shown on the partnership return that is allocable to such interest in the partnership; and

(ii) Any additional information that may be required to apply particular provisions of subtitle A of the Code to the beneficial owner of such interest in the partnership in connection with items related to the partnership.

(3) *Time for furnishing statements.* A nominee shall furnish the statement required under paragraph (h)(1) of this section within 30 days after receiving the statement described in paragraph (a) of § 1.6031(b)–1T.

(i) *REMICs.* This section shall not apply with respect to any interest in a real estate mortgage investment conduit (REMIC) treated as a partnership under subtitle F of the Code by reason of section 860F(e). For the nominee reporting requirements with respect to REMICs see § 1.6031(c)–2T.

(j) *Penalties.* [Reserved]

(k) *Effective date*—(1) *In general.* Except as otherwise provided in paragraph (k)(2) of this section, the provisions of this section shall apply to partnership taxable years beginning after October 22, 1986.

(2) *Transitional rule for taxable years beginning before January 1, 1989.* For partnership taxable years beginning before January 1, 1989, —

(i) Any statement that a nominee is required to furnish to a partnership under paragraph (a)(1) of this section shall not be required to include the following information:

(A) The information described in paragraph (a)(1)(ii)(C) of this section;

(B) That part of the information described in paragraph (a)(1)(ii)(E) of this section regarding the method of acquisition and acquisition cost of a partnership interest; or

(C) That part of the information described in paragraph (a)(1)(ii)(F) of this section regarding the net proceeds from the transfer of a partnership interest.

(ii) A broker or financial institution shall not be required to furnish the additional statement described in paragraph (a)(3)(i) of this section.

[T.D. 8225, 53 FR 34491, Sept. 7, 1988]

§ 1.6031(c)–2T Nominee reporting of REMIC information (temporary). [Reserved]

§ 1.6032–1 Returns of banks with respect to common trust funds.

Every bank (as defined in section 581) maintaining a common trust fund shall make a return of income of the common trust fund, regardless of the amount of its taxable income. Member banks of an affiliated group that serve as co-trustees with respect to a common trust fund must act jointly in making a return for the fund. If a bank maintains more than one common trust fund, a separate return shall be made for each. No particular fund is prescribed for making the return under this section, but form 1065 may be used if it is designated by the bank as the return of a common trust fund. The return shall be made for the taxable year of the common trust fund and shall be filed on or before the 15th day of the fourth month following the close of such taxable year with the district director for the district in which the income tax return of the bank is filed. Such return shall state specifically with respect to the fund the items of gross income and the deductions allowed by subtitle A of the Code, shall include each participant's name and address, the participant's proportionate share of taxable income or net loss (exclusive of gains and losses from sales or exchanges of capital assets), the participant's proportionate share of gains and losses from sales or exchanges of capital assets, and the participant's share of items which enter into the determination of the tax imposed by section 56. See § 1.584–2 and § 1.58–5. If the common trust fund is maintained by two or more banks that are members of the same affiliated group, the return must also identify the member bank in the group that has contributed each participant's property or money to the fund. A copy of the plan of the common trust fund must be filed with the return. If, however, a copy of such plan has once been filed with a return, it need not again be filed if the return contains a statement showing when and where it was filed. If the plan is amended in any way after such copy has been filed, a copy of the amendment must be filed with the return for the taxable year in which the amendment was made. For the signing of a return of a bank with respect to common trust funds, see § 1.6062–1, relating to the manner prescribed for the signing of a return of a corporation.

[T.D. 7564, 43 FR 40497, Sept. 12, 1978, as amended by T.D. 7935, 49 FR 1695, Jan. 13, 1984]

§ 1.6033–1 Returns by exempt organizations; taxable years beginning before January 1, 1970.

(a) *In general.* (1) Except as provided in section 6033(a) and paragraph (g) of this section, every organization exempt from taxation under section 501(a) shall file an annual return of information specifically stating its items of gross income, receipts and disbursements, and such other information as may be prescribed in the instructions issued with respect to the return. Such information return shall be filed annually regardless of the amount or source of the income or receipts of the organization. Except as provided in paragraph (d) of this section, such return shall be filed annually regardless of whether such organization is chartered by, or affiliated or associated with, any central, parent, or other organization.

(2)(i) Except as otherwise provided in this subparagraph, every organization exempt from taxation under section 501 (a), and required to file a return under section 6033 and this section, other than an organization described in section 401 (a), 501(c) (3), or 501(d), shall file its annual return on Form 990. However, such an exempt organization, instead of filing Form 990, may file its annual return on Form 990 (SF), a short form, if its gross receipts for the taxable year do not exceed $10,000 and its total assets on the last day of its taxable year do not exceed $10,000.

(ii) For purposes of this subparagraph and subparagraph (4) of this paragraph, ''gross receipts'' means the gross amount received by the organization during its annual accounting period

from all sources without reduction for any costs or expenses including, for example, cost of goods or assets sold, cost of operations, or expenses of earning, raising, or collecting such amounts. Thus, ''gross receipts'' includes, but is not limited to, *(a)* the gross amount received as contributions, gifts, grants, and similar amounts without reduction for the expenses of raising and collecting such amounts, *(b)* the gross amount received as dues or assessments from members or affiliated organizations without reduction for expenses attributable to the receipt of such amounts, *(c)* gross sales or receipts from business activities (including business activities unrelated to the purpose for which the organization received an exemption, the net income or loss from which may be required to be reported on Form 990–T), *(d)* the gross amount received from the sale of assets without reduction for cost or other basis and expenses of sale, and *(e)* the gross amount received as investment income such as interest, dividends, rents, and royalties.

(3) Every employees' trust described in section 401 (a) which is exempt from taxation under section 501 (a) shall file an annual return on Form 990–P. The return shall include the information required by paragraph (b)(5) (ii) of § 1.401–1. In addition, the trust must file the information required to be filed by the employer pursuant to the provisions of § 1.404(a)–2, unless the employer has notified the trustee in writing that he has or will timely file such information. If the trustee has received such notification from the employer, then such notification, or a copy thereof, shall be retained by the trust as a part of its records.

(4) Except as otherwise provided in this subparagraph, every organization described in section 501(c) (3), which is required to file a return under section 6033 and this section, shall file its annual return on Form 990–A. However, such an exempt organization, instead of filing Form 990–A, may file its annual return on Form 990–A (SF), a short form, if its gross receipts for the taxable year do not exceed $10,000 and its total assets on the last day of its taxable year do not exceed $10,000. For purposes of this subparagraph, ''gross receipts'' shall be defined in the manner prescribed in subparagraph (2) (ii) of this paragraph. The forms prescribed by this subparagraph shall be as follows:

(i) Form 990–A shall consist of parts I and II. Part I shall contain, in addition to information required in part II, such information as may be prescribed in the return and instructions which is required to be furnished by section 6033(a) or which is necessary to show whether or not such organization is exempt from tax under section 501(a). Part II, which shall be open to public inspection pursuant to section 6104 and other applicable sections and the regulations thereunder, shall contain principally the information required by section 6033(b) and the regulations thereunder. The information contained in part II, to be furnished by the organization in duplicate in the manner prescribed by the instructions issued with respect to the return, is as follows:

(a) Its gross income for the year. For this purpose, gross income includes tax-exempt income, but does not include contributions, gifts, grants, and similar amounts received. Whether or not an item constitutes a contribution, gift, grant, or similar amount, depends upon all the surrounding facts and circumstances.

(b) Its expenses attributable to such income and incurred within the year.

(c) Its disbursements out of income (including prior years' accumulations) made within the year for the purposes for which it is exempt. Information shall be included as to the class of activity with a separate total for each activity as well as the name, address, and amount received by each individual or organization receiving cash, other property, or services within the taxable year. If the donee is related by blood, marriage, adoption, or employment (including children of employees) to any person or corporation having an interest in the exempt organization, such as a creator, donor, director, trustee, or officer, the relationship of the donee shall be stated. Activities shall be classified according to purpose in greater detail than merely charitable, educational, religious, or scientific. For example, payments for

nursing service, for laboratory construction, for fellowships, or for assistance to indigent families shall be so identified. Where the fair market value of the property at the time of disbursement is used as the measure of the disbursement, the book value of such property (and a statement of how book value was determined) shall also be furnished, and any difference between the fair market value at the time of disbursement and the book value should be reflected in the books of account. The expenses allocable to making the disbursements shall be set forth in such detail as is prescribed by the form or instructions.

(d) Its accumulation of income within the year. The amount of such accumulation is obtained by subtracting from the amount in *(a)* of this subdivision the sum of the amounts determined in *(b)* and *(c)* of this subdivision and the expenses allocable to carrying out the purposes for which it is exempt.

(e) Its aggregate accumulation of income at the beginning and end of the year. The aggregate accumulation of income shall be divided between that which is attributable to the gain or loss on the sale of assets (excluding inventory items) and that which is attributable to all other income. For this purpose expenses and disbursements shall be allocated on the basis of accounting records, the governing instrument, or applicable local law.

(f) Its disbursements out of principal in the current and prior years for the purposes for which it is exempt. In addition, the same type of information shall be required with respect to disbursements out of principal made in the current year as is prescribed by *(c)* of this subdivision with respect to disbursements out of income.

(g) A balance sheet showing its assets, liabilities, and net worth as of the beginning and end of such year. Detailed information on the assets, liabilities, and net worth shall be furnished on the schedule provided for this purpose on the Form 990–A. Such schedule shall be supplemented by attachments where appropriate.

(h) The total of the contributions and gifts received by it during the year. A statement shall be included showing the gross amount of contributions and gifts collected by the organization, the expenses incurred by the organization in collecting such amount, and the net proceeds.

(i) In addition to the information required in *(a)* through *(h)* of this subdivision, the organization shall furnish such specific information and answer such specific questions as are required by the form or instructions.

(ii) Form 990–A (SF) is a short form consisting of a single part which contains such information as may be prescribed in the return and instructions which is required to be furnished by section 6033(a) or which is necessary to show whether or not such organization is exempt from tax under section 501(a). In addition, Form 990–A (SF) shall contain the information required by section 6033(b) which must be furnished in the manner prescribed in the instructions issued with respect to the return. Form 990–A (SF) shall be open to public inspection pursuant to section 6104 and other applicable sections and the regulations thereunder.

(5)(i) Every religious or apostolic association or corporation described in section 501 (d) which is exempt from taxation under section 501(a) shall file a return on Form 1065 for each taxable year, stating specifically the items of gross income and deductions, and its taxable income. There shall be attached to the return as a part thereof a statement showing the name and address of each member of the association or corporation and the amount of his distributive share of the taxable income of the association or corporation for such year.

(ii) If the taxable year of any member is different from the taxable year of the association or corporation, the distributive share of the taxable income of the association or corporation to be included in the gross income of the member for his taxable year shall be based upon the taxable income of the association or corporation for its taxable year ending with or within the taxable year of the member.

(b) *Accounting period for filing return.* A return on Form 990, 990–A, 990 (SF), 990–A (SF), or 990–P shall be on the basis of the established annual accounting period of the organization. If

the organization has no such established accounting period, such return shall be on the basis of the calendar year.

(c) *Returns when exempt status not established*. An information return on Form 990, 990–A, 990 (SF), or 990–A (SF) is not required to be filed by an organization claiming an exempt status under section 501(a) prior to the establishment by the organization of such exempt status under section 501 and § 1.501(a)–1. If the date for filing an income tax return and paying the tax occurs before the tax-exempt status of the organization has been established, the organization is required to file the income tax return and pay the tax. However, see sections 6081 and 6161 and the regulations thereunder for extensions of time for filing the return and paying the tax. Upon establishment of its exempt status, the organization may file a claim for a refund of income taxes paid for the period for which its exempt status is established.

(d) *Group returns*. (1) A central, parent, or like organization (referred to in this paragraph as ''central organization''), exempt under section 501(a) and described in section 501(c), although required to file a separate annual return for itself under section 6033 and paragraph (a) of this section, may file annually, in addition to such separate annual return, a group return on Form 990 or 990–A, 990 (SF), or 990–A (SF), as may be appropriate. Form 990 (SF) or 990–A (SF) may be used where each local organization qualifies under paragraph (a) of this section. Such group return may be filed for two or more of the local organizations, chapters, or the like (referred to in this paragraph as ''local organizations'') which are (i) affiliated with such central organization at the close of its annual accounting period, (ii) subject to the general supervision or control of the central organization, and (iii) exempt from taxation under the same paragraph of section 501(c) of the Code, although the local organizations are not necessarily exempt under the paragraph under which the central organization is exempt.

(2)(i) The filing of the group return shall be in lieu of the filing of a separate return by each of the local organizations included in the group return. The group return shall include only those local organizations which in writing have authorized the central organization to include them in the group return, and which have made and filed, with the central organization, their statements, specifically stating their items of gross income, receipts, and disbursements, and such other information relating to them as is required to be stated in the group return. Such an authorization by a local organization shall be made annually, under the penalties of perjury, and shall be signed by a duly authorized officer of the local organization in his official capacity and shall contain the following statement, or a statement of like import: ''I hereby declare under the penalties of perjury that this authorization (including any accompanying schedules and statements) has been examined by me and to the best of my knowledge and belief is true, correct and complete and made in good faith for the taxable year stated.'' Such authorizations and statements shall be permanently retained by the central organization.

(ii) There shall be attached to the group return and made a part thereof a schedule showing the name and address of each of the local organizations and the total number thereof included in such return, and a schedule showing the name and address of each of the local organizations and the total number thereof not included in the group return.

(3) The group return shall be on the basis of the established annual accounting period of the central organization. Where such central organization has no established annual accounting period, such return shall be on the basis of the calendar year. The same income, receipts, and disbursements of a local organization shall not be included in more than one group return.

(4) The group return shall be filed in accordance with these regulations and the instructions issued with respect to Form 990, 990–A, 990 (SF), or 990–A (SF), whichever is appropriate, and shall be considered the return of each local organization included therein. The tax-exempt status of a local organization

must be established under a group exemption letter issued to the central organization before a group return including the local organization will be considered as the return of the local organization. See §1.501(a)–1 for requirements for establishing a tax-exempt status.

(e) *Time and place for filing.* The annual return of information on Form 990, 990–A, 990 (SF), 990–A (SF), or 990–P shall be filed on or before the 15th day of the fifth calendar month following the close of the period for which the return is required to be filed. The annual return on Form 1065 required to be filed by a religious or apostolic association or corporation shall be filed on or before the 15th day of the fourth month following the close of the taxable year for which the return is required to be filed. Each such return shall be filed in accordance with the instructions applicable thereto.

(f) *Penalties.* For criminal penalties for failure to file a return and filing a false or fraudulent return, see sections 7203, 7206, and 7207.

(g) *Organizations not required to file annual returns.* (1) (i) Annual returns on Form 990–A or Form 990–A (SF) are not required to be filed by an organization described in section 501 (c) (3) which has established its right to exemption from taxation under section 501 (a) and which is:

(a) Organized and operated exclusively for religious purposes;

(b) Operated, supervised, or controlled by or in connection with an organization which is organized and operated exclusively for religious purposes;

(c) An educational organization which normally maintains a regular faculty and curriculum and normally has a regularly organized body of pupils or students in attendance at the place where its educational activities are regularly carried on; or

(d) A charitable organization, or an organization for the prevention of cruelty to children or animals, which is supported, in whole or in part, by funds contributed by the United States or any State or political subdivision thereof, or which is primarily supported by contributions of the general public.

(ii) An educational organization which normally maintains and has a regular faculty, curriculum, and student body and meets the conditions of subdivision (i)*(c)* of this subparagraph, which relieves it from the requirement of filing annual returns, shall not be considered as having thereafter failed to continue meeting such conditions if it is temporarily compelled to curtail or discontinue its normal and regular activities during the existence of abnormal circumstances and conditions.

(iii) An organization organized and operated exclusively for charitable purposes or for the prevention of cruelty to children or animals is ''primarily supported by contributions of the general public'' for any accounting period if more than 50 percent of its income and receipts for such period is actually derived from voluntary contributions and gifts made by the general public, as distinguished from a few contributors or donors or from related or associated persons. For purposes of this subdivision, the words ''related or associated persons'' refer to persons of a particular group who are connected with or are interested in the activities of the organization, such as founders, incorporators, shareholders, members, fiduciaries, officers, employees, or the like, or who are connected with such persons by family or business relationships. An organization claiming an exception from the filing of an information return under this subdivision must maintain adequate records in order to substantiate such claim. Furthermore, if it is doubtful to an organization that it falls within this exception for filing annual information returns, it must file the return on Form 990–A or Form 990–A (SF).

(2) The annual return on Form 990 or Form 990 (SF) need not be filed by:

(i) A fraternal beneficiary society, order, or association, described in section 501(c)(8), or

(ii) An organization described in section 501(c)(1) if it is a corporation wholly owned by the United States or any agency or instrumentality thereof, or is a wholly owned subsidiary of such a corporation,

which has established its exemption from tax under section 501(a).

(3) The provisions of section 6033(a) relieving certain specified types of organizations exempt from tax under section 501(a) from filing annual returns do not abridge or impair in any way the powers and authority of district directors or directors of service centers provided for in other provisions of the Code and in the regulations thereunder to require the filing of such returns by such organizations. See section 6001 and § 1.6001–1.

(h) *Records, statements, and other returns of tax-exempt organizations.* (1) An organization which has established its right to exemption from tax under section 501(a) and has also established that it is not required to file annually the return of information on Form 990, 990–A, 990 (SF), or 990–A (SF) shall immediately notify in writing the district director for the internal revenue district in which its principal office is located of any changes in its character, operations, or purpose for which it was originally created.

(2) Every organization which has established its right to exemption from tax, whether or not it is required to file an annual return of information, shall submit such additional information as may be required by the district director for the purpose of enabling him to inquire further into its exempt status and to administer the provisions of subchapter F (section 501 and following), chapter 1 of the Code, and of section 6033. See section 6001 and § 1.6001–1 with respect to the authority of the district director or directors of service centers to require such additional information and with respect to the permanent books of account or records to be kept by such organizations.

(3) An organization which has established its right to exemption from tax under section 501(a), including an organization which is relieved under section 6033 and this section from filing annual returns of information, is not, however, relieved from the duty of filing other returns of information. See, for example, sections 6041 and 6051 and the regulations thereunder.

(i) *Unrelated business tax returns.* In addition to the foregoing requirements of this section, certain organizations otherwise exempt from tax under section 501(a) and described in section 501(c) (2), (3), (5), (6), or (17) or section 401(a) which are subject to tax on unrelated business taxable income are also required to file returns on Form 990–T. See paragraph (e) of § 1.6012–2 and paragraph (a)(5) of § 1.6012–3 for requirements with respect to such returns.

(j) *Effective date.* The provisions of this section shall apply with respect to returns filed for taxable years beginning before January 1, 1970.

[T.D. 6500, 25 FR 12108, Nov. 26, 1960, as amended by T.D. 6722, 29 FR 5075, Apr. 14, 1964; T.D. 6972, 33 FR 12907, Sept. 12, 1968; T.D. 6980, 33 FR 16446, Nov. 9, 1968; T.D. 7122, 36 FR 11026, June 8, 1971]

§ 1.6033–2 Returns by exempt organizations (taxable years beginning after December 31, 1969) and returns by certain nonexempt organizations (taxable years beginning after December 31, 1980).

(a) *In general.* (1) Except as provided in section 6033(a)(2) and paragraph (g) of this section, every organization exempt from taxation under section 501(a) shall file an annual information return specifically setting forth its items of gross income, gross receipts and disbursements, and such other information as may be prescribed in the instructions issued with respect to the return. Except as provided in paragraph (d) of this section, such return shall be filed annually regardless of whether such organization is chartered by, or affiliated or associated with, any central, parent, or other organization.

(2)(i) Except as otherwise provided in this paragraph and paragraph (g) of this section, every organization exempt from taxation under section 501(a), and required to file a return under section 6033 and this section (including, for taxable years ending before December 31, 1972, private foundations, as defined in section 509(a)), other than an organization described in section 401(a) or 501(d), shall file its annual return on Form 990. For taxable years ending on or after December 31, 1972, every private foundation shall file Form 990–PF as its annual information return. For taxable years beginning after December 31, 1977, every section 501(c)(21) black lung trust shall file an annual information return on Form 990–BL or

any other form prescribed by the Internal Revenue Service for that purpose.

(ii) The information generally required to be furnished by an organization exempt under section 501(a) is:

(a) Its gross income for the year. For this purpose, gross income includes tax-exempt income, but does not include contributions, gifts, grants, and similar amounts received. Whether an item constitutes a contribution, gift, grant, or similar amount depends upon all the surrounding facts and circumstances. The computation of gross income shall be made by subtracting the cost of goods sold from all receipts other than gross contributions, gifts, grants, and similar amounts received and nonincludible dues and assessments from members and affiliates.

(b) To the extent not included in gross income, its dues and assessments from members and affiliates for the year.

(c) Its expenses incurred within the year attributable to gross income.

(d) Its disbursements (including prior years' accumulations) made within the year for the purposes for which it is exempt.

(e) A balance sheet showing its assets, liabilities, and net worth as of the beginning and end of such year. Detailed information relating to the assets, liabilities, and net worth shall be furnished on the schedule provided for this purpose on the return required by this section. Such schedule shall be supplemented by attachments where appropriate.

(f) The total of the contributions, gifts, grants and similar amounts received by it during the taxable year, and the names and addresses of all persons who contributed, bequeathed, or devised $5,000 or more (in money or other property) during the taxable year. In the case of a private foundation (as defined in section 509(a)), the names and addresses of all persons who became substantial contributors (as defined in section 507(d)(2)) during the taxable year shall be furnished. In addition, for its first taxable year beginning after December 31, 1969, each private foundation shall furnish the names and addresses of all persons who became substantial contributors before such taxable year. For special rules with respect to contributors and donors, see subdivision (iii) of this subparagraph.

(g) The names and addresses of all officers, directors, or trustees (or any person having responsibilities or powers similar to those of officers, directors, or trustees) of the organization, and, in the case of a private foundation, all persons who are foundation managers, within the meaning of section 4946(b)(1). Organizations described in section 501(c)(3) must also attach a schedule showing the names and addresses of the five employees (if any) who received the greatest amount of annual compensation in excess of $30,000; the total number of other employees who received annual compensation in excess of $30,000; the names and addresses of the five independent contractors (if any) who performed personal services of a professional nature for the organization (such as attorneys, accountants, and doctors, whether such services are performed by such persons in their individual capacity or as employees of a professional service corporation) and who received the greatest amount of compensation in excess of $30,000 from the organization for the year for the performance of such services; and the total number of other such independent contractors who received in excess of $30,000 for the year for the performance of such services.

(h) A schedule showing the compensation and other payments made during the organization's annual accounting period (or during the calendar year ending within such period) which are includible in the gross income of each individual whose name is required to be listed in *(g)* of this subdivision.

(i) For any taxable year ending on or after December 31, 1971, such information as is required by Forms 4848 and 4849 and, only with respect to any such taxable year ending before December 31, 1972, such information as is required by Form 2950. Such forms are required by this section to be filed by an organization exempt from tax under section 501(a) which is an employer who maintains a funded pension or annuity plan for its employees. See paragraph (g) of this section for exceptions from filing. Form 4849 need not be filed by the organization if the fiduciary for the plan

has given written notification to the organization that such form will be filed as an attachment to Form 990–P filed by the fiduciary. Form 4848 (and Form 4849 if required to be filed by the organization) shall be filed as a separate return on or before the due date for Form 990. For rules relating to the extension of time for filing, see section 6081 and the regulations thereunder and the instructions for Form 4848. A central organization which files Form 990 as a group return under paragraph (d) of this section may also file Form 4848 as a group return. The rules provided by paragraph (d) of this section with respect to a group return filed on Form 990 shall apply to a group return filed on Form 4848. Unless otherwise expressly provided therein, an authorization to include a local organization in a group for purposes of filing Form 990 as a group return shall be treated as an authorization to include such local organization in a group for purposes of filing Form 4848 as a group return. A group return on Form 4848 shall be filed in accordance with this section and the instructions to Form 4848 and shall be considered the return of each local organization included therein. In addition to the information required to be furnished by Forms 4848 and 4849, the district director may require any further information that he considers necessary to determine qualification of the plan under section 401 or the taxability under section 403(b) of a beneficiary under an annuity purchased by a section 501(c)(3) organization.

(*j*) In the case of a private foundation liable for tax imposed under chapter 42, such information as is required by Form 4720.

(*k*) Its lobbying expenditures, grass roots expenditures, exempt purpose expenditures, lobbying nontaxable amount, and grass roots nontaxable amount for the taxable year and for prior taxable years that are base years (within the meaning of § 1.501(h)–3(c)(7)), if the organization has an election under section 501(h) in effect for the taxable year. An organization that is a member of an affiliated group of organizations (as defined in § 56.4911–7(e)) but that is not a member of a limited affiliated group (as defined in § 56.4911–10(b)) shall report this information based on the expenditures of all members of the group during the taxable year of the group that ends with or within the member's taxable year and for prior taxable years of the group that are base years (within the meaning of § 56.4911–9(b)). For additional information required to be furnished by members of an affiliated group of organizations, and by controlling members in a limited affiliated group, see §§ 56.4911–9(d) and 56.4911–10(f)(1), respectively.

(iii) *Special rules.* In providing the names and addresses of contributors and donors under subdivision (ii)*(f)* of this subparagraph:

(a) An organization described in section 501(c)(3) which meets the 33⅓ percent-of-support test of the regulations under section 170(b)(1)(A)(vi) (without regard to whether such organization otherwise qualifies as an organization described in section 170(b)(1)(A)) is required to provide the name and address of a person who contributed, bequeathed, or devised $5,000 or more during the year only if his amount is in excess of 2 percent of the total contributions, bequests and devises received by the organization during the year.

(b) An organization other than a private foundation is required to report only the names and addresses of contributors of whom it has actual knowledge. For instance, an organization need not require an employer who withholds contributions from the compensation of employees and pays over to the organization periodically the total amounts withheld, to specify the amounts paid over with respect to a particular employee. In such case, unless the organization has actual knowledge that a particular employee gave more than $5,000 (and in excess of 2 percent if *(a)* of this subdivision is applicable), the organization need report only the name and address of the employer, and the total amount paid over by him.

(c) Separate and independent gifts made by one person in a particular year need be aggregated to determine if his contributions and bequests exceed $5,000 (and in excess of 2 percent if *(a)* of this subdivision is applicable), only if such gifts are of $1,000 or more.

(d)(1) Organizations described in section 501(c) (8) or (10) (and, for taxable years beginning after December 31, 1970, organizations described in section 501(c)(7)) that receive contributions or bequests to be used exclusively for purposes described in section 170(c)(4), 2055(a)(3), or 2522(a)(3), must attach a schedule with respect to all gifts which aggregate more than $1,000 from any one person showing the name of the donor, the amount of the contribution or bequest, the specific purpose for which such amount was received, and the specific use to which such amount was put. In the case of an amount set aside for such purposes, the organization shall indicate the manner in which such amount is held (for instance, whether such amount is commingled with amounts held for other purposes). If the contribution or bequest was transferred to another organization, the schedule must include the name of the transferee organization, a description of the nature of such organization, and a description of the relationship between the transferee and transferor organizations.

(2) For taxable years beginning after December 31, 1970, such organizations must also attach a statement showing the total dollar amount of contributions and bequests received for such purposes which are $1,000 or less.

(iv) *Listing of States.* A private foundation is required to attach to its return required by this section a list of all States:

(a) To which the organization reports in any fashion concerning its organization, assets, or activities, or

(b) With which the organization has registered (or which it has otherwise notified in any manner) that it intends to be, or is, a charitable organization or a holder of property devoted to a charitable purpose.

(3)(i) For taxable years beginning after December 31, 1969, and ending before December 31, 1971, every employee's trust described in section 401(a) which is exempt from taxation under section 501(a) shall file an annual return on Form 990–P. The return shall include the information required by paragraph (b)(5)(ii) of § 1.401–1. For such years, in addition, the trust must file the information required to be filed by the employer pursuant to the provisions of § 1.404(a)–2, unless the employer has notified the trustee in writing that he has filed or will timely file such information. If the trustee has received such notification from the employer, then such notification, or a copy thereof, shall be retained by the trust as a part of its records.

(ii) For taxable years ending on or after December 31, 1971, and before December 31, 1975, every employee's trust described in section 401(a) which is exempt from taxation under section 501(a) shall file an annual return on Form 990–P. The trust shall furnish such information as is required by such form and the instructions issued with respect thereto.

(4) For taxable years beginning after December 31, 1980, trusts described in section 4947(a)(1) and nonexempt private foundations shall comply with the requirements of section 6033 and this section in the same manner as organizations described in section 501(c)(3) which are exempt from tax under section 501(a). This section shall be applied for taxable years beginning after December 31, 1980 as if trusts described in section 4947(a)(1) and nonexempt private foundations were described in section 501(c)(3). Therefore, for purposes of this section, all references to exempt organizations shall include section 4947(a)(1) trusts and nonexempt private foundations and all references to private foundations shall include section 4947(a)(1) trusts that would be private foundations if they were described in section 501(c)(3) and all nonexempt private foundations. Similarly, for purposes of paragraph (a)(2)(ii)(d), the purposes for which a section 4947(a)(1) trust or a nonexempt private foundation is organized shall be treated as the purposes for which it is exempt. For purposes of this section, the term ''nonexempt private foundation'' means a taxable organization (other than a section 4947(a)(1) trust) that is a private foundation. See section 509(b) and § 1.509(b)–1. See also section 642(c)(6) and § 1.642(c)–4.

(b) *Accounting period for filing return.* A return required by this section shall be on the basis of the established annual accounting period of the organization. If the organization has no such

established accounting period, such return shall be on the basis of the calendar year.

(c) *Returns when exempt status not established.* An organization claiming an exempt status under section 501(a) prior to the establishment of such exempt status under section 501 and §1.501(a)–1, shall file a return required by this section in accordance with the instructions applicable thereto. In such case the organization must indicate on such return that it is being filed in the belief that the organization is exempt under section 501(a), but that the Internal Revenue Service has not yet recognized such exemption.

(d) *Group returns.* (1) A central, parent, or like organization (referred to in this paragraph as ''central organization''), exempt under section 501(a) and described in section 501(c) (other than a private foundation), although required to file a separate annual return for itself under section 6033 and paragraph (a) of this section, may file annually, in addition to such separate annual return, a group return on Form 990. Such group return may be filed for two or more of the local organizations, chapters, or the like (referred to in this paragraph as ''local organizations'') which are (i) affiliated with such central organization at the close of its annual accounting period, (ii) subject to the general supervision or control of the central organization, and (iii) exempt from taxation under the same paragraph of section 501(c) of the Code, although the local organizations are not necessarily exempt under the paragraph under which the central organization is exempt. Such group return may not be filed for a local organization which is a private foundation.

(2)(i) The filing of the group return shall be in lieu of the filing of a separate return by each of the local organizations included in the group return. The group return shall include only those local organizations which in writing have authorized the central organization to include them in the group return, and which have made and filed, with the central organization, their statements, specifically stating their items of gross income, receipts, and disbursements, and such other information relating to them as is required to be stated in the group return. Such an authorization and statement by a local organization shall be made under the penalties of perjury, shall be signed by a duly authorized officer of the local organization in his official capacity, and shall contain the following statement, or a statement of like import: ''I hereby declare under the penalties of perjury that this authorization (including any accompanying schedules and statements) has been examined by me and to the best of my knowledge and belief is true, correct and complete and made in good faith.'' Such authorization and statement with respect to a local organization shall be retained by the central organization until the expiration of 6 years after the last taxable year for which a group return filed by such central organization includes such local organization.

(ii) There shall be attached to the group return and made a part thereof a schedule showing the name, address, and employer identification number of each of the local organizations and the total number thereof included in such return, and a schedule showing the name, address, and employer identification number of each of the local organizations and the total number thereof not included in the group return.

(3) The group return shall be on the basis of the established annual accounting period of the central organization. Where such central organization has no established annual accounting period, such return shall be on the basis of the calendar year. The same income, receipts, and disbursements of a local organization shall not be included in more than one group return.

(4) The group return shall be filed in accordance with these regulations and the instructions issued with respect to Form 990, and shall be considered the return of each local organization included therein. The tax exempt status of a local organization must be established under a group exemption letter issued to the central organization before a group return including the local organization will be considered as the return of the local organization. See §1.501(a)–1 for requirements for establishing a tax-exempt status.

(5) In providing the information required by paragraph (a)(2)(ii) *(f), (g),* and *(h)* of this section, such information may be provided:

(i) With respect to the central or parent organization on its Form 990, and with respect to the local organizations on separate schedules attached to the group return for the year, or

(ii) On a consolidated basis for all the local organizations and the central or parent organization on the group return.

Such information need be provided only with respect to those local organizations which are not excepted from filing under the provisions of paragraph (g) of this section. A central or parent organization shall indicate whether it has provided such information in the manner described in subdivision (i) or in subdivision (ii) of this subparagraph, and may not change the manner in which it provides such information without the consent of the Commissioner.

(e) *Time and place for filing.* The annual return required by this section shall be filed on or before the 15th day of the fifth calendar month following the close of the period for which the return is required to be filed. The annual return on Form 1065 required to be filed by a religious or apostolic association or corporation shall be filed on or before the 15th day of the fourth month following the close of the taxable year for which the return is required to be filed. Each such return shall be filed in accordance with the instructions applicable thereto.

(f) *Penalties and additions to tax.* For penalties and additions to tax for failure to file a return and filing a false or fraudulent return, see sections 6652, 7203, 7206, and 7207.

(g) *Organizations not required to file annual returns.* (1) Annual returns required by this section are not required to be filed by an organization exempt from taxation under section 501(a) which is:

(i) A church, an interchurch organization of local units of a church, a convention or association of churches, or an integrated auxiliary of a church (as defined in paragraph (h) of this section);

(ii) An exclusively religious activity of any religious order;

(iii) An organization (other than a private foundation) the gross receipts of which in each taxable year are normally not more than $5,000 (as described in subparagraph (3) of this paragraph);

(iv) A mission society sponsored by or affiliated with one or more churches or church denominations, more than one-half of the activities of which society are conducted in, or directed at persons in foreign countries;

(v) A State institution, the income of which is excluded from gross income under section 115(a);

(vi) An organization described in section 501(c)(1); or

(vii) An educational organization (below college level) that is described in section 170(b)(1)(A)(ii), that has a program of a general academic nature, and that is affiliated (within the meaning of paragraph (h)(2) of this section) with a church or operated by a religious order.

(2) The provisions of section 6033(a) relieving certain specified types of organizations exempt from taxation under section 501(a) from filing annual returns do not abridge or impair in any way the powers and authority of district directors or directors of service centers provided for in other provisions of the Code and in regulations thereunder to require the filing of returns or notices by such organizations. See section 6001 and § 1.6001–1.

(3) For purposes of subparagraph (1)(iii) of this paragraph, the gross receipts (as defined in subparagraph (4) of this paragraph) of an organization are normally not more than $5,000 if:

(i) In the case of an organization which has been in existence for 1 year or less, the organization has received, or donors have pledged to give, gross receipts of $7,500 or less during the first taxable year of the organization,

(ii) In the case of an organization which has been in existence for more than one but less than 3 years, the average of the gross receipts received by the organization in its first 2 taxable years is $6,000 or less, and

(iii) In the case of an organization which has been in existence for 3 years

or more, the average of the gross receipts received by the organization in the immediately preceding 3 taxable years, including the year for which the return would be required to be filed, is $5,000 or less.

(4) For purposes of this paragraph and paragraph (a)(2) of this section, ''gross receipts'' means the gross amount received by the organization during its annual accounting period from all sources without reduction for any costs or expenses including, for example, cost of goods or assets sold, cost of operations, or expenses of earning, raising, or collecting such amounts. Thus ''gross receipts'' includes, but is not limited to (i) the gross amount received as contributions, gifts, grants, and similar amounts without reduction for the expenses of raising and collecting such amounts, (ii) the gross amount received as dues or assessments from members or affiliated organizations without reduction for expenses attributable to the receipt of such amounts, (iii) gross sales or receipts from business activities (including business activities unrelated to the purpose for which the organization qualifies for exemption, the net income or loss from which may be required to be reported on Form 990–T), (iv) the gross amount received from the sale of assets without reduction for cost or other basis and expenses of sale, and (v) the gross amount received as investment income, such as interest, dividends, rents, and royalties.

(5) [Reserved]

(6) The Commissioner may relieve any organization or class of organizations from filing, in whole or in part, the annual return required by this section where he determines that such returns are not necessary for the efficient administration of the internal revenue laws.

(h) *Integrated auxiliary*—(1) *In general.* For purposes of this title, the *term integrated auxiliary of a church* means an organization that is—

(i) Described both in sections 501(c)(3) and 509(a) (1), (2), or (3);

(ii) Affiliated with a church or a convention or association of churches; and

(iii) Internally supported.

(2) *Affiliation.* An organization is affiliated with a church or a convention or association of churches, for purposes of paragraph (h)(1)(ii) of this section, if—

(i) The organization is covered by a group exemption letter issued under applicable administrative procedures, (such as Rev. Proc. 80–27 (1980–1 C.B. 677); See §601.601(a)(2)(ii)(*b*)), to a church or a convention or association of churches;

(ii) The organization is operated, supervised, or controlled by or in connection with (as defined in §1.509(a)–4) a church or a convention or association of churches; or

(iii) Relevant facts and circumstances show that it is so affiliated.

(3) *Facts and circumstances.* For purposes of paragraph (h)(2)(iii) of this section, relevant facts and circumstances that indicate an organization is affiliated with a church or a convention or association of churches include the following factors. However, the absence of one or more of the following factors does not necessarily preclude classification of an organization as being affiliated with a church or a convention or association of churches—

(i) The organization's enabling instrument (corporate charter, trust instrument, articles of association, constitution or similar document) or bylaws affirm that the organization shares common religious doctrines, principles, disciplines, or practices with a church or a convention or association of churches;

(ii) A church or a convention or association of churches has the authority to appoint or remove, or to control the appointment or removal of, at least one of the organization's officers or directors;

(iii) The corporate name of the organization indicates an institutional relationship with a church or a convention or association of churches;

(iv) The organization reports at least annually on its financial and general operations to a church or a convention or association of churches;

(v) An institutional relationship between the organization and a church or a convention or association of churches is affirmed by the church, or convention or association of churches, or a designee thereof; and

(vi) In the event of dissolution, the organization's assets are required to be distributed to a church or a convention or association of churches, or to an affiliate thereof within the meaning of this paragraph (h).

(4) *Internal support.* An organization is internally supported, for purposes of paragraph (h)(1)(iii) of this section, unless it both—

(i) Offers admissions, goods, services or facilities for sale, other than on an incidental basis, to the general public (except goods, services, or facilities sold at a nominal charge or for an insubstantial portion of the cost); and

(ii) Normally receives more than 50 percent of its support from a combination of governmental sources, public solicitation of contributions, and receipts from the sale of admissions, goods, performance of services, or furnishing of facilities in activities that are not unrelated trades or businesses.

(5) *Special rule.* Men's and women's organizations, seminaries, mission societies, and youth groups that satisfy paragraphs (h)(1) (i) and (ii) of this section are integrated auxiliaries of a church regardless of whether such an organization meets the internal support requirement under paragraph (h)(1)(iii) of this section.

(6) *Effective date.* This paragraph (h) applies for returns filed for taxable years beginning after December 31, 1969. For returns filed for taxable years beginning after December 31, 1969 but beginning before December 20, 1995, the definition for the term *integrated auxiliary of a church* set forth in § 1.6033–2(g)(5) (as contained in the 26 CFR edition revised as of April 1, 1995) may be used as an alternative definition to such term set forth in this paragraph (h).

(7) *Examples of internal support.* The internal support test of this paragraph (h) is illustrated by the following examples, in each of which it is assumed that the organization's provision of goods and services does not constitute an unrelated trade or business:

Example 1. Organization A is described in sections 501(c)(3) and 509(a)(2) and is affiliated (within the meaning of this paragraph (h)) with a church. Organization A publishes a weekly newspaper as its only activity. On an incidental basis, some copies of Organization A's publication are sold to nonmembers of the church with which it is affiliated. Organization A advertises for subscriptions at places of worship of the church. Organization A is internally supported, regardless of its sources of financial support, because it does not offer admissions, goods, services, or facilities for sale, other than on an incidental basis, to the general public. Organization A is an integrated auxiliary.

Example 2. Organization B is a retirement home described in sections 501(c)(3) and 509(a)(2). Organization B is affiliated (within the meaning of this paragraph (h)) with a church. Admission to Organization B is open to all members of the community for a fee. Organization B advertises in publications of general distribution appealing to the elderly and maintains its name on non-denominational listings of available retirement homes. Therefore, Organization B offers its services for sale to the general public on more than an incidental basis. Organization B receives a cash contribution of $50,000 annually from the church. Fees received by Organization B from its residents total $100,000 annually. Organization B does not receive any government support or contributions from the general public. Total support is $150,000 ($100,000 + $50,000), and $100,000 of that total is from receipts from the performance of services (66⅔% of total support). Therefore, Organization B receives more than 50 percent of its support from receipts from the performance of services. Organization B is not internally supported and is not an integrated auxiliary.

Example 3. Organization C is a hospital that is described in sections 501(c)(3) and 509(a)(1). Organization C is affiliated (within the meaning of this paragraph (h)) with a church. Organization C is open to all persons in need of hospital care in the community, although most of Organization C's patients are members of the same denomination as the church with which Organization C is affiliated. Organization C maintains its name on hospital listings used by the general public, and participating doctors are allowed to admit all patients. Therefore, Organization C offers its services for sale to the general public on more than an incidental basis. Organization C annually receives $250,000 in support from the church, $1,000,000 in payments from patients and third party payors (including Medicare, Medicaid and other insurers) for patient care, $100,000 in contributions from the public, $100,000 in grants from the federal government (other than Medicare and Medicaid payments) and $50,000 in investment income. Total support is $1,500,000 ($250,000 + $1,000,000 + $100,000 + $100,000 + $50,000), and $1,200,000 ($1,000,000 + $100,000 + $100,000) of that total is support from receipts from the performance of services, government sources, and public contributions (80% of

total support). Therefore, Organization C receives more than 50 percent of its support from receipts from the performance of services, government sources, and public contributions. Organization C is not internally supported and is not an integrated auxiliary.

(i) *Records, statements, and other returns of tax-exempt organizations.* (1) An organization which is exempt from taxation under section 501(a) and is not required to file annually an information return required by this section shall immediately notify in writing the district director for the internal revenue district in which its principal office is located of any changes in its character, operations, or purpose for which it was originally created.

(2) Every organization which is exempt from tax, whether or not it is required to file an annual information return, shall submit such additional information as may be required by the Internal Revenue Service for the purpose of inquiring into its exempt status and administering the provisions of subchapter F (section 501 and following), chapter 1 of subtitle A of the Code, section 6033, and chapter 42 of subtitle D of the Code. See section 6001 and §1.6001–1 with respect to the authority of the district directors or directors of service centers to require such additional information and with respect to the books of account or records to be kept by such organizations.

(3) An organization which has established its exemption from taxation under section 501(a), including an organization which is relieved under section 6033 and this section from filing annual returns of information, is not relieved of the duty of filing other returns of information. See, for example, sections 6041, 6043, 6051, 6057, and 6058 and the regulations thereunder.

(j) *Unrelated business tax returns.* In addition to the foregoing requirements of this section, certain organizations otherwise exempt from tax under section 501(a) which are subject to tax on unrelated business taxable income are also required to file returns on Form 990–T. See paragraph (e) of §1.6012–2 and paragraph (a)(5) of §1.6012–3 for requirements with respect to such returns.

(k) *Effective date.* The provisions of this section shall apply with respect to returns filed for taxable years beginning after December 31, 1969.

[T.D. 7122, 36 FR 11026, June 8, 1971; 36 FR 11730, June 18, 1971]

EDITORIAL NOTE: For FEDERAL REGISTER citations affecting §1.6033–2, see the List of Sections Affected in the Finding Aids section of this volume.

§1.6033–3 Additional provisions relating to private foundations.

(a) *In general.* The foundation managers (as defined in section 4946(b)) of every organization (including a trust described in section 4947(a)(1)) which is (or is treated as) a private foundation (as defined in section 509) the assets of which are at least $5,000 at any time during a taxable year shall include the following information on its annual return in addition to that information required under §1.6033–2(a):

(1) An itemized statement of its securities and all other assets at the close of the year, showing both book and market value,

(2) An itemized list of all grants and contributions made or approved for future payment during the year, showing the amount of each such grant or contribution, the name and address of the recipient (other than a recipient who is not a disqualified person and who receives, from the foundation, grants to indigent or needy persons that, in the aggregate, do not exceed $1,000 during the year), any relationship between any individual recipient and the foundation's managers or substantial contributors, and a concise statement of the purpose of each such grant or contribution,

(3) The address of the principal office of the foundation and (if different) of the place where its books and records are maintained,

(4) The names and addresses of its foundation managers (within the meaning of section 4946(b)), that are substantial contributors (within the meaning of section 507(d)(2)) or that own 10 percent or more of the stock of any corporation of which the foundation owns 10 percent or more of the stock, or corresponding interests in partnerships or other entities, in which the

foundation has a 10 percent or greater interest.

For purposes of subparagraph (2) of this paragraph, the business address of an individual grant recipient or foundation manager may be used by the foundation in its annual return in lieu of the home address of such recipient or manager, and the term ''relationship'' shall include, but is not limited to, any case in which an individual recipient of a grant or contribution by a private foundation is (i) a member of the family (as defined in section 4946(d)) of a substantial contributor or foundation manager of such foundation, (ii) a partner of such substantial contributor or foundation manager, or (iii) an employee of such substantial contributor or foundation manager or of an organization which is effectively controlled (within the meaning of section 4946(a)(1)(H)(i) and the regulations thereunder), directly or indirectly, by one or more such substantial contributors or foundation managers.

(b) *Notice to public of availability of annual return.* A copy of the notice required by section 6104(d) (relating to public inspection of private foundations' annual returns), and proof of publication thereof, shall be filed with the annual return required by § 1.6033–2(a). A copy of such notice as published, and a statement signed by a foundation manager stating that such notice was published, setting forth the date of publication and the publication in which it appeared, shall be sufficient proof of publication for purposes of this paragraph.

(c) *Special rules*—(1) *Furnishing of copies to State officers.* The foundation managers of a private foundation shall furnish a copy of the annual return required by section 6033 and § 1.6033–2 to the Attorney General of:

(i) Each State which the foundation is required to list on its return pursuant to § 1.6033–2(a)(2)(iv),

(ii) The State in which is located the principal office of the foundation, and

(iii) The State in which the foundation was incorporated or created.

The annual return shall be sent to each Attorney General described in paragraphs (c)(1) (i), (ii), or (iii) of this section at the same time as it is sent to the Internal Revenue Service. Upon request the foundation managers shall also furnish a copy of the annual return to the Attorney General or other appropriate State officer (within the meaning of section 6104 (c)(2)) of any State. The foundation managers shall attach to each copy of the annual return sent to State officers under this subparagraph a copy of the Form 4720, if any, filed by the foundation for the year.

(2) *Cross-reference.* For additional rules with respect to private foundations' returns and the public inspection of such returns, see section 6104(d) and the regulations thereunder.

(d) *Special rules for certain foreign organizations.* The provisions of paragraphs (b) and (c) of this section shall not apply with respect to an organization described in section 4948(b). The foundation managers of such organizations are not required to publish notice of availability of the annual return for inspection, to make the annual return available at the principal office of the foundation for public inspection under section 6104(d), or to send copies of the annual return to State officers.

(e) *Effective date.* The provisions of this section shall apply with respect to returns filed for taxable years beginning after December 31, 1980.

[T.D. 8026, 50 FR 20756, May 20, 1985]

§ 1.6034–1 Information returns required of trusts described in section 4947(a)(2) or claiming charitable or other deductions under section 642(c).

(a) *In general.* Every trust (other than a trust described in paragraph (b) of this section) claiming a charitable or other deduction under section 642(c) for the taxable year shall file, with respect to such taxable year, a return of information on form 1041–A. In addition, for taxable years beginning after December 31, 1969, every trust (other than a trust described in paragraph (b) of this section) described in section 4947 (a) (2) (including trusts described in section 664) shall file such return for each taxable year, unless all transfers in trust occurred before May 27, 1969. The return shall set forth the name and address of the trust and the following information concerning the trust in such detail as is prescribed by the form or in

the instructions issued with respect to such form:

(1) The amount of the charitable or other deduction taken under section 642(c) for the taxable year (and, for taxable years beginning prior to January 1, 1970, showing separately for each class of activity for which disbursements were made (or amounts were permanently set aside) the amounts which, during such year, were paid out (or which were permanently set aside) for charitable or other purposes under section 642(c));

(2) The amount paid out during the taxable year which represents amounts permanently set aside in prior years for which charitable or other deductions have been taken under section 642(c), and separately listing for each class of activity, for which disbursements were made, the total amount paid out;

(3) The amount for which charitable or other deductions have been taken in prior years under section 642(c) and which had not been paid out at the beginning of the taxable year;

(4)(i) The amount paid out of principal in the taxable year for charitable, etc., purposes, and separately listing for each such class of activity, for which disbursements were made, the total amount paid out;

(ii) The total amount paid out of principal in prior years for charitable, etc., purposes;

(5) The gross income of the trust for the taxable year and the expenses attributable thereto, in sufficient detail to show the different categories of income and of expense; and

(6) A balance sheet showing the assets, liabilities, and net worth of the trust as of the beginning of the taxable year.

(b) *Exceptions*—(1) *In general*. A trust is not required to file a Form 1041–A for any taxable year with respect to which the trustee is required by the terms of the governing instrument and applicable local law to distribute currently all of the income of the trust. For this purpose, the income of the trust shall be determined in accordance with section 643(b) and §§ 1.643(b)–1 and 1.643(b)–2.

(2) *Trusts described in section 4947(a)(1)*. For taxable years beginning after December 31, 1980, a trust described in section 4947(a)(1) is not required to file a Form 1041–A.

(c) *Time and place for filing return*. The return on form 1041–A shall be filed on or before the 15th day of the 4th month following the close of the taxable year of the trust, with the internal revenue officer designated by the instructions applicable to such form. For extensions of time for filing returns under this section, see § 1.6081–1.

(d) *Other provisions*. For publicity of information on Form 1041–A, see section 6104 and the regulations thereunder in part 301 of this chapter. For provisions relating to penalties for failure to file a return required by this section, see section 6652(d). For the criminal penalties for a willful failure to file a return and filing a false or fraudulent return, see sections 7203, 7206, and 7207.

[T.D. 6500, 25 FR 12108, Nov. 26, 1960, as amended by T.D. 7563, 43 FR 40221, Sept. 11, 1978; T.D. 8026, 50 FR 20757, May 20, 1985]

§ 1.6035–1 Returns of U.S. officers, directors and 10-percent shareholders of foreign personal holding companies for taxable years beginning after September 3, 1982.

(a) *Requirement of returns*—(1) *In general*. For taxable years of a foreign personal holding company beginning after September 3, 1982, each United States citizen or resident who is an officer, director, or 10-percent shareholder of the foreign personal holding company (as defined in section 552) shall file with his income tax return, on or before the date that return is due, Form 5471 and the applicable schedules to be completed in accordance with the instructions setting forth corporate, shareholder, and income information for the foreign personal holding company's annual accounting period that ends with or within the officer's, director's, or shareholder's taxable year. In the case of a foreign personal holding company which is a specified foreign corporation (as defined in section 898), the taxable year of such corporation shall be treated as its annual accounting period.

(2) *General corporate information.* The general foreign personal holding company information required by this section with respect to each taxable year is as follows:

(i) The name and address and employer identification number (if any) of the corporation;

(ii) The kind of business in which the corporation is engaged;

(iii) The date of its incorporation;

(iv) The country under the laws of which the corporation is incorporated;

(v) A description of each class of stock issued and outstanding by the corporation for the beginning and end of the annual accounting period;

(vi) The number of shares and par value of common stock of the corporation issued and outstanding as of the beginning and end of the taxable year;

(vii) The number of shares and par value of preferred stock of the corporation issued and outstanding as of the beginning and end of the taxable year, the rate of dividend on such stock and whether such dividend is cumulative or noncumulative; and

(viii) Any other information required by the appropriate form and its instructions.

For purposes of this paragraph, the term ''share'' includes any security convertible into a share in the corporation and any option granted by the corporation with respect to any share in the corporation.

(3) *Shareholder information.* The shareholder information required by this section is as follows:

(i) The name, address and taxpayer identification number (if any) of each person, whether foreign or U.S., who was a shareholder during the taxable year and the class and number of shares held by each, together with an explanation of any changes in stock holdings during the taxable year,

(ii) The name and address of each holder during the taxable year of securities convertible into stock of the corporation and the class, number, and face value of the securities held by each, together with and explanation of any changes in the holdings of such securities during the taxable year,

(iii) The name and address of each holder during the taxable year of any option granted by the corporation with respect to any share in the corporation, and a full description of the options held by each, together with an explanation of any changes in the holdings of such options during the taxable year, and

(iv) Any other information required by the appropriate form and its instructions.

(4) *Income information.* The income information required by this section is the gross income, deductions and credits, taxable income, foreign personal holding company income, and undistributed foreign personal holding company income for the taxable year and other information required by the appropriate form and its instructions.

(b) *Persons required to file return*—(1) *In general.* The determination of whether a United States citizen or resident is person who is an officer, director, or 10-percent shareholder required to file a return with respect to any foreign corporation is made as of the date that Form 5471 is required to be filed. If there is no such person required to file on that date (because, for example, the corporation has been dissolved), then filing is required of the persons who were officers, directors or 10-percent shareholders on the last day of the most recent taxable year of the corporation for which there was such a person who was a United States citizen or resident.

(2) *10-percent shareholder.* (i) The term ''10-percent shareholder'' means any individual who owns directly or indirectly (within the meaning of section 544) 10 percent or more in value of the outstanding stock of a foreign corporation.

(ii) An individual who does not own 10 percent or more in value of the outstanding stock directly but is required to file solely by attribution of another United States person's stock ownership is excused from filing if the direct owner that is an individual furnishes all the information required.

(3) *Two or more persons required to submit the same information.* If two or more persons are required to furnish the information for the same foreign personal holding company for the same period, one person may make one return on Form 5471. The single Form 5471

may be filed with the income tax return of any one of the persons and shall disclose the name, address, and identifying number of each other person or persons on whose behalf the return is filed. Each person on whose behalf the return is filed remains liable for any penalties imposed under sections 6679, 7203, 7206, and 7207.

(4) *Statement required*. Any United States citizen or resident required to furnish information under this section with his return who does not do so by reason of the provisions of subparagraph (2)(ii) or (3) of this paragraph shall file a statement with his income tax return indicating that such requirement has been or will be satisfied and identifying the return with which the information was or will be filed and the place of filing.

(c) *Separate returns for each corporation*. If a person is required to file returns under section 6035 and this section with respect to more than one foreign personal holding company, separate returns must be filed with respect to each company.

(d) *Corrective filing*. If an information return with respect to a taxable year of a foreign personal holding company beginning after September 3, 1982, is filed before [date which is 30 days after the date of publication of a Treasury decision in the FEDERAL REGISTER] and that return does not contain all of the information required by this section, then the filer of the return shall file an amended information return containing all of such information within 90 days after June 4, 1985.

(e) *Penalties*—(1) *Criminal penalties*. For criminal penalties for failure to file a return and filing a false or fraudulent return, see sections 7203, 7206, and 7207.

(2) *Civil penalties*. For civil penalties for failure to file a proper foreign personal holding company information return, see section 6679 and the regulations thereunder.

[T.D. 8028, 50 FR 23408, June 4, 1985; 50 FR 26359, June 26, 1985, as amended by T.D. 8573, 59 FR 64301, Dec. 14, 1994]

§ 1.6035–2 Returns of U.S. officers and directors of foreign personal holding companies for taxable years beginning before September 4, 1982.

For rules relating to information returns required to be filed by officers and directors of foreign personal holding companies for taxable years beginning before September 4, 1982, see section 6035(a) (as in effect before the enactment of the Tax Equity and Fiscal Responsibility Act of 1982) and 26 CFR 1.6035–1 (Revised as of April 1, 1981).

[T.D. 8028, 50 FR 23409, June 4, 1985]

§ 1.6035–3 Returns of 50-percent U.S. shareholders of foreign personal holding companies for taxable years beginning before September 4, 1982.

For rules relating to information returns required to be filed by shareholders of foreign personal holding companies for taxable years beginning before September 4, 1982, see section 6035(b) (as in effect before the enactment of the Tax Equity and Fiscal Responsibility Act of 1982) and 26 CFR 1.6035–2 (Revised as of April 1, 1961).

[T.D. 8028, 50 FR 23409, June 4, 1985]

§ 1.6036–1 Notice of qualification as executor or receiver.

For provisions relating to the notice required of fiduciaries, see the regulations under section 6036 contained in part 301 of this chapter (Regulations on Procedure and Administration).

§ 1.6037–1 Return of electing small business corporation.

(a) *In general*. Every small business corporation (as defined in section 1371(a)) which has made an election under section 1372(a) not to be subject to the tax imposed by chapter 1 of the Code shall file, with respect to each taxable year for which the election is in effect, a return of income on Form 1120–S. The return shall set forth the items of gross income and the deductions allowable in computing taxable income as required by the return form or in the instructions issued with respect thereto and shall be signed in accordance with section 6062 by the person authorized to sign a return. The return shall also set forth the following

information concerning the electing small business corporation:

(1) The names and addresses of all persons owning stock in the corporation at any time during the taxable year;

(2) The number of shares of stock owned by each shareholder at all times during the taxable year;

(3) The amount of money and other property distributed by the corporation during the taxable year to each shareholder;

(4) The date of each distribution of money and other property; and

(5) Such other information as is required by the form or by the instructions issued with respect to such form.

(b) *Time and place for filing return.* The return shall be filed on or before the 15th day of the third month following the close of the taxable year with the internal revenue officer designated in the instructions applicable to Form 1120–S. (See section 6072.)

(c) *Other provisions.* The return on Form 1120–S will be treated as a return filed by the corporation under section 6012, relating to persons required to make returns of income, for purposes of the provisions of chapter 66 of the Code, relating to limitations. Thus, for example, the period of limitation on assessment and collection of any corporate tax found to be due upon a subsequent determination that the corporation was not entitled to the benefits of subchapter S, chapter 1 of the Code, will run from the date of filing the return under section 6037, or from the date prescribed for filing such return, whichever is the later.

(d) *Penalties.* For criminal penalties for failure to file a return, supply information, or pay tax, and for filing a false or fraudulent return, statement, or other document, see sections 7203, 7206, and 7207.

[T.D. 6500, 25 FR 12108, Nov. 26, 1960, as amended by T.D. 7012, 34 FR 7690, May 15, 1969]

§ 1.6038–1 Information returns required of domestic corporations with respect to annual accounting periods of certain foreign corporations beginning before January 1, 1963.

(a) *Requirement of return.* For taxable years beginning after December 31, 1960, every domestic corporation shall make a separate annual information return on Form 2952, in duplicate, with respect to each foreign corporation which it controls, as defined in paragraph (b) of this section, and with respect to each foreign subsidiary, as defined in paragraph (c) of this section, for each annual accounting period (described in paragraph (d) of this section) of each such controlled foreign corporation or foreign subsidiary beginning after December 31, 1960, and before January 1, 1963. Such information shall not be required to be furnished, however, with respect to a corporation defined in section 1504(d) of the Code which makes a consolidated return for the taxable year. For annual accounting periods beginning after December 31, 1962, see § 1.6038–2.

(b) *Control.* A domestic corporation shall be deemed to be in control of a foreign corporation if at any time during its taxable year it owns more than 50 percent of the voting stock of such foreign corporation.

(c) *Foreign subsidiary.* A foreign corporation more than 50 percent of the voting stock of which is owned by a controlled foreign corporation at any time during the annual accounting period of such controlled foreign corporation shall be considered a foreign subsidiary.

(d) *Period covered by return*—(1) *Controlled foreign corporation.* The information with respect to a controlled foreign corporation shall be furnished for its annual accounting period ending with or within the domestic corporation's taxable year.

(2) *Foreign subsidiary*. The information with respect to a foreign subsidiary shall be furnished for such subsidiary's annual accounting period ending with or within the controlled foreign corporation's annual accounting period.

(3) *Annual accounting period defined*. For purposes of this section, the annual accounting period of a controlled foreign corporation or of a foreign subsidiary is the annual period on the basis of which the controlled foreign corporation or foreign subsidiary regularly computes its income in keeping its books. The term ''annual accounting period'' may refer to a period of less than 1 year, where for example the foreign income, war profits, and excess profits taxes are determined on the basis of an accounting period of less than 1 year as described in section 902(c)(2).

(e) *Contents of return*. The return on Form 2952 shall contain the following information with respect to each controlled corporation and each foreign subsidiary:

(1) The name and address of the corporation;

(2) The principal place of business of the corporation;

(3) The date of incorporation and the country under whose laws incorporated;

(4) The nature of the corporation's business;

(5) As regards the outstanding stock of the corporation:

(i) A description of each class of the corporation's stock, and

(ii) The number of shares of each class outstanding at the beginning and the end of the annual accounting period;

(6) A list showing the name and address of, and the number of shares of each class of the corporation's stock held by, each citizen or resident of the United States, and each domestic corporation, who is a shareholder of record owning at any time during the annual accounting period 5 percent or more in value of any class of the corporation's outstanding stock;

(7) The amount of the corporation's gross receipts, net profits before taxes and provision for foreign income taxes, for the annual accounting period, as reflected on the financial statements required under paragraph (f) of this section to be filed with the return; and

(8) A summary showing the total amount of each of the following types of transactions of the corporation, which took place during the annual accounting period, with the domestic corporation or any shareholder of the domestic corporation owning at the time of the transaction 10 percent or more of the value of any class of stock outstanding of the domestic corporation:

(i) Sales and purchases of stock in trade;

(ii) Purchases of property of a character which is subject to the allowance for depreciation;

(iii) Compensation paid and compensation received for the rendition of technical, managerial, engineering, construction, scientific, or like services;

(iv) Commissions paid and commissions received;

(v) Rents and royalties paid and rents and royalties received;

(vi) Amounts loaned and amounts borrowed (other than open accounts which arise and are collected in the ordinary course of business);

(vii) Dividends paid and dividends received;

(viii) Interest paid and interest received; and

(ix) Premiums received for insurance or reinsurance.

If the domestic corporation is a bank, as defined in section 581, or is controlled within the meaning of section 368(c) by a bank, the term ''transactions'' shall not, as to a corporation with respect to which a return is filed, include banking transactions entered into on behalf of customers; in any event, however, deposits in accounts between a controlled foreign corporation or a foreign subsidiary and the domestic corporation or a 10-percent shareholder described in this subparagraph and withdrawals from such accounts shall be summarized by reporting end-of-month balances.

(f) *Financial statements*. The following information with respect to each controlled foreign corporation and each foreign subsidiary shall be attached to and filed as part of the return required by this section:

(1) A statement of the corporation's profit and loss for the annual accounting period;

(2) A balance sheet as of the end of the annual accounting period of the corporation showing:

(i) The corporation's assets,

(ii) The corporation's liabilities, and

(iii) The corporation's net worth; and

(3) An analysis of changes in the corporation's surplus accounts during the annual accounting period including both opening and closing balances.

The statements listed in subparagraphs (1), (2), and (3) of this paragraph shall be prepared in conformity with generally accepted accounting principles, and in such form and detail as is customary for the corporation's accounting records.

(g) *Method of reporting.* All amounts furnished under paragraphs (e) and (f) of this section shall be expressed in United States currency with a statement of the exchange rates used.

(h) *Time and place for filing return.* Returns on Form 2952 required under paragraph (a) of this section shall be filed with the domestic corporation's income tax return on or before the fifteenth day of the third month following the close of such corporation's taxable year.

(i) *Extensions of time for filing.* District directors are authorized to grant reasonable extensions of time for filing returns on Form 2952 in accordance with the applicable provisions of § 1.6081–1. An application by a domestic corporation for an extension of time for filing a return of income shall also be considered as an application for an extension of time for filing returns on Form 2952.

(j) *Failure to furnish information*—(1) *Effect on foreign tax credit.* (i) Failure by a domestic corporation to furnish, in accordance with the provisions of this section, any return or any information in any return, required to be filed for a taxable year under authority of section 6038 on or before the date prescribed in paragraph (h) of this section (determined with regard to any extension of time for such filing) shall affect the application of section 902 as provided in subparagraph (2) of this paragraph. Such failure shall affect the application of section 902 to such domestic corporation or to any person who acquires from any person any portion (but only to the extent of such portion) of the interest of such domestic corporation in any controlled foreign corporation or foreign subsidiary.

(ii) Where the domestic corporation, having filed the return required by this section except for an omission of, or error with respect to, some of the information referred to in paragraphs (e) and (f) of this section, establishes to the satisfaction of the Commissioner that such omission or error was inadvertent or for reasonable cause and that such domestic corporation has substantially complied with this section, such omission or error shall not constitute a failure under this section.

(2) *Reduction of foreign taxes.* In the application of section 902 to the domestic corporation or person referred to in subparagraph (1)(i) of this paragraph for any taxable year, the amount of taxes paid or deemed paid by each controlled foreign corporation and each foreign subsidiary for the accounting period or periods for which the domestic corporation was required for the taxable year of the failure to furnish information under this section shall be reduced by 10 percent. The 10 percent reduction is not limited to the taxes paid or deemed paid by the controlled foreign corporation or foreign subsidiary with respect to which there is a failure to file information but shall apply to the taxes paid or deemed paid by all controlled foreign corporations and foreign subsidiaries.

(3) *Reduction for continued failure.* (i) If the failure, referred to in subparagraph (1)(i) of this paragraph, continues for 90 days or more after date of written notice by the district director to the domestic corporation, then the amount of the reduction referred to in subparagraph (2) of this paragraph shall be 10 percent plus an additional 5 percent for each 3-month period, or fraction thereof, during which such failure continues after the expiration of such 90-day period.

(ii) Taxes paid by a foreign subsidiary when once reduced for a failure shall not be reduced again for the same failure in their status as taxes deemed paid by a controlled foreign corporation. Where a failure continues, each

additional periodic 5 percent reduction, referred to in subdivision (i) of this subparagraph, shall be considered as part of the one reduction.

(4) *Reasonable cause.* (i) For purposes of subsection (b) of section 6038 and this section the time prescribed for furnishing information under this paragraph, and the beginning of the 90-day period after notice by the district director, shall be treated as being not earlier than the last day on which (as shown to the satisfaction of the district director) reasonable cause existed for failure to furnish such information.

(ii) A domestic corporation, which wishes to avoid a reduction in foreign tax credit as provided in subparagraphs (2) and (3) of this paragraph for failure to furnish information in accordance with this section, must make an affirmative showing of all facts alleged as a reasonable cause for such failure in the form of a written statement containing a declaration that it is made under the penalties of perjury.

(5) *Penalties.* The information required by section 6038 of the Code must be furnished even though there are no foreign taxes which would be reduced under the provisions of subparagraph (2) of this paragraph. For criminal penalties for failure to file a return and filing a false or fraudulent return, see sections 7203, 7206, and 7207 of the Code.

[T.D. 6506, 25 FR 12241, Nov. 30, 1960, as amended by T.D. 6621, 27 FR 11878, Dec. 1, 1962]

§ 1.6038–2 Information returns required of United States persons with respect to annual accounting periods of certain foreign corporations beginning after December 31, 1962.

(a) *Requirement of return.* Every U.S. person shall make a separate annual information return with respect to each annual accounting period (described in paragraph (e) of this section) beginning after December 31, 1962, of each foreign corporation which that person controls (as defined in paragraph (b) of this section) for an uninterrupted period of 30 days or more during such annual accounting period. Such information shall not be required to be furnished, however, with respect to a corporation defined in section 1504(d) of the Code which makes a consolidated return for the taxable year. The return shall be made, with respect to annual accounting periods ending with or within the United States person's taxable year, on—

(1) Form 2952 if such taxable year ends before December 31, 1982,

(2) Form 5471 if such taxable year ends on or after December 31, 1983, or

(3) Either Form 5471 or Form 2952 if such taxable year ends on or after December 31, 1982 and before December 31, 1963.

(b) *Control.* A person shall be deemed to be in control of a foreign corporation if at any time during that person's taxable year it owns stock possessing more than 50 percent of the total combined voting power of all classes of stock entitled to vote, or more than 50 percent of the total value of shares of all classes of stock of the foreign corporation. A person in control of a corporation which, in turn, owns more than 50 percent of the combined voting power, or of the value, of all classes of stock of another corporation is also treated as being in control of such other corporation. The provisions of this paragraph may be illustrated by the following example:

Example. Corporation A owns 51 percent of the voting stock in Corporation B. Corporation B owns 51 percent of the voting stock in Corporation C. Corporation C in turn owns 51 percent of the voting stock in Corporation D. Corporation D is controlled by Corporation A.

(c) *Attribution rules.* For the purpose of determining control of domestic or foreign corporations the constructive ownership rules of section 318(a) shall apply except that:

(1) Stock owned by or for a partner or a beneficiary of an estate or trust shall not be considered owned by the partnership, estate, or trust when the effect is to consider a United States person as owning stock owned by a person who is not a United States person;

(2) A corporation will not be considered as owning stock owned by or for a 50 percent or more shareholder when the effect is to consider a United States person as owning stock owned by a person who is not a United States person; and

(3) If 10 percent or more in value of the stock in a corporation is owned, directly or indirectly, by or for any person, section 318(a)(2)(C) shall apply.

The constructive ownership rules of section 318(a) apply only for purposes of determining control as defined in paragraph (b) of this section.

(d) *U.S. person*. For purposes of section 6038 and this section, the term ''United States person'' has the meaning assigned to it by section 7701(a)(30) of the Code, except that—

(1) With respect to a corporation organized under the laws of the Commonwealth of Puerto Rico, such term does not include an individual who is a bona fide resident of Puerto Rico, if a dividened received by such individual during the taxable year from such corporation would be excluded from gross income under section 933(1),

(2) With respect to a corporation organized under the laws of the Virgin Islands, such term does not include an individual who is a bona fide resident of the Virgin Islands and whose income tax obligation under Subtitle A (relating to income taxes) of the Code for the taxable year is satisfied pursuant to section 28(a) of the Revised Organic Act of the Virgin Islands, approved July 22, 1954 (48 U.S.C. 1642), by paying tax on income derived from all sources both within and outside the Virgin Islands into the treasury of the Virgin Islands,

(3) With respect to a corporation organized under the laws of Guam or the Northern Mariana Islands, such term does not include an individual who is a bona fide resident of Guam or the Northern Mariana Islands, respectively, and who is relieved of liability for income tax to the United States under section 935(c)(3) of the Code or section 601 of the Covenant to Establish a Commonwealth of the Northern Mariana Islands in Political Union with the United States of America (Pub. L. 94–241), respectively, for such individual's taxable year referred to in paragraph (e) of this section, and

(4) With respect to a corporation organized under the laws of any possession of the United States (other than Guam, the Northern Mariana Islands, Puerto Rico, or the Virgin Islands), such term does not include an individual who is a bona fide resident of such possession for the entire taxable year and whose income derived from sources within any possession of the United States is not, by reason of section 931(a), includible in gross income under subtitle A (relating to income taxes) of the Code for the taxable year.

(5) For taxable years ending after December 31, 1987, with respect to a corporation organized under the laws of American Samoa, the term does not include an individual who is a bona fide resident of American Samoa, provided—

(i) 80 percent or more of the gross income of the corporation for the 3-year period ending at the close of the taxable year (or for such part of such period as such corporation or any predecessor has been in existence) was derived from sources within American Samoa or was effectively connected with the conduct of a trade or business in American Samoa; and

(ii) 50 percent or more of the gross income of such corporation for such period (or part) was derived from the conduct of an active trade or business within American Samoa.

An individual for whom an election under section 6013 (g) or (h) is in effect shall, subject to the exceptions contained in this paragraph (d), be considered a United States person for purposes of section 6038 and this section.

(e) *Period covered by return*. The information required under paragraphs (f) and (g) of this section with respect to a foreign corporation shall be furnished for the annual accounting period of the foreign corporation ending with or within the United States person's taxable year. For purposes of this section, the annual accounting period of a foreign corporation is the annual period on the basis of which that corporation regularly computes its income in keeping its books. In the case of a specified foreign corporation (as defined in section 898), the taxable year of such corporation shall be treated as its annual accounting period. The term *annual accounting period* may refer to a period of less than one year, where, for example, the foreign income, war profits, and excess profits taxes are determined on the basis of an accounting period of

less than one year as described in section 902(c)(5). If more than one annual accounting period ends with or within the United States person's taxable year, separate annual information returns shall be submitted for each annual accounting period.

(f) *Contents of return*. The return on Form 2952 or Form 5471 shall contain so much of the following information, and in such form or manner, as the form shall prescribe with respect to each foreign corporation:

(1) The name, address, and employer identification number, if any, of the corporation;

(2) The principal place of business of the corporation;

(3) The date of incorporation and the country under whose laws incorporated;

(4) The name and address of the foreign corporation's statutory or resident agent in the country of incorporation;

(5) The name, address, and identifying number of any branch office or agent of the foreign corporation located in the United States;

(6) The name and address of the person (or persons) having custody of the books of account and records of the foreign corporation, and the location of such books and records if different from such address;

(7) The nature of the corporation's business and the principal places where conducted;

(8) As regards the outstanding stock of the corporation—

(i) A description of each class of the corporation's stock, and

(ii) The number of shares of each class outstanding at the beginning and end of the annual accounting period;

(9) A list showing the name, address, and identifying number of, and the number of shares of each class of the corporation's stock held by, each United States person who is a shareholder owning at any time during the annual accounting period 5 percent or more in value of any class of the corporation's outstanding stock;

(10) For the annual accounting period, the amount of the corporation's:

(i) Current earnings and profits;

(ii) Foreign income, war profits, and excess profits taxes paid or accrued;

(iii) Distributions out of current earnings and profits for the period;

(iv) Distributions other than those described in paragraph (f)(10)(iii) of this section and the source thereof; and

(v) For Forms 5471 filed for taxable years ending after December 15, 1990, such earnings and profits information as the form shall prescribe, including post-1986 undistributed earnings described in section 902(c)(1), pre-1987 amounts, total earnings and profits, and previously taxed earnings and profits described in section 959(c); and

(11) A summary showing the total amount of each of the following types of transactions of the corporation, which took place during the annual accounting period, with the person required to file this return, any other corporation controlled by that person, or any United States person owning at the time of the transaction 10 percent or more in value of any class of stock outstanding of the foreign corporation, or of any corporation controlling that foreign corporation:

(i) Sales and purchases of stock in trade;

(ii) Purchases of tangible property other than stock in trade;

(iii) Sales and purchases of patents, inventions, models, or designs (whether or not patented), copyrights, trademarks, secret formulas or processes, or any other similar property rights;

(iv) Compensation paid and compensation received for the rendition of technical, managerial, engineering, construction, scientific, or like services;

(v) Commission paid and commissions received;

(vi) Rents and royalties paid and rents and royalties received;

(vii) Amount loaned and amounts borrowed (except open accounts resulting from sales and purchases reported under other items listed in this paragraph (f)(11) that arise and are collected in full in the ordinary course of business);

(viii) Dividends paid and dividends received;

(ix) Interest paid and interest received; and

(x) Premiums received for insurance or reinsurance.

For purposes of this paragraph (f)(11), if the United States person is a bank, as defined in section 581, or is controlled within the meaning of section 368(c) by a bank, the term ''transactions'' shall not, as to a corporation with respect to which a return is filed, include banking transactions entered into on behalf of customers; in any event, however, deposits in accounts between a foreign corporation, controlled (within the meaning of paragraph (b) of this section) by a United States person, and a person described in this paragraph (f)(11) and withdrawals from such accounts shall be summarized by reporting end-of-month balances.

(g) *Financial statements*. The following information with respect to the foreign corporation shall be attached to and filed as part of the return required by this section. Forms 5471 filed after September 30, 1991, shall contain this information in such form or manner as the form shall prescribe with respect to each foreign corporation:

(1) A statement of the corporation's profit and loss for the annual accounting period;

(2) A balance sheet as of the end of the annual accounting period of the corporation showing—

(i) The corporation's asset;

(ii) The corporation's liabilities; and

(iii) The corporation's net worth; and

(3) An analysis of changes in the corporation's surplus accounts during the annual accounting period including both opening and closing balances.

The information listed in this paragraph (g) shall be prepared in conformity with generally accepted accounting principles, and in such detail as is customary for the corporation's accounting records.

(h) *Method of reporting*. Except as provided in this paragraph (h), all amounts furnished under paragraphs (f) and (g) of this section shall be expressed in United States dollars with a statement of the exchange rates used. The following rules shall apply for taxable years ending after December 31, 1994, with respect to returns filed after December 31, 1995. All amounts furnished under paragraph (g) of this section shall be expressed in United States dollars computed and translated in conformity with United States generally accepted accounting principles. Amounts furnished under paragraph (g)(1) of this section shall also be furnished in the foreign corporation's functional currency as required on the form. Earnings and profits amounts furnished under paragraphs (f)(10) (i), (iii), (iv), and (v) of this section shall be expressed in the foreign corporation's functional currency except to the extent the form requires specific items to be translated into United States dollars. Tax amounts furnished under paragraph (f)(10)(ii) of this section shall be furnished in the foreign currency in which the taxes are payable and in United States dollars translated in accordance with section 986(a). All amounts furnished under paragraph (f)(11) of this section shall be expressed in U.S. dollars translated from functional currency at the weighted average exchange rate for the year as defined in §1.989(b)–1. The foreign corporation's functional currency is determined under section 985. All statements submitted on or with the return required under this section shall be rendered in the English language.

(i) *Time and place for filing return*. Returns on Form 2952 or Form 5471 required under paragraph (a) of this section shall be filed with the United States person's income tax return on or before the date required by law for the filing of that person's income tax return. District directors and directors of service centers are authorized to grant reasonable extensions of time for filing returns on Form 2952 or Form 5471 in accordance with the applicable provisions of §1.6081–1 of this chapter. An application for an extension of time for filing a return of income shall also be considered as an application for an extension of time for filing returns on Form 2952 or Form 5471.

(j) *Two or more persons required to submit the same information*—(1) *Return jointly made*. If two or more persons are required to furnish information with respect to the same foreign corporation for the same period, such persons may, in lieu of making separate returns, jointly make one return. Such joint return shall be filed with the income tax return of any one of the persons making such joint return.

(2) *Persons excepted from furnishing information*—(i) *Conditions.* Any person required to furnish information under this section with respect to a foreign corporation need not furnish that information provided all of the following conditions are met:

(A) Such person does not directly own an interest in the foreign corporation;

(B) Such person is required to furnish the information solely by reason of attribution of stock ownership from a United States person under paragraph (c) of this section; and

(C) The person from whom the stock ownership is attributed furnishes all of the information required under this section of the person to whom the stock ownership is attributed. (For a rule regarding attribution from a nonresident alien, see paragraph (l) of this section).

(ii) If an individual who is a United States person required to furnish information with respect to a foreign corporation under section 6038 is entitled under a treaty to be treated as a nonresident of the United States, and if the individual claims this treaty benefit, and if there are no other United States persons that are required to furnish information under section 6038 with respect to the foreign corporation, then the individual may satisfy the requirements of paragraphs (f)(10), (f)(11), (g), and (h) of this section by filing the audited foreign financial statements of the foreign corporation with the individual's return required under section 6038.

(iii) *Illustrations.* The rule of this paragraph (j)(2) is illustrated by the following examples:

Example (1). A, a U.S. person owns 100 percent of the stock of M, a domestic corporation. A also owns 100 percent of the stock of N, a foreign corporation organized under the laws of foreign country Y. A, in filing the information return required by this section with respect to N Corporation, in fact furnishes all of the information required of M Corporation with respect to N Corporation. M Corporation need not file the information.

Example (2). X, a domestic corporation owns 100 percent of the stock of Y, a domestic corporation, Y Corporation owns 100 percent of the stock of Z, a foreign corporation. X Corporation is not excused by this paragraph (j)(2) from filing information with respect to Z Corporation because X Corporation is deemed to control Z Corporation under the provisions of paragraph (b) of this section without recourse to the attribution rules in paragraph (c) of this section.

(3) *Statement required.* Any United States person required to furnish information under this section with his return who does not do so by reason of the provisions of paragraph (j)(1) or (2) of this section shall file a statement with his income tax return indicating that such liability has been (or, in the case of a joint return made under paragraph (j)(1) of this section, will be) satisfied and identifying the return with which the information was or will be filed and the place of filing.

(k) *Failure to furnish information*—(1) *Dollar amount penalty*—(i) *In general.* If any person required to file Form 2952 or Form 5471 under section 6038 and this section fails to furnish any information described in paragraphs (f) and (g) of this section within the time prescribed by paragraph (i) of this section, such person shall pay a penalty of $1,000 for each annual accounting period of each foreign corporation with respect to which such failure occurs.

(ii) *Increase in penalty for continued failure after notification.* If a failure described in paragraph (k)(1)(i) of this section continues for more than 90 days after the date on which the district director mails notice of such failure to the person required to file Form 2952 or Form 5471, such person shall pay a penalty of $1,000, in addition to the penalty imposed by section 6038(b)(1) and paragraph (k)(1)(i) of this section, for each 30-day period (or fraction thereof) during which such failure continues after such 90-day period has expired. The additional penalty imposed by section 6038(b)(2) and this paragraph (k)(1)(ii) shall be limited to a maximum of $24,000 for each failure.

(iii) *Effective date.* The penalty imposed by section 6038(b) and this paragraph (k)(1) shall apply with respect to information for annual accounting periods ending after September 3, 1982.

(2) *Penalty of reducing foreign tax credit*—(i) *Effect on foreign tax credit.* Failure of a United States person to furnish, in accordance with the provisions of this section, any return or any information in any return, required to

be filed for a taxable year under authority of section 6038 on or before the date prescribed in paragraph (i) of this section may affect the application of section 901 as provided in paragraph (k)(2)(ii) of this section and may affect the application of sections 902 and 960 as provided in paragraph (k)(2)(iii) of this section. Such failure may affect the application of sections 902 and 960 to any such United States person which is a corporation or to any person who acquires from any other person any portion (but only to the extent of such portion) of the interest of such other person in any such foreign corporation.

(ii) *Application of section 901.* In the application of section 901 to a United States person referred to in paragraph (k)(2)(i) of this section, the amount of taxes paid or deemed paid by such person for any taxable year, with or within which the annual accounting peroid of a foreign corporation for which such person failed to furnish information required under this section ended, may be reduced by 10 percent. However, no tax reduced under paragraph (k)(2)(iii) of this section or deemed paid under section 904(c) shall be reduced under the provisions of this paragraph (k)(2)(ii).

(iii) *Application of sections 902 and 960.* In the application of sections 902 and 960 to a United States person referred to in paragraph (k)(2)(i) of this section for any taxable year, the amount of taxes paid or deemed paid by each foreign corporation for the accounting period or periods for which such person was required for the taxable year of the failure to furnish information under this section may be reduced by 10 percent. The 10-percent reduction is not limited to the taxes paid or deemed paid by the foreign corporation with respect to which there is a failure to file information but may apply to the taxes paid or deemed paid by all foreign corporations controlled by that person. In applying subsections (a) and (b) of section 902, and in applying subsection (a) of section 960, the reduction provided by this paragraph (k)(2) shall not apply for purposes of determining the amount of accumulated profits in excess of income, war profits, and excess profits taxes.

(iv) *Reduction for continued failure after notice.* (A) If the failure referred to in paragraph (k)(2)(i) of this section continues for more than 90 days after the date on which the district director mails notice of such failure to such United States person, then the amount of the reduction referred to in paragraphs (k)(2) (ii) and (iii) of this section may be 10 percent plus an additional 5 percent for each 3-month period, or fraction thereof, during which such failure continues after the expiration of such 90-day period.

(B) No taxes shall be reduced under this paragraph (k)(2) more than once for the same failure. Taxes paid by a foreign corporation when once reduced for a failure shall not be reduced again for the same failure in their status as taxes deemed paid by a corporate shareholder. Where a failure continues, each additional periodic 5-percent reduction, referred to in paragraph (k)(2)(iv)(A) of this section, shall be considered as part of the one reduction.

(v) *Limitation on reduction of foreign tax credit.* The amount of the reduction under this paragraph (k)(2) for each failure to furnish information with respect to a foreign corporation as required under this section shall not exceed the greater of:

(A) $10,000, or

(B) The income of the foreign corporation for its annual accounting period with respect to which the failure occurs. For purposes of this section if a person is required to furnish information with respect to more than one foreign corporation, controlled (within the meaning of paragraph (b) of this section) by that person, each failure to submit information for each such corporation constitutes a separate failure.

(vi) *Offset for dollar amount penalty imposed.* The total amount of the reduction or reductions which, but for this paragraph (k)(2)(vi), may be made under this paragraph (k)(2) with respect to any separate failure, shall not exceed the maximum amount of such reductions which may be imposed, reduced (but not below zero) by the amount of the dollar amount penalty imposed by paragraph (k)(1) of this section with respect to such separate failure.

(3) *Reasonable cause.* (i) For purposes of section 6038 (b) and (c) and this section, the time prescribed for furnishing information under paragraph (i) of this section, and the beginning of the 90-day period after mailing of notice by the district director under paragraphs (k)(1)(ii) and (2)(iv)(A) of this section, shall be treated as being not earlier than the last day on which reasonable cause existed for failure to furnish the information.

(ii) To show that reasonable cause existed for failure to furnish information as required by section 6038 and this section, the person required to report such information must make an affirmative showing of all facts alleged as reasonable cause for such failure in a written statement containing a declaration that it is made under the penalties of prejury. The statement must be filed with the district director for the district or the director of the service center where the return is required to be filed. The district director or the director of the service center shall determine whether the failure to furnish information was due to reasonable cause, and if so, the period of time for which such reasonable cause existed. In the case of a return that has been filed as required by this section except for an omission of, or error with respect to, some of the information required, if the person who filed the return establishes to the satisfaction of the district director or the director of the service center that the person has substantially complied with this section, then the omission or error shall not constitute a failure under this section.

(4) *Other penalties.* The information required by section 6038 and this section must be furnished even though there are no foreign taxes which would be reduced under the provisions of this section, and even though the information required may not affect the amount of any tax due under the Internal Revenue Code. For criminal penalties for failure to file a return and filing a false or fraudulent return, see sections 7203, 7206, and 7207 of the Code.

(5) *Illustrations.* The provisions of this paragraph may be illustrated by the following examples.

Example (1). M, a domestic corporation owns 100 percent of the stock of N, a foreign corporation. Both M and N use the calendar year as a taxable year and annual accounting period, and all of the following events occur in or with respect to the 1980 taxable year. The dividend from N is the only dividend from a foreign corporation received by M during the taxable year, and the foreign taxes listed are the only foreign taxes paid or deemed paid by M and N for the taxable year. On March 15, 1981, M filed its income tax return and paid its income tax, but M did not file Form 2952 with respect to N's 1980 annual accounting period. On June 1, 1961, the district director mailed notice to M of M's failure to file Form 2952 with respect to N. On November 30, 1981, M filed a complete Form 2952 with respect to N's 1980 annual accounting period.

(a) Gains, profits, and income of N	$100,000
(b) Foreign tax paid by N with respect to such gains, profits, and income	40,000
(c) Reduction of foreign tax paid by N (for purposes of M's section 902 deemed paid credit) resulting from M's failure to file information with respect to N as required under section 6038(a) and this section: failure to file within the time prescribed in paragraph (i) of this section, 10-percent reduction; continued failure for one additional 3-month period after 90-day period after notice mailed, 5-percent reduction; total reduction, 15 percent ($40,000 times 15 percent)	6,000
(d) Foreign tax paid by N after section 6038(c)(1)(B) reduction	34,000
(e) Dividend paid by N to M	45,000
(f) Accumulated profits of N as defined in section 902(c)(1) (determined without regard to the section 6038(c)(1)(B) reduction)	100,000
(g) Accumulated profits of N as described in section 902(a) (determined without regard to the section 6038(c)(1)(B) reduction)	60,000
(h) For purposes of the section 902 credit, M is deemed to have paid the same proportion of foreign taxes paid (reduced as provided under section 6038(c)) with respect to the accumulated profits described in section 902(a) (determined without regard to the reduction provided under section 6038(c)) as the amount of the dividend (determined without regard to section 78) bears to such amount of accumulated profits	25,500

$(45{,}000 \div 60{,}000) \times 34{,}000 = 25{,}500$

M must include $25,500 in gross income as a dividend under the provisions of section 78 of the Code. This example illustrates that the reductions in foreign taxes paid by the foreign corporation provided under section 8038(c) are taken into account in determining the amount included in gross income of the domestic corporation under section 78 of the Code as foreign taxes deemed paid, but such reductions are not taken into account in computing accumulated profits for purposes of determining the portion of foreign taxes deemed paid with respect to a particular dividend. The dollar amount penalty imposed by section 8038 (b) and paragraph (k)(1) of this section does not apply with respect to information for annual accounting periods ending before September 4, 1982, and therefore does not apply to M with respect to M's failure to file Form 2952 in this example.

Example (2). The facts are the same as in example (1) except that all of the events occur in or with respect to the 1982 taxable year. On March 15, 1983. M filed its income tax return and paid its income tax, but M did not file Form 2952 or Form 5471 with respect to N's 1982 annual accounting period. On June 1, 1983, the district director mailed notice to M of M's failure to file Form 2952 or Form 5471 with respect to N. On November 30, 1983, M filed a complete Form 5471 with respect to N's 1982 annual accounting period. Under paragraph (k)(1)(i) of this section, M is subject to a penalty of $1,000. Under paragraph (k)(1)(ii) of this section, that penalty is increased by $4,000 because the failure continued for 92 days (three full 30-day periods and a fraction of a fourth 30-day period) after the end of the 90-day period following mailing of the notice by the district director, bringing M's dollar amount penalty under paragraph (k)(1) of this section to $5,000. For purpose of determining the foreign tax credit available to M, there may be imposed a reduction of foreign tax paid by N of $6,000, which would be the total of reductions under paragraph (k)(2) of this section with respect to M's failure to file under section 6038 for N's 1982 annual accounting period, before application of paragraph (k)(2)(vi) of this section. Under said paragraph (k)(2)(vi), the amount of the foreign tax reduction imposed is reduced by the amount of the dollar amount penalty, leaving a foreign tax reduction penalty of $1,000 which may be imposed in addition to the $5,000 dollar amount penalty. If imposed, the $1,000 tax reduction would then be applied in the calculation of taxes deemed paid by M under section 902 as in example (1), items (c), (d), and (h).

(l) *Other persons excepted from filing.* For tax years of foreign corporations ending on or after December 29, 1999, any person required to furnish information under this section with respect to a foreign corporation does not have to furnish that information if the following conditions are met—

(1) Such person does not own a direct or indirect interest in the foreign corporation; and

(2) Such person is required to furnish information solely by reason of attribution of stock ownership from a nonresident alien(s) under paragraph (c) of this section.

[T.D. 8040, 50 FR 30163, July 24, 1985, as amended by T.D. 8573, 59 FR 64302, Dec. 14, 1994; T.D. 8733, 62 FR 53385, Oct. 14, 1997; T.D. 8850, 64 FR 72550, Dec. 28, 1999]

§ 1.6038–3 Information returns required of certain United States persons with respect to controlled foreign partnerships (CFPs).

(a) *Persons required to make return*—(1) *Controlling fifty-percent partners.* The term *controlling fifty-percent partner* means a United States person that controlled (as defined in paragraph (b)(1) of this section) the foreign partnership at any time during the partnership's tax year (as defined in paragraph (b)(8) of this section). Except as provided in paragraph (c), (d), or (e) of this section, for each tax year of a foreign partnership during which the partnership has one or more controlling fifty-percent partners, each controlling fifty-percent partner must complete and file Form 8865, ''Return of U.S. Persons With Respect To Certain Foreign Partnerships,'' containing the information described in paragraph (g) of this section.

(2) *Controlling ten-percent partners.* If at any point during a foreign partnership's tax year (as defined in paragraph (b)(8) of this section) a United States person owned a ten-percent or greater interest in the partnership while the partnership was controlled by United States persons owning ten-percent or greater interests, such United States person is a controlling ten-percent partner. See paragraph (b)(1) of this section for the definition of control. However, a United States person is not a controlling ten-percent partner with respect to a particular foreign partnership for a particular tax year of the foreign partnership if at any point during that year the partnership had a controlling fifty-percent partner, as defined in paragraph (a)(1) of this section. Except as provided in paragraph (c),

(d), or (e) of this section, for each tax year of a partnership during which the partnership has controlling ten-percent partners, each controlling ten-percent partner must complete and file Form 8865 containing the information described in paragraph (g)(1) of this section.

(3) *Separate returns for each partnership.* A United States person required to report under this paragraph (a) must file a separate Form 8865 for each foreign partnership with respect to which the person is a controlling fifty-percent partner or a controlling ten-percent partner.

(b) *Ownership determinations and definitions*—(1) *Control.* Control of a foreign partnership is ownership of more than a fifty-percent interest in the partnership.

(2) *Fifty-percent interest.* A fifty-percent interest in a partnership is an interest equal to fifty percent of the capital interest in such partnership, an interest equal to fifty percent of the profits interest in such partnership, or an interest to which fifty percent of the deductions or losses of such partnership are allocated.

(3) *Ten-percent interest.* A ten-percent interest in a partnership is an interest equal to ten percent of the capital interest in such partnership, an interest equal to ten percent of the profits interest in such partnership, or an interest to which ten percent of the deductions or losses of such partnership are allocated.

(4) *Constructive ownership rules.* For purposes of determining an interest in a partnership, the constructive ownership rules of section 267(c) (other than section 267(c)(3)) apply, taking into account that such rules refer to corporations and not to partnerships. However, an interest will be attributed from a nonresident alien under the family attribution rules of section 267(c)(2) and (4) only if the person to whom the interest is attributed owns a direct or indirect (under the rules of 267(c)(1) or (5)) interest in the foreign partnership.

(5) *Determination of amount of interest.* Whether a person owns a fifty-percent interest, or a ten-percent interest, as described in paragraphs (b)(2) and (3) of this section, is determined for each tax year of the foreign partnership by reference to the agreement of the partners relating to such interests during that tax year.

(6) *Definition of United States person.* The term *United States person* is defined in section 7701(a)(30).

(7) *Definition of a foreign partnership.* A foreign partnership is a partnership described in section 7701(a)(5).

(8) *Tax year of a foreign partnership.* The tax year of a foreign partnership is determined under section 706.

(9) *Examples.* The rules of paragraph (a) of this section and this paragraph (b) are illustrated by the following examples:

Example 1. Sole U.S. partner does not own more than a fifty-percent interest. No United States person owns any interest (directly or constructively) in *FPS*, a foreign partnership whose tax year under section 706 is the calendar year. On January 1, 2001, *US*, a United States person with the calendar year as its tax year, contributes property to *FPS* in exchange for a 40% interest in a section 721 transaction. No United States persons acquire directly or constructively any other interests in *FPS* during *FPS*'s 2001 tax year. *US* is not a controlling fifty-percent partner during *FPS*'s 2001 tax year. *US* did not own during that tax year, either directly or constructively, more than a 50% interest in the partnership under paragraphs (b)(2) and (4) of this section. Also, *US* is not a controlling ten-percent partner; although *US* owned a 10% or greater interest, *US* persons owning at least 10% interests did not control *FPS*. Therefore, *US* does not have to file with its 2001 income tax return a Form 8865 with respect to *FPS* under section 6038. (But see section 6038B for the reporting obligations of *US* with respect to its transfer of property to *FPS* and section 6046A for the reporting obligation of *US* with respect to its acquisition of an interest in *FPS*. See also §1.6046A–1(e)(1) regarding the overlap between sections 6038B and 6046A).

Example 2. Controlling ten-percent partners. Assume the same facts as in *Example 1*. In addition, on January 1, 2002, *US1*, a United States person unrelated to *US* and a calendar year taxpayer, purchases a 15% interest in *FPS* from a foreign partner of *FPS*. Neither *US* nor *US1* is a controlling fifty-percent partner during *FPS*'s 2002 tax year because neither one owns more than a 50% percent interest in *FPS* during that year. However, *US* and *US1* are controlling ten-percent partners for that year because each owns at least a 10% interest (*US* owns a 40% interest and *US1* owns a 15% interest) and together they control *FPS* because collectively they own more than a 50% interest in *FPS*. As controlling ten-percent partners, under section 6038,

each is required to file a Form 8865 with its 2002 income tax return. (*US1* must also report its acquisition of the 15% interest in *FPS* under section 6046A on its Form 8865 filed with its 2002 income tax return.)

Example 3. Constructive ownership rules. Assume the same facts as in *Example 2*. In addition, on January 1, 2003, *US2*, a United States person and the brother of *US*, purchases 50% of the stock of *FC*, a foreign corporation. *FC* owns a 20% interest in *FPS*. Thus, under sections 6038(e)(3) and 267(c)(1), *US2* indirectly owns a 10% interest in *FPS* (10% is *US2*'s proportionate share of *FC*'s 20% interest in *FPS*), and under sections 6038(e)(3) and 267(c)(2), *US2* is attributed *US*'s 40% interest. Additionally, *US* directly owns a 40% interest in *FPS* and is attributed *US2*'s 10% interest pursuant to section 6038(e)(3) and section 267(c)(2). Therefore, *US2* is considered to own a 50% interest (10% indirectly and 40% from *US*) in *FPS*, and *US* is considered to own a 50% interest in *FPS* (40% directly and 10% from *US2*). *FPS* has no controlling fifty-percent partners, because neither *US*, *US1*, nor *US2*, owns a greater than 50% interest. However, *US*, *US1*, and *US2* are each controlling ten-percent partners and each must file Form 8865 pursuant to section 6038 for *FPS*'s 2003 tax year ending December 31, 2003. Each must attach Form 8865 to its tax return for its 2003 tax year.

Example 4. Controlling fifty-percent partners. Assume the same facts as in *Example 3*. In addition, on June 1, 2004, *US* acquires an additional 1% direct interest in *FPS*. *US* is now a controlling fifty-percent partner of *FPS*, because *US* owns a 41% interest directly and a 10% interest constructively from *US2*. *US2* is also a controlling fifty-percent partner, because *US2* owns 10% indirectly and 41% constructively from *US*. Both *US* and *US2* are required to file Form 8865 containing all the information required to be submitted by controlling fifty-percent partners. (But see paragraph (c)(1) of this section, which contains filing exceptions when there are multiple controlling fifty-percent partners). *US1* is no longer a controlling ten-percent partner because *FPS* now has at least one controlling fifty-percent partner, and *US1* does not qualify as a controlling fifty-percent partner. Therefore, *US1* is not required to file Form 8865 under section 6038.

Example 5. Constructive ownership from a nonresident alien. *US*, a United States person, does not own directly or constructively an interest in *FPS*, a foreign partnership. The tax year of *FPS* is the calendar year. *NRA*, a nonresident alien, is the mother of *US*. In 2002, *NRA* acquires a 55% interest in *FPS*. Because *US* owns neither a direct nor a constructive interest in *FPS* under sections 6038(e)(3) and 267(c)(1) or (5), *NRA*'s interest is not attributed to *US* under sections 6038(e)(3) and 267(c)(2). If in 2003 *NRA* becomes a United States person, *NRA*'s interest will be attributed to *US*. However, *US* is excused from filing Form 8865 if *US* satisfies the requirements of the constructive owners exception in paragraph (c)(2) of this section. In 2003, *NRA* is a controlling fifty-percent partner and must file a Form 8865 under section 6038 for *FPS*'s 2003 tax year.

(c) *Exceptions when more than one United States person is required to file Form 8865 pursuant to section 6038*—(1) *Multiple controlling fifty-percent partners*—(i) *In general.* If, with respect to the same foreign partnership for the same tax year, more than one United States person is a controlling fifty-percent partner, then in lieu of each controlling fifty-percent partner filing a separate Form 8865, only one Form 8865 from one of the controlling fifty-percent partners is required, provided all of the requirements of paragraph (c)(1)(ii) of this section are satisfied. A person that is a controlling fifty-percent partner solely because of an interest to which deductions or losses are allocated may file the single return only if there is no United States person that is a controlling fifty-percent partner by reason of an interest in capital or profits.

(ii) *Requirements*—(A) The person undertaking the filing obligation must file Form 8865 with that person's income tax return in the manner provided by Form 8865 and the accompanying instructions. The return must contain all of the information that would have been required to be reported by this section if each controlling fifty-percent partner had filed its own Form 8865.

(B) Any controlling fifty-percent partner not filing Form 8865 must file with its income tax return a statement titled ''Controlled Foreign Partnership Reporting'' containing the following information—

(*1*) A statement that the person qualified as a controlling fifty-percent partner, but is not submitting Form 8865 pursuant to the multiple controlling fifty-percent partners exception;

(*2*) The name, address, and taxpayer identification number (if any) of the foreign partnership of which the person qualified as a controlling fifty-percent partner;

(*3*) A representation that the filing requirement has been or will be satisfied;

(*4*) The name and address of the person filing the single return;

(*5*) The Internal Revenue Service Center where the single return is required to be filed; and

(*6*) Any additional information that Form 8865 and the accompanying instructions require.

(iii) *Penalties.* If the requirements listed in paragraph (c)(1)(ii) of this section are not satisfied, a United States person that did not file a Form 8865 pursuant to this paragraph will be subject to the penalties in paragraph (k) of this section, unless the reasonable cause provision in paragraph (k)(4) of this section is satisfied.

(2) *Certain constructive owners excepted from furnishing information*—(i) *In general.* A United States person that does not own a direct interest in the foreign partnership and that is required to file Form 8865 under this section solely by reason of constructive ownership from a United States person(s) pursuant to paragraph (b)(4) of this section (an indirect partner) is not required to file Form 8865 if all of the requirements listed in paragraph (c)(2)(ii) of this section are met.

(ii) *Requirements*—(A) The United States person(s) whose interest the indirect partner constructively owns reports all the information such person(s) is required to submit under this section, unless such person also is required to file solely by reason of constructive ownership from a United States person(s) pursuant to paragraph (b)(4) of this section, or another person reports the information pursuant to paragraph (c)(1) of this section.

(B) The indirect partner files with its income tax return a statement titled ''Controlled Foreign Partnership Reporting'' containing the following information—

(*1*) A representation that the indirect partner was required to file Form 8865, but is not doing so pursuant to the constructive owners exception;

(*2*) The names and addresses of the United States persons whose interests the indirect partner constructively owns;

(*3*) The name and address of the foreign partnership with respect to which the indirect partner would have had to have filed Form 8865 but for this exception; and

(*4*) Any additional information that Form 8865 and the accompanying instructions require.

(iii) *Penalties.* A United States person that pursuant to this paragraph (c)(2) does not file a return will be subject to the penalties in paragraph (k) of this section if the requirements listed in paragraph (c)(2)(ii) of this section are not satisfied, unless such failure is due to reasonable cause, as defined in paragraph (k)(4) of this section.

(iv) *Overlap with multiple controlling fifty-percent partners exception*—(A) If a United States person qualifies for both the exception in paragraph (c)(1) of this section and the exception in this paragraph (c)(2), such person may only utilize the multiple controlling fifty-percent partners exception in paragraph (c)(1) of this section to avoid filing Form 8865.

(B) *Example.* The following example illustrates the operation of this paragraph (c)(2)(iv):

Example. US is a U.S. citizen. *US* owns 100% of the stock of *DC*, a domestic corporation. *DC* owns a 60% direct interest in *FPS*, a foreign partnership. *DC* and *US* are the only U.S. persons that own interests directly or constructively in *FPS*. *DC* owns directly a greater than 50% interest in *FPS*. *US* constructively owns *DC*'s interest pursuant to sections 6038(e)(3) and 267(c)(1). Therefore, both *DC* and *US* are controlling fifty-percent partners. *US* qualifies for both the exception in paragraph (c)(1) of this section (multiple controlling fifty-percent partners) and the exception in paragraph (c)(2) of this section (constructive owner exception). *US* may only utilize the paragraph (c)(1) exception to avoid its filing obligation. Accordingly, *DC* may file a single Form 8865 on behalf of *US* and itself. However, that form must contain all the information that would have been submitted had *DC* and *US* each submitted a separate Form 8865.

(3) *Members of an affiliated group of corporations filing a consolidated return.* If one or more members of an affiliated group of corporations filing a consolidated return are required under section 6038 to file a Form 8865 for a particular foreign partnership, the common parent corporation may file one Form 8865 on behalf of all of the members of the group required to report under section 6038. Except with respect to group members who also qualify under the

exception in paragraph (c)(2) of this section, the Form 8865 must contain all the information that would have been required to be submitted if each group member were required to file its own Form 8865.

(d) *Exception for certain trusts.* Trusts relating to state and local government employee retirement plans are not required to report under this section, unless the instructions to Form 8865 provide otherwise.

(e) *Reporting under this section not required with respect to partnerships excluded from the application of subchapter K.* The reporting requirements of this section will not apply to any United States person in respect of an eligible partnership as described in §1.761–2(a) if such partnership has validly elected to be excluded from all of the provisions of subchapter K of chapter 1 of the Internal Revenue Code in the manner specified in §1.761–2(b)(2)(i), or such partnership is deemed to have elected to be excluded from all of the provisions of subchapter K of chapter 1 of the Internal Revenue Code in accordance with the provisions of §1.761–2(b)(2)(ii).

(f) *Period covered by return.* The information required under this section must be furnished for the tax year of the foreign partnership ending with or within the United States person's tax year. See section 706 for rules regarding tax years of partnerships.

(g) *Contents of return*—(1) *Information required to be submitted by controlling fifty-percent partners and controlling ten-percent partners.* All controlling fifty-percent partners and all controlling ten-percent partners must submit the following information on Form 8865 in the form and manner and to the extent prescribed by Form 8865 and its instructions—

(i) A statement of the income, gain, losses, deductions and credits allocated to the direct interest in the partnership of the person reporting under section 6038;

(ii) A list of all partnerships (foreign or domestic) in which the foreign partnership owned a direct interest, or owned a constructive interest of ten percent of more under the rules of section 267(c)(1) or (5), during the partnership's tax year for which the Form 8865 is being filed;

(iii) Information about all foreign entities that were disregarded as entities separate from their owner under §§301.7701–2 and 301.7701–3 that were owned by the foreign partnership during the partnership's tax year for which the Form 8865 is being filed;

(iv) A summary of the transactions that took place during the partnership's tax year between the partnership and the person filing the return, between the partnership and any other partnership of which the person filing the return is a controlling fifty-percent partner, and between the partnership and any corporation controlled (under section 6038(e)(2) and the regulations thereunder) by the person filing the return; and

(v) Any other information that Form 8865 or its accompanying instructions require to be submitted.

(2) *Additional information required to be submitted by controlling fifty-percent partners.* In addition to the information required pursuant to paragraph (g)(1) of this section, controlling fifty-percent partners must also submit the following information in the form and manner and to the extent required by Form 8865 and its instructions—

(i) A list of the names, addresses and tax identification numbers (if any) of each United States person that owned a direct interest of ten percent or more in the partnership during the partnership's tax year, and of each United States and foreign person whose interests in the partnership the controlling fifty-percent partner constructively owned under paragraph (b)(4) of this section during the partnership's tax year;

(ii) A list of transactions between the partnership and any United States person owning at the time of the transaction at least a 10-percent direct interest (as defined in paragraph (b)(3) of this section) in the foreign partnership;

(iii) A statement of the aggregate of the partners' distributive shares of items of income, gain, losses, deductions and credits;

(iv) A statement of income, gain, losses, deductions and credits allocated to each United States person holding a

direct interest in the foreign partnership of ten percent or more; and

(v) Any other information Form 8865 or its accompanying instructions require controlling fifty-percent partners to submit.

(h) *Method of reporting*. Except as otherwise provided on Form 8865 or the accompanying instructions, all amounts required to be furnished on Form 8865 must be expressed in United States dollars. All statements required on or with Form 8865 pursuant to this section must be in English.

(i) *Time and place for filing return*—(1) *In general*. Form 8865 must be filed with the United States person's income tax return on or before the due date (including extensions) of that return. If the United States person is not required to file an income tax return for its tax year with which or within which the foreign partnership's tax year ends, but is required to file an information return for that year (for example, Form 1065, ''U.S. Partnership Return of Income,'' or Form 990, ''Return of Organization Exempt from Income Tax''), the Form 8865 must be filed with the United States person's information return filed on or before the due date (including extensions) of that return.

(2) *Duplicate return*. If required by the instructions to Form 8865, a duplicate Form 8865 (including attachments and schedules) must also be filed.

(j) *Overlap with section 6031*—(1) *In general*. A partner may be required to file Form 8865 under this section and the foreign partnership in which it is a partner may also be required to file a Form 1065 under section 6031(e) for the same partnership tax year. However, if a foreign partnership completes and files Form 1065, the United States partner must use a copy of the relevant parts of Form 1065 to fulfill certain of its filing obligations under section 6038. Specifically, instead of completing the Form 8865 schedules that the person would otherwise be required to complete as a controlling fifty-percent or a controlling ten-percent partner, the person must instead attach to its Form 8865 copies of the relevant schedules from Form 1065 that the instructions to Form 8865 state are considered equivalent to schedules on Form 8865. Should a schedule on Form 8865 ask for information that is not required to be reported on the equivalent Form 1065 schedule, the partner is not required to report that information on its Form 8865 if a copy of the completed equivalent Form 1065 schedule is attached to its Form 8865. A person attaching copies of schedules from Form 1065 to its Form 8865 must still complete the parts of Form 8865 that the person is required to complete as a controlling fifty-percent partner, or a controlling ten-percent partner, and for which there is no equivalent Form 1065 schedule (for example, the first page of Form 8865).

(2) Example. The following example illustrates the application of this paragraph (j):

Example. US, a United States citizen, owns a 55% interest in *FPS*, a foreign partnership and calendar year taxpayer. Because US owns more than a 50% interest in *FPS*, *US* is a controlling fifty-percent partner of *FPS* and must file a Form 8865 with respect to *FPS*. During 2001, *FPS* earns gross income that is effectively connected with the conduct of a trade or business within the United States. Therefore, pursuant to section 6031(e)(2)(B), *FPS* must file Form 1065 for its 2001 tax year. If *FPS* completes and files Form 1065, *US* must use copies of the relevant schedules from Form 1065 to complete *US*'s Form 8865 for *FPS*'s 2001 tax year. If *FPS* instead had a September 30 tax year pursuant to section 706, then *US* must attach to its Form 1040 for *US*'s 2001 tax year a Form 8865 completed with respect to *FPS*'s tax year ending September 30, 2001. If *FPS* filed a Form 1065 for its tax year ending September 30, 2001, then *US* must use that Form 1065 to fulfill in part its reporting obligations under section 6038 by attaching the relevant schedules from the Form 1065 to *US*'s Form 8865.

(k) *Failure to comply with reporting requirement*—(1) *In general*. Any United States person required to file Form 8865 under Section 6038 and this section that fails to comply (as defined in paragraph (k)(2) of this section) with the reporting requirements of this section, will be subject to the penalties described in paragraph (k)(3) of this section.

(2) *Failure to comply*. A failure to comply is separately determined for each foreign partnership for which a United States person has a section 6038 reporting obligation. A failure to comply with the requirements of section 6038 includes the following—

(i) The failure to report at the proper time and in the proper manner any information required to be reported under the rules of this section; or

(ii) The provision of false or inaccurate information in purported compliance with the requirements of this section.

(3) *Penalties.* A United States person that fails to comply (as defined in paragraph (k)(2) of this section) with the reporting requirements of this section must pay the following penalties, subject to the reasonable cause exception in paragraph (k)(4) of this section:

(i) *Dollar amount penalty*—(A) *$10,000 penalty.* A penalty of $10,000 shall be imposed for each tax year of each foreign partnership with respect to which a failure to comply occurs.

(B) *Increase in penalty.* If a failure to comply with the applicable reporting requirements of section 6038 and this section continues for more than 90 days after the date on which the Commissioner or the Commissioner's delegate mails notice of the failure to the United States person required to file Form 8865, the person must pay an additional penalty of $10,000 for each 30-day period (or fraction thereof) during which the failure continues after the 90-day period has expired.

(C) *Limitation.* The additional penalty imposed on any United States person by section 6038(b)(2) and paragraph (k)(3)(i)(B) of this section is limited to a maximum of $50,000 for each partnership for each tax year with respect to which the failure occurs.

(ii) *Penalty of reducing foreign tax credit*—(A) *Effect on foreign tax credit.* Failure to comply with the reporting requirements of section 6038 and this section may cause a reduction of foreign tax credits under section 901 (taxes of foreign countries and of possessions of the United States). In applying section 901 to a United States person for any tax year with or within which its foreign partnership's tax year ended, the amount of taxes paid (and deemed paid under sections 902 and 960) by the United States person will be reduced by 10 percent if the person fails to comply. However, no tax deemed paid under section 904(c) will be reduced under the provisions of this paragraph (k)(3)(ii).

(B) *Reduction for continued failure.* If a failure to comply with the reporting requirements of section 6038 and this section continues for more than 90 days after the date on which the Commissioner or the Commissioner's delegate mails notice of the failure to the person required to file Form 8865, then the amount of the reduction in paragraph (k)(3)(ii)(A) of this section will be 10 percent, plus an additional 5 percent for each 3-month period (or fraction thereof) during which the failure continues after the 90-day period has expired.

(C) *Limitation on reduction.* The amount of the reduction under paragraphs (k)(3)(ii)(A) and (B) of this section for each failure to furnish information required under this section will not exceed the greater of $10,000, or the gross income of the foreign partnership for its tax year with respect to which the failure occurred.

(D) *Offset for dollar amount penalty imposed.* The total amount of the reduction which, but for this paragraph (k)(3)(ii)(D), may be made under this paragraph (k)(3)(ii) with respect to any separate failure, may not exceed the maximum amount of the reductions that may be imposed, reduced (but not below zero) by the dollar amount penalty imposed by paragraph (k)(3)(i) of this section with respect to the failure.

(4) *Reasonable cause limitation.* The time prescribed for filing a complete Form 8865, and the beginning of the 90-day period after the Commissioner or the Commissioner's delegate mails notice under paragraphs (k)(3)(i)(B) and (ii)(B) of this section, will be treated as being not earlier than the last day on which reasonable cause existed for failure to furnish the information. The United States person may show reasonable cause by providing a written statement to the Commissioner's delegate having jurisdiction over the person's return to which the Form 8865 should have been attached, setting forth the reasons for the failure to comply. Whether a failure to comply was due to reasonable cause will be determined by the Commissioner, or the Commissioner's delegate, under all the facts and circumstances.

(5) *Statute of limitations.* For exceptions to the limitations on assessment

in the event of a failure to provide information under section 6038, see section 6501(c)(8).

(l) *Effective date.* This section applies to tax years of a foreign partnership ending on or after December 31, 2000.

[T.D. 8850, 64 FR 72550, Dec. 28, 1999]

§ 1.6038A–0 Table of contents.

This section lists the captions that appear in the regulations under section 6038A.

§ 1.6038A–1 General requirements and definitions.

(a) Purpose and scope.
(b) In general.
(c) Reporting corporation.
(1) In general.
(2) 25-percent foreign-owned.
(3) 25-percent foreign shareholder.
(i) In general.
(ii) Total voting power and value.
(iii) Direct 25-percent foreign shareholder.
(iv) Indirect 25-percent foreign shareholder.
(4) Application to prior open years.
(5) Exceptions.
(i) Treaty country residents having no permanent establishment.
(ii) Qualified exempt shipping income.
(iii) Status as a foreign related party.
(d) Related party.
(e) Attribution rules.
(1) Attribution under section 318.
(2) Attribution of transactions with related parties engaged in by a partnership.
(f) Foreign person.
(g) Foreign related party.
(h) Small corporation exception.
(i) Safe harbor for reporting corporations with related party transactions of *de minimis* value.
(1) In general.
(2) Aggregate value of gross payments made or received.
(j) Related reporting corporations.
(k) Consolidated return groups.
(1) Required information.
(2) Maintenance of records and authorization of agent.
(3) Monetary penalties.
(l) District Director.
(m) Examples.
(n) Effective dates.
(1) Section 1.6038A–1.
(2) Section 1.6038A–2.
(3) Section 1.6038A–3.
(4) Section 1.6038A–4.
(5) Section 1.6038A–5.
(6) Section 1.6038A–6.
(7) Section 1.6038A–7.

§ 1.6038A–2 Requirement of return.

(a) Form 5472 required.
(1) In general.
(2) Reportable transaction.
(b) Contents of return.
(1) Reporting corporation.
(2) Related party.
(3) Foreign related party transactions for which only monetary consideration is paid or received by the reporting corporation.
(4) Foreign related party transactions involving nonmonetary consideration or less than full consideration.
(5) Additional information.
(6) Reasonable estimate.
(i) Estimate within 25 percent of actual amount.
(ii) Other estimates.
(7) Small amounts.
(8) Accrued payments and receipts.
(c) Method of reporting.
(d) Time and place for filing returns.
(e) Untimely filed return.
(f) Exceptions.
(1) No reportable transactions.
(2) Transactions solely with a domestic reporting corporation.
(3) Transactions with a corporation subject to reporting under section 6038.
(4) Transactions with a foreign sales corporation.
(g) Filing Form 5472 when transactions with related parties engaged in by a partnership are attributed to a reporting corporation.
(h) Effective dates for certain reporting corporations.

§ 1.6038A–3 Record maintenance.

(a) General maintenance requirements.
(1) Section 6001 and section 6038A.
(2) Safe harbor.
(3) Examples.
(b) Other maintenance requirements.
(1) Indirectly related records.
(2) Foreign related party or third-party maintenance.
(3) Translation of records.
(4) Exception for foreign governments.
(c) Specific records to be maintained for safe harbor.
(1) In general.
(2) Descriptions of categories of documents to be maintained.
(i) Original entry books and transaction records.
(ii) Profit and loss statements.
(iii) Pricing documents.
(iv) Foreign country and third party filings.
(v) Ownership and capital structure records.
(vi) Records of loans, services, and other non-sales transactions.
(3) Material profit and loss statements.
(4) Existing records test.
(5) Significant industry segment test.
(i) In general.
(ii) Form of the statements.
(iii) Special rule for component sales.

(iv) Level of specificity required.
(v) Examples.
(6) High profit test.
(i) In general.
(ii) Return on assets test.
(iii) Additional rules.
(7) Definitions.
(i) U.S.-connected products or services.
(ii) Industry segment.
(iii) Gross revenue of an industry segment.
(iv) Identifiable assets of an industry segment.
(v) Operating profit of an industry segment.
(vi) Product.
(vii) Related products or services.
(viii) Model.
(ix) Product line.
(8) Example.
(i) Facts.
(ii) Existing records test.
(iii) Signficant industry segments.
(iv) High profit test.
(v) Material profit and loss statements.
(d) Liability for certain partnership record maintenance.
(e) Agreements with the District Director or the Assistant Commissioner (International).
(1) In general.
(2) Content of agreement.
(i) In general.
(ii) Significant industry segment test.
(iii) Example.
(3) Circumstances of agreement.
(4) Agreement as part of APA process.
(f) U.S. maintenance.
(1) General rule.
(2) Non-U.S. maintenance requirements.
(3) Prior taxable years.
(4) Scheduled production for high volume or other reasons.
(5) Required U.S. maintenance.
(g) Period of retention.
(h) Application of record maintenance rules to banks and other financial institutions. [Reserved]
(i) Effective dates.

§ 1.6038A–4 Monetary penalty.

(a) Imposition of monetary penalty.
(1) In general.
(2) Liability for certain partnership transactions.
(3) Calculation of monetary penalty.
(b) Reasonable cause.
(1) In general.
(2) Affirmative showing required.
(i) In general.
(ii) Small corporations.
(iii) Facts and circumstances taken into account.
(c) Failure to maintain records or to cause another to maintain records.
(d) Increase in penalty where failure continues after notification.
(1) In general.
(2) Additional penalty for another failure.
(3) Cessation of accrual.
(4) Continued failures.
(e) Other penalties.
(f) Examples.
Example (1)—Failure to file Form 5472.
Example (2)—Failure to maintain records.
(g) Effective dates.

§ 1.6038A–5 Authorization of agent.

(a) Failure to authorize.
(b) Authorization by related party.
(1) In general.
(2) Authorization for prior years.
(c) Foreign affiliated groups.
(1) In general.
(2) Application of noncompliance penalty adjustment.
(d) Legal effect of authorization of agent.
(1) Agent for purposes of commencing judicial proceedings.
(2) Foreign related party found where reporting corporation found.
(e) Successors in interest.
(f) Deemed compliance.
(1) In general.
(2) Reason to know.
(3) Effect of deemed compliance.
(g) Effective dates.

§ 1.6038A–6 Failure to furnish information.

(a) In general.
(b) Coordination with treaties.
(c) Enforcement proceeding not required.
(d) *De minimis* failure.
(e) Suspension of statute of limitations.
(f) Effective dates.

§ 1.6038A–7 Noncompliance.

(a) In general.
(b) Determination of the amount.
(c) Separate application.
(d) Effective dates.

[T.D. 8353, 56 FR 28060, June 19, 1991]

§ 1.6038A–1 General requirements and definitions.

(a) *Purpose and scope.* This section and §§ 1.6038A–2 through 1.6038A–7 provide rules for certain foreign-owned U.S. corporations and foreign corporations engaged in trade or business within the United States (reporting corporations) relating to information that must be furnished, records that must be maintained, and the authorization of the reporting corporation to act as agent for related foreign persons for purposes of sections 7602, 7603, and 7604 that must be executed. Section 6038A(a) and this section require that a reporting corporation furnish certain information annually and maintain certain records relating to transactions

between the reporting corporation and certain related parties. This section also provides definitions of terms used in section 6038A. Section 1.6038A–2 provides guidance concerning the information to be submitted and the filing of the required return. Section 1.6038A–3 provides guidance concerning the maintenance of records. Section 1.6038A–4 provides guidance concerning the application of the monetary penalty for the failure either to furnish information or to maintain records. Section 1.6038A–5 provides guidance concerning the authorization of an agent for purposes of sections 7602, 7603, and 7604. Section 1.6038A–6 provides guidance concerning the failure to furnish information requested by a summons. Finally, §1.6038A–7 provides guidance concerning the application of the noncompliance penalty for failure by the related party to authorize an agent or by the reporting corporation to substantially comply with a summons.

(b) *In general*. A reporting corporation must furnish the information described in §1.6038A–2 by filing an annual information return (Form 5472 or any successor), and must maintain records as described in §1.6038A–3.

(c) *Reporting corporation*—(1) *In general*. For purposes of section 6038A, a reporting corporation is either a domestic corporation that is 25-percent foreign-owned as defined in paragraph (c)(2) of this section, or a foreign corporation that is 25-percent foreign-owned and engaged in trade or business within the United States. After November 4, 1990, a foreign corporation engaged in a trade or business within the United States at any time during a taxable year is a reporting corporation. See section 6038C.

(2) *25-percent foreign-owned*. A corporation is 25-percent foreign-owned if it has at least one direct or indirect 25-percent foreign shareholder at any time during the taxable year.

(3) *25-percent foreign shareholder*—(i) *In general*. A foreign person is a 25-percent foreign shareholder of a corporation if the person owns at least 25 percent of—

(A) The total voting power of all classes of stock of the corporation entitled to vote, or

(B) The total value of all classes of stock of the corporation.

(ii) *Total voting power and value*. In determining whether one foreign person owns 25 percent of the total voting power of all classes of stock of a corporation entitled to vote or 25 percent of the total value of all classes of stock of a corporation, consideration will be given to all the facts and circumstances of each case, under principles similar to §1.957–1(b)(2) (consideration of arrangements to shift formal voting power away from a foreign person).

(iii) *Direct 25-percent foreign shareholder*. A foreign person is a direct 25-percent foreign shareholder if it owns directly at least 25 percent of the stock of the reporting corporation, either by vote or by value.

(iv) *Indirect 25-percent foreign shareholder*. A foreign person is an indirect 25-percent foreign shareholder if it owns indirectly (or under the attribution rules of section 318 is considered to own indirectly) at least 25 percent of the stock of the reporting corporation, either by vote or by value.

(4) *Application to prior open years*. For taxable years beginning before July 11, 1989, the definition of a reporting corporation under this paragraph applies in determining whether a foreign-owned corporation is a reporting corporation. An examination may be reopened if the statute of limitations period for that taxable year has not expired. A taxable year may not be reopened under section 6038A for examination purposes if the taxable year is open under section 6511 only for purposes of the carryback of net operating losses or net capital losses.

(5) *Exceptions*—(i) *Treaty country residents having no permanent establishment*. A foreign corporation that has no permanent establishment in the United States under an applicable income tax convention is not a reporting corporation for purposes of section 6038A and this section. Accordingly, such a foreign corporation is not subject to §§1.6038A–2, 1.6038A–3, and 1.6038A–5. It must timely and fully provide the required notice to the Commissioner under section 6114. See section 6114 and the regulations thereunder for the notice that such a corporation must file

and the applicable penalties for failure to file such notice.

(ii) *Qualified exempt shipping income.* A foreign corporation whose gross income is exempt from U.S. taxation under section 883 is not a reporting corporation provided that it timely and fully complies with the reporting requirements required to claim such exemption. In the event that such a corporation does not timely and fully comply with the reporting requirements under sections 887 and 883, it will be a reporting corporation subject to section 6038A, including the application of the monetary penalty for failure to file required information.

(iii) *Status as foreign related party.* Nothing in this paragraph affects the determination of whether a person is a foreign related party as defined in paragraph (g) of this section.

(d) *Related party.* The term ''related party'' means—

(1) Any direct or indirect 25-percent foreign shareholder of the reporting corporation,

(2) Any person who is related within the meaning of sections 267(b) or 707(b)(1) to the reporting corporation or to a 25-percent foreign shareholder of the reporting corporation, or

(3) Any other person who is related to the reporting corporation within the meaning of section 482 and the regulations thereunder. However, the term ''related party'' does not include any corporation filing a consolidated federal income tax return with the reporting corporation.

(e) *Attribution rules*—(1) *Attribution under section 318.* For purposes of determining whether a corporation is 25-percent foreign-owned and whether a person is a related party under section 6038A, the constructive ownership rules of section 318 shall apply, and the attribution rules of section 267(c) also shall apply to the extent they attribute ownership to persons to whom section 318 does not attribute ownership. However, ''10 percent'' shall be substituted for ''50 percent'' in section 318(a)(2)(C), and section 318(a)(3) (A), (B), and (C) shall not be applied so as to consider a U.S. person as owning stock that is owned by a person who is not a U.S. person. Additionally, section 318(a)(3)(C) and §1.318–1(b) shall not be applied so as to consider a U.S. corporation as being a reporting corporation if, but for the application of such sections, the U.S. corporation would not be 25-percent foreign owned.

(2) *Attribution of transactions with related parties engaged in by a partnership.* The transactions in which a domestic or foreign partnership engages shall be attributed to any reporting corporation whose interest in the capital or profits of the partnership, either directly or indirectly, combined with the interests of all related parties of the reporting corporation partner, equals 25 percent or more of the total partnership interests. Attribution of such transactions shall be made only to the extent of the partnership interest held by that reporting corporation partner. See sections 875 and 702(a) and the regulations thereunder. (Attribution shall not be made however, of transactions directly between the partnership and a reporting corporation.) Accordingly, a reporting corporation partner that is deemed to engage in transactions with related parties under this rule is subject to the information reporting requirements of §1.6038A–2, to the record maintenance requirements of §1.6038A–3, to the monetary penalty under §1.6038A–4, to the requirement of authorization of agent under §1.6038A–5, to the rules of §1.6038A–6 relating to the requirement to produce records, and to the noncompliance penalty adjustment under §1.6038A–7.

(f) *Foreign person.* For purposes of section 6038A, a foreign person is—

(1) Any individual who is not a citizen or resident of the United States, but not including any individual for whom an election under section 6013 (g) or (h) (relating to an election to file a joint return) is in effect;

(2) Any individual who is a citizen of any possession of the United States and who is not otherwise a citizen or resident of the United States;

(3) Any partnership, association, company, or corporation that is not created or organized in the United States or under the law of the United States or any State thereof;

(4) Any foreign trust or foreign estate, as defined in section 7701(a)(31); or

(5) Any foreign government (or agency or instrumentality thereof). To the

extent that a foreign government is engaged in the conduct of commercial activity as defined under section 892 and the regulations thereunder, it will be treated as a foreign person under section 6038A and this section only for purposes of the information reporting requirements of § 1.6038A–2. A foreign government will not be treated as a foreign related party for purposes of §§ 1.6038A–3 and 1.6038A–5.

For purposes of section 6038A, a possession of the United States shall be considered to be a foreign country.

(g) *Foreign related party*. A foreign related party is a foreign person as defined under paragraph (f) of this section that is also a related party as defined under paragraph (d) of this section.

(h) *Small corporation exception*. A reporting corporation that has less than $10,000,000 in U.S. gross receipts for a taxable year is not subject to §§ 1.6038A–3 and 1.6038A–5 for that taxable year. Such a corporation, however, remains subject to the information reporting requirements of § 1.6038A–2 and the general record maintenance requirements of section 6001. For purposes of this paragraph, U.S. gross receipts includes all amounts received or accrued to the extent that such amounts are taken into account for the determination and computation of the gross income of the corporation. For purposes of this test, the U.S. gross receipts of all related reporting corporations shall be aggregated.

(i) *Safe harbor for reporting corporations with related party transactions of de minimis value*—(1) *In general*. A reporting corporation is not subject to §§ 1.6038A–3 and 1.6038A–5 for any taxable year in which the aggregate value of all gross payments it makes to and receives from foreign related parties with respect to related party transactions (including monetary consideration, nonmonetary consideration, and the value of transactions involving less than full consideration), is not more than $5,000,000 and is less than 10 percent of its U.S. gross income. Such a corporation, however, remains subject to the information reporting requirements of § 1.6038A–2 and the general record maintenance requirements of section 6001. For purposes of this paragraph, U.S. gross income means the gross income reportable by the reporting corporation (or the aggregate gross income reportable by all related reporting corporations) for U.S. income tax purposes. Gross payments made to or received from foreign related parties cannot be netted; rather, the gross payments made to and received from foreign related parties are to be aggregated. Thus, for example, if a reporting corporation receives $4,700,000 of gross payments from a related party and makes $500,000 of gross payments to the same related party, it has aggregate gross payments of $5,200,000, and, therefore, does not qualify for the safe harbor under this paragraph.

(2) *Aggregate value of gross payments made or received*. The aggregate value of gross payments made to (or received from) a foreign related party with respect to foreign related party transactions is determined by totaling the dollar amounts of foreign related party transactions as described in § 1.6038A–2(b) (3) and (4) on all Forms 5472 filed by the reporting corporation or related reporting corporations.

(j) *Related reporting corporations*. A reporting corporation is related to another reporting corporation if it is related to that other reporting corporation under the principles described in paragraphs (d) and (e) of this section.

(k) *Consolidated return groups*—(1) *Required information*. If a reporting corporation is a member of an affiliated group for which a U.S. consolidated income tax return is filed, the return requirement of § 1.6038A–2 may be satisfied by filing a consolidated Form 5472. The common parent, as identified on Form 851, must attach a schedule to the consolidated Form 5472 stating which members of the U.S. affiliated group are reporting corporations under section 6038A, and which of those are joining in the consolidated Form 5472. The schedule must provide the name, address, and taxpayer identification number of each member whose transactions are included on the consolidated Form 5472. A member is not required to join in filing a consolidated Form 5472 merely because other members of the group choose to file one or more Forms 5472 on a consolidated basis.

(2) *Maintenance of records and authorization of agent*. Either the common parent or the principal operating company of an affiliated group filing a consolidated income tax return may be authorized under § 1.6038A–5 to act as the agent for foreign related persons engaged in transactions with members of the group solely for purposes of section 7602, 7603, and 7604 under section 6038A(e)(1) and § 1.6038A–5. Each member of the group, however, must maintain the records required under section 6038A (a) and § 1.6038A–3 relating to its related party transactions.

(3) *Monetary penalties*. The common parent (or principal operating company) and all reporting corporations that join in the filing of a consolidated Form 5472 are liable jointly and severally for penalties for failure to file Form 5472 and for failure to mantain records under section 6038A(d) and § 1.6038A–4(e). See § 1.1502–77(a) regarding the scope of agency of the common parent corporation.

(l) *District Director*. For purposes of the regulations under section 6038A, the term ''District Director'' means any District Director, or the Assistant Commissioner (International) when performing duties similar to those of a District Director with respect to any person over which the Assistant Commissioner (International) has appropriate jurisdiction.

(m) *Examples*. The following examples illustrate the rules of this section.

Example 1. P, a U.S. partnership that is engaged in a U.S. trade or business, is 75 percent owned by FC1, a foreign corporation that, in turn, is wholly owned by another foreign corporation, FC2. The remaining 25 percent of P is owned by Corp, a domestic corporation, that is wholly owned by FC3. P engages in transactions solely with FC2 and FC3. These transactions are attributed to FC1 and Corp. Under section 875, FC1 is considered as being engaged in a U.S. trade or business. For purposes of section 6038A and this section, FC1 and Corp are reporting corporations and must report their pro rata shares of the value of the transactions with FC2 and FC3. Thus, Corp must report 25 percent of P's transactions with FC3 and FC1 must report 75 percent of P's transactions with FC2.

Example 2. FC2 and FC3 are both foreign corporations that are wholly owned by FC1, also a foreign corporation. FC2 engages in a trade or business in the United States through a branch. The branch engages in related party transactions with FC1. FC2 is a reporting corporation. FC3 is a foreign related party. FC1 is a direct 25-percent foreign shareholder of both FC2 and FC3. Neither FC1 nor FC3 is a reporting corporation.

Example 3. FC1 owns 25 percent of total voting power in each of FC2 and FC3. FC2 and FC3 each own 20 percent of the total voting power of Corp, a domestic corporation. The remaining stock of Corp is owned by an unrelated domestic corporation. Neither FC2 nor FC3 is engaged in a U.S. trade or business. Under section 318(a)(2)(C) and paragraph (e) of this section, FC1 constructively owns its proportionate share of the stock of Corp owned directly by FC2 and FC3. Thus, FCl is treated as constructively owning five percent of Corp through each of FC2 and FC3 or a total of 10 percent of the Corp stock. Consequently, Corp is not a reporting corporation because no 25 percent shareholder exists.

Example 4. FP owns 100 percent of FCl which, in turn, owns 100 percent of FC2. FC2 owns 100 percent of FC3 which owns 100 percent of RC. FP, FC1, and FC2 are indirect 25-percent foreign shareholders of RC, and FC3 is a direct 25-percent foreign shareholder.

Example 5. FP owns 100 percent of USS, a U.S. corporation, and 25 percent of FS, a foreign corporation. The remaining 75 percent of FS is publicly owned by numerous small shareholders. Sales transactions occur between USS and FS. Applying the rules of this section, USS is a reporting corporation. It is determined that USS and FS are each controlled by FP under section 482 and the regulations thereunder. Therefore, FS is related to USS within the meaning of section 482 and is a related party to USS. Accordingly, the sales transactions between USS and FS are subject to section 6038A.

Example 6. The facts are the same as in *Example 5*, except that the remaining 75 percent of FS is owned by one shareholder that is unrelated to the FP group and it is determined that FS is not controlled by FP for purposes of section 482. Under these facts, FS is not a related party of either FP or USS. Accordingly, section 6038A does not apply to the sales transactions between FS and USS.

Example 7. P, a U.S. multinational, is a holding company that wholly owns X, a U.S. operating company, which in turn wholly owns FS, a controlled foreign corporation. Applying the rule of section 318(a)(3)(C), FS is deemed to own the stock of X that is actually held by P. However, under the rules of paragraph (e) of this section, X will not be a reporting corporation by reason of section 318.

(n) *Effective dates*—(1) *Section 1.6038A–1*. Paragraphs (c) (relating to the definition of a reporting corporation), (d) (relating to the definition of a related

party), (e)(1) (relating to the application of section 318), and (f) (relating to the definition of a foreign person) of this section are effective for taxable Years beginning after July 10, 1989. The remaining paragraphs of this section are effective December 10, 1990, without regard to when the taxable year began.

(2) *Section 1.6038A–2*. Section 1.6038A–2 (relating to the requirement to file Form 5472) is generally effective for taxable years beginning after July 10, 1989. However, § 1.6038A–2 as it applies to reporting corporations whose sole trade or business in the United States is a banking, financing, or similar business as defined in § 1.864–4(c)(5)(i) is effective for taxable years beginning after December 10, 1990.

(3) *Section 1.6038A–3*. Section 1.6038A–3 (relating to the record maintenance requirement) is generally effective December 10, 1990. However, records described in § 1.6038A–3 in existence on or after March 20, 1990, must be maintained, without regard to when the taxable year to which the records relate began.

(4) *Section 1.6038A–4*. Section 1.6038A–4 (relating to the monetary penalty) is generally effective for taxable years beginning after July 10, 1989, for the failure to file Form 5472. For the failure to maintain records or the failure to produce documents under § 1.6038A–4(f)(2), the section is effective December 10, 1990, without regard to when the taxable year to which the records relate began.

(5) *Section 1.6038A–5*. Section 1.6038A–5 (relating to the authorization of agent requirement) is effective December 10, 1990, without regard to when the taxable year to which the records relate began.

(6) *Section 1.6038A–6*. Section 1.6038A–6 (relating to the failure to furnish information under a summons) is effective November 6, 1990, without regard to when the taxable year to which the summons relates began.

(7) *Section 1.6038A–7*. Section 1.6038A–7 (relating to the noncompliance penalty adjustment) is effective December 10, 1990, without regard to when the taxable year began.

[T.D. 8353, 56 FR 28061, June 19, 1991; T.D. 8353, 56 FR 41792, Aug. 23, 1991]

§ 1.6038A–2 Requirement of return.

(a) *Form 5472 required*—(1) *In general*. Each reporting corporation as defined in § 1.6038A–1(c) (or members of an affiliated group filing together as described in § 1.6038A–1(k)) shall make a separate annual information return on Form 5472 with respect to each related party as defined in § 1.6038A–1(d) with which the reporting corporation (or any group member joining in a consolidated Form 5472) has had any reportable transaction during the taxable year. The information required by section 6038A and this section must be furnished even though it may not affect the amount of any tax due under the Code.

(2) *Reportable transaction*. A reportable transaction is any transaction of the types listed in paragraphs (b) (3) and (4) of this section. However, if neither party to the transaction is a United States person as defined in section 7701(a)(30) and the transaction—

(i) Will not generate in any taxable year gross income from sources within the United States or income effectively connected, or treated as effectively connected, with the conduct of a trade or business within the United States, and

(ii) Will not generate in any taxable year any expense, loss, or other deduction that is allocable or apportionable to such income, the transaction is not a reportable transaction.

(b) *Contents of return*—(1) *Reporting corporation*. Form 5472 must provide the following information in the manner the form prescribes with respect to each reporting corporation:

(i) Its name, address (including mailing code), and U.S. taxpayer identification number; each country in which the reporting corporation files an income tax return as a resident under the tax laws of that country; its country or countries of organization, and incorporation; its total assets for U.S. reporting corporation; the places where it conducts its business; and its principal business activity.

(ii) The name, address, and U.S. taxpayer identification number, if applicable, of all its direct and indirect 25-percent foreign shareholders (for an indirect 25-percent foreign shareholder, explain the attribution of ownership);

each country in which each 25-percent foreign shareholder files an income tax return as a resident under the tax laws of that country; the places where each 25-percent shareholder conducts its business; and the country or countries of organization, citizenship, and incorporation of each 25-percent foreign shareholder.

(iii) The number of Forms 5472 filed for the taxable year and the aggregate value in U.S. dollars of gross payments as defined in § 1.6038A–1(h)(2) made with respect to all foreign related party transactions reported on all Forms 5472.

(2) *Related party*. The reporting corporation must provide information on Form 5472, set forth in the manner the form prescribes, about each related party, whether foreign or domestic, with which the reporting corporation had a transaction of the types described in paragraphs (b) (3) and (4) of this section during its taxable year, including the following information:

(i) The name, U.S. taxpayer identification number, if applicable, and address of the related party.

(ii) The nature of the reated party's business and the principal place or places where it conducts its business.

(iii) Each country in which the related party files an income tax return as a resident under the tax laws of that country.

(iv) The relationship of the reporting corporation to the related party.

(3) *Foreign related party transactions for which only monetary consideration is paid or received by the reporting corporation*. If the related party is a foreign person, the reporting corporation must set forth on Form 5472 the dollar amounts of all reportable transactions for which monetary consideration (including U.S. and foreign currency) was the sole consideration paid or received during the taxable year of the reporting corporation. The total amount of such transactions, as well as the separate amounts for each type of transaction described below, must be reported on Form 5472, in the manner the form prescribes. Where actual amounts are not determinable, a reasonable estimate (as described in paragraph (b)(6) of this section) is permitted. The types of transactions described in this paragraph are:

(i) Sales and purchases of stock in trade (inventory);

(ii) Sales and purchases of tangible property other than stock in trade;

(iii) Rents and royalties paid and received (other than amounts reported under paragraph (b)(3)(iv) of this section);

(iv) Sales, purchases, and amounts paid and received as consideration for the use of all intangible property, including (but not limited to) copyrights, designs, formulas, inventions, models, patents, processes, trademarks, and other similar intangible property rights;

(v) Consideration paid and received for technical, managerial, engineering, construction, scientific, or other services;

(vi) Commissions paid and received;

(vii) Amounts loaned and borrowed (except open accounts resulting from sales and purchases reported under other items listed in this paragraph (b)(3) that arise and are collected in full in the ordinary course of business);

(viii) Interest paid and received;

(ix) Premiums paid and received for insurance and reinsurance; and

(x) Other amounts paid or received not specifically identified in this paragraph (b)(3) to the extent that such amounts are taken into account for the determination and computation of the taxable income of the reporting corporation.

Amounts required to be reported under paragraph (b)(3)(vii) of this section shall be reported as monthly averages or outstanding balances at the beginning and end of the taxable year, as the form shall prescribe.

(4) *Foreign related party transactions involving nonmonetary consideration or less than full consideration*. If the related party is a foreign person, the reporting corporation must provide on Form 5472 a description of any reportable transaction, or group of reportable transactions, listed in paragraph (b)(3) of this section, for which any part of the consideration paid or received was not monetary consideration, or for which less than full consideration was paid or received. A description required under paragraph (b)(4) of this section

shall include sufficient information from which to determine the nature and approximate monetary value of the transaction or group of transactions, and shall include:

(i) A description of all property (including monetary consideration), rights, or obligations transferred from the reporting corporation to the foreign related party and from the foreign related party to the reporting corporation;

(ii) A description of all services performed by the reporting corporation for the foreign related party and by the foreign related party for the reporting corporation; and

(iii) A reasonable estimate of the fair market value of all properties and services exchanged, if possible, or some other reasonable indicator of value.

If, for any transaction, the entire consideration received includes both tangible and intangible property and the consideration paid is solely monetary consideration, the transaction should be reported under paragraph (b)(3) of this section if the intangible property was related and incidental to the transfer of the tangible property (for example, a right to warranty services.)

(5) *Additional information.* In addition to the information required under paragraphs (b) (3) and (4) of this section, a reporting corporation must provide on Form 5472, in the manner the form prescribes, the following information:

(i) If the reporting corporation imports goods from a foreign related party, whether the costs taken into account in computing the basis or inventory cost of such goods are greater than the costs taken into account in computing the valuation of the goods for customs purposes, adjusted pursuant to section 1059A and the regulations thereunder, and if so, the reasons for the difference.

(ii) If the costs taken into account in computing the basis or inventory cost of such goods are greater than the costs taken into account in computing the valuation of the goods for customs purposes, whether the documents supporting the reporting corporation's treatment of the items set forth in paragraph (b)(5)(i) of this section are in existence and available in the United States at the time Form 5472 is filed.

(6) *Reasonable estimate*—(i) *Estimate within 25 percent of actual amount.* Any amount reported under this section is considered to be a reasonable estimate if it is at least 75 percent and not more than 125 percent of the actual amount.

(ii) *Other estimates.* If any amount reported under this paragraph (b) of this section fails to meet the reasonable estimate test of paragraph (b)(6)(i) of this section, the reporting corporation nevertheless may show that such amount is a reasonable estimate by making an affirmative showing of relevant facts and circumstances in a written statement containing a declaration that it is made under the penalties of perjury. The District Director shall determine whether the amount reported was a reasonable estimate.

(7) *Small amounts.* If any actual amount required under this section does not exceed $50,000, the amount may be reported as ''$50,000 or less.''

(8) *Accrued payments and receipts.* For purposes of this section, in the case of an accrual basis taxpayer, the terms ''paid'' and ''received'' shall include accrued payments and receipts, respectively.

(c) *Method of reporting.* All statements required on or with the Form 5472 under this section and § 1.6038A–5 shall be in the English language. All amounts required to be reported under paragraph (b) of this section shall be expressed in United States currency, with a statement of the exchange rates used.

(d) *Time and place for filing returns.* A Form 5472 required under this section shall be filed with the reporting corporation's income tax return for the taxable year by the due date (including extensions) of that return. A duplicate Form 5472 (including any attachments and schedules) shall be filed at the same time with the Internal Revenue Service Center, Philadelphia, PA 19255.

(e) *Untimely filed return.* If the reporting corporation's income tax return is untimely filed, Form 5472 (with a duplicate to Philadelphia) nonetheless shall be timely filed at the service center where the return is due. When the income tax return is ultimately filed, a copy of Form 5472 must be attached.

(f) *Exceptions*—(1) *No reportable transactions*. A reporting corporation is not required to file Form 5472 if it has no transactions of the types listed in paragraphs (b) (3) and (4) of this section during the taxable year with any related party.

(2) *Transactions solely with a domestic reporting corporation*. If all of a foreign reporting corporation's reportable transactions are with one or more related domestic reporting corporations that are not members of the same affiliated group, the foreign reporting corporation shall furnish on Form 5472 only the information required under paragraphs (b) (1) and (2) of this section, if the domestic reporting corporations provide the information required under paragraphs (b) (3) through (5) of this section. Such a foreign reporting corporation nonetheless is subject to the record maintenance requirements of §1.6038A–3 and the requirements of §§1.6038A–5 and 1.6038A–6. The name, address, and taxpayer identification number of each domestic reporting corporation that provided such information must be indicated on Form 5472 in the space provided for the information under paragraphs (b) (1) and (2) of this section.

(3) *Transactions with a corporation subject to reporting under section 6038*. A reporting corporation is not required to make a return of information on Form 5472 with respect to a related foreign corporation for a taxable year for which a U.S. person that controls the foreign related corporation makes a return of information on Form 5471 that is required under section 6038 and this section, if that return contains information required under §1.6038–2(f)(11) with respect to the reportable transactions between the reporting corporation and the related corporation for that taxable year. Such a reporting corporation also is not subject to §§1.6038A–3 and 1.6038A–5. It remains subject to the general record maintenance requirements of section 6001.

(4) *Transactions with a foreign sales corporation*. A reporting corporation is not required to make a return of information on Form 5472 with respect to a related corporation that qualifies as a foreign sales corporation for a taxable year for which the foreign sales corporation files Form 1120–FSC.

(g) *Filing Form 5472 when transactions with related parties engaged in by a partnership are attributed to a reporting corporation*. If transactions engaged in by a partnership are attributed under §1.6038A–1(e)(2) to a reporting corporation, the reporting corporation need report on Form 5472 only the percentage of the value of the transaction or transactions equal to the percentage of its partnership interest. Thus, for example, if a partnership buys $1000 of widgets from the foreign parent of a reporting corporation whose partnership interest in the partnership equals 50 percent of the partnership interests (and the remaining 50 percent is held by unrelated parties), the reporting corporation must report $500 of purchases from a foreign related party on Form 5472.

(h) *Effective dates for certain reporting corporations*. For effective dates for this section, see §1.6038A–1(n).

[T.D. 8353, 56 FR 28063, June 19, 1991]

§ 1.6038A–3 Record maintenance.

(a) *General maintenance requirements*—(1) Section 6001 and section 6038A. A reporting corporation must keep the permanent books of account or records as required by section 6001 that are sufficient to establish the correctness of the federal income tax return of the corporation, including information, documents, or records (''records'') to the extent they may be relevant to determine the correct U.S. tax treatment of transactions with related parties. Under section 6001, the District Director may require any person to make such returns, render such statements, or keep such specific records as will enable the District Director to determine whether or not that person is liable for any of the taxes to which the regulations under part I have application. See section 6001 and the regulations thereunder. Such records must be permanent, accurate, and complete, and must clearly establish income, deductions, and credits. Additionally, in appropriate cases, such records include sufficient relevant cost data from which a profit and loss statement may be prepared for products or services transferred between a reporting corporation

and its foreign related parties. This requirement includes records of the reporting corporation itself, as well as to records of any foreign related party that may be relevant to determine the correct U.S. tax treatment of transactions between the reporting corporation and foreign related parties. The relevance of such records with respect to related party transactions shall be determined upon the basis of all the facts and circumstances. Section 6038A and this section provide detailed guidance regarding the required maintenance of records with respect to such transactions and specify penalties for noncompliance. Banks and other financial institutions shall follow the specific record maintenance rules described in paragraph (h) of this section.

(2) *Safe harbor*. A safe harbor for record maintenance is provided under paragraph (c) of this section, which sets forth detailed guidance concerning the types of records to be maintained with respect to related party transactions. The safe harbor consists of an all-inclusive list of record types that could be relevant to different taxpayers under a variety of facts and circumstances. It does not constitute a checklist of records that every reporting corporation must maintain or that generally should be requested by the Service. A specific reporting corporation is required to maintain, and the Service will request, only those records enumerated in the safe harbor (including material profit and loss statements) that may be relevant to its business or industry and to the correct U.S. tax treatment of its transactions with its foreign related parties. Accordingly, not every item listed in the safe harbor must be maintained by every reporting corporation. A corporation that maintains or causes another person to maintain the records listed in paragraph (c)(2) of this section that may be relevant to its foreign related party transactions and to its business or industry will be deemed to have met the record maintenance requirements of section 6038A.

(3) *Examples*. The following examples illustrate the rules of this paragraph.

Example 1. RC, a U.S. reporting corporation, is owned by two shareholders, F and P. F is a foreign corporation that owns 30 percent of the stock of RC. P is a domestic corporation that owns the remaining 70 percent. RC purchases tangible property from F; however, the only potential audit issue with respect to these transactions is their treatment under section 482. It is determined that F does not in fact control RC and the two corporations do not constitute a group of ''controlled taxpayers'' for purposes of section 482 and the regulations thereunder. There are no other reportable transactions between RC and F. Under §1.6038A–1(g), F is a foreign related party with respect to RC. Accordingly, RC is required to report its purchases of property from F under the reporting requirements of §1.6038A–2. Nevertheless, because section 482 is not applicable to the transactions between RC and F, the records created by F with respect to its sales to RC are not relevant for purposes of determining the correct tax treatment of these transactions. RC is required to maintain its own records of these transactions under the requirements of section 6001, but the transactions are not subject to the record maintenance requirements of this section. If, however, on audit it is determined that F does control RC, all records relevant to determining the arm's length consideration for the tangible property under section 482 will be subject to these requirements.

Example 2. FP, a foreign person, owns 30 percent of the stock of RC, a reporting corporation. The remaining 70 percent of RC stock is held by persons that are not 25-percent foreign shareholders. It is determined that FP is related to RC within the meaning of section 482 and the regulations thereunder. The only transactions between FP and RC are FP's capital contributions, dividends paid from RC to FP, and loans from FP to RC. Under section 6001, RC is required to maintain all documentation necessary to establish the U.S. tax treatment of the capital contributions, dividends, and loans. RC is not required to maintain records in other categories listed in paragraph (c)(3) of this section because they are not relevant to the transactions between FP and RC. Records of FP not related to these transactions are not subject to the record maintenance requirements under section 6038A(a) and this section.

Example 3. G, a foreign multinational group, creates Sub, a wholly-owned U.S. subsidiary, in order to purchase tangible property from unrelated parties in the United States and resell such property to G. The property purchased by Sub is either used in G's business or resold to other unrelated parties by G. Sub's sole function is to act as a buyer for G and these purchases are the only transactions that G has with any U.S. affiliates. Under all the facts and circumstances of this case, it is determined that an analysis of the group's worldwide profit attributable to the property it purchases from Sub is not

relevant for purposes of determining the tax treatment of the sales from Sub to G. Therefore, the records with respect to the profitability of G are not subject to the record maintenance requirements of this section. However, all records related to the appropriate method under section 482 for determining an arm's-length consideration for the property sold by Sub to G are subject to the record maintenance requirements of this section.

Example 4. S, a U.S. reporting corporation, is the purchasing agent for its multinational parent group. It arranges for the purchase and export of miscellaneous tangible property to X, Y, and Z, each of which is a foreign related party. The miscellaneous tangible property is purchased from unrelated third parties for resale to X, Y, and Z. These resales of miscellaneous tangible property constitute the sole transactions between S and X, Y, and Z. The purchasing agent activity of S is not an integral part of the business activity of S or of any beneficiary of the purchasing agent services provided by S as defined in §1.482–2(b)(7). Under §1.482–2(b)(7), the arm's-length charge is deemed to be equal to the costs or deductions incurred with respect to the provision of the purchasing agent services. S is required to maintain records to permit verification upon audit of such costs or deductions. The records of X, Y, and Z are not relevant to the costs or deductions incurred by S with respect to its purchasing agent activities. Therefore, under section 6038A and this section, only the records maintained by S that permit verification of the costs and deductions of the purchasing agent services are relevant. Accordingly, solely with respect to these transactions, records of X, Y, and Z need not be maintained under section 6038A or this section. If, however, upon audit, it is determined that S is not merely engaging in services not integral to its business as defined in §1.482–2(b)(7), the record maintenance requirements under section 6038A(a) and this section will be applicable to the records of S, X, Y and Z to the extent that such records are relevant for determining the correct tax treatment of transactions engaged in by X, Y, or Z with S. If S has other transactions with X, S must maintain or cause to be maintained records that may be relevant with respect to those transactions.

(b) *Other maintenance requirements*—(1) *Indirectly related records.* This section applies to records that are directly or indirectly related to transactions between the reporting corporation and any foreign related parties. An example of records that are indirectly related to such transactions is records possessed by a foreign subsidiary of a foreign related party that document the raw material or component costs of a product that is manufactured or assembled by the subsdiary and sold as a finished product by the foreign related party to the reporting corporation.

(2) *Foreign related party or third-party maintenance.* If records that are required to be maintained under this section are in the control of a foreign related party, the records may be obtained or compiled (if not already in the possession of the foreign related party or already compiled) under the direction of the reporting corporation and then maintained by the reporting corporation, the foreign related party, or a third party. Thus, for example, a foreign related party may either itself maintain such records outside the United States or permit a third party to maintain such records outside the United States, provided that the conditions described in paragraph (f) of this section are met. Upon a request for such records by the Service, a foreign related party or third party may make arrangements with the District Director to furnish the records directly, rather than through the reporting corporation.

(3) *Translation of records.* When records are provided to the Service under a request for production, any portion of such records must be translated into the English language within 30 days of a request for translation of that portion by the District Director. To the extent that any requested documents are identical to documents that have already been translated, an explanation of how such documents are identical instead may be provided. An extension of this time period may be requested under paragraph (f)(4) of this section. Appropriate extensions will be liberally granted for translation requests where circumstances warrant. If a good faith effort is made to translate accurately the requested documents within the specified time period, the reporting corporation will not be subject to the penalties in §§1.6038A–4 and 1.6038A–7.

(4) *Exception for foreign governments.* A foreign government is not subject to the obligation to maintain records under this section.

(5) *Records relating to conduit financing arrangements.* See §1.881–4 relating to conduit financing arrangements.

(c) *Specific records to be maintained for safe harbor*—(1) *In general.* A reporting corporation that maintains or causes another person to maintain the records specified in this paragraph (c) that are relevant to its business or industry and to the correct U.S. tax treatment of its transactions with its foreign related parties will deemed to have met the record maintenance requirements of this section. This paragraph provides general descriptions of the categories of records to be maintained; the particular title or label applied by a reporting corporation or related party does not control. Functional equivalents of the specified documents are acceptable. Record maintenance in accordance with this safe harbor, however, requires only the maintenance of types of documents described in paragraph (c)(2) of this section that are directly or indirectly related to transactions between the reporting corporation and any foreign related party. Additionally, to the extent the reporting corporation establishes that records in a particular category are not applicable to the industry or business of the reporting corporation and any foreign related party, maintenance of such records is not required under this paragraph. Record maintenance in accordance with this paragraph (c) generally does not require the original creation of records that are ordinarily not created by the reporting corporation or its related parties. (If, however, a document that is actually created is described in this paragraph (c), it is to be maintained even if the document is not of the type ordinarily created by the reporting corporation or its related parties.) There are two exceptions to the rule. First, basic accounting records that are sufficient to document the U.S. tax effects of transactions between related parties must be created and retained, if they do not otherwise exist. Second, records sufficient to produce material profit and loss statements as described in paragraphs (c)(2)(ii) and (3) of this section that are relevant for determining the U.S. tax treatment of transactions between the reporting corporation and foreign related parties must be created if such records are not ordinarily maintained. All internal records storage and retrieval systems used for each taxable year must be retained.

(2) *Descriptions of categories of documents to be maintained.* The following records must be maintained in order to satisfy this paragraph (c) to the extent they may be relevant to determine the correct U.S. tax treatment of transactions between the reporting corporation and any foreign related party.

(i) *Original entry books and transaction records.* This category includes books and records of original entry or their functional equivalents, however designated or labelled, that are relevant to transactions between any foreign related party and the reporting corporation. Examples include, but are not limited to, general ledgers, sales journals, purchase order books, cash receipts books, cash disbursement books, canceled checks and bank statements, workpapers, sales contracts, and purchase invoices. Descriptive material to explicate entries in the foregoing types of records, such as a chart of accounts or an accounting policy manual, is included in this category.

(ii) *Profit and loss statements.* This category includes records from which the reporting corporation can compile and supply, within a reasonable time, material profit and loss statements of the reporting corporation and all related parties as defined in §1.6038A–1(d) (the ''related party group'') that reflect profit or loss of the related party group attributable to U.S.-connected products or services as defined in paragraph (c)(7)(i) of this section. The determination of whether a profit and loss statement is material is made under the rules provided in paragraph (c)(3) of this section. The material profit and loss statements described in this paragraph (c)(2)(ii) must reflect the consolidated revenue and expenses of all members of the related party group. Thus, records in this category include the documentation of the cost of raw materials used by a related party to manufacture finished goods that are then sold by another related party to the reporting corporation. The records should be kept under U.S. generally accepted accounting principles if they

are ordinarily maintained in such manner; if not, an explanation of the material differences between the accounting principles used and U.S. generally accepted accounting principles must be made available. The statements need not reflect tracing of the actual costs borne by the group with respect to its U.S.-connected products or services; rather, any reasonable method may be used to allocate the group's worldwide costs to the revenues generated by the sales of those products or services. An explanation of the methods used to allocate specific items to a particular profit and loss statement must be made available. The explanation of material differences between accounting principles and the explanation of allocation methods must be sufficient to permit a comparison of the profitability of the group to that of the reporting corporation attributable to the provision of U.S.-connected products or services.

(iii) *Pricing documents.* This category includes all documents relevant to establishing the appropriate price or rate for transactions between the reporting corporation and any foreign related party. Examples include, but are not limited to, documents related to transactions involving the same or similar products or services entered into by the reporting corporation or a foreign related party with related and unrelated parties; shipping and export documents; commission agreements; documents relating to production or assembly facilities; third-party and intercompany purchase invoices; manuals, specifications, and similar documents relating to or describing the performance of functions conducted at particular locations; intercompany correspondence discussing any instructions or assistance relating to such transactions provided to the reporting corporations by the related foreign person (or vice versa); intercompany and intracompany correspondence concerning the price or the negotiation of the price used in such transactions; documents related to the value and ownership of intangibles used or developed by the reporting corporation or the foreign related party; documents related to cost of goods sold and other expenses; and documents related to direct and indirect selling, and general and administrative expenses (for example, relating to advertising, sales promotions, or warranties).

(iv) *Foreign country and third party filings.* This category includes financial and other documents relevant to transactions between a reporting corporation and any foreign related party filed with or prepared for any foreign government entity, any independent commission, or any financial institution.

(v) *Ownership and capital structure records.* This category includes records or charts showing the relationship between the reporting corporation and the foreign related party; the location, ownership, and status (for example, joint venture, partnership, branch, or division) of all entities and offices directly or indirectly involved in the transactions between the reporting corporation and any foreign related party; a worldwide organization chart; records showing the management structure of all foreign affiliates; and loan documents, agreements, and other documents relating to any transfer of the stock of the reporting corporation that results in the change of the status of a foreign person as a foreign related party.

(vi) *Records of loans, services, and other non-sales transactions.* This category includes relevant documents relating to loans (including all deposits by one foreign related party or reporting corporation with an unrelated party and a subsequent loan by that unrelated party to a foreign related party or reporting corporation that is in substance a direct loan between a reporting corporation and a foreign related party); guarantees of a foreign related party of debts of the reporting corporation, and vice versa; hedging arrangements or other risk shifting or currency risk shifting arrangements involving the reporting corporation and any foreign related party; security agreements between the reporting corporation and any foreign related party; research and development expense allocations between any foreign related party and the reporting corporation; service transactions between any foreign related party and the reporting corporation, including, for example, a description of the allocation of charges

for management services, time or travel records, or allocation studies; import and export transactions between a reporting corporation and any foreign related party; the registration of patents and copyrights with respect to transactions between the reporting corporation and any foreign related party: and documents regarding lawsuits in foreign countries that relate to such transactions between a reporting corporation and any foreign related party (for example, product liability suits for U.S. products).

(vii) *Records relating to conduit financing arrangements.* See §1.881–4 relating to conduit financing arrangements.

(3) *Material profit and loss statements.* For purposes of paragraph (c)(2)(ii) of this section, the determination of whether a profit and loss statement is material will be made according to the following rules. An agreement between the reporting corporation and the District Director as described in paragraph (e) of this section may identify material profit and loss statements of the related party group and describe the items to be included in any profit and loss statements for which records are to be maintained to satisfy the requirements of paragraph (c)(2)(ii) of this section. In the absence of such an agreement, a profit and loss statement will be material if it meets any of the following tests: the existing records test described in paragraph (c)(4) of this section, the significant industry segment test described in paragraph (c)(5) of this section, or the high profit test described in paragraph (c)(6) of this section.

(4) *Existing records test.* A profit and loss statement is material under the existing records test described in this paragraph (c)(4) if any member of the related party group creates or compiles such statement in the course of its business operations and the statement reflects the profit or loss of the related party group attributable to the provision of U.S.-connected products or services (regardless of whether the profit and loss attributable to U.S.-connected products or services is shown separately or included within the calculation of aggregate figures on the statement). For example, a profit and loss statement is described in this paragraph if it was produced for internal accounting or management purposes, or for disclosure to shareholders, financial institutions, government agencies, or any other persons. Such existing statements and the records from which they were complied (to the extent such records relate to profit and loss attributable to U.S.-connected products or services) are subject to the record maintenance requirements described in paragraph (c)(2)(ii) of this section.

(5) *Significant industry segment test*—(i) *In general.* A profit and loss statement is material under the significant industry segment test described in this paragraph (c)(5) if—

(A) The statement reflects the profit or loss of the related party group attributable to the group's provision of U.S.-connected products or services within a single industry segment (as defined in paragraph (c)(7)(ii) of this section);

(B) The worldwide gross revenue attributable to such industry segment is 10 percent or more of the worldwide gross revenue attributable to the group's combined industry segments; and

(C) The amount of gross revenue earned by the group from the provision of U.S.-connected products or services within such industry segment is $25 million or more in the taxable year.

(ii) *Form of the statements.* Profit and loss statements compiled for the group's provision of U.S.-connected products or services in each significant industry segment must reflect revenues and expenses attributable to the operations in such segment by all members of the related party group. Statements may show each related party's revenues and expenses separately, or may be prepared in a consolidated format. Any reasonable method may be used to allocate the group's worldwide costs within the industry segment to the U.S.-connected products or services within that segment. An explanation of the methods used to prepare consolidated statements and to allocate specific items to a particular profit and loss statement must be made available, and the records from which the consolidations and allocations were prepared must be maintained.

(iii) *Special rule for component sales.* Where the U.S.-connected products or services consist of components that are incorporated into other products or services before sale to customers, the portion of the total gross revenue derived from sales of the finished products or services attributable to the components may be determined on the basis of relative costs of production. Thus, where relevant for determining whether the $25 million threshold in paragraph (c)(5)(i)(C) of this section has been met, the amount of gross revenue derived by the related party group from the provision of the finished products or services may be reduced by multiplying it by a fraction, the numerator of which is the costs of production of the related party group attributable to the component products or services that constitute U.S.-connected products or services and the denominator of which is the costs of production of the related party group attributable to the finished products in which such components are incorporated.

(iv) *Level of specificity required.* In applying the significant industry segment test of this paragraph (c)(5), groups of related products and services must be chosen to provide a reasonable level of specificity that results in the greatest number of separate significant industry segments in comparison to other possible classifications. This determination must be made on the basis of the particular facts presented by the operations of the related party group. The following rules, however, provide general guidelines for making such classifications. First, the related party group's operations that involve the provision of U.S.-connected products should be grouped into product lines. The rules of this paragraph (c)(5) should then be applied to determine if any such product line would, standing alone, constitute a significant industry segment when compared to the related party group's operations as a whole. Any significant industry segments determined at the level of product lines should be further segregated, and tested for significant industry segments, at the level of separate products. Finally, any significant industry segments determined at the level of separate products should be segregated, and tested for significant industry segments, at the level of separate models. Similar principles should be applied in classifying and testing types of services. A profit and loss statement reflecting the related party group's provision of any product or service (or group of products or services as classified under these rules) that constitutes a significant industry segment will be considered material for purposes of this paragraph (c)(5). For definitions of the terms ''product'', ''related products or services'', ''model'', and ''product line'', see paragraph (c)(7) of this section.

(v) *Examples.* The rules for determining reasonable levels of specificity for significant industry segments may be illustrated by the following examples.

Example 1. A related party group is engaged in the manufacture and worldwide sales of automobiles and aftermarket parts. The group's operations within the categories of ''automobiles'' and ''aftermarket parts''. are each sufficient to constitute significant industry segments for the group under the rules of this paragraph (c)(5). No narrower classification of aftermarket parts results in any significant industry segments. Automobiles produced by the group are generally classified for marketing purposes by trade names; aggregating groups of automobiles by these trade names results in three significant industry segments, those for trade names A, B, and C. Finally, two car models sold under the trade name A (''A1'' and ''A2'') and one car model sold under the trade name B (''B3''), produce sufficient revenue to constitute significant industry segments. Such classifications into trade names and car models are generally used in the related party group's industry; moreover, different types of classifications would produce fewer significant industry segments. Accordingly, a reasonable level of specificity for this related party group's industry segments would be eight categories of products consisting of ''automobiles'', ''aftermarket parts'', ''A'', ''B'', ''C'', ''A1'', ''A2'', and ''B3''.

Example 2. A related party group is engaged in manufacturing electronic goods that are distributed at retail in the United States by the reporting corporation. The group sells three types of products in the United States: televisions, radios, and video cassette recorders (VCRs). Each of these three broad product areas constitutes a significant industry segment for the group as a whole. VCRs can be further segregated by price into

high-end and low-end models, and the provision of each constitutes a significant industry segment for the group. Revenues from only one VCR model, model number VCRX–10, are sufficiently large to make the provision of that model a significant industry segment. With respect to televisions, the group normally accounts for these products by size. Using this classification, portable televisions, medium-sized televisions, and consoles each constitute significant industry segments. Narrower classifications by television model numbers result in no additional significant industry segments. Finally, a single radio product line, those sold under the trade name R, produces sufficient revenue to constitute a significant industry segment, but no other radio models or product groups are large enough to constitute a significant industry segment. In each case, these classifications conform to normal business practices in the industry and result in the greatest possible number of significant industry segments for this related party group. Accordingly, a reasonable level of specificity for this related party group's industry segments would include the ten categories consisting of ''VCRs'', ''high-end VCRs'', ''low-end VCRs'', ''model number VCRX–10'', ''televisions'', ''portable televisions'', ''medium-sized televisions'', ''console televisions'', ''radios'', and ''radio trade name R''.

(6) *High profit test*—(i) *In general*. A profit and loss statement is material under the high profit test described in this paragraph (c)(6) if—

(A) The statement reflects the profit or loss of the related party group attributable to the group's provision of U.S.-connected products or services within a single industry segment (as defined in paragraph (c)(7)(ii) of this section);

(B) The amount of gross revenue earned by the group from the provision of U.S.-connected products or services within such industry segment is $100 million or more in the taxable year; and

(C) The return on assets test described in paragraph (c)(6)(ii) of this section is satisfied with respect to the products and services attributable to such segment.

Accordingly, a significant industry segment (as determined under paragraph (c)(5) of this section) must be divided into any narrower industry segments that meet the high profit test of this paragraph (c)(6), even if such narrower segments would not, standing alone, meet the significant industry segment test of paragraph (c)(5) of this section.

(ii) *Return on assets test*. An industry segment meets the return on assets test if the rate of return on assets earned by the related party group on its worldwide operations within this industry segment exceeds 15 percent, and is at least 200 percent of the return on assets earned by the group in all industry segments combined. For purposes of this paragraph, the rate of return on assets earned by an industry segment is determined by dividing that segment's operating profit (as defined in paragraph (c)(7)(v) of this section) by its identifiable assets (as defined in paragraph (c)(7)(iv) of this section).

(iii) *Additional rules*. The rules in paragraphs (c)(5)(ii) through (iv) of this section describing the application of the significant industry segment test shall apply in a similar manner for purposes of the high profit test.

(7) *Definitions*. The following definitions apply for purposes of paragraphs (c)(2)(ii), (c)(5), and (c)(6) of this section.

(i) *U.S.-connected products or services*. The term *U.S.-connected products or services* means products or services that are imported to or exported from the United States by transfers between the reporting corporation and any of its foreign related parties.

(ii) *Industry segment*. An industry segment is a segment of the related party group's combined operations that is engaged in providing a product or service or a group of related products or services (as defined in paragraph (c)(7)(vii) of this section) primarily to customers that are not members of the related party group.

(iii) *Gross revenue of an industry segment*. Gross revenue of an industry segment includes receipts (prior to reduction for cost of goods sold) both from sales to customers outside of the related party group and from sales or transfers to other industry segments within the related party group (but does not include sales or transfers between members of the related party group within the same industry segment). Interest from sources outside the related party group and interest earned on trade receivables between industry segments is included in gross

revenue if the asset on which the interest is earned is included among the industry segment's identifiable assets, but interest earned on advances or loans to other industry segments is not included.

(iv) *Identifiable assets of an industry segment*. The identifiable assets of an industry segment are those tangible and intangible assets of the related party group that are used by the industry segment, including assets that are used exclusively by that industry segment and an allocated portion of assets used jointly by two or more industry segments. The value of an identifiable asset may be determined using any reasonable method (such as book value or fair market value) applied consistently. Any allocation of assets among industry segments must be made on a reasonable basis, and a description of such basis must be provided. Assets of an industry segment that transfers products or services to another industry segment shall not be allocated to the receiving segment. Assets that represent part of the related party group's investment in an industry segment, such as goodwill, shall be included in the industry segment's identifiable assets. Assets maintained for general corporate purposes (that is, those not used in the operations of any industry segment) shall not be allocated to industry segments.

(v) *Operating profit of an industry segment*. The operating profit of an industry segment is its gross revenue (as defined in paragraph (c)(7)(iii) of this section) minus all operating expenses. None of the following shall be added or deducted in computing the operating profit of an industry segment: revenue earned at the corporate level and not derived from the operations of any industry segment; general corporate expenses; interest expense; domestic and foreign income taxes; and other extraordinary items not reflecting the ongoing business operations of the industry segment.

(vi) *Product*. The term *product* means an item of property (or combination of component parts) that is the result of a production process, is primarily sold to unrelated parties (or incorporated by the related party group into other products sold to unrelated parties), and performs a specific function.

(vii) *Related products or services*. The term *related products or services* means groupings of products and types of services that reflect reasonable accounting, marketing, or other business practices within the industries in which the related party group operates.

(viii) *Model*. The term *model* means a classification of products that incorporate particular components, options, styles, and any other unique features resulting in product differentiation. Examples of models are electronic products that are sold or accounted for under a single model number and automobiles sold under a single model name.

(ix) *Product line*. The term *product line* means a group of products that are aggregated into a single classification for accounting, marketing, or other business purposes. Examples of product lines are groups of products that perform similar functions; products that are marketed under the same trade names, brand names, or trademarks; and products that are related economically (that is, having similar rates of profitability, similar degrees of risk, and similar opportunities for growth).

(8) *Example*. The application of the rules for determining material profit and loss statements under paragraphs (c)(4) through (7) of this section is illustrated by the following example.

Example. (i) *Facts*. A multinational enterprise manufactures 50 different agricultural and chemical products that are sold through Subl, its wholly owned U.S. subsidiary, and other subsidiaries located in foreign countries. The parent company of the enterprise, P, is a foreign corporation. The corporations participating in the enterprise form a related party group, and Subl is a reporting corporation for purposes of section 6038A. Under the facts and circumstances of this case, an analysis of the group's worldwide profit attributable to its products sold in the U.S. is relevant for determining an arm's length consideration under section 482 for the transfers of goods between Subl and its foreign affiliates.

(ii) *Existing records test*. For management purposes, the group prepares profit and loss statements that are segmented by sales in different geographic markets. One of these statements shows the combined worldwide

profitability of the group. Another statement shows the profitability of the group attributable to its North American sales. Both of these profit and loss statements reflect aggregate figures that include sales to unrelated parties of products that have been transferred from P and other group members to Subl (that is, the group's ''U.S.-connected products''). The two statements meet the existing records test described in paragraph (c)(4) of this section.

(iii) *Significant industry segments.* The group's worldwide gross revenue in all industry segments is $2 billion. An analysis of the group's 50 products demonstrates that they are reasonably grouped into eight industry segments (each of which earns roughly $250 million in worldwide gross revenue). Segments 1 through 6 relate to agricultural products and Segments 7 and 8 relate to other chemical products. More specific categories would result in groupings that generate less than 10 percent of the group's worldwide gross revenue (that is, less than $200 million each); these narrower categories would thus fail the gross revenue percentage test of paragraph (c)(5)(i)(B) of this section. The gross revenue in each of the eight segments from the sale to unrelated parties of U.S.-connected products is as follows: $180 million for Segment 1; $30 million for Segment 2; and less than $25 million for each of Segments 3 through 8. Under the $25 million threshold test of paragraph (c)(5)(i)(C) of this section, the group's significant industry segments are thus limited to Segments 1 and 2. In addition, the combined operations of the group related to agricultural products (encompassing Segments 1 through 6 on an aggregated basis), constitute a single significant industry segment.

(iv) *High profit test.* One highly profitable product line within Segment 1, HPPL, accounts for $120 million gross revenue from Subl's domestic sales of U.S.-connected products (and thus exceeds the $100 million gross revenue threshold in paragraph (c)(6)(i)(B) of this section). The return on the identifiable assets attributable to the HPPL product line is 85 percent, which is more than 15 percent and more than twice the return on assets earned by the group from its worldwide operations in its combined industry segments. The group's industry segment for HPPL thus meets the high profit test described in paragraph (c)(6) of this section.

(v) *Material Profit and Loss Statements.* The group's material profit and loss statements consist of statements for combined worldwide sales and North American sales (under the existing records test); Segment 1, Segment 2, and aggregated Segments 1–6 (under the significant industry segment test); and HPPL (under the high profit test). Under paragraph (c) of this section, Subl is required to retain the combined worldwide sales and North American sales profit and loss statements and to maintain sufficient records so that it can compile and supply upon request statements of the group's profitability from sales of its U.S.-connected products within Segment l, Segment 2, aggregated Segments 1–6, and HPPL. These records need not be in the possession of Subl and may be kept under the control of and produced by P or any third party. The statements for Segment l, Segment 2, aggregated Segments 1–6, and HPPL do not require tracing of actual costs to the U.S.-connected products; rather, these statements may be prepared by using any reasonable method to allocate a portion of the industry segment's overall operating costs to the sales of U.S.-connected products within that segment.

(d) *Liability for certain partnership record maintenance.* A reporting corporation to which transactions engaged in by a partnership are attributed under § 1.6038A–1 (e)(2) is subject to the record maintenance requirements of this section to the extent of the transactions so attributed.

(e) *Agreements with the District Director*—(1) *In general.* The District Director who has audit jurisdiction over the reporting corporation may negotiate and enter into an agreement with a reporting corporation that establishes the records the reporting corporation must maintain or cause another to maintain, how the records must be maintained, the period of retention for the records, and by whom the records must be maintained in order to satisfy the reporting corporation's obligations under this section.

(2) *Content of agreement*—(i) *In general.* The agreement may include provisions relating to the authorization of agent requirement, the record maintenance requirement, and the production and translation time periods that vary the rules contained in these regulations under section 6038A. The District Director will generally require a reporting corporation to maintain only those records specified under the safe harbor provisions of paragraph (c) of this section that permit an adequate audit of the income tax return of the reporting corporation and to provide such authorizations of agent that permit adequate access to such records. In most instances, required record maintenance for a particular reporting corporation under a negotiated agreement will be less than the broad range of records described under the safe harbor

provisions. Additionally, a provision specifying the effective date and the expiration date of the agreement that may vary the effective date of the regulations may be included.

(ii) *Significant industry segment test.* A District Director may determine which industry segment profit and loss statements are material for purposes of requiring the maintenance of records (under either paragraph (a)(1) of this section or the safe harbor described in paragraph (a)(2) of this section). The industry segments that the District Director determines are material need not be the industry segments that meet the significant industry segment test under paragraph (c)(5) of this section or the high profit test under paragraph (c)(6) of this section. For this purpose, a reporting corporation will be required to maintain only those records from which profit and loss statements for the related party group may be constructed with respect to industry segments identified by the District Director. To the extent that existing profit and loss statements are similar in scope and level of detail to statements for industry segments that would otherwise be described under the tests of paragraphs (c)(5) and (6) of this section, the District Director shall accept the existing statements instead of the statements that would otherwise be required under paragraphs (c)(5) and (6) of this section.

(iii) *Example.* The following example illustrates the rules of paragraph (e)(2)(ii) of this section.

Example. The District Director determines that RC, a reporting corporation that is a manufacturer of related chemical products, has two industry segments, Segment 1 and Segment 2. While both industry segments meet the significant industry segment test of paragraph (c)(5) of this section, Segment 1 has a relatively low volume of sales to foreign related parties. Additionally, Segment 1 consists of products that produce only a small profit margin because the product is generic and other companies also sell the product. The District Director enters into an agreement with RC that requires only records from which a profit and loss statement for the related party group can be constructed for Segment 2. Therefore, RC is not required to maintain records for Segment 1 from which a profit and loss statement for the related party group can be constructed. The other record maintenance requirements under this section apply, however.

(3) *Circumstances of agreement.* The District Director generally will enter into an agreement under this paragraph (e) upon request by the reporting corporation when the District Director believes that the District has or can obtain sufficient knowledge of the business or industry of the reporting corporation to limit the record maintenance requirement to particular documents.

(4) *Agreement as part of APA process.* An agreement with a reporting corporation under this paragraph (e) may be entered into as a part of the Advance Pricing Agreement (APA) process at any time during the APA process, insofar as the agreement relates to the subject matter of the APA.

(f) *U.S. maintenance*—(1) *General rule.* Records that must be maintained under this section must be maintained within the United States, unless the conditions described in paragraph (f)(2) of this section are met.

(2) *Non-U.S. maintenance requirements.* A reporting corporation may maintain outside the United States records not ordinarily maintained in the United States but required to be maintained in the United States under this section. However, the reporting corporation must either:

(i) Deliver to the Service the original documents (or duplicates) requested within 60 days of the request by the Service for such records and provide translations of such documents within 30 days of a request for translations of specific documents; or

(ii) Move the original documents (or duplicates) requested to the United States within 60 days of the request of the Service for such records; provide the Service with an index to the requested records, the name and address of a custodian located within the United States having control over the records, and the address where the records are located within 60 days of the Service's request for the records; and continue to maintain the records within the United States throughout the period of retention described in paragraph (g) of this section. For summons procedures with respect to records that have been moved to the

United States, see sections 6038A(e), 7602, 7603, and 7604.

With respect to any material profit and loss statements required to be created (either under paragraph (c) of this section or under an agreement with the District Director), unless otherwise specified, ''120 days'' shall be substituted for ''60 days'' in this paragraph (f)(2), and labels and text with respect to such statements must be in the English language.

(3) *Prior taxable years*. The non-U.S. maintenance requirements described in paragraph (f)(2) of this section apply to records located outside the United States that were in existence on or after March 20, 1990, without regard to the taxable year to which such records relate.

(4) *Scheduled production for high volume or other reasons*. Upon a written request, for good cause shown, the District Director may grant an extension of the time for the production or translation of the requested documents. Such requests should be made within 30 days of the request for records by the Service. If an extension is needed because of the volume of records requested or the amount of translation requested, the District Director may allow production or translation to be scheduled over a period of time so that not all records need be produced or translated at the same time.

(5) *Required U.S. maintenance*. The District Director (with the concurrence of the Assistant Commissioner (International)), may require, for cause, the maintenance within the United States of any records specified in paragraph (f)(1) of this section. Such a requirement will be imposed only if there exists a clear pattern of failure to maintain or timely produce the required records. The assessment of a monetary penalty under section 6038A(d) and §1.6038A–4 for failure to maintain records is not necessarily sufficient to require the maintenance of records within the United States.

(g) *Period of retention*. Records required to be maintained by section 6038A(a) and this section shall be kept as long as they may be relevant or material to determining the correct tax treatment of any transaction between the reporting corporation and a related party, but in no case less than the applicable statute of limitations on assessment and collection with respect to the taxable year in which the transaction or item to which the records relate affects the U.S. tax liability of the reporting corporation. *See* section 6001 and the regulations thereunder.

(h) *Application of record maintenance rules to banks and other financial institutions*. [Reserved].

(i) *Effective dates*. For effective dates for this section, see §1.6038A–1(n).

[T.D. 8353, 56 FR 28065, June 19, 1991; T.D. 8353, 56 FR 41792, Aug. 23, 1991, as amended by T.D. 8611, 60 FR 41015, Aug. 11, 1995]

§1.6038A–4 Monetary penalty.

(a) *Imposition of monetary penalty*—(1) *In general*. If a reporting corporation fails to furnish the information described in §1.6038A–2 within the time and manner prescribed in §1.6038A–2 (d) and (e), fails to maintain or cause another to maintain records as required by §1.6038A–3, or (in the case of records maintained outside the United States) fails to meet the non-U.S. record maintenance requirements within the applicable time prescribed in §1.6038A–3(f), a penalty of $10,000 shall be assessed for each taxable year with respect to which such failure occurs. Such a penalty may be imposed by the District Director or the Director of the Internal Revenue Service Center where the Form 5472 is filed. The filing of a substantially incomplete Form 5472 constitutes a failure to file Form 5472. Where, however, the information described in §1.6038A–2 (b)(3) through (5) is not required to be reported, a Form 5472 filed without such information is not a substantially incomplete Form 5472.

(2) *Liability for certain partnership transactions*. A reporting corporation to which transactions engaged in by a partnership are attributed under §1.6038A–1(e)(2) is subject to the rules of this section to the extent failures occur with respect to the partnership transactions so attributed.

(3) *Calculation of monetary penalty*. If a reporting corporation fails to maintain records as required by §1.6038A–3 of transactions with multiple related parties, the monetary penalty may be assessed for each failure to maintain

records with respect to each related party. The monetary penalty, however, shall be imposed on a reporting corporation only once for a taxable year with respect to each related party for a failure to furnish the information required on Form 5472, for a failure to maintain or cause another to maintain records, or for a failure to comply with the non-U.S. maintenance requirements described in §1.6038A–3(f). An additional penalty for another failure may be imposed, however, under the rules of paragraph (d)(2) of this section. Thus, unless such failures continue after notification as described in paragraph (d) of this section, the maximum penalty under this paragraph with respect to each related party for all such failures in a taxable year is $10,000. The members of a group of corporations filing a consolidated return are jointly and severally liable for any monetary penalty that may be imposed under this section.

(b) *Reasonable cause*—(1) *In general.* Certain failures may be excused for reasonable cause, including not timely filing Form 5472, not maintaining or causing another to maintain records as required by §1.6038A–3, and not complying with the non-U.S. maintenance requirements described in §1.6038A–3(f). If an affirmative showing is made that the taxpayer acted in good faith and there is reasonable cause for a failure that results in the assessment of the monetary penalty, the period during which reasonable cause exists shall be treated as beginning on the day reasonable cause is established and ending not earlier than the last day on which reasonable cause existed for any such failure. Additionally, the beginning of the 90-day period after mailing of a notice by the District Director or the Director of an Internal Revenue Service Center of a failure described in paragraph (d) of this section shall be treated as not earlier than the last day on which reasonable cause existed.

(2) *Affirmative showing required*—(i) *In general.* To show that reasonable cause exists for purposes of paragraph (b)(1) of this section, the reporting corporation must make an affirmative showing of all the facts alleged as reasonable cause for the failure in a written statement containing a declaration that it is made under penalties of perjury. The statement must be filed with the District Director (in the case of failure to maintain or furnish requested information permitted to be maintained outside the United States within the time required under §1.6038A–3(f) or a failure to file Form 5472) or the Director of the Internal Revenue Service Center where the Form 5472 is required to be filed (in the case of failure to file Form 5472). The District Director or the Director of the Internal Revenue Service Center where the Form 5472 is required to be filed, as appropriate, shall determine whether the failure was due to reasonable cause, and if so, the period of time for which reasonable cause existed. If a return has been filed as required by §1.6038A–2 or records have been maintained as required by §1.6038A–3, except for an omission of, or error with respect to, some of the information required or a record to be maintained, the omission or error shall not constitute a failure for purposes of section 6038A(d) if the reporting corporation that filed the return establishes to the satisfaction of the District Director or the Director of the Internal Revenue Service Center that it has substantially complied with the filing of Form 5472 or the requirement to maintain records.

(ii) *Small corporations.* The District Director shall apply the reasonable cause exception liberally in the case of a small corporation that had no knowledge of the requirements imposed by section 6038A; has limited presence in and contact with the United States; and promptly and fully complies with all requests by the District Director to file Form 5472, and to furnish books, records, or other materials relevant to the reportable transaction. A small corporation is a corporation whose gross receipts for a taxable year are $20,000,000 or less.

(iii) *Facts and circumstances taken into account.* The determination of whether a taxpayer acted with reasonable cause and in good faith is made on a case-by-case basis, taking into account all pertinent facts and circumstances. Circumstances that may indicate reasonable cause and good faith include an honest misunderstanding of fact or law

that is reasonable in light of the experience and knowledge of the taxpayer. Isolated computational or transcriptional errors generally are not inconsistent with reasonable cause and good faith. Reliance upon an information return or on the advice of a professional (such as an attorney or accountant) does not necessarily demonstrate reasonable cause and good faith. Similarly, reasonable cause and good faith is not necessarily indicated by reliance on facts that, unknown to the taxpayer, are incorrect. Reliance on an information return, professional advice or other facts, however, constitutes reasonable cause and good faith if, under all the circumstances, the reliance was reasonable. A taxpayer, for example, may have reasonable cause for not filing a Form 5472 or for not maintaining records under section 6038A if the taxpayer has a reasonable belief that it is not owned by a 25-percent foreign shareholder. A reasonable belief means that the taxpayer does not know or has no reason to know that it is owned by a 25-percent foreign shareholder. For example, a reporting corporation would not know or have reason to know that it is owned by a 25-percent foreign shareholder if its belief that it is not so owned is consistent with other information reported or otherwise furnished to or known by the reporting corporation. A taxpayer may have reasonable cause for not treating a foreign corporation as a related party for purposes of section 6038A where the foreign corporation is a related party solely by reason of § 1.6038A–1(d)(3) (under the principles of section 482), and the taxpayer had a reasonable belief that its relationship with the foreign corporation did not meet the standards for related parties under section 482.

(c) *Failure to maintain records or to cause another to maintain records.* A failure to maintain records or to cause another to maintain records is determined by the District Director upon the basis of the reporting corporation's overall compliance (including compliance with the non-U.S. maintenance requirements under § 1.6038A–3(f)(2)) with the record maintenance requirements. It is not an item-by-item determination. Thus, for example, a failure to maintain a single or small number of items may not constitute a failure for purposes of section 6038A(d), unless the item or items are essential to the correct determination of transactions between the reporting corporation and any foreign related parties. The District Director shall notify the reporting corporation in writing of any determination that it has failed to comply with the record maintenance requirement.

(d) *Increase in penalty where failure continues after notification*—(1) *In general.* If any failure described in this section continues for more than 90 days after the day on which the District Director or the Director of the Internal Revenue Service Center where the Form 5472 is required to be filed mails notice of the failure to the reporting corporation, the reporting corporation shall pay a penalty (in addition to the penalty described in paragraph (a) of this section) of $10,000 with respect to each related party for which a failure occurs for each 30-day period during which the failure continues after the expiration of the 90-day period. Any uncompleted fraction of a 30-day period shall count as a 30-day period for purposes of this paragraph (d).

(2) *Additional penalty for another failure.* An additional penalty for a taxable year may be imposed, however, if at a time subsequent to the time of the imposition of the monetary penalty described in paragraph (a) of this section, a second failure is determined and the second failure continues after notification under paragraph (d)(1) of this section. Thus, if a taxpayer fails to file Form 5472 and is assessed a monetary penalty and later, upon audit, is determined to have failed to maintain records, an additional penalty for the failure to maintain records may be assessed under the rules of this paragraph if the failure to maintain records continues after notification under this paragraph.

(3) *Cessation of accrual.* The monetary penalty will cease to accrue if the reporting corporation either files Form 5472 (in the case of a failure to file Form 5472), furnishes information to substantially complete Form 5472, or demonstrates compliance with respect to the maintenance of records (in the

case of a failure to maintain records) for the taxable year in which the examination occurs and subsequent years to the satisfaction of the District Director. The monetary penalty also will cease to accrue if requested information, documents, or records, kept outside the United States under the requirements of § 1.6038A–3(f) and not produced within the time specified are produced or moved to the United States under the rules of paragraph (f)(2)(ii) of this section.

(4) *Continued failures*. If a failure under this section relating to a taxable year beginning before July 11, 1989 occurs, and if the failure continues following 90 days after the notice of failure under this paragraph is sent, the amount of the additional penalty to be assessed under this paragraph is $10,000 for each 30-day period beginning after November 5, 1990, during which the failure continues. There is no limitation on the amount of the monetary penalty that may be assessed after November 5, 1990.

(e) *Other penalties*. For criminal penalties for failure to file a return and filing a false or fraudulent return, see sections 7203 and 7206 of the Code. For the penalty relating to an underpayment of tax, see section 6662.

(f) *Examples*. The following examples illustrate the rules of this section.

Example 1 Failure to file Form 5472. Corp X, a U.S. reporting corporation, engages in related party transactions with FC. Corp X does not timely file a Form 5472 or maintain records relating to the transactions with FC for Year 1 or subsequent years. The Service Center with which Corp X files its income tax return imposes a $10,000 penalty for each of Years 1, 2, and 3 under section 6038A (d) and this section for failure to provide information as required on Form 5472 and mails a notice of failure to provide inrormation. Corp X does not file Form 5472. Ninety days following the mailing of the notice of failure to Corp X an additional penaly of $10,000 is imposed. On the 135th day following the mailing of the notice of failure, Corp X files Form 5472 for Years 1, 2, and 3. The total penalty owed by Corp X for Year 1 is $30,000. ($10,000 for not timely filing Form 5472, $10,000 for the first 30-day period following the expiration of the 90-day period, and $10,000 for the fraction of the second 30-day period). The penalty for Years 2 and 3 for the failure to file Form 5472 is also $30,000 for each year, calculated in the same manner as for Year 1. The total penalty for failure to file Form 5472 for Years 1, 2, and 3 is $90,000.

Example 2 Failure to maintain records. Assume the same facts as in *Example 1*. In Year 5, Corp X is audited for Years 1 through 3. Corp X has not been maintaining records relating to the transactions with FC. The District Director issues a notice of failure to maintain records. Corp X has already been subject to the monetary penalty of $10,000 for each of Years 1, 2, and 3 for failure to file Form 5472 and, therefore, a monetary penalty under paragraph (a) of this section for failure to maintain records is not assessed. However, an additional penalty is assessed after the 90th day following the mailing of the notice of failure to maintain records. Corp X develops a record maintenance system as required by section 6038A and § 1.6038A–3. On the 180th day following the mailing of the notice of failure to maintain records, Corp X demonstrates to the satisfaction of the District Director that the newly developed record maintenance system will comply with the requirements of § 1.6038A–3 and the increase in the monetary penalty after notification ceases to accrue. The additional penalty for failure to maintain records is $30,000. An additional penalty of $30,000 per year is assessed for each of years 2 and 3 for the failure to maintain records for a total of $90,000.

(g) *Effective dates*. For effective dates for this section, see § 1.6038A–1(n).

[T.D. 8353, 56 FR 28072, June 19, 1991]

§ 1.6038A–5 Authorization of agent.

(a) *Failure to authorize*. The rules of § 1.6038A–7 shall apply to any transaction between a foreign related party and a reporting corporation (including any transaction engaged in by a partnership that is attributed to the reporting corporation under § 1.6038A–1(e)(2)), unless the foreign related party authorizes (in the manner described in paragraph (b) of this section) the reporting corporation to act as its limited agent solely for purposes of sections 7602, 7603, and 7604 with respect to any request by the Service to examine records or produce testimony that may be relevant to the tax treatment of such a transaction or with respect to any summons by the Service for such records or testimony. The fact that a reporting corporation is authorized to act as an agent for a foreign related party is to be disregarded for purposes of determining whether the foreign related party either has a trade or business in the United States for purposes

of the Code or a permanent establishment or fixed base in the United States for purposes of an income tax treaty.

(b) *Authorization by related party*—(1) *In general*. Upon request by the Service, a foreign related party shall authorize as its agent (solely for purposes of sections 7602, 7603, and 7604) the reporting corporation with which it engages in transactions. The authorization must be signed by the foreign related party or an officer of the foreign related party possessing the authority to authorize an agent for purposes of Rule 4 of the Federal Rules of Civil Procedure. The reporting corporation will accept this appointment by providing a statement to that effect, signed by an officer of the reporting corporation possessing the authority to accept such an appointment. The agency shall be effective at all times. For taxable years beginning after July 10, 1989, the authorization and acceptance must be provided to the Service within 30 days of a request by the Service to the reporting corporation for such an authorization. The authorization must contain a heading and statement as set forth below. A foreign government is not subject to the authorization of agent requirement.

AUTHORIZATION OF AGENT

''[Name of foreign related party] hereby expressly authorizes [name of reporting corporation] to act as its agent solely for purposes of sections 7602, 7603, and 7604 of the Internal Revenue Code with respect to any request to examine records or produce testimony that may be relevant to the U.S. income tax treatment of any transaction between [name of the above-named foreign related party] and [name of reporting corporation] or with respect to any summons for such records or testimony.

Signature of or for [name of foreign related party]

(Title)

(Date)

(If signed by a corporate officer, partner, or fiduciary on behalf of a foreign related party: I certify that I have the authority to execute this authorization of agent to act on behalf of [name of foreign related party]).

Type or print your name below if signing for a foreign related party that is not an individual.

[Name of reporting corporation] accepts this appointment to act as agent for [name of foreign related party] for the above purpose.

Signature for (Name of Reporting Corporation]

(Title)

(Date)

I certify that I have the authority to accept this appointment to act as agent on behalf of (name of foreign related party] and agree to accept service of process for the above purposes.

Type or print your name below.

(2) *Authorization for prior years*. A foreign related party shall authorize a reporting corporation to act as its agent with respect to taxable years for which a Form 5472 is required to be filed prior to the date on which the final regulations under section 6038A are published by providing the above executed authorization of agent within 30 days of a request by the Service for such an authorization.

(c) *Foreign affiliated groups*—(1) *In general*. A foreign corporation that has effective legal authority to make the authorization of agent under paragraph (b) of this section on behalf of any group of foreign related parties may execute such an authorization for any members of the group. A single authorization may be made on a consolidated basis. In such a case, the common parent must attach a schedule to the authorization of agent stating which members of the group would otherwise be required to separately authorize the reporting corporation as agent. The schedule must provide the name, address, relationship to the reporting corporation, and U.S. taxpayer identification number, if applicable, of each member.

(2) *Application of noncompliance penalty adjustment*. In circumstances where a consolidated authorization of agent has been executed, if the agency authorization for any member of the group is not legally effective for purposes of sections 7602, 7603, and 7604, the noncompliance penalty adjustment under section 6038A(e) and § 1.6038A–7 shall apply.

(d) *Legal effect of authorization of agent.* The legal consequences of a foreign related party authorizing a reporting corporation to act as its agent for purposes of sections 7602, 7603, and 7604 of the Code are as follows.

(1) *Agent for purposes of commencing judicial proceedings.* A reporting corporation that is authorized by a foreign related party to act as its agent for purposes of sections 7602, 7603, and 7604 (including service of process) is also the agent of the foreign related party for purposes of—

(i) The filing of a petition to quash under section 6038A(e)(4)(A) or a petition to review an Internal Revenue Service determination of noncompliance under section 6038A(e)(4)(B), and

(ii) The commencement of a judicial proceeding to enforce a summons under section 7604, whether commenced in conjunction with a petition to quash under section 6038A(e)(4)(A) or commenced as a separate proceeding in the federal district court for the district in which the person to whom the summons is issued resides or is found.

(2) *Foreign related party found where reporting corporation found.* For any purposes relating to sections 7602, 7603, or 7604 (including service of process), a foreign related party that authorizes a reporting corporation to act on its behalf under section 6038A(e)(1) and this section may be found anywhere where the reporting corporation has residence or is found.

(e) *Successors in interest.* A successor in interest to a related party must execute the authorization of agent as described in paragraph (b) of this section.

(f) *Deemed compliance*—(1) *In general.* In exceptional circumstances, the District Director may treat a reporting corporation as authorized to act as agent for a related party for purposes of sections 7602, 7603, and 7604 in the absence of an actual agency appointment by the foreign related party, in circumstances where the actual absence of an appointment is reasonable. Factors to be considered include—

(i) If neither the reporting corporation nor the other party to the transaction knew or had reason to know that the two parties were related at the time of the transaction, and

(ii) The extent to which the taxpayer establishes to the satisfaction of the District Director that all transactions between the reporting corporation and the related party were on arm's length terms and did not involve the participation of any known related party.

(2) *Reason to know.* Whether the reporting corporation or other party had reason to know that the two parties were related at the time of the transaction will be determined by all the facts and circumstances.

(3) *Effect of deemed compliance.* If a reporting corporation is deemed under this paragraph (f) to have been authorized to act as an agent for a foreign related party for purposes of sections 7602, 7603, and 7604, such deemed compliance is applicable only for that particular transaction and other reportable transactions entered into prior to the time when the reporting corporation knew or had reason to know that the related party, in fact, was related. The noncompliance rule of §1.6038A–7 shall apply to any transaction subsequent to that time with the same related party, unless the related party actually authorizes the reporting corporation to act as its agent under paragraph (a) of this section. In addition, the record maintenance requirements of §1.6038A–3 will apply to all subsequent transactions and, with respect to prior transactions, will apply to relevant records in existence at the time the relationship was discovered.

(g) *Effective dates.* For effective dates for this section, see §1.6038A–1(n).

[T.D. 8353, 56 FR 28073, June 19, 1991; T.D. 8353, 56 FR 41792, Aug. 23, 1991]

§1.6038A–6 Failure to furnish information.

(a) *In general.* The rules of §1.6038A–7 may be applied with respect to a transaction between a foreign related party and the reporting corporation (including any transaction engaged in by a partnership that is attributed to the reporting corporation under §1.6038A–1(e)(2)) if a summons is issued to the reporting corporation to produce any records or testimony, either directly or as agent for such related party, to determine the correct treatment under title 1 of the Code of such a transaction

between the reporting corporation and the related party; and if—

(1)(i) The summons is not quashed in a proceeding, if any, begun under section 6038A(e)(4) and is not determined to be invalid in a proceeding, if any, begun under section 7604 to enforce such summons; and

(ii) The reporting corporation does not substantially and timely comply with the summons, and the District Director has sent by certified or registered mail a notice under section 6038A(e)(2)(C) to the reporting corporation that it has not so complied; or

(2) The reporting corporation fails to maintain or to cause another to maintain records as required by § 1.6038A–3, and by reason of that failure, the summons is quashed in a proceeding under section 6038A(e)(4) or in a proceeding begun under section 7604 to enforce the summons, or the reporting corporation is not able to provide the records requested in the summons.

(b) *Coordination with treaties.* Where records of a related party are obtainable on a timely and efficient basis under information exchange procedures provided under a tax treaty or tax information exchange agreement (TIEA), the Service generally will make use of such procedures before issuing a summons. The absence or pendency of a treaty or TIEA request may not be asserted as grounds for refusing to comply with a summons or as a defense against the assertion of the noncompliance penalty adjustment under § 1.6038A–7. For purposes of this paragraph, information is available on a timely and efficient basis if it can be obtained within 180 days of the request.

(c) *Enforcement proceeding not required.* The District Director is not required to begin an enforcement proceeding to enforce the summons in order to apply the rules of § 1.6038A–7.

(d) *De minimis failure.* Where a reporting corporation's failure to comply with the requirement to furnish information under this section is *de minimis,* the District Director, in the exercise of discretion, may choose not to apply the noncompliance penalty. Thus, for example, in cases where a particular document or group of documents is not furnished upon request or summons, the District Director (in the District Director's sole discretion), may choose not to apply the noncompliance penalty if the District Director deems the document or documents not to have significant or sufficient value in the determination of the correctness of the tax treatment of the related party transaction.

(e) *Suspension of statute of limitations.* If the reporting corporation brings an action under section 6038A(e)(4)(A) (proceeding to quash) or (e)(4)(B) (review of secretarial determination of noncompliance), the running of any period of limitation under section 6501 (relating to assessment and collection of tax) or under section 6531 (relating to criminal prosecutions) for the taxable year or years to which the summons that is the subject of such proceeding relates shall be suspended for the period during which such proceeding, and appeals therein, are pending. In no event shall any such period expire before the 90th day after the day on which there is a final determination in such proceeding.

(f) *Effective dates.* For effective dates for this section, see § 1.6038A–1(n).

[T.D. 8353, 56 FR 28075, June 19, 1991]

§ 1.6038A–7 Noncompliance.

(a) *In general.* In the case of any failure described in § 1.6038A–5 or § 1.6038A–6, the rules of this § 1.6038A–7 apply to the reporting corporation. In such a case—

(1) The amount of the deduction allowed under subtitle A for any amount paid or incurred by the reporting corporation to the related party in connection with such transaction, and

(2) The cost to the reporting corporation of any property acquired in such transaction from the related party or transferred by such corporation in such transaction to the related party, may be determined by the District Director.

(b) *Determination of the amount.* The amount of the deduction or the cost to the reporting corporation shall be the amount determined by the District Director (in the District Director's sole discretion) from the District Director's own knowledge or from such information as the District Director may choose to obtain through testimony or otherwise. The District Director shall consider any information or materials

that have been submitted by the reporting corporation or a foreign related party. The District Director, however, may disregard any information, documents, or records submitted by the reporting corporation or the related party if (in the District Director's sole discretion) the District Director deems that they are insufficiently probative of the relevant facts.

(c) *Separate application*. If the noncompliance penalty of this section applies with respect to transactions with a related party of the reporting corporation, it will not be applied with respect to any other related parties of the reporting corporation solely upon the basis of that failure. Thus, for example, if a reporting corporation engages in transactions with related party A and related party B, and the reporting corporation does not respond to a summons for records related to the transactions between the reporting corporation and related party A, the noncompliance penalty imposed as a result of such failure will not apply to the transactions between the reporting corporation and related party B. If a separate summons is issued for records relating to the transactions between the reporting corporation and related party B and the reporting corporation does not produce such records, the noncompliance penalty may be applied to those transactions.

(d) *Effective dates*. For effective dates for this section, see § 1.6038A–1(n).

[T.D. 8353, 56 FR 28075, June 19, 1991]

§ 1.6038B–1 Reporting of certain transfers to foreign corporations.

(a) *Purpose and scope*. This section sets forth information reporting requirements under section 6038B concerning certain transfers of property to foreign corporations. Paragraph (b) of this section provides general rules explaining when and how to carry out the reporting required under section 6038B with respect to the transfers to foreign corporations. Paragraph (c) of this section and § 1.6038B–1T(d) specify the information that is required to be reported with respect to certain transfers of property that are described in section 6038B(a)(1)(A) and 367(d), respectively. Section 1.6038B–1(e) describes the filing requirements for property transfers described in section 367(e). Paragraph (f) of this section sets forth the consequences of a failure to comply with the requirements of section 6038B and this section. For effective dates, see paragraph (g) of this section. For rules regarding transfers to foreign partnerships, see section 6038B(a)(1)(B) and any regulations thereunder.

(b) *Time and manner of reporting*—(1) *In general*— (i) *Reporting procedure*. Except for stock or securities qualifying under the special reporting rule of paragraph (b)(2) of this section, and certain exchanges described in section 354 (listed below), any U.S. person that makes a transfer described in section 6038B(a)(1)(A), 367(d) or (e), is required to report pursuant to section 6038B and the rules of this section and must attach the required information to Form 926, ''Return by Transferor of Property to a Foreign Corporation.'' For special rules regarding cash transfers made in tax years beginning after February 5, 1999, see paragraphs (b)(3) and (g) of this section. For purposes of determining a U.S. transferor that is subject to section 6038B, the rules of § 1.367(a)–1T(c) and § 1.367(a)–3(d) shall apply with respect to a transfer described in section 367(a), and the rules of § 1.367(a)–1T(c) shall apply with respect to a transfer described in section 367(d). Additionally, if in an exchange described in section 354, a U.S. person exchanges stock of a foreign corporation in a reorganization described in section 368(a)(1)(E), or a U.S. person exchanges stock of a domestic or foreign corporation for stock of a foreign corporation pursuant to an asset reorganization described in section 368(a)(1)(C), (D), or (F), that is not treated as an indirect stock transfer under section 367(a), then the U.S. person exchanging stock is not required to report under section 6038B. Notwithstanding any statement to the contrary on Form 926, the form and attachments must be attached to, and filed by the due date (including extensions) of, the transferor's income tax return for the taxable year that includes the date of the transfer (as defined in § 1.6038B–1T(b)(4)). Any attachment to Form 926 required under the rules of this section is filed subject to the transferor's declaration under penalties of perjury on Form 926 that the

information submitted is true, correct, and complete to the best of the transferor's knowledge and belief.

(ii) *Reporting by corporate transferor*. If the transferor is a corporation, Form 926 must be signed by an authorized officer of the corporation. If, however, the transferor is a member of an affiliated group under section 1504(a)(1) that files a consolidated Federal income tax return, but the transferor is not the common parent corporation, an authorized officer of the common parent corporation must sign Form 926.

(iii) *Transfers of jointly-owned property*. If two or more persons transfer jointly-owned property to a foreign corporation in a transfer with respect to which a notice is required under this section, then each person must report with respect to the particular interest transferred, specifying the nature and extent of the interest. However, a husband and wife who jointly file a single Federal income tax return may file a single Form 926 with their tax return.

(2) *Exceptions and special rules for transfers of stock or securities under section 367(a)*—(i) *Transfers on or after July 20, 1998*. A U.S. person that transfers stock or securities on or after July 20, 1998 in a transaction described in section 6038B(a)(1)(A) will be considered to have satisfied the reporting requirement under section 6038B and paragraph (b)(1) of this section if either—

(A) The U.S. transferor owned less than 5 percent of both the total voting power and the total value of the transferee foreign corporation immediately after the transfer (taking into account the attribution rules of section 318 as modified by section 958(b)), and either:

(*1*) The U.S. transferor qualified for nonrecognition treatment with respect to the transfer (i.e., the transfer was not taxable under §§ 1.367(a)–3(b) or (c)); or

(*2*) The U.S. transferor is a tax-exempt entity and the income was not unrelated business income; or

(*3*) The transfer was taxable to the U.S. transferor under § 1.367(a)–3(c), and such person properly reported the income from the transfer on its timely-filed (including extensions) Federal income tax return for the taxable year that includes the date of the transfer; or

(*4*) The transfer is considered to be to a foreign corporation solely by reason of § 1.83–6(d)(1) and the fair market value of the property transferred did not exceed $100,000; or

(B) The U.S. transferor owned 5 percent or more of the total voting power or the total value of the transferee foreign corporation immediately after the transfer (taking into account the attribution rules of section 318 as modified by section 958(b)) and either:

(*1*) The transferor (or one or more successors) properly entered into a gain recognition agreement under § 1.367(a)–8; or

(*2*) The transferor is a tax-exempt entity and the income was not unrelated business income; or

(*3*) The transferor properly reported the income from the transfer on its timely-filed (including extensions) Federal income tax return for the taxable year that includes the date of the transfer; or

(*4*) The transfer is considered to be to a foreign corporation solely by reason of § 1.83–6(d)(1) and the fair market value of the property transferred did not exceed $100,000.

(ii) *Transfers before July 20, 1998*. With respect to transfers occurring after December 16, 1987, and prior to July 20, 1998, a U.S. transferor that transferred U.S. or foreign stock or securities in a transfer described in section 367(a) is not subject to section 6038B if such person is described in paragraph (b)(2)(i)(A) of this section.

(3) *Special rule for transfers of cash*. A U.S. person that transfers cash to a foreign corporation in a transfer described in section 6038B(a)(1)(A) must report the transfer if—

(i) Immediately after the transfer such person holds directly, indirectly, or by attribution (determined under the rules of section 318(a), as modified by section 6038(e)(2)) at least 10 percent of the total voting power or the total value of the foreign corporation; or

(ii) The amount of cash transferred by such person or any related person (determined under section 267(b)(1) through (3) and (10) through (12)) to such foreign corporation during the 12-month period ending on the date of the transfer exceeds $100,000.

(4) [Reserved]. For further guidance, see § 1.6038B–1T(b)(4).

(c) *Information required with respect to transfers described in section 6038B(a)(1)(A).* A United States person that transfers property to a foreign corporation in an exchange described in section 6038B(a)(1)(A) (including cash transferred in taxable years beginning after February 5, 1999, and other unappreciated property) must provide the following information, in paragraphs labeled to correspond with the number or letter set forth in this paragraph (c) and § 1.6038B–1T(c)(1) through (5). If a particular item is not applicable to the subject transfer, the taxpayer must list its heading and state that it is not applicable. For special rules applicable to transfers of stock or securities, see paragraph (b)(2)(ii) of this section.

(1) through (5) [Reserved]. For further guidance, see § 1.6038B–1T(c)(1) through (5).

(6) *Application of section 367(a)(5).* If the asset is transferred in an exchange described in section 361(a) or (b), a statement that the conditions set forth in the second sentence of section 367(a)(5) and any regulations under that section have been satisfied, and an explanation of any basis or other adjustments made pursuant to section 367(a)(5) and any regulations thereunder.

(d) [Reserved]. For further guidance, see § 1.6038B–1T(d).

(e) *Transfers subject to section 367(e)*—(1) *In general.* If a domestic corporation (distributing corporation) makes a distribution described in section 367(e)(1) or section 367(e)(2), the distributing corporation must comply with the reporting requirements of this paragraph (e). Unless otherwise provided in this section, a distributing corporation making a distribution described in sections 367(e)(1) or 367(e)(2) must file a Form 926, ''Return by a U.S. Transferor of Property to a Foreign Corporation (under section 367),'' as amended and modified by this section.

(2) *Reporting requirements for section 367(e)(1) distributions of domestic controlled corporations.* A domestic distributing corporation making a distribution of the stock or securities of a domestic corporation under section 355 is not required to file a Form 926, as described in paragraph (e)(1) of this section, and shall have no other reporting requirements under section 6038B.

(3) *Reporting requirements for section 367(e)(1) distributions of foreign controlled corporations.* If the distributing corporation makes a section 355 distribution of the stock or securities of a foreign controlled corporation to distributee shareholders who are not qualified U.S. persons, as defined in § 1.367(e)–1(b)(1), then the distributing corporation shall complete Part 1 of the Form 926 and attach a signed copy of such form to its U.S. income tax return for the year of the distribution. The distributing corporation shall also attach to its U.S. income tax return for the year of distribution a statement signed under the penalties of perjury entitled, ''Addendum to Form 926.'' The addendum shall contain a brief description of the transaction, state the number of shares distributed to distributees who are not qualified U.S. persons (applying the rules contained in § 1.367(e)–1(d)), and state the basis and fair market value of the distributed stock or securities (including a list stating the amounts that were distributed to distributees who were not qualified U.S. persons and distributees who were qualified U.S. persons).

(4) *Reporting rules for section 367(e)(2) distributions by domestic liquidating corporations.* If the distributing corporation makes a distribution of property in complete liquidation under section 332 to a foreign distributee corporation that meets the stock ownership requirements of section 332(b) with respect to the stock of the distributing corporation, then the distributing corporation shall complete a Form 926 and attach a signed copy of such form to its U.S. income tax return for the year of the distribution. The property description contained in Part III of the Form 926 shall contain a description of all property distributed by the liquidating corporation (regardless of whether the property qualifies for nonrecognition). The description shall also identify the property excepted from gain recognition under § 1.367(e)–2(b)(2)(ii) and (iii). If the distributing corporation distributes property that will be used by the foreign distributee corporation in a

U.S. trade or business and the distributing corporation does not recognize gain on such distribution under §1.367(e)–2(b)(2)(i), then the distributing corporation may satisfy the requirements of this section by completing Part 1 of the Form 926, noting thereon that the information required by the Form 926 is contained in the statement required by §1.367(e)–2(b)(2)(i)(C)(*2*), and attaching a signed copy of the Form 926 to its U.S. income tax return for the year of the distribution.

(f) *Failure to comply with reporting requirements*—(1) *Consequences of failure.* If a U.S. person is required to file a notice (or otherwise comply) under paragraph (b) of this section and fails to comply with the applicable requirements of section 6038B and this section, then with respect to the particular property as to which there was a failure to comply—

(i) That property shall not be considered to have been transferred for use in the active conduct of a trade or business outside of the United States for purposes of section 367(a) and the regulations thereunder;

(ii) The U.S. person shall pay a penalty under section 6038B(b)(1) equal to 10 percent of the fair market value of the transferred property at the time of the exchange, but in no event shall the penalty exceed $100,000 unless the failure with respect to such exchange was due to intentional disregard (described under paragraph (g)(4) of this section); and

(iii) The period of limitations on assessment of tax upon the transfer of that property does not expire before the date which is 3 years after the date on which the Secretary is furnished the information required to be reported under this section. See section 6501(c)(8) and any regulations thereunder.

(2) *Failure to comply*. A failure to comply with the requirements of section 6038B is—

(i) The failure to report at the proper time and in the proper manner any material information required to be reported under the rules of this section; or

(ii) The provision of false or inaccurate information in purported compliance with the requirements of this section. Thus, a transferor that timely files Form 926 with the attachments required under the rules of this section shall, nevertheless, have failed to comply if, for example, the transferor reports therein that property will be used in the active conduct of a trade or business outside of the United States, but in fact the property continues to be used in a trade or business within the United States.

(3) *Reasonable cause exception*. The provisions of paragraph (f)(1) of this section shall not apply if the transferor shows that a failure to comply was due to reasonable cause and not willful neglect. The transferor may do so by providing a written statement to the district director having jurisdiction of the taxpayer's return for the year of the transfer, setting forth the reasons for the failure to comply. Whether a failure to comply was due to reasonable cause shall be determined by the district director under all the facts and circumstances.

(4) *Definition of intentional disregard*. If the transferor fails to qualify for the exception under paragraph (f)(3) of this section and if the taxpayer knew of the rule or regulation that was disregarded, the failure will be considered an intentional disregard of section 6038B, and the monetary penalty under paragraph (f)(1)(ii) of this section will not be limited to $100,000. See §1.6662–3(b)(2).

(g) This section applies to transfers occurring on or after July 20, 1998, except for transfers of cash made in tax years beginning on or before February 5, 1999, which are not required to be reported under section 6038B, and except for paragraph (e) of this section, which applies to transfers that are subject to §§1.367(e)–1(f) and 1.367(e)–2(e). See §1.6038B–1T for transfers occurring prior to July 20, 1998. See also §1.6038B–1T(e) in effect prior to August 9, 1999 (as contained in 26 CFR part 1 revised April 1, 1999), for transfers described in section 367(e) that are not subject to §§1.367(e)–1(f) and 1.367(e)–2(e).

[T.D. 8770, 63 FR 33568, June 19, 1998, as amended by T.D. 8817, 64 FR 5715, Feb. 5, 1999; 64 FR 15686, 15687, Apr. 1, 1999; T.D. 8834, 64 FR 43082, Aug. 9, 1999; T.D. 8850, 64 FR 72553, Dec. 28, 1999]

§ 1.6038B–1T Reporting of certain transactions to foreign corporations (temporary).

(a) through (b)(2) [Reserved]. For further guidance, see § 1.6038B–1(a) through (b)(2).

(b)(3) [Reserved].

(4) *Date of transfer*—(i) *In general*. For purposes of this section, the date of a transfer described in section 367 is the first date on which title to, possession of, or rights to the use of stock, securities, or other property passes pursuant to the plan for purposes of subtitle A of the Internal Revenue Code. A transfer will not be considered to begin with a decision of a board of directors or similar action unless the transaction otherwise takes effect for purposes of subtitle A of the Internal Revenue Code on that date.

(ii) *Termination of section 1504(d) election*. A transfer deemed to occur as a result of the termination of an election under section 1504(d) will be considered to occur on the date the contiguous country corporation first fails to continue to qualify for the election under section 1504(d). The rule of this paragraph (b)(3)(ii) is illustrated by the following example.

Example. Domestic corporation W previously made a valid election under section 1504(d) to have its Mexican subsidiary S treated as a domestic corporation. On August 1, 1986, W disposes of its right, title, and interest in 10 percent of the stock of S by selling such stock to an unrelated United States person who is not a director of S. S first fails to continue to qualify for the election under section 1504(d) on August 1, 1986, since on such date it ceases to be directly or indirectly wholly owned or controlled by W. The constructive transfer of assets from ''domestic'' corporation S to Mexican corporation S is considered to occur on that date.

(iii) *Change in classification*. A transfer deemed to occur as a result of a change in classification of an entity caused by a change in the governing documents, articles, or agreements of the entity (as described in § 1.367(a)–1T(c)(6)) will be considered to occur on the date that such changes take effect for purposes of subtitle A of the Internal Revenue Code.

(iv) *U.S. resident under section 6013 (g) or (h)*. A transfer made by an alien individual who is considered to be a U.S. resident by reason of a timely election under section 6013 (g) or (h) will be considered to occur, for purposes of this section (but not for purposes of section 367), on the later of—

(A) The date on which the election under section 6013 (g) or (h) is made; or

(B) The date on which the transfer would otherwise be considered to occur under the rules of this paragraph (b)(3).

The rule of this paragraph (b)(3)(iv) is illustrated by the following example.

Example. D is a nonresident alien individual who is married to a United States citizen. On March 1, 1986, D transfers property to a foreign corporation in an exchange described in section 351. On April 15, 1987, D and the spouse timely file with their tax return for the taxable year ended December 31, 1986, an election under section 6013(g) for D to be treated as a United States resident. The election is effective on January 1, 1986. For purposes of section 6038 B, the transfer described in section 367(a) made by D in connection with the section 351 exchange is considered to occur on April 15, 1987, the date on which the timely election was made under section 6013(g).

(c) Introductory text [Reserved]. For further guidance, see § 1.6038B–1(c).

(1) *Transferor*. Provide the name, U.S. taxpayer identification number, and address of the U.S. person making the transfer.

(2) *Transfer*. Provide the following information concerning the transfer:

(i) Name, U.S. taxpayer identification number (if any), address, and country of incorporation of transferee foreign corporation;

(ii) A general description of the transfer, and any wider transaction of which it forms a part, including a chronology of the transfers involved and an identification of the other parties to the transaction to the extent known.

(3) *Consideration received*. Provide a description of the consideration received by the U.S. person making the transfer, including its estimated fair market value and, in the case of stock or securities, the class or type, amount, and characteristics of the interest received.

(4) *Property transferred*. Provide a description of the property transferred. The description must be divided into the following categories, and must include the estimated fair market value and adjusted basis of the property, as well as any additional information specified below.

(i) *Active business property*. Describe any transferred property (other than stock or securities) to be used in the active conduct of a trade or business outisde of the United States. Provide here a general description of the business conducted (or to be conducted) by the transferee, including the location of the business, the number of its employees, the nature of the business, and copies of the most recently prepared balance sheet and profit and loss statement. Property listed within this category may be identified by general type. For example, upon the transfer of the assets of a manufacturing operation, a reasonable description of the property to be used in the business might include the categories of office equipment and supplies, computers and related equipment, motor vehicles, and several major categories of manufacturing equipment. However, any property that is includible both in this subdivision (i) and in subdivision (iii) of this paragraph (c)(4) (property subject to depreciation recapture under §1.367(a)–4T (b)) must be identified in the manner required in subdivision (iii). If property is considered to be transferred for use in the active conduct of a trade or business under a special rule in §1.367(a)–4T, specify the applicable rule and provide information supporting the application of the rule. If property is subject to section 367(a)(1) regardless of its use in a trade or business under the rules of §1.367(a)–4T or §1.367(a)–5T, list the property only in response to subdivision (vii) of this paragraph (c)(4).

(ii) *Stock or securities*. Describe any transferred stock or securities, including the class or type, amount, and characteristics of the transferred stock or securities, as well as the name, address, place of incorporation, and general description of the corporation issuing the stock. In addition, provide the following information if applicable:

(A) *Active trade or business stock*. If the stock or securities are considered to be transferred for use in the active conduct of a trade or business outside of the United States under the rules of §1.367(a)–3T(d)(2), provide information supporting the application of the rule.

(B) *Application of special rules*. If any provision of §1.367(a)–3T applies to except the transfer of stock or securities from the rule of section 367(a)(1), provide information supporting the claimed application of such provision (including information supporting the nonapplicability of either anti-abuse rule under §1.367(a)–3T(h)). If the transferor is entering into an agreement to recognize gain upon a later disposition of the transferred stock by the transferee foreign corporation under §1.367(a)–3T(g), attach the agreement and waiver as required by the rules of that paragraph.

(iii) *Depreciated property*. Describe any property that is subject to depreciation recapture under the rules of §1.367(a)–4T(b). Property within this category must be separately identified to the same extent as was required for purposes of the previously claimed depreciation deduction. Specify with respect to each such asset the relevant recapture provision, the number of months in which such property was in use within the United States, the total number of months the property was in use, the fair market value of the property, a schedule of the depreciation deduction taken with respect to the property, and a calculation of the amount of depreciation required to be recaptured.

(iv) *Property to be leased*. Describe any property to be leased to other persons by the transferee foreign corporation (unless such property is considered to be transferred for use in the active conduct of a trade or business and was thus listed under subdivision (i) of this paragraph (c)(4)). If the rules of §1.367(a)–4T(c)(2) apply to except the transfer from the rule of section 367(a)(1), provide information supporting the claimed application of such provision.

(v) *Property to be sold*. Describe any transferred property that is to be sold or otherwise disposed of by the transferee foreign corporation, as described in §1.367(a)–4T(d).

(vi) *Transfers to FSCs*. Describe any property that is subject to the special rule of §1.367(a)–4T(g) for transfers to FSCs. Provide information supporting the claimed application of that rule.

(vii) *Tainted property*. Describe any property that is subject to §1.367(a)–5T (concerning property that is subject to

the rule of section 367(a)(1) regardless of whether it is transferred for use in the active conduct of a trade or business outside of the United States). Such description must be divided into the relevant categories, as follows:

(A) *Inventory, etc.* Property described in §1.367(a)–5T(b);

(B) *Installment obligations, etc.* Property described in §1.367(a)–5T(c);

(C) *Foreign currency, etc.* Property described in §1.367(a)–5T(d);

(D) *Intangible property.* Property described in §1.367(a)–5T(e); and

(E) *Leased property.* Property described in §1.367(a)–4T(f).

If any exception provided in §1.367(a)–5T applies to the transferred property (making section 367(a)(1) not applicable to the transfer), provide information supporting the claimed application of such exception.

(viii) *Foreign loss branch.* Provide the information specified in paragraph (c)(5) of this section.

(ix) *Other intangibles.* Describe an intangible property sold or licensed by the transferor to the transferee foreign corporation, and set forth the general terms of each sale or license.

(5) *Transfer of foreign branch with previously deducted losses.* If the property transferred is property of a foreign branch with previously deducted losses subject to the rules of §1.367(a)–6T, provide the following information:

(i) *Branch operation.* Describe the foreign branch the property of which is transferred, in accordance with the definition of §1.367(a)–6T(g).

(ii) *Branch property.* Describe the property of the foreign branch, including its adjusted basis and fair market value. For this purpose property must be identified with reasonable particularity, but may be identified by category rather than listing every asset separately. Substantially similar property may be listed together for this purpose, and property of minor value may be grouped into functional categories. For example, a reasonable description of the property of a business office might include the following categories: Word processing or data processing equipment, other office equipment and furniture, and office supplies.

(iii) *Previously deducted losses.* Set forth a detailed calculation of the sum of the losses incurred by the foreign branch before the transfer, and a detailed calculation of any reduction of such losses, in accordance with §1.367(a)–6T (d) and (e).

(iv) *Character of gain.* Set forth a statement of the character of the gain required to be recognized, in accordance with §1.367(a)–6T(c)(1).

(6) [Reserved]. For further guidance, see §1.6038B–1(c)(6).

(d) *Transfers subject to section 367(d)*—(1) *Initial transfer.* A U.S. person that transfers inntangible property to a foreign corporation in an exchange described in section 351 or 361 must provide the following information in paragraphs labelled to correspond with the number or letter set forth below. If a particular item is not applicable to the subject transfer, list its heading and state that it is not applicable. The information required by subdivisions (i) through (iii) need only be provided if such information was not otherwise provided under paragraph (c) of this section. (Note that the U.S. transferor may subsequently be required to file another return under paragraph (d)(2) of this section.)

(i) *Transferor.* Provide the name, U.S. taxpayer identification number, and address of the U.S. person making the transfer.

(ii) *Transfer.* Provide information concerning the transfer, including:

(A) Name, U.S. taxpayer identification number (if any), address, and country of incorporation of the transferee foreign corporation; (B) A general description of the transfer, and any wider transaction of which it forms a part, including a chronology of the transfers involved and an identification of the other parties to the transaction to the extent known.

(iii) *Consideration received.* Provide a description of the consideration received by the U.S. person making the transfer, including its estimated fair market value and, in the case of stock or securities, the class or type, amount, and characteristics of the interest received.

(iv) *Intangible property transferred.* Provide a description of the intangible property transferred, including its adjusted basis. Generally, each intangible

asset must be separately identified. Operating intangibles and foreign goodwill or going concern value, as defined in § 1.367(a)–1T(d)(5) (ii) and (iii), should be so identified and classified.

(v) *Annual payment*. Provide and explain the calculation of the annual deemed payment for the use of the intangible property required to be recognized by the transferor under the rules of section 367(d).

(vi) *Election to treat as sale*. List any intangible with respect to which an election is being made under § 1.367(d)–1T(g)(2) to treat the transfer as a sale. Include the fair market value of the intangible on the date of the transfer and a calculation of the gain required to be recognized in the year of the transfer by reason of the election.

(vii) *Coordination with loss rules*. List any intangible property subject to section 367(d) the transfer of which also gives rise to the recognition of gain under section 904(f)(3) or § 1.367(a)–6T. Provide a calculation of the gain required to be recognized with respect to such property, in accordance with the provisions of § 1.367(d)–1T(g)(4).

(viii) *Other intangibles*. Describe any intangible property sold or licensed by the transferor to the transferee foreign corporation, and set forth the general terms of each sale or license.

(2) *Subsequent transfers*. If a U.S. person transfers intangible property to a foreign corporation in an exchange described in section 351 or 361, and at any time thereafter (within the useful life of the intangible property) either that U.S. person disposes of the stock of the transferee foreign corporation or the transferee foreign corporation disposes of the transferred intangible, then the U.S. person must provide the following information in paragraphs labelled to correspond with the number or letter set forth below. The information required by subdivisions (i) and (ii) need only be provided if such information was not otherwise provided in the same return, pursuant to paragraph (c) or (d)(1) of this section. For purposes of determining the date on which a return under this subparagraph (2) is required to be filed, the date of transfer is the date of the subsequent transfer of stock or intangible property.

(i) *Transferor*. Provide the name, U.S. taxpayer identification number, and address of the U.S. person making the transfer.

(ii) *Initial transfer*. Provide the following information concerning the initial transfer:

(A) The date of the transfer;

(B) The name, U.S. taxpayer identification number (if any), address, and country of incorporation of the transferee foreign corporation; and

(C) A general description of the transfer and any wider transaction of which it formed a part.

(iii) *Subsequent transfer*. Provide the following information concerning the subsequent transfer:

(A) A general description of the subsequent transfer and any wider transaction of which it forms a part;

(B) A calculation of any gain required to be recognized by the U.S. person under the rules of § 1.367(d)–1T (d) through (f); and

(C) The name, address, and identifying number of each person that under the rules of § 1.367(d)–1T (e) or (f) will be considered to receive contingent annual payments for the use of the intangible property.

(e) [Reserved] For further guidance, see § 1.6038B–1(e).

(f) [Reserved]. For further guidance, see § 1.6038B–1(f).

(g) *Effective date*. This section applies to transfers occurring after December 31, 1984. See § 1.6038B–1T(a) through (b)(2), (c) introductory text, and (f) (26 CFR part 1, revised April 1, 1998) for transfers occurring prior to July 20, 1998. See § 1.6038B–1 for transfers occurring on or after July 20, 1998.

[T.D. 8087, 51 FR 17957, May 16, 1986, as amended by T.D. 8682, 61 FR 42177, Aug. 14, 1996; T.D. 8770, 63 FR 33570, June 19, 1998; T.D. 8834, 64 FR 43083, Aug. 9, 1999]

§ 1.6038B–2 Reporting of certain transfers to foreign partnerships.

(a) *Reporting requirements*—(1) *Requirement to report transfers*. A United States person that transfers property to a foreign partnership in a contribution described in section 721 (including section 721(b)) must report that transfer on Form 8865 ''Information Return of U.S. Persons With Respect to Certain Foreign Partnerships'' pursuant to

section 6038B and the rules of this section, if—

(i) Immediately after the transfer, the United States person owns, directly, indirectly, or by attribution, at least a 10-percent interest in the partnership, as defined in section 6038(e)(3)(C) and the regulations thereunder; or

(ii) The value of the property transferred, when added to the value of any other property transferred in a section 721 contribution by such person (or any related person) to such partnership during the 12-month period ending on the date of the transfer, exceeds $100,000.

(2) *Indirect transfer through a domestic partnership*—For purposes of this section, if a domestic partnership transfers property to a foreign partnership in a section 721 transaction, the domestic partnership's partners shall be considered to have transferred a proportionate share of the property to the foreign partnership. However, if the domestic partnership properly reports all of the information required under this section with respect to the contribution, no partner of the transferor partnership, whether direct or indirect (through tiers of partnerships), is also required to report under this section. For illustrations of this rule, see *Examples 4* and *5* of paragraph (a)(7) of this section.

(3) *Indirect transfer through a foreign partnership*. [Reserved]

(4) *Requirement to report dispositions*—(i) *In general*. If a United States person was required to report a transfer to a foreign partnership of appreciated property under paragraph (a)(1) or (2) of this section, and the foreign partnership disposes of the property while such United States person remains a direct or indirect partner, that United States person must report the disposition by filing Form 8865. The form must be attached to, and filed by the due date (including extensions) of, the United States person's income tax return for the year in which the disposition occurred.

(ii) *Disposition of contributed property in nonrecognition transaction*. If a foreign partnership disposes of contributed appreciated property in a nonrecognition transaction and substituted basis property is received in exchange, and the substituted basis property has built-in gain under § 1.704-3(a)(8), the original transferor is not required to report the disposition. However, the transferor must report the disposition of the substituted basis property in the same manner as provided for the contributed property.

(5) *Time for filing Form 8865*. The Form 8865 on which a transfer is reported must be attached to the transferor's timely filed (including extensions) income tax return for the tax year that includes the date of the transfer. If the person required to report under this section is not required to file an income tax return for its tax year during which the transfer occurred, but is required to file an information return for that year (for example, Form 1065, ''U.S. Partnership Return of Income,'' or Form 990, ''Return of Organization Exempt from Income Tax''), the person should attach the Form 8865 to its information return.

(6) *Returns to be made*—(i) *Separate returns for each partnership*. If a United States person transfers property reportable under this section to more than one foreign partnership in a taxable year, the United States person must submit a separate Form 8865 for each partnership.

(ii) *Duplicate form to be filed*. If required by the instructions accompanying Form 8865, a duplicate Form 8865 (including attachments and schedules) must also be filed by the due date for submitting the original Form 8865 under paragraph (a)(5)(i) or (ii) of this section, as applicable.

(7) *Examples*. The application of this paragraph (a) may be illustrated by the following examples:

Example 1. On November 1, 2001, *US*, a United States person that uses the calendar year as its taxable year, contributes $200,000 to *FP*, a foreign partnership, in a transaction subject to section 721. After the contribution, *US* owns a 5% interest in *FP*. *US* must report the contribution by filing Form 8865 for its taxable year ending December 31, 2001. On March 1, 2002, *US* makes a $40,000 section 721 contribution to *FP*, after which *US* owns a 6% interest in *FP*. *US* must report the $40,000 contribution by filing Form 8865 for its taxable year ending December 31, 2002, because the contribution, when added to the value of the other property contributed by

US to *FP* during the 12-month period ending on the date of the transfer, exceeds $100,000.

Example 2. F, a nonresident alien, is the brother of *US*, a United States person. *F* owns a 15% interest in *FP*, a foreign partnership. *US* contributes $99,000 to *FP*, in exchange for a 1-percent partnership interest. Under sections 6038(e)(3)(C) and 267(c)(2), *US* is considered to own at least a 10-percent interest in *FP* and, therefore, *US* must report the $99,000 contribution under this section.

Example 3. US, a United States person, owns 40 percent of *FC*, a foreign corporation. *FC* owns a 20-percent interest in *FP*, a foreign partnership. Under section 267(c)(1), *US* is considered to own 8 percent of *FP* due to its ownership of *FC*. *US* contributes $50,000 to *FP* in exchange for a 5-percent partnership interest. Immediately after the contribution, *US* is considered to own at least a 10-percent interest in *FP* and, therefore, must report the $50,000 contribution under this section.

Example 4. US, a United States person, owns a 60-percent interest in *USP*, a domestic partnership. On March 1, 2001, *USP* contributes $200,000 to *FP*, a foreign partnership, in exchange for a 5-percent partnership interest. Under paragraph (a)(2) of this section, *US* is considered as having contributed $120,000 to *FP* ($200,000 × 60%). However, under paragraph (a)(2), if *USP* properly reports the contribution to *FP*, *US* is not required to report its $120,000 contribution. If *US* directly contributes $5,000 to *FP* on June 10, 2001, *US* must report the $5,000 contribution because *US* is considered to have contributed more than $100,000 to *FP* in the 12-month period ending on the date of the $5,000 contribution.

Example 5. US, a United States person, owns an 80-percent interest in *USP*, a domestic partnership. *USP* owns an 80-percent interest in *USP1*, a domestic partnership. On March 1, 2001, *USP1* contributes $200,000 to *FP*, a foreign partnership, in exchange for a 3-percent partnership interest. Under paragraph (a)(2) of this section, *USP* is considered to have contributed $160,000 ($200,000 × 80%) to *FP*. *US* is considered to have contributed $128,000 to *FP* ($200,000 × 80% × 80%). However, if *USP1* reports the transfer of the $200,000 to *FP*, neither *US* nor *USP* are required to report under this section the amounts they are considered to have contributed. Additionally, regardless of whether *USP1* reports the $200,000 contribution, if *USP* reports the $160,000 contribution it is considered to have made, *US* does not have to report under this section the $128,000 contribution *US* is considered to have made.

(b) *Transfers by trusts relating to state and local government employee retirement plans.* Trusts relating to state and local government employee retirement plans are not required to report transfers under this section, unless otherwise specified in the instructions to Form 8865.

(c) *Information required with respect to transfers of property.* With respect to transfers required to be reported under paragraph (a)(1) or (2) of this section, the return must contain information in such form or manner as Form 8865 (and its accompanying instructions) prescribes with respect to reportable events, including—

(1) The name, address, and U.S. taxpayer identification number of the United States person making the transfer;

(2) The name, U.S. taxpayer identification number (if any), and address of the transferee foreign partnership, and the type of entity and country under whose laws the partnership was created or organized;

(3) A general description of the transfer, and of any wider transaction of which it forms a part, including the date of transfer;

(4) The names and addresses of the other partners in the foreign partnership, unless the transfer is solely of cash and the transferor holds less than a ten-percent interest in the transferee foreign partnership immediately after the transfer. However, for tax years of U.S. persons beginning on or after January 1, 2000, the person reporting pursuant to section 6038B (the transferor) must provide the names and addresses of each United States person that owned a ten-percent or greater direct interest in the foreign partnership during the transferor's tax year in which the transfer occurred, and the names and addresses of any other United States or foreign persons that were direct partners in the foreign partnership during that tax year and that were related to the transferor during that tax year. See paragraph (i)(4) of this section for the definition of a related person;

(5) A description of the partnership interest received by the United States person, including a change in partnership interest;

(6) A separate description of each item of contributed property that is appreciated property subject to the allocation rules of section 704(c)(except

to the extent that the property is permitted to be aggregated in making allocations under section 704(c)), or is intangible property, including its estimated fair market value and adjusted basis; and

(7) A description of other contributed property, not specified in paragraph (c)(6) of this section, aggregated by the following categories (with, in each case, a brief description of the property)—

(i) Stock in trade of the transferor (inventory);

(ii) Tangible property (other than stock in trade) used in a trade or business of the transferor;

(iii) Cash;

(iv) Stock, notes receivable and payable, and other securities; and

(v) Other property.

(d) *Information required with respect to dispositions of property*. In respect of dispositions required to be reported under paragraph (a)(4) of this section, the return must contain information in such form or manner as Form 8865 (and its accompanying instructions) prescribes with respect to reportable events, including—

(1) The date and manner of disposition;

(2) The gain and depreciation recapture amounts, if any, realized by the partnership; and

(3) Any such amounts allocated to the United States person.

(e) *Method of reporting*. Except as otherwise provided on Form 8865, or the accompanying instructions, all amounts reported as required under this section must be expressed in United States currency, with a statement of the exchange rates used. All statements required on or with Form 8865 pursuant to this section must be in the English language.

(f) *Reporting under this section not required of partnerships excluded from the application of subchapter K*—(1) *Election to be wholly excluded*. The reporting requirements of this section will not apply to any United States person in respect of an eligible partnership as described in §1.761–2(a), if such partnership has validly elected to be excluded from all of the provisions of subchapter K of chapter 1 of the Internal Revenue Code in the manner specified in §1.761–2(b)(2)(i).

(2) *Deemed excluded*. The reporting requirements of this section will not apply to any United States person in respect of an eligible partnership as described in §1.761–2(a), if such partnership is validly deemed to have elected to be excluded from all of the provisions of subchapter K of chapter 1 of the Internal Revenue Code in accordance with the provisions of §1.761–2(b)(2)(ii).

(g) *Deemed contributions*. Deemed contributions resulting from IRS-initiated section 482 adjustments are not required to be reported under section 6038B. However, taxpayers must report deemed contributions resulting from taxpayer-initiated adjustments. Such information will be furnished timely if filed by the due date, including extensions, for filing the taxpayer's income tax return for the year in which the adjustment is made.

(h) *Failure to comply with reporting requirements*—(1) *Consequences of failure*. If a United States person is required to file a return under paragraph (a) of this section and fails to comply with the reporting requirements of section 6038B and this section, then such person is subject to the following penalties:

(i) The United States person is subject to a penalty equal to 10 percent of the fair market value of the property at the time of the contribution. Such penalty with respect to a particular transfer is limited to $100,000, unless the failure to comply with respect to such transfer was due to intentional disregard.

(ii) The United States person must recognize gain (reduced by the amount of any gain recognized, with respect to that property, by the transferor after the transfer) as if the contributed property had been sold for fair market value at the time of the contribution. Adjustments to the basis of the partnership's assets and any relevant partner's interest as a result of gain being recognized under this provision will be made as though the gain was recognized in the year in which the failure to report was finally determined.

(2) *Failure to comply*. A failure to comply with the requirements of section 6038B includes—

(i) The failure to report at the proper time and in the proper manner any information required to be reported under the rules of this section; and

(ii) The provision of false or inaccurate information in purported compliance with the requirements of this section.

(3) *Reasonable cause exception*. Under section 6038B(c)(2) and this section, the provisions of paragraph (h)(1) of this section will not apply if the transferor shows that a failure to comply was due to reasonable cause and not willful neglect. The transferor may attempt to do so by providing a written statement to the district director having jurisdiction of the taxpayer's return for the year of the transfer, setting forth the reasons for the failure to comply. Whether a failure to comply was due to reasonable cause will be determined by the district director under all the facts and circumstances.

(4) *Statute of limitations*. For exceptions to the limitations on assessment in the event of a failure to provide information under section 6038B, see section 6501(c)(8).

(i) *Definitions*—(1) *Appreciated property*. Appreciated property is property that has a fair market value in excess of basis.

(2) *Domestic partnership*. A domestic partnership is a partnership described in section 7701(a)(4).

(3) *Foreign partnership*. A foreign partnership is a partnership described in section 7701(a)(5).

(4) *Related person*. Persons are related persons if they bear a relationship described in section 267(b)(1) through (3) or (10) through (12), after application of section 267(c) (except for (c)(3)), or in section 707(b)(1)(B).

(5) *Substituted basis property*. Substituted basis property is property described in section 7701(a)(42).

(6) *Taxpayer-initiated adjustment*. A taxpayer-initiated adjustment is a section 482 adjustment that is made by the taxpayer pursuant to §1.482–1(a)(3).

(7) *United States person*. A United States person is a person described in section 7701(a)(30).

(j) *Effective dates*— (1) *In general*. Except as otherwise provided in this section, this section applies to transfers made on or after January 1, 1998. However, for a transfer made on or after January 1, 1998, but before January 1, 1999, the filing requirements of this section may be satisfied by—

(i) Filing a Form 8865 with the taxpayer's income tax return (including a partnership return of income) for the first taxable year beginning on or after January 1, 1999; or

(ii) Filing a Form 926 (modified to reflect that the transferee is a partnership, not a corporation) with the taxpayer's income tax return (including a partnership return of income) for the taxable year in which the transfer occurred.

(2) *Transfers made between August 5, 1997 and January 1, 1998*. A United States person that made a transfer of property between August 5, 1997, and January 1, 1998, that is required to be reported under section 6038B may satisfy its reporting requirement by reporting in accordance with the provisions of this section or in accordance with the provisions of Notice 98–17 (1998–11 IRB 6)(see §601.601(d)(2) of this chapter).

(3) *Special rule for transfers made before January 1, 2000*. Even if not reported in accordance with the rules provided in paragraph (a)(5) of this section, or paragraph (j) (1) or (2) of this section, a transfer that occurred before January 1, 2000 will nevertheless be considered timely reported if the transferor reports it on a Form 8865 attached to an amended tax return for the transferor's tax year in which the transfer occurred, provided such amended return is filed no later than September 15, 2000.

[T.D. 8817, 64 FR 5715, Feb. 5, 1999; 64 FR 15686, Apr. 1, 1999; T.D. 8850, 64 FR 72554, Dec. 28, 1999]

§1.6039–1 Information returns required of corporations with respect to certain stock option transactions occurring on or after January 1, 1964.

(a) *Requirement of return under section 6039(a)(1)*. Every corporation which transfers stock to any person pursuant to such person's exercise on or after

January 1, 1964, of a qualified stock option described in section 422(b), or a restricted stock option described in section 424(b), shall make, for each calendar year in which such a transfer occurs, an information return on Form 3921 with respect to each transfer made during such year. The return shall include the following information:

(1) The name, address and employer identification number of the corporation transferring the stock;

(2) The name, address, and identifying number of the person to whom the share or shares of stock were transferred;

(3) The name and address of the corporation the stock of which is the subject of the option (if other than the corporation transferring the stock);

(4) The date the option was granted;

(5) The date the shares were transferred to the person exercising the option;

(6) The fair market value of the stock at the time the option was exercised;

(7) The number of shares of stock transferred pursuant to the option;

(8) The type of option under which the transferred shares were acquired; and

(9) Such other information as may be required by the return or by the instructions issued with respect thereto.

(b) *Requirement of return under section 6039(a)(2).* (1) Every corporation which records, or has by its agent recorded, a transfer of the title to stock acquired by the transferor pursuant to his exercise on or after January 1, 1964, of:

(i) An option granted under an employee stock purchase plan which meets the requirements of section 423(b), and with respect to which the special rule of section 423(c) applied, or

(ii) A restricted stock option which meets the requirements of section 424(b), and with respect to which the special rule of section 424(c)(1) applies,

shall make, for each calendar year in which such a recorded transfer of title to such stock occurs, an information return on Form 3922 with respect to each transfer containing the information required by subparagraph (2) of this paragraph.

(2) The return required by subparagraph (1) of this paragraph shall contain the following information:

(i) The name and address of the corporation whose stock is being transferred;

(ii) The name, address, and identifying number of the transferor;

(iii) The date such stock was transferred to the transferor;

(iv) The number of shares to which title is being transferred; and

(v) The type of option under which the transferred shares were acquired.

(3) If the return required by this paragraph is made by the authorized ''transfer agent'' of the corporation, it shall be deemed to have been made by the corporation. The term ''transfer agent'', as used in this paragraph, means any designee authorized to keep the stock ownership records of a corporation and to record a transfer of title of the stock of such corporation on behalf of such corporation.

(4) Where a corporation is required by this paragraph to make an information return for the calendar year, such return will only have to supply information relating to the first recorded transfer of title to the share or shares of stock. Thus, for example, if the owner has record title to a share or shares of stock transferred to a recognized broker or financial institution and the stock is subsequently sold by such broker or institution (on behalf of the owner) the corporation is only required to report information relating to the transfer of record title to the broker or financial institution. Similarly, a return is required when a share of stock is transferred by the optionee to himself and another person (or persons) as joint tenants, tenants by the entireties or tenants in common. However, when stock is originally issued to the optionee and another person (or persons) as joint tenants, or as tenants by the entirety, and a stock certificate was not previously actually issued to the optionee as a sole owner, the return required by this paragraph shall be made (at such time and in such manner as is provided by this section with respect to a transfer by the optionee) in respect of the first transfer of the title to such stock by the optionee.

(5) Every corporation which transfers any share of stock pursuant to the exercise of an option described in this

paragraph shall identify such stock in a manner sufficient to enable the accurate reporting of the transfer of record title to such shares. Such identification may be accomplished by assigning to the certificates of stock issued pursuant to the exercise of such options a special serial number, or color.

(c) *Time, place, and manner of filing.* (1) The returns on Forms 3921 and 3922 required by section 6039(a) (1) and (2) and paragraphs (a) and (b) of this section shall be filed as attachments to a summary report on Form 4067 which must be signed by the person required to file the returns or its duly authorized agent. With respect to returns on Form 3921, the summary report on Form 4067 shall indicate the number of returns filed, the number of shares transferred pursuant to exercise of options, the dates on which the options exercised were offered or granted, the fair market value of shares subject to option on such dates, the method by which such value was determined, the type of options under which the transferred shares were acquired, and such other information as may be required by the form or by the instructions issued with respect thereto. With respect to returns on Form 3922, the summary report on Form 4067 shall indicate the number of returns filed, the number of shares transferred, the type of options under which the transferred shares were acquired and such other information as may be required by the form or by the instructions issued with respect thereto. The summary report on Form 4067 and the attached returns on Forms 3921 and 3922 required for any calendar year shall be filed on or before February 28 of the following year with any of the Internal Revenue Service Centers.

(2) If a return is made by the authorized ''transfer agent'' of the corporation, as described in paragraph (b)(3) of this section, it shall be filed with the district director for the district where the income tax return of the principal corporation is filed after the close of the calendar year for which the return is required, but on or before February 28th of the following calendar year.

(3) For provisions relating to the extension of time for filing the returns required by this section, see § 1.6081–1.

(4) For provisions relating to the time for performance of an act when the last day prescribed for performance falls on Saturday, Sunday, or a legal holiday, see § 301.7503–1 of this chapter (Regulations on Procedure and Administration).

(d) *Stock to which this section applies.* The rules of this section shall apply to any full share of stock acquired pursuant to the exercise of any qualified or restricted stock option, or any option granted under an employee stock purchase plan, irrespective of whether the transfer of stock pursuant to such excercise qualified for the special tax treatment of section 421 and the regulations thereunder. In addition, the rules of paragraph (b) of this section shall apply to any full shares of stock received in respect of stock which was originally acquired pursuant to the exercise of an option described in the preceding sentence. See section 425(b). For definitions of the terms ''exercise'' and ''transfer'' see paragraphs (f) and (g) of § 1.421–7. A return is required under paragraph (b) of this section irrespective of whether the transfer of the title constitutes a disposition of such stock as defined by section 425(c).

[T.D. 6887, 31 FR 8813, June 24, 1966]

§ 1.6039–2 Statements to persons with respect to whom information is furnished.

(a) *Requirement and form of statement.* Every corporation required to make a return on Form 3921 or 3922 under section 6039(a) and § 1.6039–1 shall furnish to each person whose identifying number is (or should be) shown on such return a written statement containing the information required to be shown on such return. This requirement may be met by furnishing a copy of the appropriate return to such person. A statement shall be considered to be furnished to a person within the meaning of this section if it is mailed to such person at his last known address.

(b) *Time for furnishing statements*—(1) *In general.* Each statement required by this section to be furnished to any person for a calendar year shall be furnished to such person on or before January 31, of the year following the year for which the statement is required.

(2) *Extension of time*. For good cause shown upon written application of the corporation required to furnish statements under this section, the district director may grant an extension of time not exceeding 30 days in which to furnish such statements. The application shall be addressed to the district director with whom the income tax returns of the applicant-corporation are filed and shall contain a full recital of the reasons for requesting the extension to aid the district director in determining the period of the extension, if any, which will be granted. Such a request in the form of a letter to the district director signed by the applicant (or its agent) will suffice as an application. The application shall be filed on or before the date prescribed in subparagraph (1) of this paragraph for furnishing the statements required by this section.

(3) *Last day for furnishing statement*. For provisions relating to the time for performance of an act when the last day prescribed for performance falls on Saturday, Sunday, or a legal holiday, see § 301.7503–1 of this chapter (Regulations on Procedure and Administration).

(c) *Penalty*. For provisions relating to the penalty provided for failure to furnish a statement under this section, see § 301.6678–1 of this chapter (Regulations on Procedure and Administration).

[T.D. 6887, 31 FR 8814, June 24, 1966]

§ 1.6041–1 Return of information as to payments of $600 or more.

(a) *General rule*. (1) *Information returns required*—(i) *Payments required to be reported*. Except as otherwise provided in §§ 1.6041–3 and 1.6041–4, every person engaged in a trade or business shall make an information return for each calendar year with respect to payments it makes during the calendar year in the course of its trade or business to another person of fixed or determinable income described in paragraph (a)(1)(i) (A) or (B) of this section. For purposes of the regulations under this section, the person described in this paragraph (a)(1)(i) is a payor.

(A) Salaries, wages, commissions, fees, and other forms of compensation for services rendered aggregating $600 or more.

(B) Interest (including original issue discount), rents, royalties, annuities, pensions, and other gains, profits, and income aggregating $600 or more.

(ii) *Information returns required under other provisions of the Internal Revenue Code*. The payments described in paragraphs (a)(1)(i) (A) and (B) of this section shall not include any payments of amounts with respect to which an information return is required by, or may be required under authority of, section 6042(a) (relating to dividends), section 6043(a)(2) (relating to distributions in liquidation), section 6044(a) (relating to patronage dividends), section 6045 (relating to brokers' transactions with customers), sections 6049(a) (1) and (2) (relating to interest), section 6050N(a) (relating to royalties), or section 6050P (a) or (b) (relating to cancellation of indebtedness). In addition, the payments described in paragraphs (a)(1)(i) (A) and (B) of this section shall not include amounts excepted from the definition of dividends under section 6042(b)(2) and § 1.6042–3(b)(1), amounts described in section 6044(b), amounts excepted from reporting under § 1.6045–1(g), amounts excepted from the definition of interest under section 6049(b)(2) (C) or (D), § 1.6049–4(c), or 1.6049–5(b)(6) through (15). Notwithstanding the preceding sentence, interest with respect to a notional principal contract excluded from the definition of interest under § 1.6049–5(b)(15) is reportable under this section. The term *interest* as used in this paragraph (a)(1)(ii) otherwise includes all interest, other than interest coming within the definition of interest provided in § 1.6049–5(a). For example, a closely held corporation borrows money from one of its officers on a promissory note not in registered form bearing annual stated interest of $300. The corporation also pays royalties to the officer amounting to $400 a year. An information return is required under this paragraph (a)(1) to report the payments to the officer because the interest does not come within the definition of interest in § 1.6049–5(a) and the aggregate of interest and royalties exceeds $600.

(2) *Prescribed form.* The return required by subparagraph (1) of this paragraph shall be made on Forms 1096 and 1099 except that (i) the return with respect to distributions to beneficiaries of a trust or of an estate shall be made on Form 1041, and (ii) the return with respect to certain payments of compensation to an employee by his employer shall be made on Forms W–3 and W–2 under the provisions of § 1.6041–2 (relating to return of information as to payments to employees). Where Form 1099 is required to be filed under this section, a separate Form 1099 shall be furnished for each person to whom payments described in subdivision (i), (ii), or (iii) of subparagraph (1) of this paragraph are made. For time and place for filing Forms 1096 and 1099, see § 1.6041–6. For the requirement to submit the information required by Form 1099 on magnetic media for payments after December 31, 1983, see section 6011(e) and § 301.6011–2 of this chapter (Procedure and Administration Regulations).

(b) *Persons engaged in trade or business*—(1) *In general.* The term ''all persons engaged in a trade or business'', as used in section 6041(a), includes not only those so engaged for gain or profit, but also organizations the activities of which are not for the purpose of gain or profit. Thus, the term includes the organizations referred to in section 401(a), 501(c), 501(d) and 521 and in paragraph (g) of this section. On the other hand, section 6041(a) applies only to payments in the course of trade or business; hence it does not apply to an amount paid by the proprietor of a business to a physician for medical services rendered by the physician to the proprietor's child.

(2) *Special rule for REMICs.* For purposes of chapter 1 subtitle F, chapter 61A, part IIIB, the terms ''all persons engaged in a trade or business'' and ''any service-recipient engaged in a trade or business'' includes a real estate mortgage investment conduit or REMIC (as defined in section 860D).

(c) *Fixed or determinable income.* Income is fixed when it is to be paid in amounts definitely predetermined. Income is determinable whenever there is a basis of calculation by which the amount to be paid may be ascertained. The income need not be paid annually or at regular intervals. The fact that the payments may be increased or decreased in accordance with the happening of an event does not for purposes of this section make the payments any the less determinable. A salesman working by the month for a commission on sales which is paid or credited monthly receives determinable income.

(d) *Payments specifically included*—(1) *In general.* Amounts paid in respect of life insurance, endowment, or annuity contracts are required to be reported in returns of information under this section—

(i) Unless the payment is made in respect of a life insurance or endowment contract by reason of the death of the insured and is not required to be reported by paragraph (b) of § 1.6041–2,

(ii) Unless the payment is made by reason of the surrender prior to maturity or lapse of a policy, other than a policy which was purchased *(a)* by a trust described in section 401(a) which is exempt from tax under section 501(a), *(b)* as part of a plan described in section 403(a), or *(c)* by an employer described in section 403(b) (1) (A),

(iii) Unless the payment is interest as defined in § 1.6049–2 and is made after December 31, 1962,

(iv) Unless the payment is a payment with respect to which a return is required by § 1.6047–1, relating to employee retirement plans covering owner-employees,

(v) Unless the payment is payment with respect to which a return is required by § 1.6052–1, relating to payment of wages in the form of group-term life insurance.

(2) *Professional fees.* Fees for professional services paid to attorneys, physicians, and members of other professions are required to be reported in returns of information if paid by persons engaged in a trade or business and paid in the course of such trade or business.

(3) *Prizes and awards.* Amounts paid as prizes and awards that are required to be included in gross income under section 74 and § 1.74–1 when paid in the course of a trade or business are required to be reported in returns of information under this section.

(4) *Disability payments.* Amounts paid as disability payments under section

105(d) are required to be reported in returns of information under this section.

(5) *Notional principal contracts.* Except as provided in paragraphs (b)(5)(i) and (ii) of this section, amounts paid after December 31, 2000, with respect to notional principal contracts referred to in §1.863–7 or 1.988–2(e) to persons who are not described in §1.6049–4(c)(1)(ii) are required to be reported in returns of information under this section. The amount required to be reported under this paragraph (d)(5) is limited to the amount of cash paid from the notional principal contract as described in §1.446–3(d). A non-periodic payment is reportable for the year in which an actual payment is made. Any amount of interest determined under the provisions of §1.446–3(g)(4) (dealing with interest in the case of a significant nonperiodic payment) is reportable under this paragraph (d)(5) and not under section 6049 (see §1.6049–5(b)(15)). See §1.6041–4(a)(4) for reporting exceptions regarding payments to foreign persons. See, however, §1.1461–1(c)(1) for reporting amounts described under this paragraph (d)(5) that are paid to foreign persons. The provisions of §1.6049–5(d) shall apply for determining whether a payment with respect to a notional principal contract is made to a foreign person. See §1.6049–4(a) for a definition of payor. For purposes of this paragraph (d)(5), a payor includes a middleman defined in §1.6049–4(f)(4).

(i) An amount paid with respect to a notional principal contract is not required to be reported if the payment is made outside the United States (as defined in §1.6049–5(e)) by a non-U.S. payor or a non-U.S. middleman.

(ii) An amount paid with respect to a notional principal contract is not required to be reported if the payment is made outside the United States (as defined in §1.6049–5(e)) by a payor that has no actual knowledge that the payee is a U.S. person, and the payor is—

(A) A U.S. payor or U.S. middleman that is not a U.S. person (such as a controlled foreign corporation defined in section 957(a) or certain foreign corporations or foreign partnerships engaged in a U.S. trade or business); or

(B) A foreign branch of a U.S. bank. See §1.6049–5(c)(5) for a definition of a U.S. payor, a U.S. middleman, a non-U.S. payor, and a non-U.S. middleman.

(e) *Payment made in medium other than cash.* If any payment required to be reported on Form 1099 is made in property other than money, the fair market value of the property at the time of payment is the amount to be included on such form.

(f) *When payment deemed made.* For purposes of a return of information, an amount is deemed to have been paid when it is credited or set apart to a person without any substantial limitation or restriction as to the time or manner of payment or condition upon which payment is to be made, and is made available to him so that it may be drawn at any time, and its receipt brought within his own control and disposition.

(g) *Payments made by the United States or a State.* Information returns on:

(1) Forms 1096 and 1099 and

(2) Forms W–3 and W–2 (when made under the provisions of §1.6041–2)

of payments made by the United States or a State, or political subdivision thereof, or the District of Columbia, or any agency or instrumentality of any one or more of the foregoing, shall be made by the officer or employee of the United States, or of such State, or political subdivision, or of the District of Columbia, or of such agency or instrumentality, as the case may be, having control of such payments or by the officer or employee appropriately designated to make such returns.

[T.D. 6500, 25 FR 12108, Nov. 26, 1960, as amended by T.D. 6628, 27 FR 12794, Dec. 28, 1962, T.D. 6888, 31 FR 9205, July 6, 1966; T.D. 7284, 38 FR 20827, Aug. 3, 1973; T.D. 7580, 43 FR 60159, Dec. 26, 1978; T.D. 7888, 48 FR 17587, Apr. 25, 1983; T.D. 8458, 57 FR 61313, Dec. 24, 1992; T.D. 8734, 62 FR 53471, Oct. 14, 1997; T.D. 8804, 64 FR 11378, Mar. 9, 1999; T.D. 8881, 65 FR 32205, May 22, 2000]

§ 1.6041–2 Return of information as to payments to employees.

(a)(1) *In general.* Wages, as defined in section 3401, paid to an employee are required to be reported on Form W–2. See section 6011 and the Employment Tax Regulations thereunder. All other payments of compensation, including the cash value of payments made in

any medium other than cash, to an employee by his employer in the course of the trade or business of the employer must also be reported on Form W–2 if the total of such payments and the amount of the employee's wages (as defined in section 3401), if any, required to be reported on Form W–2 aggregates $600 or more in a calendar year. For example, if a payment of $700 was made to an employee and $400 thereof represents wages subject to withholding under section 3402 and the remaining $300 represents compensation not subject to withholding, such wages and compensation must both be reported on Form W–2. A separate Form W–2 shall be furnished for each employee for whom a return must be made. At the election of the employer, components of amounts required to be reported on Form W–2 pursuant to the provisions of this subparagraph may be reported on more than one Form W–2.

(2) *Transmittal form.* The transmittal form for a return on Form W–2 made pursuant to the provisions of subparagraph (1) of this paragraph shall be Form W–3. In a case where an employer must file a Form W–3 under this paragraph and also under § 31.6011(a)–4 or § 31.6011(a)–5 of this chapter (Employment Tax Regulations), the Form W–3 filed under such § 31.6011(a)–4 or § 31.6011(a)–5 shall also be used as the transmittal form for a return on Form W–2 made pursuant to the provisions of this paragraph.

(3) *Time for filing*—(i) *General rule.* In a case where an employer must file Forms W–3 and W–2 under this paragraph and also under § 31.6011(a)–4 or § 31.6011(a)–5 of this chapter (Employment Tax Regulations), the time for filing such forms under this paragraph shall be the same as the time (including extensions thereof) for filing such forms under § 31.6011(a)–4 or § 31.6011(a)–5.

(ii) *Exception.* In a case where an employer is not required to file Forms W–3 and W–2 under § 31.6011(a)–4 or § 31.6011(a)–5 of this chapter, returns on Forms W–3 and W–2 required under this paragraph (a) for any calendar year shall be filed on or before February 28 (March 31 if filed electronically) of the following year.

(iii) *Cross reference.* For extensions of time for filing returns, see section 6081 and the regulations thereunder.

(4) *Place for filing.* The returns on Forms W–3 and W–2 required under this paragraph shall be filed pursuant to the rules contained in § 31.6091–1 of this chapter (Employment Tax Regulations), relating to the place for filing certain returns.

(b) *Distributions under employees' trust or plan.* (1) Amounts which are:

(i) Distributed or made available to a beneficiary, and to which section 402 (relating to employees' trusts) or section 403 (relating to employee annuity plans) applies, or

(ii) Described in section 72(m)(3)(B), shall be reported on Forms 1096 and 1099 to the extent such amounts are includible in the gross income of such beneficiary if the amounts so includible aggregate $600 or more in any calendar year. In addition, every trust described in section 501(c)(17) which makes one or more payments (including separation and sick and accident benefits) totaling $600 or more in 1 year to an individual must file an annual information return on Form 1096, accompanied by a statement on Form 1099, for each such individual. Payments made by an employer or a person other than the trustee of the trust should not be considered in determining whether the $600 minimum has been paid by the trustee. The provisions of this subparagraph shall not be applicable to payments of supplemental unemployment compensation benefits made after December 31, 1970, which are treated as if they were wages for purposes of section 3401(a). Such amounts are required to be reported on Forms W–3 and W–2. See paragraph (b)(14) of § 31.3401(a)–1 of this chapter (Employment Tax Regulations).

(2) Any amount with respect to which a statement is required by § 1.6047–1, relating to employee retirement plans covering owner-employees, shall not be included in amounts required to be reported under section 6041.

(c) *Payments to foreign persons.* See § 1.6041–4 for reporting exemptions regarding payments to foreign persons.

See § 1.6049–5(d) for determining whether a payment is made to a foreign person.

[T.D. 7284, 38 FR 20827, Aug. 3, 1973, as amended by T.D. 7580, 43 FR 60159, Dec. 26, 1978; T.D. 8734, 62 FR 53472, Oct. 14, 1997; T.D. 8895, 65 FR 50406, Aug. 18, 2000]

§ 1.6041–2T Return of information as to payments to employees (temporary).

(a)(1) through (4) [Reserved]

(5) *Statement for employees.* An employer that is required under § 1.6041–2(a) to file Form W–2 with respect to an employee is also required under section 6041(d) and 6051 to furnish a written statement to the employee. This written statement must be furnished on Form W–2 in accordance with section 6051 and the regulations.

(b) and (c). For further guidance, see § 1.6041–2(b) and (c).

[T.D. 8942, 66 FR 10193, Feb. 14, 2001]

§ 1.6041–3 Payments for which no return of information is required under section 6041.

Returns of information are not required under section 6041 and §§ 1.6041–1 and 1.6041–2 for payments described in paragraphs (a) through (q) of this section. See § 1.6041–4 for reporting exemptions regarding payments to foreign persons.

(a) Payments of income required to be reported on Forms 1120–S, 941, W–2, and W–3 (however, see § 1.6041–2(a) with respect to Forms W–2 and W–3).

(b) Payments by a broker to his customer (but for reporting requirements as to certain of such payments, see sections 6042, 6045, and 6049 and the regulations thereunder in this part).

(c) Payments of bills for merchandise, telegrams, telephone, freight, storage, and similar charges.

(d) Payments of rent made to real estate agents (but the agent is subject to the requirements of paragraph (a)(1)(ii) and (2)(ii) of § 1.6041–1).

(e) Payments representing earned income for services rendered without the United States made to a citizen of the United States, if it is reasonable to believe that such amounts will be excluded from gross income under the provisions of section 911 and the regulations thereunder.

(f) Compensation and profits paid or distributed by a partnership to the individual partners (but for reporting requirements, see § 1.6031–1).

(g) Payments of commissions to general agents by fire insurance companies or other companies insuring property, except when specifically directed by the Commissioner to be filed.

(h)(1) *In general.* Payments made under reimbursement or other expense allowance arrangements that meet the requirements of section 62(c) of the Code and § 1.62–2, that do not exceed the amount of the expenses substantiated (i.e., amounts which are treated as paid under an accountable plan), and that are received by an employee on or after January 1, 1989, with respect to expenses paid or incurred on or after January 1, 1989.

(2) *Transition rule.* Payments made under reimbursement or other expense allowance arrangements that are received by an employee on or after January 1, 1989, but prior to July 1, 1990, to the extent that the employee is required to account (within the meaning of the term ''account'' as set forth in § 1.162–17(b)(4) or 1.274–5T(f)(4), whichever is applicable) and does so account to the payor for such expenses, provided the payor has made a reasonable, good faith effort to comply with the requirements of section 62(c). In general, compliance with the provisions of this section, as in effect for payments made under reimbursement or other expense allowance arrangements that were received by an employee before January 1, 1989, with respect to expenses paid or incurred before January 1, 1989, will constitute such reasonable good faith compliance. In no event, however, will reasonable good faith compliance exist if a payor fails to report payments made under an arrangement (other than a per diem or mileage allowance type arrangement) under which an employee is not required to substantiate expenses paid or incurred or is not required to return amounts in excess of the substantiated expenses.

(i) Payments of interest on obligations of the United States, or a State, Territory, or political subdivision thereof, or the District of Columbia, or any agency or instrumentality of any one or more of the foregoing (but for

requirements for reporting certain such payments by the United States or any agency or instrumentality thereof, see §§ 1.1461–1 to 1.1461–3, inclusive).

(j) Payments of interest on corporate bonds (but for reporting requirements as to payments on certain corporate bonds, see § 1.6049–5.

(k) Amounts paid as an allowance or reimbursement for traveling or other bona fide ordinary and necessary expenses, including an allowance for meals and lodging or a per diem allowance in lieu of subsistence, to persons in the service of an international organization (without regard to whether there is a requirement to account for such amounts) if-

(1) The organization is designated as an international organization by the President of the United States in Executive Orders issued pursuant to 22 U.S.C. 288, and

(2) The organization has immunity with respect to the invoilability of its archives pursuant to an international agreement having full force and effect in the United States.

(l) A payment to an informer as an award, fee, or reward for information relating to criminal activity, but only if such payment is made by the United States, a State, Territory, or political subdivision thereof, or the District of Columbia, or any agency or instrumentality of any one or more of the foregoing, or, with respect to payments made after December 31, 1987, by an organization that is described in section 501(c)(3) and that makes such payments in furtherance of a charitable purpose to lessen the burdens of government within the meaning of § 1.501(c)(3)–1(d)(2).

(m) On and after September 9, 1968, payments by a person carrying on the banking business of interest on a deposit evidenced by a negotiable time certificate of deposit (but for reporting requirements as to payments made after December 31, 1962, of interest on certain deposits, see sec. 6049 and the regulations thereunder in this part).

(n) Payments made to principals by persons carrying on the banking business, and by persons which are mutual savings banks, cooperative banks, building and loan associations, homestead associations, credit unions, or similar organizations chartered and supervised by Federal or State law, of funds collected when acting in the capacity of collection agents. This exception does not apply to collection of items on a regular and continuing basis under a so-called escrow, trust, custody, or investment advisory agreement. However, returns of information are not required unless payment is of the type with respect to which such returns would otherwise be required under section 6041 if the payer were engaged in a trade or business; nor are returns of information required on payments pursuant to a trust with respect to which Form 1041 is required to be filed by the trustee. The exception from reporting set forth in this paragraph shall apply until such time as the Commissioner determines that it is feasible for such persons to report the payments, and this paragraph is amended accordingly to require such reporting.

(o) Payments to individuals as scholarships or fellowship grants within the meaning of section 117(b)(1), whether or not ''qualified scholarships'' as described in section 117(b). This exception does not apply to any amount of a scholarship or fellowship grant that represents payment for services within the meaning of section 117(c). Instead, these amounts are required to be reported as wages on Form W–2. See § 1.1461–1(c) for applicable reporting requirements for amounts paid to foreign persons.

(p) Per diem of certain alien trainees described under section 1441(c)(6).

(q) Payments made to the following persons:

(1) A corporation described in § 1.6049–4(c)(1)(ii)(A), except a corporation engaged in providing medical and health care services or engaged in the billing and collecting of payments in respect to the providing of medical and health care services. However, no reporting is required where payment is made to a hospital or extended care facility described in section 501(c)(3) which is exempt from taxation under section 501(a) or to a hospital or extended care facility owned and operated by the United States, a State, the District of Columbia, a possession of the United

States, or a political subdivision, agency or instrumentality of any of the foregoing. For reporting requirements as to payments by cooperatives, and to certain other payments, see sections 6042, 6044, and 6049 and the regulations thereunder in this part.

(2) An organization exempt from taxation under section 501(a), as described in §1.6049–4(c)(1)(ii)(B)(*1*), or an individual retirement plan, as described in §1.6049–4(c)(1)(ii)(C).

(3) The United States, as described in §1.6049–4(c)(1)(ii)(D).

(4) A State, the District of Columbia, a possession of the United States, or any political subdivision of any of the foregoing, as described in §1.6049–4(c)(1)(ii)(E).

(5) A foreign government or political subdivision of a foreign government, as described in §1.6049–4(c)(1)(ii)(F).

(6) An international organization, as described in §1.6049–4(c)(1)(ii)(G).

(7) A foreign central bank of issue, as described in §1.6049–4(c)(1)(ii)(H) and the Bank for International Settlements.

(8) Any wholly owned agency or instrumentality of any person described in paragraph (q) (2), (3), (4), (5), (6), or (7) of this section.

[T.D. 6500, 25 FR 12108, Nov. 26, 1960]

EDITORIAL NOTE: For FEDERAL REGISTER citations affecting §1.6041–3, see the List of CFR Sections Affected, which appears in the Finding Aids section of the printed volume and on GPO Access.

§ 1.6041–4 Foreign-related items and other exceptions.

(a) *Exempted foreign-related items*—(1) Returns of information are not required for payments that a payor can, prior to payment, associate with documentation upon which it may rely to treat as made to a foreign beneficial owner in accordance with §1.1441–1(e)(1)(ii) or as made to a foreign payee in accordance with §1.6049–5(d)(1) or presumed to be made to a foreign payee under §1.6049–5(d)(2), (3), (4), or (5). However, such payments may be reportable under §1.1461–1(b) and (c). For purposes of this paragraph (a)(1), the provisions in §1.6049–5(c) (regarding rules applicable to documentation of foreign status and definition of U.S. payor and non-U.S. payor) shall apply. See §1.1441–1(b)(3)(iii)(B) and (C) for special payee rules regarding scholarships, grants, pensions, annuities, etc. The provisions of §1.1441–1 shall apply by substituting the term *payor* for the term *withholding agent* and without regard to the fact that the provisions apply only to amounts subject to withholding under chapter 3 of the Internal Revenue Code and the regulations under that chapter.

(2) Returns of information are not required for payments of amounts from sources outside the United States (determined under the provisions of part I, subchapter N, chapter 1 of the Internal Revenue Code and the regulations under those provisions) made by a non-U.S. payor or non-U.S. middleman outside the United States. For a definition of non-U.S. payor and non-U.S. middleman, see §1.6049–5(c)(5). For circumstances in which a payment is considered to be made outside the United States, see §1.6049–5(e).

(3) Returns of information are not required for amounts paid by a foreign intermediary described in §1.1441–1(c)(13) that it has received in its capacity as an intermediary and that are associated with a valid withholding certificate described in §1.1441–1(e)(3)(ii) or (iii) and payments made by a U.S. branch of a foreign bank or of a foreign insurance company described in §1.1441–1(b)(2)(iv) (other than a U.S. branch that is treated as a U.S. person) that are associated with a valid withholding certificate described in §1.1441–1(e)(3)(v), which certificate the intermediary or branch has furnished to the payor or middleman from whom it has received the payment, unless, and to the extent, the intermediary or branch knows that the payments are required to be reported under §1.6041–1 and were not so reported. For example, if a foreign intermediary or U.S. branch described in §1.1441–1(b)(2)(iv) fails to provide information regarding U.S. persons that are not exempt from reporting under §1.6041–3(q) to the person from whom the intermediary or U.S. branch receives the payment, the foreign intermediary or U.S. branch must report the payment on an information return. The exception of this paragraph (a)(3) shall not apply to a qualified intermediary that assumes reporting

responsibility under chapter 61 of the Internal Revenue Code.

(4) Returns of information are not required for amounts paid with respect to notional principal contracts referred to in § 1.863–7 or 1.988–2(e) which the payor may treat as effectively connected income of a foreign payee under the provisions of § 1.1441–4(a)(3) or if the payee provides a representation in a master agreement that governs the transactions in notional principal contracts between the parties (for example, an International Swap and Derivatives Association (ISDA) Agreement, including the Schedule thereto) or in the confirmation on the particular notional principal contract transaction that the counterparty is a foreign person. See, however, § 1.1461–1(c)(2)(i) for applicable reporting requirements.

(5) Returns of information are not required for the period that the amounts paid represent assets blocked as described in § 1.1441–2(e)(3). The exemption in this paragraph (a)(5) shall terminate when payment is deemed to occur in accordance with the provisions of § 1.1441–2(e)(3).

(6) For rules concerning direct sellers, see § 1.6041A–1(d)(3)(i)(C).

(b) *Joint owners.* Amounts paid to joint owners for which a certificate or documentation is required as a condition for being exempt from reporting under paragraph (a) of this section are presumed made to U.S. payees who are not exempt recipients if, prior to payment, the payor or middleman cannot reliably associate the payment either with a Form W–9 furnished by one of the joint owners in the manner required in §§ 31.3406(d)–1 through 31.3406(d)–5 of this chapter, or with documentation described in paragraph (a)(1) of this section furnished by each joint owner upon which the payor or middleman can rely to treat each joint owner as a foreign payee or foreign beneficial owner.

(c) *Conversion into United States dollars of amounts paid in foreign currency.* For rules concerning foreign currency conversion, see § 1.6049–4(d)(3)(i).

(d) *Effective date.* The provisions of this section apply to payments made after December 31, 2000.

[T.D. 8734, 62 FR 53473, Oct. 14, 1997, as amended by T.D. 8804, 63 FR 72188, Dec. 31, 1998; T.D. 8856, 64 FR 73412, Dec. 30, 1999; T.D. 8881, 65 FR 32205, May 22, 2000]

§ 1.6041–5 Information as to actual owner.

When a person receiving a payment described in section 6041 is not the actual owner of the income received, the name and address of the actual owner shall be furnished upon demand of the person paying the income, and in default of compliance with such demand the payee becomes liable for the penalties provided. See section 7203.

§ 1.6041–6 Returns made on Forms 1096 and 1099 under section 6041; contents and time and place for filing.

Returns made under section 6041 on Forms 1096 and 1099 for any calendar year shall be filed on or before February 28 (March 31 if filed electronically) of the following year with any of the Internal Revenue Service Centers, the addresses of which are listed in the instructions for such forms. The name and address of the person making the payment and the name and address of the recipient of the payment shall be stated on Form 1099. If the present address of the recipient is not available, the last known post office address must be given. See section 6109 and the regulations thereunder for rules requiring the inclusion of identifying numbers in Form 1099.

[T.D. 7284, 38 FR 20828, Aug. 3, 1973, as amended by T.D. 8895, 65 FR 50406, Aug. 18, 2000]

§ 1.6041–7 Magnetic media requirement.

(a) *General.* For rules relating to permission to submit the information required by Form 1099 or W–2 on magnetic tape or other media, see § 1.9101–1. See also paragraph (b)(2) of § 31.6011(a)–7 of this chapter (Employment Tax Regulations) for additional rules relating to Form W–2. High-volume filers of information returns must file their returns on magnetic media.

See section 6011(e) and § 301.6011–2 of this chapter (Procedure and Administration Regulations) for the requirements for filing on magnetic media.

(b) *Returns on magnetic tape by departments of health care carriers.* (1) For calendar years beginning on or after January 1, 1971, a health care carrier, or an agent thereof, making payment of fees or other compensation to providers of medical and health care services, may make a separate return on magnetic tape for each separate department within a specific line of such carrier's business, so long as all of such returns taken together contain all of the information required by section 6041 with respect to each provider of medical and health care services to whom such health care carrier makes payments aggregating $600 or more during the calendar year. Examples of separate departments within a specific line of such carrier's business (such as health and accident insurance) include, but are not limited to, separate departments to process claims of individual and group policyholders; and separate departments established along geographic lines.

(2) For purposes of this paragraph, the term ''health care carrier'' means any person making health care payments: (i) In exchange for the payment of a premium, (ii) in accordance with an employee benefit program, or (iii) in connection with a government-sponsored health care program.

[T.D. 7106, 36 FR 6422, Apr. 3, 1971, as amended by T.D. 8734, 62 FR 53473, Oct. 14, 1997]

§ 1.6041–8 Cross-reference to penalties.

For provisions relating to the penalty provided for failure to file timely a correct information return required under section 6041(a) or (b), see § 301.6721–1 of this chapter (Procedure and Administration Regulations). For provisions relating to the penalty provided for failure to furnish timely a correct payee statement required under section 6041(d), see § 301.6722–1 of this chapter. See § 301.6724–1 of this chapter for the waiver of a penalty if the failure is due to reasonable cause and is not due to willful neglect.

[T.D. 8734, 62 FR 53474, Oct. 14, 1997]

§ 1.6041A–1 Returns regarding payments of remuneration for services and certain direct sales.

(a) through (c) [Reserved]

(d) *Exceptions to return requirement.* [Reserved]

(1) and (2) [Reserved]

(3) *Foreign transactions*—(i) *In general.* No return shall be required under section 6041A with respect to payments described in this paragraph (d)(3).

(A) Returns of information are not required for payments that a payor can, prior to payment, associate with documentation upon which it may rely to treat as made to a foreign beneficial owner in accordance with § 1.1441–1(e)(1)(ii) or as made to a foreign payee in accordance with § 1.6049–5(d)(1) or presumed to be made to a foreign payee under § 1.6049–5(d)(2), (3), (4), or (5). However, such payments may be reportable under § 1.1461–1(b) and (c). For purposes of this paragraph (d)(3)(i)(A), the provisions in § 1.6049–5(c) (regarding rules applicable to documentation of foreign status and definition of U.S. payor and non-U.S. payor) shall apply. The provisions of § 1.1441–1 shall apply by substituting the term *payor* for the term *withholding agent.*

(B) Returns of information are not required for payments of remuneration for services from sources outside the United States (determined under the provisions of part I, subchapter N, chapter 1 of the Internal Revenue Code and the regulations under those provisions) if payments are made outside the United States by a non-U.S. payor or non U.S. middleman. For a definition of non U.S. payor or non-U.S. middleman, see § 1.6049–5(c)(5). For circumstances in which a payment is considered to be made outside the United States, see § 1.6049–5(e).

(C) Returns of information are not required under sections 6041 or 6041A for amounts paid outside of the United States (within the meaning of § 1.6049–5(e)) as remuneration for services as a direct seller (within the meaning of section 3508) performed outside of the United States or for sales described in section 6041A(b) made outside of the United States of consumer products for resale outside of the United States.

(ii) *Payor*. The term *payor* has the same meaning as described in § 1.6049–4(a)(2).

(iii) *Joint owners*. Amounts paid to joint owners for which a certificate or documentation is required as a condition for being exempt from reporting under paragraph (d)(3)(i) of this section are presumed made to U.S. payees who are not exempt recipients if, prior to payment, the payor or middleman cannot reliably associate the payment either with a Form W–9 furnished by one of the joint owners in the manner required in §§ 31.3406(d)–1 through 31.3406(d)–5 of this chapter, or with documentation described in paragraph (d)(3)(i)(A) of this section furnished by each joint owner upon which it can rely to treat each joint owner as a foreign payee or foreign beneficial owner.

(iv) *Conversion into United States dollars of amounts paid in foreign currency*. For rules concerning foreign currency conversion, see § 1.6049–4(d)(3)(i).

(v) *Effective date*. The provisions of this paragraph (d)(3) apply to payments made after December 31, 2000.

(e) [Reserved]

(f) *Statements to be furnished to persons with respect to whom information is required to be furnished*—(1) [Reserved]

(2) *Time for furnishing statement*. [Reserved]

(3) *Contents of statement*. [Reserved]

(g) [Reserved]

(h) *Cross-reference to penalties*. For provisions relating to the penalty provided for failure to file timely a correct information return required under section 6041A(a) or (b), see § 301.6721–1 of this chapter (Procedure and Administration Regulations). For provisions relating to the penalty provided for failure to furnish timely a correct payee statement required under section 6041A(e), see § 301.6722–1 of this chapter. See § 301.6724–1 of this chapter for the waiver of a penalty if the failure is due to reasonable cause and is not due to willful neglect.

[T.D. 8734, 62 FR 53474, Oct. 14, 1997, as amended by T.D. 8804, 63 FR 72188, Dec. 31, 1998; T.D. 8856, 64 FR 73412, Dec. 30, 1999; T.D. 8881, 65 FR 32205, May 22, 2000]

§ 1.6042–1 Return of information as to dividends paid in calendar years before 1963.

(a) *Requirement of return*—(1) *In general*. Except as provided in subparagraphs (2) and (3) of this paragraph, every domestic corporation, or foreign corporation engaged in business within the United States or having an office or place of business or a fiscal or paying agent in the United States, making payments during any calendar year before 1963 of $10 or more of dividends and distributions (other than distributions in liquidation) to any shareholder who is an individual (citizen or resident of the United States), a resident fiduciary, or a resident partnership any member of which is a citizen or resident shall file for the calendar year a return setting forth the amount of such payments for such calendar year. A separate return on Form 1099, showing the name and address of the payer and the shareholder, and the amount paid, shall be prepared with respect to each shareholder. These returns shall be accompanied by transmittal Form 1096.

(2) *Federal land bank associations and certain other corporations*. A corporation described in section 501(c) (12), (15), or (16), or section 521(b)(1), or a Federal land bank association or a production credit association, making a payment of a dividend, or a distribution, to any shareholder in any calendar year before 1963 shall file an information return with respect to such payments when they total $100 or more during the calendar year.

(3) *Savings and loan associations, etc*. A savings and loan association, a cooperative bank, a homestead association, a credit union, or a building and loan association is required to file an information return with respect to distributions made to a shareholder during any calendar year before 1963 only if the amount thereof paid to the shareholder during the calendar year, or such amount when aggregated with other payments made to the shareholder during such year of interest, rents, royalties, annuities, pensions, and other gains, profits, and income, as described in paragraph (a)(2)(ii) of § 1.6041–1, totals $600 or more. For this purpose, the term ''distributions to a shareholder'' includes periodical distributions of

earnings on running installment shares of stock paid or credited by a building and loan association to its holders of that class of stock, and the sum received upon withdrawal from a building and loan association in excess of the amounts paid in on account of membership fees and stock subscriptions, consisting of accumulated profits.

(b) *Nontaxable or partly nontaxable distributions.* In the case of a distribution which is made from a depletion or depreciation reserve, or which for any other reason is deemed by the corporation to be nontaxable or partly nontaxable to its shareholders, the corporation shall fill in the information on both sides of Form 1096.

(c) *Information as to actual owner*—(1) *In general.* When the person receiving a payment with respect to which an information return is required under authority of the Code is not the actual owner of the income received, the name and address of the actual owner or payee shall be furnished upon demand of the person paying the income, and in default of a compliance with such demand the payee becomes liable for the penalties provided. See section 7203. Dividends on stock are prima facie the income of the record owner of the stock. If a record owner of stock who is not the actual owner thereof receives dividends on such stock in any calendar year before 1963, he shall file a Form 1087 disclosing the name and address of the actual owner or payee, the name of the issuing corporation, the number of shares of such stock, and the amount of dividends received with respect to such stock during the calendar year. (For the reporting by a nominee of dividends received by him on behalf of another person in any calendar year after 1962, see §1.6042–2.) Unless such a disclosure is made the record owner will be held liable for any tax based upon such dividends. A separate Form 1087 shall be filed by the record owner for each of the stockholdings of each actual owner for whom he acts as nominee. However, where the record owner is a banking institution, trust company, or brokerage firm, it may, provided it maintains such records as will permit a prompt substantiation of each payment of dividends made to the actual owner, file one Form 1087 for each actual owner for whom it acts as nominee and report thereon the total amount of the dividends paid to such actual owner (without itemization as to the issuing company, class of stock, etc.).

(2) *Exceptions.* The filing of Form 1087 is not required if:

(i) The record owner is required to file a fiduciary return on Form 1041, or a withholding return on Form 1042, disclosing the name and address of the actual owner or payee;

(ii) The actual owner or payee is a nonresident alien individual, foreign partnership, or foreign corporation and the tax has been withheld at the source before receipt of the dividends by the record owner;

(iii) The record owner is a banking institution, a trust company, or a brokerage firm which prepares the individual income tax return of the actual owner, provided the verification on the return with respect to the preparation thereof is executed by such record owner;

(iv) The record owner is a nominee of a banking institution or trust company exercising trust powers, and such banking institution or trust company is required to file a fiduciary return on Form 1041 which reflects the name and address of the actual owner or payee;

(v) The actual owner is an organization exempt from taxation under section 501(a) and is exempt from the requirement of filing a return under section 6033 and paragraph (g) of §1.6033–1; or

(vi) The record owner is a banking institution or trust company exercising trust powers, or a nominee thereof, and the actual owner is an organization exempt from taxation under section 501(a) for which such banking institution or trust company files an annual return.

See §1.1441–1, relating to withholding of tax on nonresident alien individuals, and §1.1442–1, relating to withholding of tax on nonresident foreign corporations.

(d) *Time and place for filing.* Returns made under this section on Forms 1096 and 1099 and Form 1087 for any calendar year shall be filed on or before February 28 of the following year with any

of the Internal Revenue Service Centers, the addresses of which are listed in the instructions for such forms.

[T.D. 6500, 25 FR 12108, Nov. 26, 1960, as amended by T.D. 6628, 27 FR 12795, Dec. 28, 1962]

§ 1.6042–2 Returns of information as to dividends paid.

(a) *Requirement of reporting*—(1) *In general*. An information return on Form 1099 shall be made under section 6042(a) by—

(i) Every person who makes a payment of dividends (as defined in § 1.6042–3) to any other person during a calendar year. The information return shall show the aggregate amount of the dividends, the name, address, and taxpayer identifying number of the person to whom paid, the amount of tax deducted and withheld under section 3406 from the dividends, if any, and such other information as required by the forms. An information return is generally not required if the amount of dividends paid to the other person during the calendar year aggregates less than $10 or if the payment is made to a person who is an exempt recipient described in § 1.6049–4(c)(1)(ii) unless the payor backup withholds under section 3406 on such payment (because, for example, the payee has failed to furnish a Form W–9 on request), in which case the payor must make a return under this section, unless the payor refunds the amount withheld pursuant to § 31.6413(a)–3 of this chapter.

(ii) Every person, except to the extent that he acts as a nominee described in paragraph (a)(1)(iii) of this section, who receives payments of dividends as a nominee on behalf of another person shall make a return of information under this section for the calendar year of the payment . The information return shall show the aggregate amount of the dividends, the name, address, and taxpayer identification number of the person on whose behalf the dividends are received, the amount of tax deducted and withheld under section 3406 from the dividends, if any, and such other information as required by the forms. An information return is generally not required if the amount of the dividends received on behalf of the other person during the calendar year aggregates less than $10. However, a return of information is not required under this section if—

(A) The record owner is, pursuant to section 6012(a) (3) or (4) and § 1.6012–3, required to file a fiduciary return on Form 1041 that is filed for the estate or trust disclosing the name, address, and identifying number of both the record owner and actual owner and furnishes Form K–1 to each actual owner containing the information required to be shown on the form, including amounts withheld under section 3406;

(B) The record owner is a nominee of a banking institution or trust company exercising trust powers, and such banking institution or trust company is, pursuant to section 6012(a) (3) or (4) and § 1.6012–3, required to file a fiduciary return on Form 1041 that is filed for the estate or trust disclosing the name, address, and identifying number of both the record owner and the actual owner and furnishes Form K–1 to each actual owner containing the information required to be shown on the form, including amounts withheld under section 3406; or

(C) The record owner is a banking institution or trust company exercising trust powers, or a nominee thereof, and the actual owner is an organization exempt from taxation under section 501(a) for which such banking institution or trust company files an annual return but only if the name, address, and identifying number of the record owner are included on or with the annual return filed for the tax exempt organization).

(iii) Every person who is a nominee acting as a custodian of a unit investment trust described in section 851(f)(1) and paragraph (d) of § 1.851–7 who, during a calendar year after 1968, receives payments of dividends in such capacity, shall make an information return on Forms 1096 and 1099, for such calendar year showing the information required by such forms and instructions thereto and the name, address, and identifying number of the nominee identified as such. This subdivision shall not apply if the regulated investment company agrees with the nominee to satisfy the requirements of section 6042 and the regulations thereunder with respect to each holder of an

interest in the unit investment trust whose shares are being held by the nominee as custodian and within the time limit for furnishing statements prescribed by §1.6042–4, files with the Internal Revenue Service office where such company's return is to be filed for the taxable year, a statement that the holders of the unit investment trust with whom the agreement was made have been directly notified by the regulated investment company. Such statement shall include the name, sponsor, and custodian of each unit investment trust whose holders have been directly notified. The nominee's requirements under this subdivision shall be deemed met if the regulated investment company transmits a copy of such statement to the nominee within such period; provided, however, if the regulated investment company fails or is unable to satisfy the requirements of section 6042 with respect to the holders of interest in the unit investment trust, it shall so notify the Internal Revenue Service within 45 days following the close of its taxable year. The custodian shall, upon notice by the Internal Revenue Service that the regulated investment company has failed to comply with the agreement, satisfy the requirements of this subdivision within 30 days of such notice.

(2) *Definitions.* The term ''person'' when used in this section does not include the United States, a State, the District of Columbia, a foreign government, a political subdivision of a State or of a foreign government, or an international organization. Therefore, dividends paid by or to one of these entities need not be reported. For purposes of this section, a person who receives a dividend shall be considered to have received it as a nominee if he is not the actual owner of such dividend and if he was required under §1.6109–1 to furnish his identifying number to the payer of the dividend (or would have been so required if the total of such dividends for the year had been $10 or more), and such number was (or would have been) required to be included on an information return filed by the payer with respect to the dividend. However, a person shall not be considered to be a nominee as to any portion of a dividend which is actually owned by another person whose name is also shown on the information return filed by the payer or nominee with respect to such dividend. Thus, in the case of stock jointly owned by a husband and wife, the husband will not be considered as receiving any portion of a dividend on that stock as a nominee for his wife if his wife's name is included on the information return filed by the payer with respect to the dividend.

(3) *Determination of person to whom a dividend is paid or for whom it is received.* For purposes of applying the provisions of this section, the person whose identifying number is required to be included by the payer of a dividend on an information return with respect to such dividend shall be considered the person to whom the dividend is paid. In the case of a dividend received by a nominee on behalf of another person, the person whose identifying number is required to be included on an information return made by the nominee with respect to such dividend shall be considered the person on whose behalf such dividend is received by the nominee. Thus, in the case of a dividend made payable to a person other than the record owner of the stock with respect to which the dividend is paid, the record owner of the stock shall be considered the person to whom the dividend is paid for purposes of applying the reporting requirements in this section, since his identifying number is required to be included on the information return filed under this section by the payer of the dividend. Similarly, if a stockbroker receives a dividend on stock held in street name for the joint account of a husband and wife, the dividend is considered as received on behalf of the husband since his identifying number should be shown on the information return filed by the nominee under this section. Thus, if the wife has a separate account with the same stockbroker, any dividends received by the stockbroker for her separate account should not be aggregated with the dividends received for the joint account for purposes of information reporting. For regulations relating to the use of identifying numbers, see §1.6109–1.

(4) *Inclusion of other payments.* The Form 1099 filed by any person with respect to payments of dividends to another person during a calendar year may, at the election of the maker, include other payments made by him to such other person during such year which are required to be reported on Form 1099. Similarly, the Form 1099 filed by a nominee with respect to payments of dividends received by him on behalf of any other person during a calendar year may include payments of interest received by him on behalf of such person during such year which are required to be reported on Form 1099.

(b) *When payment deemed made.* For purposes of a return of information, an amount is deemed to have been paid when it is credited or set apart to a person without any substantial limitation or restriction as to the time or manner of payment or condition upon which payment is to be made, and is made available to him so that it may be drawn at any time, and its receipt brought within his own control and disposition.

(c) *Time and place for filing.* The returns required under this section for any calendar year shall be filed after September 30 of such year, but not before the payer's final payment for the year, and on or before February 28 (March 31 if filed electronically) of the following year with any of the Internal Revenue Service Centers, the addresses of which are listed in the instructions for Form 1096. For extensions of time for filing returns under this section, see § 1.6081–1.

(d) *Cross-reference to penalty.* For provisions relating to the penalty provided for failure to file timely a correct information return required under section 6042(a), see § 301.6721–1 of this chapter (Procedure and Administration Regulations). See § 301.6724–1 of this chapter for the waiver of a penalty if the failure is due to reasonable cause and is not due to willful neglect.

(e) *Magnetic media requirement.* For rules relating to permission to submit the information required by Form 1087 or 1099 on magnetic tape or other media, see § 1.9101–1. For the requirement to submit the information required by Form 1099 on magnetic media for payments after December 31, 1983, see section 6011(e) and § 301.6011–2 of this chapter (Procedure and Administration Regulations).

[T.D. 6628, 27 FR 12796, Dec. 29, 1962, as amended by T.D. 6677, 28 FR 10147, Sept. 17, 1963; T.D. 6879, 31 FR 3493, Mar. 8, 1966; T.D. 6883, 31 FR 6589, May 3, 1966; T.D. 7000, 34 FR 996, Jan. 23, 1969; T.D. 7187, 37 FR 13258, July 6, 1972; T.D. 8734, 62 FR 53474, Oct. 14, 1997; T.D. 8804, 64 FR 11378, Mar. 9, 1999; T.D. 8895, 65 FR 50406, Aug. 18, 2000]

§ 1.6042–3 Dividends subject to reporting.

(a) *In general.* Except as provided in paragraph (b) of this section, the term *dividend* for purposes of this section and §§ 1.6042–2 and 1.6042–4 means the amounts described in the following paragraphs (a) (1) through (3) of this section—

(1) Any distribution made by a corporation to its shareholders which is a dividend as defined in section 316; and

(2) Any payment made by a stockbroker to any person as a substitute for a dividend. Such a payment includes any payment made in lieu of a dividend to a person whose stock has been borrowed. See § 1.6045–2(h) for coordination of the reporting requirements under sections 6042 and 6045(d) with respect to such payments; and

(3) A distribution from a regulated investment company (irrespective of the fact that any part of the distribution may not represent ordinary income (i.e., may, for example, represent a capital gain dividend as defined in section 852(b)(3)(C)).

(b) *Exceptions*—(1) *In general.* For purposes of §§ 1.6042–2 and 1.6042–4, the amounts described in paragraphs (b)(1)(i) through (vii) of this section are not dividends.

(i) Amounts paid by an insurance company to a policyholder, other than a dividend upon its capital stock.

(ii) Payments (however denominated) by a mutual savings bank, savings and loan association, or similar organization, in respect of deposits, investment certificates, or withdrawable or repurchasable shares. See, however, section 6049 and the regulations under that section for provisions requiring reporting of these payments.

(iii) Distributions or payments that a payor can, prior to payment, reliably associate with documentation upon

which it may rely to treat as made to a foreign beneficial owner in accordance with §1.1441–1(e)(1)(ii) or as made to a foreign payee in accordance with §1.6049–5(d)(1) or presumed to be made to a foreign payee under §1.6049–5(d) (2), (3), (4), or (5). However, such payments may be reportable under §1.1461–1(b) and (c). For purposes of this paragraph (b)(1)(iii), the provisions in §1.6049–5(c) (regarding rules applicable to documentation of foreign status and definition of U.S. payor and non-U.S. payor) shall apply. The provisions of §1.1441–1 shall apply by substituting the term *payor* for the term *withholding agent* and without regard to the fact that the provisions apply only to amounts subject to withholding under chapter 3 of the Internal Revenue Code (Code).

(iv) Distributions or payments from sources outside the United States (as determined under the provisions of part I, subchapter N, chapter 1 of the Code and the regulations under those provisions) paid outside the United States by a non-U.S. payor or a non-U.S. middleman. For a definition of non-U.S. payor and non-U.S. middleman, see §1.6049–5(c)(5). For circumstances in which a payment is considered to be made outside the United States, see §1.6049–5(e).

(v) Distributions or payments for the period that the amounts represent assets blocked as described in §1.1441–2(e)(3). The exemption in this paragraph (b)(1)(v) shall terminate when payment is deemed to occur in accordance with the rules of §1.1441–2(e)(3).

(vi) Payments made by a foreign intermediary described in §1.1441–1(c)(13) of amounts that it has received in its capacity as an intermediary and that are associated with a valid withholding certificate described in §1.1441–1(e)(3)(ii) or (iii) and payments made by a U.S. branch of a foreign bank or of a foreign insurance company described in §1.1441–1(b)(2)(iv) (other than a U.S. branch that is treated as a U.S. person) that are associated with a valid withholding certificate described in §1.1441–1(e)(3)(v), which certificate the intermediary or branch has furnished to the payor or middleman from whom it has received the payment, unless, and to the extent, the intermediary or branch knows that the payments are required to be reported under §1.6042–2 and were not so reported. For example, if a foreign intermediary or U.S. branch described in §1.1441–1(b)(2)(iv) fails to provide information regarding U.S. persons that are not exempt from reporting under §1.6049–4(c)(1)(ii) to the person from whom the intermediary or U.S. branch receives the payment, the amount paid by the foreign intermediary or U.S. branch to such person is a dividend. The exception of this paragraph (b)(1)(vi) shall not apply to a qualified intermediary that assumes reporting responsibility under chapter 61 of the Internal Revenue Code.

(vii) With respect to amounts paid or credited after December 31, 1982, any amount paid or credited to any person described in §1.6049–4(c)(1)(ii), unless a tax is withheld under section 3406 and is not refunded by the payor in accordance with §31.6413(a)–3 of this chapter (Employment Tax Regulations).

(2) *Payor*. The term *payor* has the same meaning as described in §1.6049–4(a)(2).

(3) *Joint owners*. Amounts paid to joint owners for which a certificate or documentation is required as a condition for being exempt from reporting under this paragraph (b) are presumed made to U.S. payees who are not exempt recipients if, prior to payment, the payor or middleman cannot reliably associate the payment either with a Form W–9 furnished by one of the joint owners in the manner required in §§31.3406(d)–1 through 31.3406(d)–5 of this chapter, or with documentation described in paragraph (b)(1)(iii) of this section furnished by each joint owner upon which it can rely to treat each joint owner as a foreign payee or foreign beneficial owner. For purposes of applying this paragraph (b)(3), the grace period described in §1.6049–5(d)(2)(ii) shall apply only if each payee qualifies for such grace period.

(4) *Conversion into United States dollars of amounts paid in foreign currency*. For rules concerning foreign currency conversion, see §1.6049–4(d)(3)(i).

(5) *Effective date*—(i) *General rule*. The provisions of this paragraph (b) apply to payments made after December 31, 2000.

(ii) *Transition rules*. The validity of a withholding certificate (namely, Form

W–8 or other form upon which the payor is permitted to rely to hold the payee as a foreign person) that was valid on January 1, 1998, under the regulations in effect prior to January 1, 2001 (see 26 CFR parts 1 and 35a, revised April 1, 1999) and expired, or will expire, at any time during 1998, is extended until December 31, 1998. The validity of a withholding certificate that is valid on or after January 1, 1999, remains valid until its validity expires under the regulations in effect prior to January 1, 2001 (see 26 CFR parts 1 and 35a, revised April 1, 1999) but in no event shall such withholding certificate remain valid after December 31, 2000. The rule in this paragraph (b)(5)(ii), however, does not apply to extend the validity period of a withholding certificate that expires solely by reason of changes in the circumstances of the person whose name is on the certificate. Notwithstanding the first three sentences of this paragraph (b)(5)(ii), a payor may choose not to take advantage of the transition rule in this paragraph (b)(5)(ii) with respect to one or more withholding certificates valid under the regulations in effect prior to January 1, 2001 (see 26 CFR parts 1 and 35a, revised April 1, 1999) and, therefore, to require withholding certificates conforming to the requirements described in this section (new withholding certificates). For purposes of this section, a new withholding certificate is deemed to satisfy the documentation requirement under the regulations in effect prior to January 1, 2001 (see 26 CFR parts 1 and 35a, revised April 1, 1999). Further, a new withholding certificate remains valid for the period specified in §1.1441–1(e)(4)(ii), regardless of when the certificate is obtained.

(c) *Special rule.* If a person makes a payment which may be a dividend, or if a nominee receives a payment which may be a dividend, but such person or nominee is unable to determine the portion of the payment which is a dividend (as defined in paragraphs (a) and (b) of this section) at the time he files his return under §1.6042–2, he shall, for purposes of such section, treat the entire amount of such payment as a dividend.

[T.D. 6628, 27 FR 12797, Dec. 28, 1962, as amended by T.D. 6908, 31 FR 16774, Dec. 31, 1966; T.D. 7987, 49 FR 42719, Oct. 24, 1984; T.D. 8029, 50 FR 23680, June 5, 1985; T.D. 8734, 62 FR 53475, Oct. 14, 1997; T.D. 8804, 63 FR 72186, Dec. 31, 1998; 64 FR 73411, Dec. 30, 1999; T.D. 8881, 65 FR 32205, May 22, 2000]

§1.6042–4 Statements to recipients of dividend payments.

(a) *Requirement.* A person required to make an information return under section 6042(a)(1) and §1.6042–2 must furnish a statement to each recipient whose identifying number is required to be shown on the related information return for dividend payments.

(b) *Form of the statement.* The statement required by paragraph (a) of this section must be either the official Form 1099 prescribed by the Internal Revenue Service for the respective calendar year or an acceptable substitute statement that contains provisions that are substantially similar to those of the official Form 1099 for the respective calendar year. For further guidance on how to prepare an acceptable substitute statement, see Rev. Proc. 95–30 (1995–27 I.R.B. 9) (or its successor), republished as ''Rules and Specifications for Private Printing of Substitute Forms 1096, 1098, 1099 Series, 5498, and W–2G.'' See §601.601(d)(2) of this chapter.

(c) *Aggregation of payments.* A payor may aggregate on one Form 1099 all payments made to a recipient with respect to each separate account during a calendar year.

(d) *Manner of providing statements to recipients*—(1) *In general.* The Form 1099, or acceptable substitute statement, must be provided to the recipient either in person or by first-class mail to the recipient's last known address in a statement mailing.

(2) *Statement mailing requirement.* The mailing required under section 6042(c) of a Form 1099 to a payee-recipient must qualify as a statement mailing. A statement mailing must contain the required Form 1099 or acceptable substitute statement (written statement) and must comply with enclosure and envelope restrictions.

(i) *Enclosure restrictions.* To qualify as a statement mailing, the mailing cannot contain any enclosures except those listed in this paragraph (d)(2)(i). Moreover, no promotional or advertising material is permitted in the mailing of the written statement. Even a *de minimis* amount of promotional or advertising material violates the statement mailing requirement. However, a logo on the envelope containing the written statement and on nontax enclosures described in paragraph (d)(2)(i)(A) through (D) of this section does not violate the written statement requirement. The written statement required under section 6042(c) and paragraph (a) of this section may be perforated to a check or to a statement of the recipient-payee's specific account with the payor described in paragraph (d)(2)(i)(A) or (C) of this section. The enclosure to which the written statement is perforated must contain, in a bold and conspicuous type, the legend: ''Important Tax Return Document Attached.'' The enclosures permitted in a mailing are limited to—

(A) A check with respect to the account reported on the written statement;

(B) A letter explaining why a check with respect to such account is not enclosed with the written statement (for example, because a dividend has not been declared payable);

(C) A statement of the taxpayer-recipient's specific account with the payor if payments on such account are reflected on the written statement;

(D) A letter limited to an explanation of the tax consequences of the information set forth on the enclosed written statement;

(E) Payee statements related to other Forms 1099, Form 1098, and Form 5498 (or the account balance on a Form 5498), Forms W–2 and W–2G; and

(F) Any document concerning the solicitation of the Form W–9, as described in § 31.3406(h)–3(a) of this chapter, or of the Form W–8 as described in § 1.1441–1(e)(1).

(ii) *Envelope and delivery restrictions*—(A) *Envelope restrictions.* The outside of the envelope in which the written statement is mailed and each nontax enclosure enclosed in the envelope must contain, in a bold and conspicuous type, the legend: ''Important Tax Return Document Enclosed.'' For purposes of this paragraph (d)(2)(ii), a nontax enclosure is any item listed in paragraphs (d)(2)(i)(A) through (C) of this section. However, a payor is not required to include the legend on the outside of an envelope containing only the enclosures in paragraph (d)(2)(i)(D) through (F) of this section.

(B) *Delivery restrictions.* The requirement to provide the written statement in person or by first-class mail may be satisfied by sending the written statement and any enclosures described in paragraph (d)(2)(i) of this section by intra-office mail, provided that intra-office mail is used by the payor in sending account activity, balance information, and other correspondence to the payee. If a payor does not personally deliver the written statement (i.e., the Form 1099 or its acceptable substitute) to the recipient or mail it to the recipient in a statement mailing as described in this paragraph (d), the payor is considered to have failed to mail the statement required under section 6042(c) and will be subject to the penalty under section 6722.

(e) *Time for furnishing statements*—(1) *In general.* Each statement required by section 6042(c) and this section to be furnished to any person for a calendar year must be furnished to such person after November 30 of the year and on or before January 31 (February 10 in the case of a nominee filing under § 1.6042–2(a)(1)(iii)) of the following year, but no statement may be furnished before the final dividend for the calendar year has been paid. However, the statement may be furnished at any time after April 30 if it is furnished with the final dividend for the calendar year.

(2) *Extensions of time.* For good cause upon written application of the person required to furnish statements under this section, the Director, Martinsburg Computing Center, may grant an extension of time not exceeding 30 days in which to furnish such statements. The application must be addressed to the Director, Martinsburg Computing Center, and must contain a full recital of the reasons for requesting the extension to aid the Director in determining the period of the extension, if any, that will be granted. Such a request in the

form of a letter to the Director, Martinsburg Computing Center, signed by the applicant will suffice as an application. The application must be filed on or before the date prescribed in paragraph (e)(1) of this section.

(3) *Last day for furnishing statement.* For provisions relating to the time for performance of an act when the last day prescribed for performance falls on Saturday, Sunday, or a legal holiday, see section 7503 and § 301.7503–1 of this chapter (Regulations on Procedure and Administration).

(f) *Cross-reference to penalty.* For provisions relating to the penalty provided for failure to furnish timely a correct payee statement required under section 6042(c), see § 301.6722–1 of this chapter (Procedure and Administration Regulations). See § 301.6724–1 of this chapter for the waiver of a penalty if the failure is due to reasonable cause and is not due to willful neglect.

(g) *Effective date.* This section is effective for payee statements due after December 31, 1995, without regard to extensions. For the substantially similar statement mailing requirements that apply with respect to forms required to be filed after October 22, 1986, and before January 1, 1996, see Rev. Proc. 84–70 (1984–2 C.B. 716) (or successor revenue procedures). See § 601.601(d)(2) of this chapter.

[T.D. 8637, 60 FR 66110, Dec. 21, 1995, as amended by T.D. 8734, 62 FR 53476, Oct. 14, 1997]

§ 1.6043–1 Return regarding corporate dissolution or liquidation.

(a) *Requirement of returns.* Within 30 days after the adoption of any resolution or plan for or in respect of the dissolution of a corporation or the liquidation of the whole or any part of its capital stock, the corporation shall file a return on Form 966, containing the information required by paragraph (b) of this section and by such form. Such return shall be filed with the district director for the district in which the income tax return of the corporation is filed. Further, if after the filing of a Form 966 there is an amendment of or supplement to the resolution or plan, an additional Form 966, based on the resolution or plan as amended or supplemented, must be filed within 30 days after the adoption of such amendment or supplement. A return must be filed under section 6043 and this section in respect of a liquidation whether or not any part of the gain or loss to the shareholders upon the liquidation is recognized under the provisions of section 1002.

(b) *Contents of return*—(1) *In general.* There shall be attached to and made a part of the return required by section 6043 and paragraph (a) of this section a certified copy of the resolution or plan, together with any amendments thereof or supplements thereto, and such return shall in addition contain the following information:

(i) The name and address of the corporation;

(ii) The place and date of incorporation;

(iii) The date of the adoption of the resolution or plan and the dates of any amendments thereof or supplements thereto; and

(iv) The internal revenue district in which the last income tax return of the corporation was filed and the taxable year covered thereby.

(2) *Returns in respect of amendments or supplements.* If a return has been filed pursuant to section 6043 and this section, any additional return made necessary by an amendment of or a supplement to the resolution or plan will be deemed sufficient if it gives the date the prior return was filed and contains a duly certified copy of the amendment or supplement and all other information required by this section and by Form 966 which was not given in the prior return.

[T.D. 6500, 25 FR 12108, Nov. 26, 1960, as amended by T.D. 6949, 33 FR 5531, Apr. 9, 1968; T.D. 7926, 48 FR 55847, Dec. 16, 1983]

§ 1.6043–2 Return of information respecting distributions in liquidation.

(a) Unless the distribution is one in respect of which information is required to be filed pursuant to § 1.332–6(b), 1.368–3(a), or 1.1081–11, every corporation making any distribution of $600 or more during a calendar year to any shareholder in liquidation of the whole or any part of its capital stock shall file a return of information on

Forms 1096 and 1099, giving all the information required by such form and by the regulations in this part. A separate Form 1099 must be prepared for each shareholder to whom such distribution was made, showing the name and address of such shareholder, the number and class of shares owned by him in liquidation of which such distribution was made, and the total amount distributed to him on each class of stock. If the amount distributed to such shareholder on any class of stock consisted in whole or in part of property other than money, the return on such form shall in addition show the amount of money distributed, if any, and shall list separately each class of property other than money distributed, giving a description of the property in each such class and a statement of its fair market value at the time of the distribution. Such forms, accompanied by transmittal Form 1096 showing the number of Forms 1099 filed therewith, shall be filed on or before February 28 (March 31 if filed electronically) of the year following the calendar year in which such distribution was made with any of the Internal Revenue Service Centers, the addresses of which are listed in the instructions for Form 1096.

(b) If the distribution is in complete liquidation of a domestic corporation pursuant to a plan of liquidation in accordance with which all the capital stock of the corporation is cancelled or redeemed, and the transfer of all property under the liquidation occurs within some one calendar month pursuant to section 333, and any shareholder claims the benefit of such section, the return on Form 1096 shall show:

(1) The amount of earnings and profits of the corporation accumulated after February 28, 1913, determined as of the close of such calendar month, without diminution by reason of distributions made during such calendar month, but including in such computation all items of income and expense accrued up to the date on which the transfer of all the property under the liquidation is completed;

(2) The ratable share of such earnings and profits of each share of stock canceled or redeemed in the liquidation;

(3) The date and circumstances of the acquisition by the corporation of any or securities distributed to shareholders in the liquidation;

(4) If the liquidation is pursuant to section 333(g), a schedule showing the amount of earnings and profits to which the corporation has succeeded after December 31, 1963, pursuant to any corporate reorganization or pursuant to a liquidation to which section 332 applies, except earnings and profits which on December 31, 1963, constituted earnings and profits of a corporation referred to in section 333(g)(3), and except earnings and profits which were earned after such date by a corporation referred to in section 333(g)(3); and

(5) If the liquidation occurs after December 31, 1966, and is pursuant to section 333(g)(2), the amount of earnings and profits of the corporation accumulated after February 28, 1913, and before January 1, 1967, and the ratable share of such earnings and profits of each share of stock canceled or redeemed in the liquidation.

[T.D. 6500, 25 FR 12108, Nov. 26, 1960, as amended by T.D. 6949, 33 FR 5531, Apr. 9, 1968; T.D. 8734, 62 FR 53476, Oct. 14, 1997; T.D. 8804, 63 FR 72188, Dec. 31, 1998; T.D. 8895, 65 FR 50406, Aug. 18, 2000]

§ 1.6043–3 Return regarding liquidation, dissolution, termination, or substantial contraction of organizations exempt from taxation under section 501(a).

(a) *In general*—(1) *Requirement to provide information.* Except as provided in paragraph (b) of this section, for taxable years beginning after December 31, 1969, every organization which for any of its last 5 taxable years preceding any liquidation, dissolution, termination, or substantial contraction of the organization was exempt from taxation under section 501(a) shall provide the information will respect to such liquidation, dissolution, termination, or substantial contraction required by the instructions accompanying the organization's annual return of information. The information required by this section shall be provided with, and at the time prescribed for filing, the organization's annual return of information for the period during which any liquidation, dissolution (or the adopting

of a resolution or plan for the dissolution or liquidation in whole or part), termination or substantial contraction occurred with respect to the organization. An organization which is no longer exempt from taxation under section 501(a) shall use the annual return of information it would have been required to file when the organization was exempt.

(2) *Transitional rule.* In the case of an annual return of information of an organization which was filed before September 11, 1978, if the organization had failed to provide the information with such return in accordance with paragraph (a)(1) of this section, the organization may comply with this section by providing the information with the organization's first annual return of information filed after such date.

(b) *Exceptions.* The following organizations are not required to provide the information under paragraph (a) of this section:

(1) Churches, their integrated auxiliaries, or conventions or associations of churches;

(2) Any organization which is not a private foundation (as defined in section 509(a)) and the gross receipts of which in each taxable year are normally not more than $5,000;

(3) Any organization which has terminated its private foundation status under section 507(b)(1)(B) with respect to a liquidation, dissolution, termination, or substantial contraction which is in connection with the termination under section 507(b)(1)(B);

(4) Any organization described in section 401(a) if the employer who established such organization files a return which provides the information under paragraph (a) of this section;

(5) Any organization described in section 501(c)(1) and any corporation described in section 501(c)(2) which holds title to property for such 501(c)(1) organizations;

(6) Any organization described in section 501(c)(14)(A) subject to a group exemption letter issued to a state regulatory body; and

(7) Any subordinate unit of a central organization (other than a private foundation) which established its exempt status under the group ruling procedure of regulations § 601.201 (n)(7), if the central or parent organization files an annual information return for the group in accordance with § 1.6033–2(d); and

(8) Any organization no longer exempt from taxation under section 501(a) and which during the period of its exemption under such section was neither described in section 501(c)(3) nor a corporation described in section 501(c)(2) which held title to property for an organization described in section 501(c)(3).

The Commissioner may relieve any organization or class or organizations from filing the return required by section 6043(b) of this section, where it is determined that such information is not necessary for the efficient administration of the internal revenue laws.

(c) *Penalties.* For provisions relating to the penalty provided for failure to furnish any information required by this section, see section 6652(d) and the regulations thereunder.

(d) *Definitions.* (1)(i) The term ''substantial contraction'', as used in this section, shall include any partial liquidation or any other significant disposition of assets, other than transfers for full and adequate consideration or distributions out of current income. For purposes of this subparagraph, the term ''significant disposition of assets'' shall not include any disposition for a taxable year where the aggregate of—

(A) The dispositions for the taxable year and

(B) Where any disposition for the taxable year is part of a series of related dispositions made during such prior taxable years, the total of the related dispositions made during prior taxable years, is less than 25 percent of the fair market value of the net assets of the organization at the beginning of the taxable year (in the case of (A) of this subdivision) or at the beginning of the first taxable year in which any of the series of related dispositions was made (in the case of (B) of this subdivision). A ''significant disposition of assets'' may result from the transfer of assets to a single organization or to several organizations, and it may occur in a single taxable year (as in (A) of this subdivision) or over the course of two or more taxable years (as in (B) of this

subdivision). The determination whether a significant disposition has occurred through a series of related dispositions (within the meaning of (B) of this subdivision) will be determined from all the facts and circumstances of the particular case. Ordinarily, a distribution described in section 170(b)(1)(D)(ii) shall not be taken into account as a significant disposition of assets within the meaning of this subparagraph.

(ii) The provisions of this subparagraph may be illustrated by the following examples:

Example (1). M, an organization described is section 501(c)(4), is on the calendar year basis. It has net assets worth $100,000 as of January 1, 1971. In 1971, in addition to distributions out of current income, M transfers $10,000 to N, $10,000 to O, and $10,000 to P. Such dispositions to N, O, and P are not distributions described in section 170(b)(1)(E)(ii). N, O, and P are all organizations described in section 501(c)(4). Under subdivision (i)(*a*) of this subparagraph, M has made a significant disposition of its assets in 1971 since M has disposed of more than 25 percent of its net assets (with respect to the fair market value of such assets as of January 1, 1971). Thus. M is subject to the provisions of section 6043(b) and this section for the year 1971.

Example (2). U, a tax-exempt private foundation on the calendar year basis, has net assets worth $100,000 as of January 1, 1971. As part of a series of related dispositions in 1971 and 1972. U transfers in 1971, in addition to distributions out of current income, $10,000 to private foundation X and $10,000 to private foundation Y, and in 1972, in addition to distributions out of current income, U transfers $10,000 to private foundation Z. Such dispositions to X, Y, and Z are not distributions described in section 170(b)(1)(E)(ii). Under subdivision (i) of this subparagraph, U is treated as having made a series of related dispositions in 1971 and 1972. The aggregate of the 1972 disposition (under subdivision (i)(*a*)of this subparagraph) and the series of related dispositions (under subdivision (i)(*b*) of this subparagraph) is $30,000, which is more than 25 percent of the fair market value of U's net assets as of the beginning of 1971 ($100,000), the first year in which any such disposition was made. Thus, U has made a significant disposition of its assets and is subject to the provisions of section 6043(b) and this section for the year 1972.

Example (3). Assume in Example (1) that in 1973 M makes a $5,000 disposition related to the 1971 disposition. Under subdivision (i)(B) of this subparagraph M is treated as having made a series of related dispositions in 1971 and 1973. The aggregate of the 1971 disposition under subdivision (i)(A) of this subparagraph and the 1973 related disposition under subdivision (i)(B) of this subparagraph is $35,000, which is more than 25 percent of the fair market value of M's net assets as of the beginning of 1971, the first year in which any disposition was made. Thus M has made a significant disposition of its assets and is subject to the provisions of section 6043(b) and this section for the year 1973.

(2) For the definition of the term ''normally'' as used in paragraph (b)(2) of this section, see § 1.6033–2(g)(3).

(3) For examples of the term ''integrated auxiliaries'' as used in paragraph (b)(1) of this section, see § 1.6033–2(g)(1)(i)(*a*).

[T.D. 7563, 43 FR 40221, Sept. 11, 1978]

§ 1.6044–1 Returns of information as to patronage dividends with respect to patronage occurring in taxable years beginning before 1963.

(a) *Requirement*—(1) *In general.* Except as provided in subparagraph (2) of this paragraph, any corporation allocating to any patron in respect of patronage occurring in any taxable year of the corporation beginning before January 1, 1963, amounts aggregating $100 or more during a calendar year as patronage dividends, rebates, or refunds (whether in cash, merchandise, capital stock, revolving fund certificates, retain certificates, letters of advice, or in some other manner that discloses to each patron the amount of such dividend, rebate, or refund) shall for each such calendar year file a return of information with respect to such allocation on Forms 1096 and 1099. A separate Form 1099 shall be prepared for each patron showing the name and address of the patron to whom such allocation is made, and the amount of the allocation. The allocation shall be reported for the calendar year during which the allocation is made, regardless of whether the allocation is deemed for the purpose of section 522 to be made at the close of a preceding taxable year of the corporation.

(2) *Exception.* A return is not required under this section in the case of any corporation (including any cooperative or nonprofit corporation engaged in rural electrification) described in section 501(c) (12) or (15) which is exempt from tax under section 501(a), or in the case of any corporation subject to a tax

imposed by subchapter L, chapter 1, of the Code.

(b) *Time and place for filing*. Returns made under this section on Forms 1096 and 1099 for any calendar year shall be filed on or before February 28 of the following year with any of the Internal Revenue Service Centers, the addresses of which are listed in the instructions for such forms.

(c) *Definitions*. The terms ''cooperative association'', ''patron'', ''patronage dividends, rebates, and refunds'', and ''allocation'' are defined, for the purpose of this section, in paragraph (b) of § 1.522–1.

[T.D. 6500, 25 FR 12108, Nov. 26, 1960, as amended by T.D. 6628, 27 FR 12798, Dec. 28, 1962]

§ 1.6044–2 Returns of information as to payments of patronage dividends.

(a) *Requirement of reporting*—(1) *In general*. Except as provided in § 1.6044–4, every organization described in paragraph (b) of this section which makes payments with respect to patronage occurring on or after the first day of the first taxable year of the organization beginning after December 31, 1962, of amounts described in § 1.6044–3 aggregating $10 or more to any person during any calendar year shall make an information return on Forms 1096 and 1099 for the calendar year showing the aggregate amount of such payments, the name and address of the person to whom paid, the total of such payments for all persons, and such other information as is required by the forms. The organization is required to make an information return regardless of the amount of the payment if the tax imposed by section 3406 is required to be withheld. Thus, in the case of any amount subject to backup withholding under section 3406 and not refunded by the payor before the due date of the information return in accordance with the regulations under section 3406, an information return shall be made even if the payment is not generally reportable because it is made to an exempt recipient described in § 1.6049–4(c)(1)(ii) or the amount paid during the calendar year to the recipient aggregates less than $10.

(2) *Definitions*. The term ''person'' when used in this section does not include the United States, a State, the District of Columbia, a foreign government, a political subdivision of a State or of a foreign government, or an international organization. Therefore, payment of amounts described in § 1.6044–3 to one of these entities need not be reported.

(3) *Determination of person to whom a patronage dividend is paid*. For purposes of applying the provisions of this section, the person whose identifying number is required to be included by the cooperative on an information return with respect to a patronage dividend shall be considered the person to whom such dividend is paid. For regulations relating to the use of identifying numbers, see § 1.6109–1.

(4) *Inclusion of other payments*. The Form 1099 filed by an organization with respect to payments of patronage dividends made to any person during a calendar year may, at the election of the organization, include other payments made by it to such person during such year which are required to be reported on Form 1099.

(b) *Organizations subject to reporting requirement*. The organizations subject to the reporting requirements of paragraph (a) of this section are:

(1) Any organization exempt from tax under section 521 (relating to exemption of farmers' cooperatives from tax), and

(2) Any corporation operating on a cooperative basis other than an organization:

(i) Which is exempt from tax under chapter 1 (other than section 521), or

(ii) Which is subject to the provisions of part II of subchapter H of chapter 1 (relating to mutual savings banks, etc.), or subchapter L of chapter 1 (relating to insurance companies), or

(iii) Which is engaged in furnishing electric energy, or providing telephone service, to persons in rural areas.

(c) *When payment deemed made*. For purposes of this section, money or other property (except written notices of allocation) is deemed to have been paid when it is credited or set apart to a person without any substantial limitation or restriction as to the time or manner of payment or condition upon which payment is to be made, and is made available to him so that it may

be drawn at any time, and its receipt brought within his own control and disposition. A written notice of allocation is considered to have been paid when it is issued by the organization to the distributee. Similarly, a qualified check (as defined in section 1388(d)(4)) is considered to have been paid when it is issued to the distributee.

(d) *Time and place for filing*. The return required under this section on Forms 1096 and 1099 for any calendar year shall be filed after September 30 of such year, but not before the payer's final payment for the year, and on or before February 28 (March 31 if filed electronically) of the following year, with any of the Internal Revenue Service Centers, the addresses of which are listed in the instructions for such forms. For extensions of time for filing returns under this section, see § 1.6081–1.

(e) *Cross-reference to penalty*. For provisions relating to the penalty provided for failure to file timely a correct information return required under section 6044(a), see § 301.6721–1 of this chapter (Procedure and Administration Regulations). See § 301.6724–1 of this chapter for the waiver of a penalty if the failure is due to reasonable cause and is not due to willful neglect.

(f) *Magnetic media requirement*. For the requirement to submit the information required by Form 1099 on magnetic media for payments after December 31, 1983, see section 6011(e) and § 301.6011–2 of this chapter (Procedure and Administration Regulations). For rules relating to permission to submit the information required by Form 1099 on magnetic tape or other media, see § 1.9101–1.

[T.D. 6628, 27 FR 12798, Dec. 28, 1962, as amended by T.D. 6677, 28 FR 10147, Sept. 17, 1963; T.D. 6879, 31 FR 3493, Mar. 8, 1966; T.D. 6883, 31 FR 6589, May 3, 1966; T.D. 8734, 62 FR 53476, Oct. 14, 1997; T.D. 8895, 65 FR 50407, Aug. 18, 2000]

§ 1.6044–3 Amounts subject to reporting.

(a) *In general*. Except as provided in paragraph (c) of this section, the amounts subject to reporting under § 1.6044–2 are:

(1) Payments by all organizations subject to such reporting requirements of:

(i) Patronage dividends (as defined in section 1388(a)) paid in money, qualified written notices of allocation (as defined in section 1388(c)), or other property (except nonqualified written notices of allocation as defined in section 1388(d)); and

(ii) Amounts described in section 1382(b)(2) (relating to redemption of nonqualified written notices of allocation previously paid as patronage dividends) paid in money or property (except written notices of allocation); and

(2) Payments by farmers' cooperatives exempt from tax under section 521 of:

(i) Amounts described in section 1382(c)(2)(A) (relating to distributions with respect to earnings derived from sources other than patronage) paid in money, qualified written notices of allocation, or other property (except nonqualified written notices of allocation); and

(ii) Amounts described in section 1382(c)(2)(B) (relating to redemption of nonqualified written notices of allocation previously paid as distributions with respect to earnings derived from sources other than patronage) paid in money or other property (except written notices of allocation).

(b) *Special rules*. (1) If an organization makes a distribution consisting in whole or in part of a written notice of allocation and a qualified check and, at the time it files its return under § 1.6044–2, is unable to determine whether such written notice of allocation and such check constitute nonqualified written notices of allocation, such organization shall for purposes of such return treat such written notice of allocation as a qualified written notice of allocation and such qualified check as a payment in money.

(2) An amount described in paragraph (a) of this section is subject to reporting even though the organization paying such amount is allowed no deduction for it because it was not paid within the time prescribed in section 1382. Thus, a patronage dividend of $25 paid by a marketing cooperative must be reported even though it is paid after the end of the payment period (see section

1382(d)) for the organization's taxable year in which the patronage occurred.

(c) *Exceptions.* An amount described in paragraph (a) of this section does not include—

(1) Any amount described in § 1.6042–3(b); or

(2) With respect to amounts paid or credited after December 31, 1982, any amount paid or credited to any person described in § 1.6049–4(c)(1)(ii).

(d) *Determination of amount paid.* For purposes of § 1.6044–2 and this section, in determining the amount of any payment subject to reporting under paragraph (a) of this section:

(1) Property (other than a qualified written notice of allocation) shall be taken into account at its fair market value, and

(2) A qualified written notice of allocation shall be taken into account at its stated dollar amount.

[T.D. 6628, 27 FR 12798, Dec. 28, 1962, as amended by T.D. 8734, 62 FR 53476, Oct. 14, 1997]

§ 1.6044–4 Exemption for certain consumer cooperatives.

(a) *In general*—(1) *Determination of exemption.* Exemption from the reporting requirements of § 1.6044–2 shall, upon application therefor, be granted by the district director to any cooperative which he determines is primarily engaged in selling at retail goods or services of a type which is generally for personal, living, or family use. A cooperative is not exempt from the reporting requirements merely because it is an organization of a type to which section 6044(c) and this section relate. In order for the exemption from reporting to apply, it is necessary that the cooperative file an application in accordance with this section and obtain a determination of exemption.

(2) *Basis for exemption.* For a cooperative to qualify for the exemption from reporting provided by section 6044(c) and this section 85 percent of its gross receipts for the preceding taxable year, or 85 percent of its aggregate gross receipts for the preceding three taxable years, must have been derived from the sale at retail of goods or services of a type which is generally for personal, living, or family use. In determining whether an item is of a type that is generally for personal, living, or family use, an item which may be purchased either for such use or for business use and which when acquired for business purposes is generally purchased at wholesale will, when sold by a cooperative at retail, be treated as goods or services of a type generally for personal, living, or family use.

(3) *Period of exemption.* A determination of exemption from reporting shall apply beginning with the payments made during the calendar year in which the determination is made and shall automatically cease to be effective beginning with payments made after the close of the first taxable year of the cooperative in which less than 70 percent of its gross receipts is derived from the sale at retail of goods or services of a type which is generally for personal, living, or family use.

(b) *Application for exemption.* Application for exemption from the reporting requirements of section 6044 shall be made on Form 3491, and shall be filed with the district director for the internal revenue district in which the cooperative has its principal place of business.

[T.D. 6628, 27 FR 12799, Dec. 28, 1962]

§ 1.6044–5 Statements to recipients of patronage dividends.

(a) *Requirement.* A person required to make an information return under section 6044(a)(1) and § 1.6044–2 must furnish a statement to each recipient whose identifying number is required to be shown on the related information return for patronage dividends paid.

(b) *Form, manner, and time for providing statements to recipients.* The statement required by paragraph (a) of this section must be either the official Form 1099 prescribed by the Internal Revenue Service for the respective calendar year or an acceptable substitute statement. The rules under § 1.6042–4 (relating to statements with respect to dividends) apply comparably in determining the form of an acceptable substitute statement permitted by this section. Those rules also apply for purposes of determining the manner of and time for providing the Form 1099 or its acceptable substitute to a recipient under this section. However, each Form 1099 or acceptable substitute

statement required by this section must be furnished on or before January 31 of the following year, but no statement may be furnished before the final payment has been made for the calendar year.

(c) *Cross-reference to penalty*. For provisions relating to the penalty provided for failure to furnish timely a correct payee statement required under section 6044(e), see § 301.6722–1 of this chapter (Procedure and Administration Regulations). See § 301.6724–1 of this chapter for the waiver of a penalty if the failure is due to reasonable cause and is not due to willful neglect.

(d) *Effective date*. This section is effective for payee statements due after December 31, 1995, without regard to extensions. For the substantially similar statement mailing requirements that apply with respect to forms required to be filed after October 22, 1986, and before January 1, 1996, see Rev. Proc. 84–70 (1984–2 C.B. 716) (or successor revenue procedures). See § 601.601(d)(2) of this chapter.

[T.D. 8637, 60 FR 66111, Dec. 21, 1995, as amended by T.D. 8734, 62 FR 53476, Oct. 14, 1997]

§ 1.6045–1 Returns of information of brokers and barter exchanges.

(a) *Definitions*. The following definitions apply for purposes of this section, § 1.6045–2, and § 5f.6045–1 of this chapter:

(1) The term *broker* means any person (other than a person who is required to report a transaction under section 6043), U.S. or foreign, that, in the ordinary course of a trade or business during the calendar year, stands ready to effect sales to be made by others. A broker includes an obligor that regularly issues and retires its own debt obligations or a corporation that regularly redeems its own stock. However, with respect to a sale (including a redemption or retirement) effected at an office outside the United States, a broker includes only a person described as a U.S. payor or U.S. middleman in § 1.6049–5(c)(5). In addition, a broker does not include an international organization described in § 1.6049–4(c)(1)(ii)(G) that redeems or retires an obligation of which it is the issuer.

(2) The term *customer* means, with respect to a sale effected by a broker, the person (other than such broker) that makes the sale, if the broker acts as:

(i) An agent for such person in the sale;

(ii) A principal in the sale; or

(iii) The participant in the sale responsible for paying to such person or crediting to such person's account the gross proceeds on the sale.

(3) The term *security* means:

(i) A share of stock in a corporation (foreign or domestic);

(ii) An interest in a trust;

(iii) An interest in a partnership;

(iv) A debt obligation;

(v) An interest in or right to purchase any of the foregoing in connection with the issuance thereof from the issuer or an agent of the issuer or from an underwriter that purchases any of the foregoing from the issuer, or

(vi) An interest in a security described in paragraph (a)(3) (i) or (iv) (but not including options or executory contracts that require delivery of such type of security).

(4) The term *barter exchange* means any person with members or clients that contract either with each other or with such person to trade or barter property or services either directly or through such person. The term does not include arrangements that provide solely for the informal exchange of similar services on a noncommercial basis.

(5) The term *commodity* means:

(i) Any type of personal property or an interest therein (other than securities as defined in paragraph (a)(3)) the trading of regulated futures contracts in which has been approved by the Commodity Futures Trading Commission;

(ii) Lead, palm oil, rapeseed, tea, tin, or an interest in any of the foregoing; or

(iii) Any other personal property or an interest therein that is of a type the Secretary determines is to be treated as a ''commodity'' under this section, from and after the date specified in a notice of such determination published in the FEDERAL REGISTER.

(6) The term *regulated futures contract* means a regulated futures contract within the meaning of section 1256(b).

(7) The term *forward contract* means:

(i) An executory contract that requires delivery of a commodity in exchange for cash and which contract is not a regulated futures contract; or

(ii) An executory contract that requires delivery of personal property or an interest therein in exchange for cash, or a cash settlement contract, if such executory contract or cash settlement contract is of a type the Secretary determines is to be treated as a ''forward contract'' under this section, from and after the date specified in a notice of such determination published in the FEDERAL REGISTER.

(8) The term *closing transaction* means any termination of an obligation under a forward contract or a regulated futures contract.

(9) The term *sale* means any disposition of securities, commodities, regulated futures contracts, or forward contracts for cash, and includes redemptions of stock, retirements of indebtedness, and enterings into short sales. In the case of a regulated futures contract or a forward contract, the term ''sale'' means any closing transaction. When a closing transaction in a regulated futures contract involves making or taking delivery, the profit or loss on the contract is a sale, and, if delivery is made, such delivery is a separate sale. When a closing transaction in a forward contract involves making or taking delivery, the delivery is a sale without separation of the profit or loss on the contract from the profit or loss on the delivery, except that taking delivery for United States dollars is not a sale. The term ''sale'' does not include grants or purchases of options, exercises of call options, or enterings into contracts that require delivery of personal property or an interest therein.

(10) The term *effect* means, with respect to a sale, to act as:

(i) An agent for a party in the sale wherein the nature of the agency is such that the agent ordinarily would know the gross proceeds from the sale; or

(ii) A principal in such sale.

Acting as an agent or principal with respect to grants or purchases of options, exercises of call options, or enterings into contracts that require delivery of personal property or an interest therein is not of itself effecting a sale. A broker that has on its books a forward contract under which delivery is made effects such delivery.

(11) The term *foreign currency* means currency of a foreign country.

(12) The term *cash* means United States dollars or any convertible foreign currency.

(13) The term *person* includes any governmental unit and any agency or instrumentality thereof.

(b) *Examples.* The following examples illustrate the definitions in paragraph (a):

Example 1. The following persons generally are brokers within the meaning of paragraph (a)(1):

(i) A mutual fund, an underwriter of the mutual fund, or an agent for the mutual fund, any of which stands ready to redeem or repurchase shares in such mutual fund.

(ii) A professional custodian (such as a bank) that regularly arranges sales for custodial accounts pursuant to instructions from the owner of the property.

(iii) A depositary trust or other person who regularly acts as an escrow agent in corporate acquisitions, if the nature of the activities of the agent is such that the agent ordinarily would know the gross proceeds from sales.

(iv) A stock transfer agent for a corporation, which agent records transfers of stock in such corporation, if the nature of the activities of the agent is such that the agent ordinarily would know the gross proceeds from sales.

(v) A dividend reinvestment agent for a corporation that stands ready to purchase or redeem shares.

Example 2. The following persons are not brokers within the meaning of paragraph (1)(a) in the absence of additional facts that indicate the person is a broker:

(i) A stock transfer agent for a corporation, which agent daily records transfers of stock in such corporation, if the nature of the activities of the agent is such that the agent ordinarily would not know the gross proceeds from sales.

(ii) A person (such as a stock exchange) that merely provides facilities in which others effect sales.

(iii) An escrow agent or nominee if such agency is not in the ordinary course of a trade or business.

(iv) An escrow agent, otherwise a broker, which agent effects no sales other than such transactions as are incidental to the purpose of the escrow (such as sales to collect on collateral).

(v) A floor broker on a commodities exchange, which broker maintains no records with respect to the terms of sales.

(vi) A corporation that issues and retires long-term debt on an irregular basis.

(vii) A clearing organization.

Example 3. A, B, and C belong to a carpool in which they commute to and from work. Every third day, each member of the carpool provides transportation for the other two members. Because the carpool arrangement provides solely for the informal exchange of similar services on a noncommercial basis, the carpool is not a barter exchange within the meaning of paragraph (a)(4).

Example 4. X is an organization whose members include retail merchants, wholesale merchants, and persons in the trade or business of performing services. X's members exchange property and services among themselves using credits on the books of X as a medium of exchange. Each exchange through X is reflected on the books of X by crediting the account of the member providing property or services and debiting the account of the member receiving such property or services. X also provides information to its members concerning property and services available for exchange through X. X charges its members a commission on each transaction in which credits on its books are used as a medium of exchange. X is a barter exchange within the meaning of paragraph (a)(4) of this section.

Example 5. A warehouse receipt is an interest in personal property for purposes of paragraph (a). Consequently, a warehouse receipt for a quantity of lead is a commodity under paragraph (a)(5)(ii). Similarly an executory contract that requires delivery of a warehouse receipt for a quantity of lead is a forward contract under paragraph (a)(7)(ii).

Example 6. The only customers of a depository trust acting as an escrow agent in corporate acquisitions which trust is a broker, are shareholders to whom the trust makes payments or shareholders for whom the trust is acting as an agent.

Example 7. The only customers of a stock transfer agent, which agent is a broker are shareholders to whom the agent makes payments or shareholders for whom the agent is acting as an agent,

Example 8. D, an individual not otherwise exempt from reporting, is the holder of an obligation issued by P, a corporation. R, a broker, acting as an agent for P, retires such obligation held by D. Such obligor payments from R represent obligor payments by P. (See paragraph (c)(3)(v)). D, the person to whom the gross proceeds are paid or credited by R, is the customer of R.

(c) *Reporting by brokers*—(1) *Requirement of reporting.* Any broker shall, except as otherwise provided, report in the manner prescribed in this section.

(2) *Sales required to be reported.* Except as provided in paragraphs (c)(3), (c)(5), (g), and (p)(1), a broker shall make a return of information with respect to each sale by a customer of the broker effected by the broker in the ordinary course of a trade or business in which the broker stands ready to effect sales to be made by others.

(3) *Exceptions*—(i) *In general.* Except as provided in paragraph (c)(3)(ii) of this section, the exceptions set forth in paragraph (c)(3) of § 5f.6045–1 of this chapter apply to sales effected on or after May 29, 1984. For an exception for certain sales of agricultural commodities and certificates issued by the Commodity Credit Corporation after January 1, 1993, see paragraph (c)(7) of this section. With respect to sales effected before May 29, 1984, the exceptions provided in § 1.6045–1(c)(3) (as contained in the CFR edition revised as of April 1, 1984) apply.

(ii) *Excepted sales.* No return of information is required with respect to a sale effected by a broker for a customer if the sale is an excepted sale. For this purpose, a sale is an excepted sale if it is so designated by the Internal Revenue Service in a revenue ruling or revenue procedure published in the Internal Revenue Bulletin. (See § 601.601(d)(2)(ii)(*b*) of this chapter).

(4) *Examples.* The examples set forth in paragraph (c)(4) of § 5f.6045–1 illustrate the application of the exceptions to sales effected on or after May 29, 1984. With respect to sales effected before May 29, 1984, the examples provided in 26 CFR 1.6045–1(c)(4) (revised as of April 1, 1983) illustrate the application of the exceptions.

(5) *Form of reporting for regulated futures contracts*—(i) *In general.* A broker effecting closing transactions in regulated futures contracts shall report information with respect to regulated futures contracts solely in the manner prescribed in this paragraph (c)(5). In the case of a sale that involves making delivery pursuant to a regulated futures contract, only the profit or loss on the contract is reported as a transaction with respect to regulated futures contracts under this paragraph (c)(5); such sales are, however, subject to reporting under paragraph (d)(2). The information required under this paragraph (c)(5) must be reported on a calendar year basis, unless the broker

is advised in writing by an account's owner that the owner's taxable year is other than a calendar year and the broker elects to report with respect to regulated futures contracts in such account on the basis of the owner's taxable year. The following information must be reported as required by Form 1099 with respect to regulated futures contracts held in a customer's account:

(A) The name, address, and taxpayer identification number of the customer.

(B) The net realized profit or loss from all regulated futures contracts closed during the calendar year.

(C) The net unrealized profit or loss in all open regulated futures contracts at the end of the preceding calendar year.

(D) The net unrealized profit or loss in all open regulated futures contracts at the end of the calendar year.

(E) The aggregate profit or loss from regulated futures contracts $((b)+(d)-(c))$.

(F) Any other information required by Form 1099. See 17 CFR 1.33. For this purpose, the end of a year is the close of business of the last business day of such year. In reporting under this paragraph (c)(5), the broker shall make such adjustments for commissions that have actually been paid and for option premiums as are consistent with the books of the broker. No additional returns of information with respect to regulated futures contracts so reported are required.

(ii) *Determination of profit or loss from foreign currency contracts.* A broker effecting a closing transaction in foreign currency contracts (as defined in section 1256(g)) shall report information with respect to such contracts in the manner prescribed in paragraph (c)(5)(i) of this section. If a foreign currency contract is closed by making or taking delivery, the net realized profit or loss for purposes of paragraph (c)(5)(i)(B) of this section is determined by comparing the contract price to the spot price for the contract currency at the time and place specified in the contract. If a foreign currency contract is closed by entry into an offsetting contract, the net realized profit or loss for purposes of paragraph (c)(5)(i)(B) of this section is determined by comparing the contract price to the price of the offsetting contract. The net unrealized profit or loss in a foreign currency contract for purposes of paragraphs (c)(5)(i) (C) and (D) of this section is determined by comparing the contract price to the broker's price for similar contracts at the close of business of the relevant year.

(iii) *Examples.* The following examples illustrate the application of the rules in this paragraph (c)(5):

Example 1. On October 30, 1984, A, an individual who is a calendar year taxpayer not otherwise exempt from reporting, buys one March 1985 put on Treasury Bond futures (i.e. A purchases an option to enter into a short regulated futures contract of $100,000 face value U.S. Treasury bonds). A pays $500 for the option. On December 19, 1984, A, through B, exercises the option and enters into the futures contract. On February 15, 1985, A, through B, enters into a closing transaction with respect to the futures contract. These are A's only transactions in the account. Since B's books list A's regulated futures contract on December 31, 1984, B must report for A, for 1984, the unrealized profit or loss in the contract as of December 31, 1984. For 1985, B will report the same amount for A as the unrealized profit or loss at the beginning of 1985. The return of information for 1985 will also include the gain or loss from the contract in the net realized profit or loss from all regulated futures contracts sales during 1985.

Example 2. The facts are the same as in Example (1) except that A does not enter into the closing transaction, but instead, on March 20, 1985, B informs A that A will make delivery under the contract. On March 22, 1985, A does so; consequently, A becomes entitled to the gross proceeds. B enters the closing transaction on its books on March 20, 1985. In addition to the returns of information required by paragraph (c)(5), as described in Example (1), B must report the March 22, 1985 delivery as a separate transaction. B may use as the sale date for the delivery either March 20, 1985, the date the transaction is entered on the books of B, or March 22, 1985, the date A becomes entitled to the gross proceeds. B may not deduct the $500 premium from the gross proceeds with respect to the March 22, 1985 delivery.

Example 3. The facts are the same as in Example (2) except that A buys a call on Treasury bond futures and takes delivery. B will supply the returns of information required by paragraph (c)(5), as described in Example (1). B is not required to make a return of information with respect to A's taking delivery.

Example 4. C, an individual who is a calendar year taxpayer not otherwise exempt from reporting, has an account with D, a

broker. C trades both regulated futures contracts and forward contracts through C's account with D. D must report C's regulated futures contracts on an annual basis as required by paragraph (c)(5). With respect to C's forward contracts, D may elect to use the calendar month, quarter, or year as D's reporting period as provided in paragraph (c)(6).

(6) *Reporting periods and filing groups*—(i) *Reporting period*—(A) *In general.* A broker may elect to use the calendar month, quarter, or year as the broker's reporting period. A broker may separately elect a reporting period for each filing group.

(B) *Election.* For each calendar year, a broker shall elect a reporting period by filing Forms 1096 and 1099 in the manner elected. A different reporting period may be subsequently elected by filing in the manner subsequently elected, provided no duplication of reported transactions results.

(ii) *Filing group*—(A) *In general.* A broker may elect to group customers or customer accounts by office, branch, department or other method of operational classification and separately file Forms 1096 and 1099 for each filing group.

(B) *Election.* For each calendar year, a broker shall elect filing groups by filing Forms 1096 and 1099 in the manner elected. Different filing groups may be subsequently elected by filing in the manner subsequently elected, provided no duplication of reported transactions results.

(iii) *Example.* The following example illustrates the rules of this paragraph (c)(6):

Example. The A department of C, a broker, files a separate report for each month of 1984, whereas the B department of C files one report for all of 1984. C makes no other reports or returns of information under section 6045 for 1984. C had thereby elected two filing groups for 1984, the A department and the B department. The A department has the calendar month as its 1984 reporting period, whereas the B department has the calendar year as its 1984 reporting period. The same result would occur if A and B were offices or branches of C.

(7) *Exception for certain sales of agricultural commodities and commodity certificates*—(i) *Agricultural commodities.* No return of information is required under section 6045 for a spot or forward sale of an agricultural commodity. This paragraph (c)(7)(i) does not except from reporting sales of agricultural commodities pursuant to regulated futures contracts, sales of derivative interests in agricultural commodities, or sales described in paragraph (c)(7)(iii) of this section.

(ii) *Commodity Credit Corporation certificates.* Except as otherwise provided in a revenue ruling or revenue procedure, no return of information is required under section 6045 with respect to a sale of a commodity certificate issued by the Commodity Credit Corporation under 7 CFR 1470.4 (1990).

(iii) *Sales involving designated warehouses.* Paragraph (c)(7)(i) of this section does not apply to any sale involving a warehouse receipt for an agricultural commodity issued by a designated warehouse for an agricultural commodity of the type for which the warehouse is a designated warehouse.

(iv) *Definitions.* For purposes of this paragraph (c)(7):

(A) *Agricultural commodity.* An ''agricultural commodity'' includes, but is not limited to, a commodity within the meaning of paragraph (a)(5) of this section that is a grain, feed, livestock, meat, oil seed, timber, or fiber.

(B) *Spot sale.* A spot sale is a sale that results in the substantially contemporaneous delivery of a commodity.

(C) *Forward sale.* A forward sale is a sale pursuant to a forward contract within the meaning of paragraph (a)(7) of this section.

(D) *Designated warehouse.* A designated warehouse is a warehouse, depository, or other similar entity, designated by a commodity exchange under 7 CFR 1.43 (1992), in which or out of which a particular type of agricultural commodity is deliverable in satisfaction of a regulated futures contract.

(v) *Effective dates.* Paragraph (c)(7) of this section applies to sales effected on or after January 1, 1993. For sales effected before January 1, 1993, the following transactions are excepted from the information reporting requirements of section 6045:

(A) Spot or forward sales of agricultural products or commodities (but not sales of interests in agricultural products or commodities, such as sales of

regulated futures contracts or forward contracts), effected by any person regardless of whether that person takes title to the agricultural products or commodities; and

(B) Sales of negotiable commodity certificates issued by the Commodity Credit Corporation.

(d) *Information required*—(1) *In general*. A broker that is required to make a return of information under paragraph (c) during a reporting period shall report on a separate Form 1096 for each filing group, showing such information as may be required by Form 1096, in the form, manner, and number of copies required by Form 1096.

(2) *Transactional reporting*. As to each sale with respect to which a broker is required to make a return of information under this section, the broker, except as provided in paragraphs (c)(5) and (p)(1), shall show on Form 1099 the name, address, and taxpayer identification number of the customer, the property sold, Committee on Uniform Security Identification Procedures (CUSIP) number of the security sold (if known), the gross proceeds, sale date, and such other information as may be required by Form 1099, in the form, manner, and number of copies required by Form 1099.

(3) *Bond sales between interest payment dates*. As to each sale of a debt obligation prior to maturity with respect to which a broker is required to make a return of information under this section, a broker shall show separately on Form 1099 the amount of accrued and unpaid interest as of the sale date that must be reported by the customer as interest income under §1.61–7(d) (but not the amount of any original issue or market discount). Such interest information shall be shown in the manner and at the time required by Form 1099 and section 6049.

(4) *Sale date*. With respect to sales of property that are reportable under this section, a broker must report a sale as occurring on the date the sale is entered on the books of the broker.

(5) *Gross proceeds*. The gross proceeds on a sale are the total amount paid to the customer or credited to the customer's account as a result of such sale reduced by the amount of any interest reported under paragraph (d)(3) and increased by any amount not so paid or credited by reason of repayment of margin loans. In the case of a closing transaction which results in a loss, gross proceeds are the amount debited from the customer's account. The broker may, but is not required to, take commissions and option premiums into account in determining gross proceeds, provided the treatment chosen is consistent with the books of the broker.

(6) *Conversion into United States dollars of proceeds paid in foreign currency*—(i) *Conversion rules*. When a payment is made in a foreign currency, the U.S. dollar amount shall be determined by converting such foreign currency into U.S. dollars on the date of payment at the spot rate (as defined in §1.988–1(d)(1)) or pursuant to a reasonable spot rate convention. For example, a withholding agent may use a month-end spot rate or a monthly average spot rate. A spot rate convention must be used consistently with respect to all non-dollar amounts withheld and from year to year. Such convention cannot be changed without the consent of the Commissioner or his or her delegate.

(ii) *Effect of identification under §1.988–5(a), (b), or (c) where the taxpayer effects a sale and a hedge through the same broker*—(A) *In general*. In lieu of the amount reportable under paragraph (d)(6)(i) of this section, the amount subject to reporting shall be the integrated amount computed under §1.988–5(a), (b) or (c) if—

(*1*) A taxpayer effects through a broker a sale or exchange of nonfunctional currency (as defined in §1.988–1(c)) and hedges all or a part of such sale as provided in §1.988–5(a), (b) or (c) with the same broker; and

(*2*) The taxpayer complies with the requirements of §1.988–5(a), (b) or (c) and so notifies the broker prior to the end of the calendar year in which the sale occurs.

(B) *Effective date*. The provisions of this paragraph (d)(6)(ii) apply to transactions entered into after December 31, 2000.

(e) *Reporting of barter exchanges*—(1) *Requirement of reporting*. A barter exchange shall, except as otherwise provided, report in the manner prescribed in this section.

(2) *Exchanges required to be reported*—(i) *In general.* Except as provided in paragraphs (e)(2)(ii), (g), and (p)(2), a barter exchange shall make a return of information with respect to exchanges of personal property or services through the barter exchange during the calendar year among its members or clients or between such persons and the barter exchange. For this purpose, property or services are exchanged through a barter exchange if payment for property or services is made by means of a credit on the books of the barter exchange or scrip issued by the barter exchange or if the barter exchange arranges a direct exchange of property or services among its members or clients or exchanges property or services with a member or client.

(ii) *Exemption.* A barter exchange through which there are fewer than 100 exchanges during the calendar year is not required to report for, or make a return of information with respect to exchanges during, such calendar year. The Commissioner may require multiple barter exchanges to be combined for purposes of the proceeding sentence upon a determination that a material purpose for the formation or continuation of one or more of the barter exchanges to be combined was to receive one or more exemptions pursuant to this subparagraph.

(f) *Information required*—(1) *In general.* A person that is a barter exchange during a calendar year shall report on Form 1096 showing the information required thereon for such year.

(2) *Transactional reporting*—(i) *In general.* As to each exchange with respect to which a barter exchange is required to make a return of information under this section, the barter exchange, except as provided in paragraph (p)(2), shall show on Form 1099 the name, address, and taxpayer identification number of each member or client providing property or services in the exchange, the property or services provided, the amount received by the member or client for such property or services, the date on which the exchange occurred, and such other information as may be required by Form 1099, in the form, manner, and number of copies required by Form 1099.

(ii) *Exception for corporate member or client.* As to each corporate member or client providing property or services in an exchange for which a return of information is required under this section, the barter exchange may report the name, address, and taxpayer identification number of the corporate member or client, the aggregate amount received by the corporate member or client during the reporting period for property or services provided by such corporate member or client in exchange for which a return of information is required, and such other information as may be required by Form 1099, in the form, manner, and number of copies required by Form 1099.

(iii) *Definition.* For purposes of paragraph (f)(2)(ii) of this section, the term ''corporate member or client'' means a member or client of a barter exchange which is a corporation as defined in section 7701(a)(3) (including an insurance company). The term corporation includes a pool, syndicate, partnership, or unincorporated association composed exclusively of corporations. A barter exchange may treat a member or client as a corporation (and therefore as a corporate member or client) if such member or client provides an exemption certificate as described in § 31.3406(h)–3(a) of this chapter or provided that—

(A) The name of the member or client contains the term ''insurance company,'' ''indemnity company,'' ''reinsurance company,'' or ''assurance company'';

(B) The name of the member or client contains one of the following unambiguous expressions of corporate status: Incorporated, Inc., Corporation, Corp., or P.C., but not Company or Co.; or

(C) The member or client is known to the barter exchange to be a corporation through a corporate resolution or similar document on file with the barter exchange clearly indicating corporate status.

(3) *Exchange date.* For purposes of this section an exchange is considered to occur with respect to a member or client of a barter exchange on the date cash, property, a credit, or scrip is actually or constructively received by the member or client as a result of the

exchange. (See §1.451–2 for rules pertaining to constructive receipt.)

(4) *Amount received*. The amount received by a member or client in an exchange includes cash received, the fair market value of any property or services received, and the fair market value of any credits to the account of the member or client on the books of the barter exchange or scrip issued to the member or client by the barter exchange, but does not include any amount received by the member or client in a subsequent exchange of credits or scrip. For purposes of this section, the fair market value of a credit or scrip is the value assigned to such credit or scrip by the issuing barter exchange for the purpose of exchanges unless the Commissioner requires the use of a different value that the Commissioner determines more accurately reflects fair market value.

(5) *Meaning of terms*. For purposes of this paragraph (f)—(i) A credit is an amount on the books of the barter exchange that is transferable from one member or client of the barter exchange to another such member or client, or to the barter exchange in payment for property or services;

(ii) Scrip is a token issued by the barter exchange that is transferable from one member or client, of the barter exchange to another such member or client, or to the barter exchange, in payment for property or services; and

(iii) Property does not include a credit or scrip.

(6) *Reporting period*. A barter exchange shall use the calendar year as the reporting period.

(g) *Exempt foreign persons*—(1) *Brokers*. No return of information is required to be made by a broker with respect to a customer who is considered to be an exempt foreign person under this paragraph (g)(1). A broker may treat a customer as an exempt foreign person under the circumstances described in paragraphs (g)(1)(i) through (iii) of this section.

(i) With respect to a sale effected at an office of a broker either inside or outside the United States, the broker may treat the customer as an exempt foreign person if the broker can, prior to the payment, associate the payment with documentation upon which it can rely in order to treat the customer as a foreign beneficial owner in accordance with §1.1441–1(e)(1)(ii), or as made to a foreign payee in accordance with §1.6049–5(d)(1) or presumed to be made to a foreign payee under §1.6049–5(d)(2) or (3). For purposes of this paragraph (g)(1)(i), the provisions in §1.6049–5(c) (regarding rules applicable to documentation of foreign status and definition of U.S. payor, U.S. middleman, non-U.S. payor, and non-U.S. middleman) shall apply. The provisions of §1.1441–1 shall apply by substituting the terms *broker* and *customer* for the terms *withholding agent* and *payee* and without regard for the fact that the provisions apply to amounts subject to withholding under chapter 3 of the Internal Revenue Code (Code). The provisions of §1.6049–5(d) shall apply by substituting the terms *broker* and *customer* for the terms *payor* and *payee*. For purposes of this paragraph (g)(1)(i), a broker that is required to obtain, or chooses to obtain, a beneficial owner withholding certificate described in §1.1441–1(e)(2)(i) from an individual may rely on the withholding certificate only to the extent the certificate includes a certification that the beneficial owner has not been, and at the time the certificate is furnished, reasonably expects not to be present in the United States for a period aggregating 183 days or more during each calendar year to which the certificate pertains. The certification is not required if a broker receives documentary evidence under §1.6049–5(c)(1) or (4).

(ii) With respect to a redemption or retirement of stock or an obligation (the interest or original issue discount on, which is described in §1.6049–5(b)(6), (7), (10), or (11) or the dividends on, which are described in §1.6042–3(b)(1)(iv)) that is effected at an office of a broker outside the United States by the issuer (or its paying or transfer agent), the broker may treat the customer as an exempt foreign person if the broker is not also acting in its capacity as a custodian, nominee, or other agent of the payee.

(iii) With respect to a sale effected by a broker at an office of the broker either inside or outside the United

States, the broker may treat the customer as an exempt foreign person for the period that those proceeds are assets blocked, as described in §1.1441–2(e)(3). For purposes of this paragraph (g)(1)(iii) and section 3406, a sale is deemed to occur in accordance with paragraph (d)(4) of this section. The exemption in this paragraph (g)(1)(iii) shall terminate when payment of the proceeds is deemed to occur in accordance with the provisions of §1.1441–2(e)(3).

(2) *Barter exchange*. No return of information is required by a barter exchange with respect to a client or a member that the barter exchange may treat as a foreign person pursuant to the procedures described in paragraph (g)(1) of this section.

(3) *Applicable rules*—(i) *Joint owners*. Amounts paid to joint owners for which a certificate or documentation is required as a condition for being exempt from reporting under paragraph (g) (1)(i) or (2) of this section are presumed made to U.S. payees who are not exempt recipients if, prior to payment, the broker or barter exchange cannot reliably associate the payment either with a Form W–9 furnished by one of the joint owners in the manner required in §§31.3406(d)–1 through 31.3406(d)–5 of this chapter, or with documentation described in paragraph (g)(1)(i) of this section furnished by each joint owner upon which it can rely to treat each joint owner as a foreign payee or foreign beneficial owner. For purposes of applying this paragraph (g)(3)(i), the grace period described in §1.6049–5(d)(2)(ii) shall apply only if each payee qualifies for such grace period.

(ii) *Special rules for determining who the customer is*. For purposes of this paragraph (g), the determination of who the customer is shall be made on the basis of the provisions in §1.6049–5(d) by substituting in that section the terms *payor* and *payee* with the terms *broker* and *customer*.

(iii) *Place of effecting sale*—(A) *Sale outside the United States*. For purposes of this paragraph (g), a sale is considered to be effected by a broker at an office outside the United States if, in accordance with instructions directly transmitted to such office from outside the United States by the broker's customer, the office completes the acts necessary to effect the sale outside the United States. The acts necessary to effect the sale may be considered to have been completed outside the United States without regard to whether—

(*1*) Pursuant to instructions from an office of the broker outside the United States, an office of the same broker within the United States undertakes one or more steps of the sale in the United States; or

(*2*) The gross proceeds of the sale are paid by a draft drawn on a United States bank account or by a wire or other electronic transfer from a United States account.

(B) *Sale inside the United States*. For purposes of this paragraph (g), a sale that is considered to be effected by a broker at an office outside the United States under paragraph (g)(3)(iii)(A) of this section shall nevertheless be considered to be effected by a broker at an office inside the United States if either—

(*1*) The customer has opened an account with a United States office of that broker;

(*2*) The customer has transmitted instructions concerning this and other sales to the foreign office of the broker from within the United States by mail, telephone, electronic transmission or otherwise (unless the transmissions from the United States have taken place in isolated and infrequent circumstances);

(*3*) The gross proceeds of the sale are paid to the customer by a transfer of funds into an account (other than an international account as defined in §1.6049–5(e)(4)) maintained by the customer in the United States or mailed to the customer at an address in the United States;

(*4*) The confirmation of the sale is mailed to a customer at an address in the United States; or

(*5*) An office of the same broker within the United States negotiates the sale with the customer or receives instructions with respect to the sale from the customer.

(iv) *Special rules where the customer is a foreign intermediary or certain U.S.*

branches. A foreign intermediary, as defined in §1.1441–1(c)(13), is an exempt foreign person, except when the broker has actual knowledge (within the meaning of §1.6049–5(c)(3)) that the person for whom the intermediary acts is a U.S. person that is not exempt from reporting under §5f.6045–1(c)(3) of this chapter or the broker is required to presume under §1.6049–5(d)(3) that the payee is a U.S. person that is not an exempt recipient. If an intermediary, as defined in §1.1441–1(c)(13), or a U.S. branch described in §1.1441–1(b)(2)(iv) (other than a U.S. branch that is treated as a U.S. person) receives a payment from a payor or middleman, which payment the payor or middleman can associate with a valid withholding certificate described in §1.1441–1(e)(3)(ii), (iii), or (v) furnished by such intermediary or U.S. branch, then the intermediary or U.S. branch is not required to report such payment when it, in turn, pays the amount to the person whose name is on the certificate furnished by the intermediary or U.S. branch to the payor or middleman, unless, and to the extent, the intermediary or U.S. branch knows that the payment is required to be reported under this section and was not so reported. For example, if a foreign intermediary or U.S. branch fails to provide information regarding U.S. persons that are not exempt from reporting under §5f.6045–1(c)(3) of this chapter to the person from whom the intermediary or U.S. branch receives the payment, the foreign intermediary or U.S. branch must report the payment on an information return. The exception of this paragraph (g)(3)(iv) shall not apply to a qualified intermediary that assumes reporting responsibility under chapter 61 of the Internal Revenue Code.

(4) *Examples*. The application of the provisions of this paragraph (g) may be illustrated by the following examples:

Example 1. FC is a foreign corporation that is not a U.S. payor or U.S. middleman described in §1.6049–5(c)(5) that regularly issues and retires its own debt obligations. A is an individual whose residence address is inside the United States, who holds a bond issued by FC that is in registered form (within the meaning of section 163(f) and the regulations under that section). The bond is retired by FP, a foreign corporation that is a broker within the meaning of paragraph (a)(1) of this section and the designated paying agent of FC. FP mails the proceeds to A at A's U.S. address. The sale would be considered to be effected at an office outside the United States under paragraph (g)(3)(iii)(A) of this section except that the proceeds of the sale are mailed to a U.S. address. For that reason, the sale is considered to be effected at an office of the broker inside the United States under paragraph (g)(3)(iii)(B) of this section. Therefore, FC is a broker under paragraph (a)(1) of this section with respect to this transaction because, although it is not a U.S. payor or U.S. middleman, as described in §1.6049–5(c)(5), it is deemed to effect the sale in the United States. FP is a broker for the same reasons. However, under the multiple broker exception under §5f.6045–1(c)(3)(ii) of this chapter, FP, rather than FC, is required to report the payment because FP is responsible for paying the holder the proceeds from the retired obligations. Under paragraph (g)(1)(i) of this section, FP may not treat A as an exempt foreign person and must make an information return under section 6045 with respect to the retirement of the FC bond, unless FP obtains the certificate or documentation described in paragraph (g)(1)(i) of this section.

Example 2. The facts are the same as in *Example 1* except that FP mails the proceeds to A at an address outside the United States. Under paragraph (g)(3)(iii)(A) of this section, the sale is considered to be effected at an office of the broker outside the United States. Therefore, under paragraph (a)(1) of this section, neither FC nor FP is a broker with respect to the retirement of the FC bond. Accordingly, neither is required to make an information return under section 6045.

Example 3. The facts are the same as in *Example 2* except that FP is also the agent of A. The result is the same as in *Example 2*. Neither FP nor FC are brokers under paragraph (a)(1) of this section with respect to the sale since the sale is effected outside the United States and neither of them are U.S. payors (within the meaning of §1.6049–5(c)(5)).

Example 4. The facts are the same as in *Example 1* except that the registered bond held by A was issued by DC, a domestic corporation that regularly issues and retires its own debt obligations. Also, FP mails the proceeds to A at an address outside the United States. Interest on the bond is not described in paragraph (g)(1)(ii) of this section. The sale is considered to be effected at an office outside the United States under paragraph (g)(3)(iii)(A) of this section. DC is a broker under paragraph (a)(1)(i)(B) of this section. DC is not required to report the payment under the multiple broker exception under §5f.6045–1(c)(3)(ii) of this chapter. FP is not required to make an information return under section 6045 because FP is not a U.S. payor described in §1.6049–5(c)(5) and the sale

is effected outside the United States. Accordingly, FP is not a broker under paragraph (a)(1) of this section.

Example 5. The facts are the same as in *Example 4* except that FP is also the agent of A. DC is a broker under paragraph (a)(1) of this section. DC is not required to report under the multiple broker exception under §5f.6045–1(c)(3)(ii) of this chapter. FP is not required to make an information return under section 6045 because FP is not a U.S. payor described in §1.6049–5(c)(5) and the sale is effected outside the United States and therefore FP is not a broker under paragraph (a)(1) of this section.

Example 6. The facts are the same as in *Example 4* except that the bond is retired by DP, a broker within the meaning of paragraph (a)(1) of this section and the designated paying agent of DC. DP is a U.S. payor under §1.6049–5(c)(5). DC is not required to report under the multiple broker exception under §5f.6045–1(c)(3)(ii) of this chapter. DP is required to make an information return under section 6045 because it is the person responsible for paying the proceeds from the retired obligations unless DP obtains the certificate or documentary evidence described in paragraph (g)(1)(i) of this section.

Example 7. Customer A, an individual, owns U.S. corporate bonds issued in registered form after July 18, 1984 and carrying a stated rate of interest. The bonds are held through an account with foreign bank, X, and are held in street name. X is a wholly-owned subsidiary of a U.S. company and is not a qualified intermediary within the meaning of §1.1441–1(e)(5)(ii). X has no documentation regarding A. A instructs X to sell the bonds. In order to effect the sale, X acts through its agent in the United States, Y. Y sells the bonds and remits the sales proceeds to X. X credits A's account in the foreign country. X does not provide documentation to Y.

(i) *Y's obligations to withhold and report.* Y treats X as the customer, and not A, because Y cannot treat X as an intermediary because it has received no documentation from X. Y is not required to report the sales proceeds under the multiple broker exception under §5f.6045–1(c)(3)(ii) of this chapter, because X is an exempt recipient. Further, Y is not required to report the amount of accrued interest paid to X on Form 1042–S under §1.1461–1(c)(2)(ii) because accrued interest is not an amount subject to reporting unless the withholding agent knows that the obligation is being sold with a primary purpose of avoiding tax.

(ii) *X's obligations to withhold and report.* Although X has effected, within the meaning of paragraph (a)(1) of this section, the sale of a security at an office outside the United States under paragraph (g)(3)(iii) of this section, X is treated as a broker, under paragraph (a)(1) of this section, because as a wholly-owned subsidiary of a U.S. corporation, X is a U.S. payor. See §1.6049–5(c)(5). Under the presumptions described in §1.6049–5(d)(2), X must presume that, with respect to the sales proceeds, A is a U.S. person who is not an exempt recipient. Therefore the payment of sales proceeds to A by X is reportable on a Form 1099 under paragraph (c)(2) of this section. X has no obligation to backup withhold on the payment based on the exemption under §31.3406(g)–1(e) of this chapter, unless X has actual knowledge that A is a U.S. person that is not an exempt recipient. X is also required to separately report the accrued interest (see paragraph (d)(3) of this section) on Form 1099 under section 6049 because A is also presumed to be a U.S. person who is not an exempt recipient under the presumption rule in §1.6049–5(d)(2) and §1.1441–1(b)(3)(iii) since accrued interest is not an amount subject to reporting and therefore the presumption of foreign status for offshore accounts under §1.1441–1(b)(3)(iii)(D) does not apply.

Example 8. The facts are the same as in *Example 7,* except that instead of U.S. corporate bonds that carry stated interest, A owns original issue discount instruments described in section 871(g)(1)(B)(i) (i.e., obligations payable 183 days or less from the date of original issue). In addition, the sale is in a transaction other than a redemption.

(i) *Y's obligations to withhold and report.* Y is not required to report the sales proceeds under the multiple broker exception under §5f.6045–1(c)(3)(ii) of this chapter, because X is an exempt recipient.

(ii) *X's obligations to withhold and report.* Although X has effected, within the meaning of paragraph (a)(1) of this section, the sale of a security at an office outside the United States under paragraph (g)(3)(iii) of this section, X is treated as a broker, under paragraph (a)(1) of this section, because as a wholly-owned subsidiary of a U.S. corporation, X is a U.S. payor. See §1.6049–5(c)(5). Under the presumptions described in §1.6049–5(d)(2), X must presume that, with respect to the sales proceeds, A is a U.S. person who is not an exempt recipient. Therefore the payment of sales proceeds to A by X is reportable on a Form 1099 under paragraph (c)(2) of this section. X has no obligation to backup withhold on the payment based on the exemption under §31.3406(g)–1(e) of this chapter, unless X has actual knowledge that A is a U.S. person that is not an exempt recipient. X is not required to separately report the amount of accrued original issue discount. See paragraph (d)(3) of this section.

Example 9. The facts are the same as in *Example 8,* except that X is a foreign corporation that is not a U.S. payor under §1.6049–5(c).

(i) *Y's obligations to withhold and report.* Y is not required to report the sales proceeds under the multiple broker exception under

§ 5f.6045–1(c)(3)(ii) of this chapter, because X is the person responsible for paying the proceeds from the sale to A.

(ii) *X's obligations to withhold and report.* Although A is presumed to be a U.S. payee under the presumptions of § 1.6049–5(d)(2), X is not considered to be a broker under paragraph (a)(1) of this section because it is a not a U.S. payor under § 1.6049–5(c)(5). Therefore X is not required to report the sale under paragraph (c)(2) of this section.

(i) *Y's obligations to withhold and report.* Y is not required to report the sales proceeds under the multiple broker exception under § 5f.6045–1(c)(3)(ii), because X is the person responsible for paying the proceeds from the sale to A. However, the portion of the payment that represents interest accrued on the obligation since the last payment date and that is received as part of the total sales proceeds from the transaction is reportable under § 1.1461–1 (b) and (c)(2)(i)(E), as an amount paid to a foreign person that is subject to withholding under chapter 3 of the Code within the meaning of § 1.1441–2(a) (even though no withholding is required under chapter 3 of the Code based on § 1.1441–3(b)(2)(i), unless § 1.1441–3(b)(2)(ii) applies). The multiple broker exception under the regulations under section 6045 does not affect a withholding agent's obligation to report an amount otherwise required to be reported under § 1.1461–1 (b) and (c). Under § 1.1461–1(c)(3), Y must file Form 1042–S in the name of X who, under § 1.1441–1(b)(3)(v)(A), is presumed to be acting for its own account because Y cannot associate the payment of interest with a valid intermediary Form W–8 described in § 1.1441–1(e)(3) (ii) or (iii) from X.

(ii) *X's obligations to withhold and report.* X may also have reporting and withholding obligations when it credits A's account with the sales proceeds. Although the sale is considered to be effected at an office outside the United States under paragraph (g)(3)(iii)(A) of this section, X is a broker with respect to the sale because, as a wholly-owned subsidiary of a U.S. company, it meets the definition of a broker under paragraph (a)(1) of this section. Under the presumptions described in § 1.6049–5(d)(2), X, as a U.S. payor, must presume that, with respect to the sales proceeds, A is a U.S. person who is not an exempt recipient. Therefore, the payment of sales proceeds to A by X is reportable on a Form 1099 under paragraph (c)(2) of this section. X has no obligation to backup withhold on the payment, based on the exemption under § 31.3406(g)–1(e), unless X has actual knowledge that A is a U.S. person who is not an exempt recipient. X is also a withholding agent with respect to the portion of the sales proceeds that represents accrued interest on the bonds. Based on the presumptions under §§ 1.6049–5(d)(2) and 1.1441–1(b)(3)(iii)(D), X must presume that A is a foreign person with respect to the interest portion of the payment, because the interest amount is an amount subject to withholding, within the meaning of § 1.1441–2(a) (even though a withholding agent is not required to withhold on such amounts). Thus, X is required to file a Form 1042 and 1042–S with respect to the interest portion of the payment. Y's filing of a Form 1042–S with respect to that portion of the payment to X does not meet the conditions for the multiple withholding agent exception under § 1.1461–1(c)(4)(i) because Y did not report the payment to X as a payment to an intermediary.

(5) *Effective date*—(i) *General rule.* The provisions of this paragraph (g) apply to payments made after December 31, 2000.

(ii) *Transition rules.* The validity of a withholding certificate (namely, Form W–8 or other form upon which the payor is permitted to rely to hold the payee as a foreign person) that was valid on January 1, 1998, under the regulations in effect prior to January 1, 2001 (see 26 CFR parts 1 and 35a, revised April 1, 1999) and expired, or will expire, at any time during 1998, is extended until December 31, 1998. The validity of a withholding certificate that is valid on or after January 1, 1999, remains valid until its validity expires under the regulations in effect prior to January 1, 2001 (see 26 CFR parts 1 and 35a, revised April 1, 1999) but in no event shall such a withholding certificate remain valid after December 31, 2000. The rule in this paragraph (g)(5)(ii), however, does not apply to extend the validity period of a form that expires in 1998 solely by reason of changes in the circumstances of the person whose name is on the certificate. Notwithstanding the first three sentences of this paragraph (g)(5)(ii), a payor may choose not to take advantage of the transition rule in this paragraph (g)(5)(ii) with respect to one or more withholding certificates valid under the regulations in effect prior to January 1, 2001 (see 26 CFR parts 1 and 35a, revised April 1, 1999) and, therefore, to require withholding certificates conforming to the requirements described in this section (new withholding certificates). For purposes of this section, a new withholding certificate is deemed to satisfy the documentation requirement under the regulations in effect prior to January 1,

2001 (see 26 CFR parts 1 and 35a, revised April 1, 1999). Further, a new withholding certificate remains valid for the period specified in §1.1441–1(e)(4)(ii), regardless of when the certificate is obtained.

(h) *Identity of customer*—(1) *In general.* For purposes of this section, a broker or barter exchange shall treat the person who appears on the books and records of the broker or barter exchange with respect to property or services as the principals with respect thereto.

(2) *Examples.* The following examples illustrate the rule of this paragraph (h):

Example 1. The records of A, a broker, show an account in the name of ''B''. B is a nominee for C. All reporting with respect to such account shall treat B as the customer.

Example 2. J, an individual, places an order with H, a broker, to sell J's stock that is held by P, a broker/dealer, in an account for J with P designated as nominee for J, and to credit the gross proceeds from the sale to J's account with P. The account is in the name of P, so that H's customer is P.

(i) [Reserved]

(j) *Time and place for filing; cross-reference to penalty.* Forms 1096 and 1099 required under this section shall be filed after the last calendar day of the reporting period elected by the broker or barter exchange and on or before February 28 of the following calendar year with the appropriate Internal Revenue Service Center, the address of which is listed in the instructions for Form 1096. See paragraph (l) of this section for the requirement to file certain returns on magnetic media. For provisions relating to the penalty provided for the failure to file timely a correct information return under section 6045(a), see §301.6721–1 of this chapter. See §301.6724–1 of this chapter for the waiver of a penalty if the failure is due to reasonable cause and is not due to willful neglect.

(k) *Requirement and time for furnishing statement; cross-reference to penalty*—(1) *General requirements.* A broker or barter exchange making a return of information under this section with respect to a transaction shall furnish to the person whose identifying number is (or is required to be) shown on such return a written statement showing the information required by paragraph (c)(5), (d), (f), or (p) of this section and containing a legend stating that such information is being reported to the Internal Revenue Service. If the return of information is not made on magnetic media, this requirement may be satisfied by furnishing to such person a copy of all Forms 1099 with respect to such person filed with the Internal Revenue Service Center. A statement shall be considered to be furnished to a person to whom a statement is required to be made under this paragraph (k) if it is mailed to such person at the last address of such person known to the broker or barter exchange.

(2) *Time for furnishing statements.* A broker or barter exchange may furnish the statements required by this paragraph (k) yearly, quarterly, monthly, or on any other basis, without regard to the reporting period elected by the broker or barter exchange, provided that all statements required to be furnished under this paragraph (k) for a calendar year shall be furnished on or before January 31 of the following calendar year.

(3) *Cross-reference to penalty.* For provisions for failure to furnish timely a correct payee statement, see §301.6724–1 of this chapter (Procedure and Administration Regulations). See §301.6724–1 of this chapter for the waiver of a penalty if the failure is due to reasonable cause and is not due to willful neglect.

(l) *Use of magnetic media.* For information returns filed after December 31, 1996, see §301.6011–2 of this chapter for rules relating to filing information returns on magnetic media and for rules relating to waivers granted for undue hardship. A broker or barter exchange that fails to file a Form 1099 on magnetic media, when required, may be subject to a penalty under section 6721 for each such failure. See paragraph (j) of this section.

(m) *Reporting on options transactions.* [Reserved]

(n) *Reporting on bond discounts.* [Reserved]

(o) *Additional reporting by stock transfer agents.* [Reserved]

(p) *Transitional rules*—(1) *Information required from brokers.* In the case of reporting periods ending before January

1, 1984, a broker may show the information required by this paragraph (p)(1) on Form 1099 in lieu of the information required under paragraph (d)(2). As to each customer account for which a return of information is required under this section with respect to sales, the broker must report the name, address, and taxpayer identification number of the customer, the aggregate gross proceeds of all sales of the account during the reporting period for which a return of information is required under this section, and such other information as may be required by Form 1099, in the form, manner, and number of copies required by Form 1099.

(2) *Information required from barter exchanges*. In the case of reporting periods ending before January 1, 1984, a barter exchange may show the information required by this paragraph (p)(2) on Form 1099 in lieu of the information required under paragraph (f)(2). As to each member or client providing property or services in an exchange for which a return of information is required under this section, the barter exchange must report the name, address, and taxpayer identification number of the member or client, the aggregate amount received by the member or client during the reporting period for property or services provided by such member or client in exchanges for which a return of information is required, and such other information as may be required by Form 1099, in the form, manner, and number of copies required by Form 1099.

(q) *Effective date*. This section applies to calendar year 1983 and all succeeding calendar years, and, as to 1983, only to transactions occurring on or after July 1, 1983. With regard to paragraph (l) of this section, see section 6011(e) of the Internal Revenue Code for information returns required to be filed after December 31, 1989, and before January 1, 1997; and see paragraph (l) of this section for information returns required to be filed after December 31, 1996.

(r) *Electronic filing*. Notwithstanding the time prescribed for filing in paragraph (j) of this section, Forms 1096 and 1099 required under this section for reporting periods ending during a calendar year shall, if filed electronically, be filed after the last calendar day of the reporting period elected by the broker or barter exchange and on or before March 31 of the following calendar year.

[T.D. 7873, 48 FR 10304, Mar. 11, 1983, as amended by T.D. 7932, 48 FR 57485, Dec. 30, 1983; 49 FR 2469, Jan. 20, 1984; T.D. 7960, 49 FR 22283, May 29, 1984; T.D. 8445, 57 FR 53032, Nov. 6, 1992; T.D. 8452, 57 FR 58984, Dec. 14, 1992; T.D. 8683, 61 FR 53060, Oct. 10, 1996; T.D. 8734, 62 FR 53476, Oct. 14, 1997; T.D. 8445, 63 FR 12410, Mar. 13, 1998; T.D. 8770, 63 FR 35519, June 30, 1998; T.D. 8804, 63 FR 72186, 72188, Dec. 31, 1998; T.D. 8856, 64 FR 73411, 73412, Dec. 30, 1999; T.D. 8881, 65 FR 32206, 32212, May 22, 2000; T.D. 8895, 65 FR 50407, Aug. 18, 2000; 66 FR 18189, Apr. 6, 2001]

§ 1.6045–1T Returns of information of brokers and barter exchanges (temporary).

(a)–(k) [Reserved]

For further guidance, see § 1.6045–1 (a) through (k).

(l) *Use of magnetic media*. For information returns filed after December 31, 1996, see § 301.6011–2T of this chapter for rules relating to filing information returns on magnetic media and for rules relating to waivers granted for undue hardship. For information returns filed prior to January 1, 1997, see § 1.6045–1(l)

[T.D. 8683, 61 FR 53060, Oct. 10, 1996]

§ 1.6045–2 Furnishing statement required with respect to certain substitute payments.

(a) *Requirement of furnishing statements*—(1) *In general*. Any broker (as defined in paragraph (a)(4)(ii) of this section) that transfers securities (as defined in § 1.6045–1(a)(3)) of a customer (as defined in paragraph (a)(4)(iii) of this section) for use in a short sale and receives on behalf of the customer a substitute payment (as defined in paragraph (a)(4)(i)) shall, except as otherwise provided, furnish a statement to the customer identifying such payment as being a substitute payment.

(2) *Special rule for transfers for broker's own use*. Any broker that borrows securities of a customer for use in a short sale entered into for the broker's own account shall be deemed to have transferred the stock to itself and received on behalf of the customer any substitute payment made with respect to the transferred securities, and shall be required to furnish a statement with

respect to such payments in accordance with paragraph (a)(1) of this section.

(3) *Special rule for furnishing statements to individual customers with respect to payments in lieu of dividends*—(i) *In general*. Except as otherwise provided, a broker that receives a substitute payment in lieu of a dividend on behalf of a customer who is an individual (''individual customer'') need not furnish a statement to the customer.

(ii) *Exception for certain dividends*. Any broker that receives on behalf of an individual customer a substitute payment in lieu of—

(A) An exempt-interest dividend (as defined in paragraph (a)(4)(vii) of this section);

(B) A capital gain dividend (as defined in paragraph (a)(4)(vi) of this section);

(C) A distribution treated as a return of capital under section 301(c)(2) or (c)(3); or

(D) An FTC dividend (as defined in paragraph (a)(4)(viii) of this section) shall furnish a statement to the individual customer identifying the payment as being a substitute payment as prescribed by this section, provided that the broker has reason to know not later than the record date of the dividend payment that the payment is a substitute payment in lieu of an exempt-interest dividend, a capital gain dividend, a distribution treated as a return of capital, or an FTC dividend.

(4) *Meaning of terms*. The following definitions apply for purposes of this section.

(i) The term *substitute payment* means a payment in lieu of—

(A) Tax-exempt interest, to the extent that interest has accrued on the obligation for the period during which the short sale is open;

(B) A dividend, the ex-dividend date for which occurs during the period after the transfer of stock for use in a short sale, and prior to the closing of the short sale; or

(C) Any other item specified in a rule-related notice published in the FEDERAL REGISTER (provided that such items shall be subject to the rules of this section only subsequent to the time of such publication).

For purposes of this section original issue discount accruing on an obligation (the interest upon which is exempt from tax under section 103) for the period during which the short sale is open shall be deemed a payment in lieu of tax-exempt interest.

(ii) The term *broker* means both a person described in § 1.6045–1(a)(1) and a person that, in the ordinary course of a trade or business during the calendar year, loans securities owned by others.

(iii) The term *customer* means, with respect to a transfer of securities for use in a short sale, the person that is the record owner of the securities so transferred.

(iv) The term *dividend* means a dividend (as defined in section 316) or a distribution that is treated as a return of capital under section 301(c)(2) or (c)(3).

(v) The term *tax-exempt interest* means interest to which the exception in section 6049 (b)(2)(B) applies.

(vi) The term *capital gain dividend* means a capital gain dividend as defined in section 852(b)(3)(C) or section 857(b)(3)(C).

(vii) The term *exempt-interest dividend* means an exempt-interest dividend as defined in section 852(b)(5)(A).

(viii) The term *FTC dividend* means a dividend with respect to which the recipient is entitled to claim a foreign tax credit under section 901 (but not by virtue of taxes deemed paid under section 902 or 960).

(5) *Examples*. The following examples illustrate the definition of a substitute payment in lieu of tax-exempt interest found in paragraph (a)(4)(i)(A) of this section.

Example (1). On September 1, 1984, L, a broker, borrows 200 State Q Bonds (the interest upon which is exempt from tax under section 103) held in street name for customer R and transfers the bonds to W for use in a short sale. The bonds each have a face value of $100 and bear 12% stated annual interest paid semiannually on January 1 and July 1 of each year. The bonds were not issued with original issue discount. On November 1, 1984, W closes the short sale and returns State Q Bonds to L. On January 1, 1985, L receives a $1200 interest payment (6%×$100×200 bonds =$1200) from State Q with respect to R's bonds. Four hundred dollars (2 months the bonds were on loan/6 months in the interest period =⅓×$1200=$400) of the interest payment represents accrued interest on the obligations for the period during which the short

sale was open and is a substitute payment in lieu of tax-exempt interest within the meaning of paragraph (a)(4)(i)(A) of this section. L must furnish a statement under paragraph (a) of this section to R for calendar year 1985 with respect to the $400 substitute payment.

Example (2). Assume the same facts as in Example (1), except that W closes the short sale on February 1, 1985. On January 1, 1985, L receives a $1200 payment from W with respect to R's bonds. Eight hundred dollars (4 months the bonds were on loan prior to January 1, 1985/6 months in the interest period =⅔×$1200=$800) of the payment represents accrued interest on the obligation for the period during which the short sale was open and is a substitute payment in lieu of tax-exempt interest. On July 1, 1985, L receives a $1200 payment from State Q. Two hundred dollars (1 month the bonds were on loan after December 31, 1984/6 months in the interest period =⅙×$1200=$200) of the payment represents accrued interest on the obligation for the period during which the short sale was open and is a substitute payment in lieu of the tax-exempt interest. Because both payments are received by L in 1985, L must furnish a statement under paragraph (a) of this section to R for that year with respect to both payments.

(b) *Exceptions*—(1) *Minimal payments.* No statement is required to be furnished under section 6045(d) or this section to any customer if the aggregate amount of the substitute payments received by a broker on behalf of the customer during a calendar year for which a statement must be furnished is less than $10.

(2) *Exempt recipients*—(i) *In general.* A statement shall not be required to be furnished with respect to substitute payments made to a broker on behalf of—

(A) An organization exempt from taxation under section 501(a);

(B) An individual retirement plan;

(C) The United States, a possession of the United States, or an instrumentality or a political subdivision or a wholly-owned agency of the foregoing;

(D) A State, the District of Columbia, or a political subdivision or a wholly-owned agency or instrumentality of either of the foregoing;

(E) A foreign government or a political subdivision thereof;

(F) An international organization; or

(G) A foreign central bank of issue, as defined in §1.6049–4(c)(1)(ii)(H), or the Bank for International Settlements.

(ii) *Determination of whether a person is described in paragraph (b)(2)(i) of this section.* The determination of whether a person is described in paragraph (b)(2)(i) of this section shall be made in the manner provided in §5f.6045–1(c)(3)(i)(B) of the Temporary Income Tax Regulations under the Tax Equity and Fiscal Responsibility Act of 1982.

(3) *Exempt foreign persons.* A statement shall not be required to be furnished with respect to substitute payments made to a broker on behalf of a person that is an exempt foreign person as described in §1.6045–1(g)

(c) *Form of statement.* A broker shall furnish the statement required by paragraph (a) of this section on Form 1099. The statement must show the aggregate dollar amount of all substitute payments received by the broker on behalf of a customer (for which the broker is required to furnish a statement) during a calendar year, and such other information as may be required by Form 1099. A statement shall be considered to be furnished to a customer if it is mailed to the customer at the last address of the customer known to the broker.

(d) *Time for furnishing statements.* A broker must furnish the statements required by paragraph (a) of this section for each calendar year. Such statements shall be furnished after April 30th of such calendar year but in no case before the final substitute payment for the calendar year is made, and on or before January 31 of the following calendar year.

(e) *When substitute payment deemed received.* A Broker is deemed to have received a substitute payment on behalf of a customer when the amount is paid or deemed paid to the broker (or as it accrues in the case of original issue discount deemed a payment in lieu of tax-exempt interest).

(f) *Identification of customer and recordkeeping with respect to substitute payments*—(1) *Payments in lieu of tax-exempt interest and exempt-interest dividends.* A broker that receives substitute payments in lieu of tax-exempt interest, exempt-interest dividends, or other items (to the extent specified in a rule-related notice published pursuant to paragraph (a)(4)(i)(C) of this section) on behalf of a customer and is required to

furnish a statement under paragraph (a) of this section must determine the identity of the customer whose security was transferred and on whose behalf the broker received such substitute payments by specific identification of the record owner of the security so transferred. A broker must keep adequate records of the determination so made.

(2) *Payments in lieu of dividends other than exempt-interest dividends*—(i) *Requirements and methods.* A broker that receives substitute payments in lieu of dividends, other than exempt-interest dividends, on behalf of a customer and is required to furnish a statement under paragraph (a) of this section must make a determination of the identity of the customer whose stock was transferred and on whose behalf such broker receives substitute payments. Such determination must be made as of the record date with respect to the dividend distribution, and must be made in a consistent manner by the broker in accordance with any of the following methods:

(A) Specific identification of the record owner of the transferred stock;

(B) The method of allocation and selection specified in paragraph (f)(2)(ii) of this section; or

(C) Any other method, with the prior approval of the Commissioner.

A broker must keep adequate records of the determination so made.

(ii) *Method of allocation and selection*—(A) *Allocation to borrowed shares and individual and nonindividual pools.* With respect to each substitute payment in lieu of a dividend received by a broker, the broker must allocate the transferred shares (*i.e.*, the shares giving rise to the substitute payment) among all shares of stock of the same class and issue as the transferred shares which were (*1*) borrowed by the broker, and (*2*) which the broker holds (or has transferred in a transaction described in paragraph (a)(1) of this section) and is authorized by its customers to transfer (including shares of stock of the same class and issue held for the broker's own account) (''loanable shares''). The broker may first allocate the transferred shares to any borrowed shares. Then to the extent that the number of transferred shares exceeds the number of borrowed shares (or if the broker does not allocate to the borrowed shares first), the broker must allocate the transferred shares between two pools, one consisting of the loanable shares of all individual customers (the ''individual pool'') and the other consisting of the loanable shares of all nonindividual customers (the ''nonindividual pool''). The transferred shares must be allocated to the individual pool in the same proportion that the number of loanable shares held by individual customers bears to the total number of loanable shares available to the broker. Similarly, the transferred shares must be allocated to the nonindividual pool in the same proportion that the number of loanable shares held by nonindividual customers bears to the total number of loanable shares available to the broker.

(B) *Selection of deemed transferred shares within the nonindividual pool.* The broker must select which shares within the nonindividual pool are deemed transferred for use in a short sale (the ''deemed transferred shares''). Selection of deemed transferred shares may be made either by purely random lottery or on a first-in-first-out (''FIFO'') basis.

(C) *Selection of deemed transferred shares within the individual pool.* The broker must select which shares within the individual pool are deemed transferred shares (in the manner described in the preceding paragraph) only with respect to substitute payments as to which a statement is required to be furnished under paragraph (a)(2)(ii) of this section.

(3) *Examples.* The following examples illustrate the identification of customer rules of paragraph (f)(2):

Example (1). A, a broker, holds X corporation common stock (of which there is only a single class) in street name for five customers: C, a corporation; D, a partnership; E, a corporation; F, an individual; and G, a corporation. C owns 100 shares of X stock, D owns 50 shares of X stock, E owns 100 shares of X stock, F owns 50 shares of X stock, and G owns 100 shares of X stock. A is authorized to loan all of the X stock of C, D, E, and F. G, however, has not authorized A to loan its X stocks. A does not hold any X stock in its trading account nor has A borrowed any X stock from another broker. A transfers 150 shares of X stock to H for use in a short sale on July 1, 1985. A dividend of $2 per share is

declared with respect to X stock on August 1, 1985, payable to the owners of record as of August 15, 1985 (the ''record'' date). A receives $2 per transferred share as a payment in lieu of a dividend with respect to X stock or a total of $300 on September 15, 1985. H closes the short sale and returns X stock to A on January 2, 1986. A's records specifically identify the owner of each loanable share of stock held in street name. From A's records it is determined that the shares transferred to H consisted of 100 shares owned by C, 25 shares owned by D, and 25 shares owned by F. The substitute payment in lieu of dividends with respect to X stock is therefore attributed to C, D and F based on the actual number of their shares that were transferred to H. Accordingly, C receives $200 (100 shares × $2 per share), and D and F each receive $50 (25 shares each × $2 per share). A must furnish statements identifying the payments as being in lieu of dividends to both C and D, unless they are exempt recipients as defined in paragraph (b)(2) of this section or exempt foreign persons as defined in paragraph (b)(3) of this section. Assuming that A had no reason to know on the record date of the payment that the dividend paid by X is of a type described in paragraphs (a)(3)(ii)(A) through (D) of this section, A need not furnish F with a statement under section 6045(d) because F is an individual. (However, A may be required to furnish F with a statement in accordance with section 6042 and the regulations thereunder. See paragraph (h) of this section.) By recording the ownership of each share transferred to H, A has complied with the identification requirement of paragraph (f)(2) of this section.

Example (2). Assume the same facts as in example (1), except that A's records do not specifically identify the record owner of each share of stock. Rather, all shares of X stock held in street name are pooled together. When A receives the $2 per share payment in lieu of a dividend, A determines the identity of the customers to which the payment relates by the method of allocation and selection prescribed in paragraph (f)(2)(ii) of this section. First, the transferred shares are allocated proportionately between the individual pool and the nonindividual pool. One-sixth of the transferred shares or 25 shares are allocated to the individual pool (50 loanable shares owned by individuals/300 total loanable shares-⅙; ⅙×150 transferred shares=25 shares). Assuming A has no reason to know by the record date of the payment that the payment is in lieu of a dividend of a type described in paragraphs (a)(3)(ii)(A) through (D) of this section, no selection of deemed transferred shares within the individual customer pool is required. (However, A may be required to furnish F with a statement under section 6042 and the regulations thereunder. See paragraph (h) of this section.) Five-sixths of the transferred shares or 125 shares are allocated to the nonindividual pool (250 loanable shares owned by nonindividuals/300 total loanable shares=⅚; ⅚×150 transferred shares=125 shares). A must select which 125 shares within the nonindividual pool are deemed to have been transferred. Using a purely random lottery, A selects 100 shares identified as being owned by C, and 25 shares identified as being owned by D. Accordingly, A is deemed to have transferred 100 shares and 25 shares owned by C and D respectively, and received substitute payments in lieu of dividends of $200 (100 shares × $2 per share) and $50 (25 shares × $2 per share) on behalf of C and D respectively. A must furnish statements to both C and D identifying such payments as being in lieu of dividends unless they are exempt recipients as defined in paragraph (b) (2) of this section or exempt foreign persons as defined in paragraph (b) (3) of this section. A has complied with the identification requirement of paragraph (f)(2) of this section.

(g) *Reporting by brokers*—(1) *Requirement of reporting.* Any broker required to furnish a statement under paragraph (a) of this section shall report on Form 1096 showing such information as may be required by Form 1096, in the form, manner, and number of copies required by Form 1096. With respect to each customer for which a broker is required to furnish a statement, the broker shall make a return of information on Form 1099, in the form, manner and number of copies required by Form 1099.

(2) *Use of magnetic media.* For information returns filed after December 31, 1996, see § 301.6011–2 of this chapter for rules relating to filing information returns on magnetic media and for rules relating to waivers granted for undue hardship. A broker or barter exchange that fails to file a Form 1099 on magnetic media, when required, may be subject to a penalty under section 6721 for each such failure. See paragraph (g)(4) of this section.

(3) *Time and place of filing.* The returns required under this paragraph (g) for any calendar year shall be filed after September 30 of such year, but not before the final substitute payment for the year is received by the broker, and on or before February 28 (March 31 if filed electronically) of the following year with any of the Internal Revenue Service Centers, the addresses of which are listed in the instructions for Form 1096.

(4) *Cross-reference to penalties.* For provisions relating to the penalty provided for failure to file timely a correct information return required under section 6045(d) and §1.6045–2(g)(1), including a failure to file on magnetic media, see §301.6721–1 of this chapter. For provisions relating to the penalty provided for failure to furnish timely a correct payee statement required under section 6045(d) and §1.6045–2(a), see §301.6722–1 of this chapter. See §301.6724–1 of this chapter for the waiver of a penalty if the failure is due to reasonable cause and is not due to willful neglect.

(h) *Coordination with section 6042.* In cases in which reporting is required by both sections 6042 and 6045(d) with respect to the same substitute payment in lieu of a dividend, the provisions of section 6045(d) control, and no report or statement under section 6042 need be made. If reporting is not required under section 6045(d) with respect to a substitute payment in lieu of a dividend, a report under section 6042 must be made if required in accordance with the rules of section 6042 and the regulations thereunder. Thus, if a broker receives a substitute payment in lieu of a dividend on behalf of an individual customer and the broker does not have reason to know by the record date of the payment that the payment is in lieu of a dividend of a type described in paragraphs (a)(3)(ii)(A) through (D) of this section, the broker must report with respect to the substitute payment if required in accordance with section 6042 and the regulations thereunder.

(i) *Effective date.* These regulations apply to substitute payments received by a broker after December 31, 1984. With regard to paragraph (g)(2) of this section, see section 6011(e) of the Internal Revenue Code for information returns required to be filed after December 31, 1989, and before January 1, 1997; and see paragraph (g)(2) of this section for information returns required to be filed after December 31, 1996.

[T.D. 8029, 50 FR 23677, June 5, 1985, as amended by T.D. 8683, 61 FR 53060, Oct. 10, 1996; T.D. 8734, 62 FR 53480, Oct. 14, 1997; T.D. 8770, 63 FR 35519, June 30, 1998; T.D. 8895, 65 FR 50407, Aug. 18, 2000]

1.6045–2T Furnishing statement required with respect to certain substitute payments (temporary).

(a)–(g)(1) [Reserved]

For further guidance, see §1.6045–2 (a) through (g)(1).

(g)(2) *Use of magnetic media.* For information returns filed after December 31, 1996, see §301.6011–2T of this chapter for rules relating to filing information returns on magnetic media and for rules relating to waivers granted for undue hardship. For information returns filed prior to January 1, 1997, see §1.6045–2(g)(2).

[T.D. 8683, 62 FR 53060, Oct. 10, 1996]

§1.6045–4 Information reporting on real estate transactions with dates of closing on or after January 1, 1991.

(a) *Requirement of reporting.* Except as otherwise provided in paragraphs (c) and (d) of this section, a real estate reporting person (''reporting person'') must make an information return with respect to a real estate transaction and, under paragraph (m) of this section, must furnish a statement to the transferor. A reporting person may also report with respect to transactions otherwise excepted in paragraphs (c) and (d) of this section. However, if the reporting person so elects, the return must be filed and the statement furnished in accordance with the provisions of this section. For the definition of a real estate transaction for purposes of these reporting requirements, see paragraph (b) of this section. For rules for determining the reporting person with respect to a real estate transaction, see paragraph (e) of this section.

(b) *Definition of real estate transaction*—(1) *In general.* A transaction is a ''real estate transaction'' under this section if the transaction consists in whole or in part of the sale or exchange of ''reportable real estate'' (as defined in paragraph (b)(2) of this section) for money, indebtedness, property other than money, or services. The term ''sale or exchange'' shall include any transaction properly treated as a sale or exchange for Federal income tax purposes, whether or not the transaction is currently taxable. Thus, for

example, a sale or exchange of a principal residence is a real estate transaction under this section even though the transferor is entitled to defer recognition under section 1034 (relating to rollover of gain on sale of principal residence), or the transferor is entitled to the special one-time exclusion of gain from the sale of a principal residence provided by section 121 to certain persons who have attained age 55.

(2) *Definition of reportable real estate.* Except as otherwise provided in paragraph (c)(2) of this section, the term ''reportable real estate'' means any present or future ownership interest in—

(i) Land (whether improved or unimproved), including air space;

(ii) Any inherently permanent structure, including any residential, commercial or industrial building;

(iii) Any condominium unit, including appurtenant fixtures and common elements (including land); or

(iv) Any stock in a cooperative housing corporation (as defined in section 216).

For purposes of this section, the term ''ownership interest'' includes fee simple interests, life estates, reversions, remainders, and perpetual easements. In addition, the term ''ownership interest'' includes any previously created rights to possession or use for all or a portion of any particular year (*i.e.*, a leasehold, easement, or ''timeshare''), with a remaining term of at least 30 years, including any period for which such rights may be renewed at the option of the holder of the rights, as determined on the date of closing (as defined in paragraph (h)(2)(ii) of this section). Thus, for example, a pre-existing leasehold on a building with an original term of 99 years is an ownership interest in real estate for purposes of this section if it has a remaining term of 35 years as of the date of closing, but not if it has a remaining term of only 10 years as of the date of closing. However, the term ''ownership interest'' does not include an option to acquire otherwise reportable real estate.

(c) *Exception for certain exempt transactions*—(1) *Certain transfers.* No return of information is required with respect to—

(i) A transaction that is not a sale or exchange (such as a gift (including a transaction treated as a gift under section 1041) or bequest, or a financing or refinancing that is not related to the acquisition of reportable real estate), even if the transaction involves reportable real estate, as defined in paragraph (b)(2) of this section;

(ii) A transfer in full or partial satisfaction of any indebtedness secured by the property so transferred including a foreclosure, a transfer in lieu of foreclosure or an abandonment; or

(iii) A transaction (a ''de minimis transfer'') in which it can be determined with certainty that the total consideration (in money, services and property), received or to be received in connection with the transaction is less than $600 in value (determined without regard to any allocation of gross proceeds among multiple transferors under paragraph (i)(5) of this section) as of the date of the closing (as defined in paragraph (h)(2)(ii) of this section), even if the transaction involves reportable real estate. Thus, for example, if a contract for sale of reportable real estate recites total consideration of ''$1.00 plus other valuable consideration,'' the transfer is not a de minimis transfer unless the reporting person can determine that the ''other valuable consideration'' received or to be received is less than $599 in value as measured on the date of closing.

(2) *Certain property.* Notwithstanding the provisions of paragraph (b)(2) of this section, no return of information is required with respect to a sale or exchange of an interest in any of the following property—provided the sale or exchange of such property is not related to the sale or exchange of reportable real estate—

(i) An interest in surface or subsurface natural resources (*i.e.*, timber, water, ores and other natural deposits) or crops, whether or not such natural resources or crops are severed from the land;

(ii) A burial plot or vault; or

(iii) A manufactured structure used as a dwelling that is manufactured and assembled at a location different from that where it is used, but only if such structure is not affixed, at the date of closing (as defined in paragraph

(h)(2)(ii) of this section), to a foundation. Thus, a transfer of an unaffixed mobile home that is unrelated to the sale or exchange of reportable real estate is excepted from the reporting requirements of this section.

(d) *Exception for certain exempt transferors*—(1) *General rule*. No return of information is required with respect to a transferor that is a corporation under section 7701(a)(3) or section 7704(a) or is considered under paragraph (d)(2) of this section to be—

(i) A corporation;

(ii) A governmental unit; or

(iii) An exempt volume transferor.

In the case of a real estate transaction with respect to which there is one or more exempt transferor(s) and one or more non-exempt transferor(s), the reporting person is required to report with respect to any non-exempt transferor. The special rule for allocation of gross proceeds, as provided in paragraph (i)(5) of this section, applies to such a transaction.

(2) *Treatment as exempt transferor*. Absent actual knowledge to the contrary, a reporting person may treat a transferor as—

(i) A corporation if—

(A) The name of the transferor contains an unambiguous expression of corporate status, such as Incorporated, Inc., Corporation, Corp., or P.C. (but not Company or Co.);

(B) The name of the transferor contains the term ''insurance company,'' ''reinsurance company,'' or ''assurance company''; or

(C) The transfer or loan documents clearly indicate the corporate status of the transferor;

(ii) A governmental unit if the transferor is—

(A) The United States or a state, the District of Columbia, a possession of the United States, a political subdivision of any of the foregoing, or any wholly owned agency or instrumentality of any one or more of the foregoing; or

(B) A foreign government, a political subdivision thereof, an international organization, as defined in section 7701(a)(18), or any wholly-owned agency or instrumentality of the foregoing; or

(iii) An exempt volume transferor if, and only if, the reporting person receives a certification of exempt status under paragraph (d)(3) of this section.

(3) *Certification of exempt status*—(i) *In general*. A certification of exempt status must contain—

(A) The name, address, and taxpayer identification number of the transferor (the address must be that of the permanent residence (in the case of an individual), that of the principal office (in the case of a corporation or partnership), or that of the permanent residence or principal office of any fiduciary (in the case of a trust or estate));

(B) Sufficient information to identify any otherwise reportable real estate not reported by virtue of the exempt status of the transferor; and

(C) A declaration that the transferor has sold or exchanged during either of the prior two calendar years, or previously sold or exchanged during the current calendar year, or, as of the date of closing (as defined in paragraph (h)(2)(ii) of this section), reasonably expects to sell or exchange during the current calendar year at least 25 separate items of reportable real estate (as defined in paragraph (b)(2) of this section) to at least 25 separate transferees, and that each such item, at the date of closing of the sale of such item was or will be held primarily for sale or resale to customers in the ordinary course of a trade or business. For example, the declaration may be worded as follows:

[Insert name of transferor]

[check one or more]:

(1) ____ has sold or exchanged during either of the prior two calendar years,

(2) ____ previously sold or exchanged during the current calendar year,

(3) ____ on the date of closing expects to sell or exchange during the current calendar year,

at least 25 separate items of reportable real estate to at least 25 separate transferees and each such item, at the date of closing of such item was or will be held primarily for sale or resale to customers in the ordinary course of a trade or business.

(ii) *Additional requirements*. A certification of exempt status must be—

(A) Signed under penalties of perjury by the transferor or any person who is authorized to sign a declaration under penalties of perjury in behalf of the

transferor as described in section 6061 and the regulations thereunder;

(B) Received by the reporting person no later than the time of closing; and

(C) Retained by the reporting person for four years following the close of the calendar year in which the date of closing (as determined under paragraph (h)(2)(ii) of this section) occurs.

(iii) *Reporting person may accept or disregard certification.* A reporting person may solicit or merely accept a certification of exempt status. Moreover, notwithstanding a transferor's furnishing of such certification, a reporting person may disregard the certification and, instead, report with respect to the transaction. See paragraph (a) of this section for the requirement that such elective reporting must be in compliance with the provisions of this section.

(e) *Person required to report*—(1) *In general.* Although there may be other persons involved in a real estate transaction, only the reporting person is required to report with respect to any real estate transaction. Except as provided in a designation agreement under paragraph (e)(5) of this section, the reporting person with respect to a real estate transaction is—

(i) The person responsible for closing the transaction, as defined in paragraph (e)(3) of this section; or

(ii) If there is no person responsible for closing the transaction, the person determined to be the reporting person under paragraph (e)(4) of this section.

A person may be the reporting person with respect to a transaction whether or not such person performs or is licensed to perform real estate brokerage services for a commission or fee.

(2) *Employees, agents, and partners.* For purposes of this paragraph (e), if an employee, agent, or partner (other than an employee, agent, or partner of the transferor or the transferee) acting within the scope of such person's employment, agency, or partnership participates in a real estate transaction—

(i) Such participation shall be attributed to such person's employer, principal, or partnership; and

(ii) Only the employer, principal, or partnership (and not such person) may be the reporting person with respect to such transaction as a result of such participation.

However, the participation of a person described in paragraph (e)(3)(i) of this section (*i.e.*, a person listed on the Uniform Settlement Statement as the settlement agent) acting as an agent of another is not attributed to the principal.

(3) *Person responsible for closing the transaction*—(i) *Uniform Settlement Statement used.* If a Uniform Settlement Statement prescribed under the Real Estate Settlement Procedures Act of 1974 (RESPA), 12 U.S.C. 2601 *et seq.* (a ''Uniform Settlement Statement''), is used with respect to the real estate transaction and a person is listed as settlement agent on the statement, such person is the person responsible for closing the transaction. For purposes of this section, a Uniform Settlement Statement shall include any amendments or variations thereto, or substitutions therefore that may hereafter be prescribed under RESPA, provided that any such amended, varied, or substituted form requires disclosure of the parties to the transaction, the application of the proceeds of the transaction, and the identity of the settlement agent or other person responsible for preparing the form.

(ii) *Other closing statement used.* If a Uniform Settlement Statement is not used, or if a Uniform Settlement Statement is used, but no person is listed as settlement agent, the person responsible for closing the transaction is the person who prepares a closing statement presented to the transferor and transferee at, or in connection with, the closing of the real estate transaction. For purposes of this section, a closing statement is any closing statement, settlement statement (including a Uniform Settlement Statement), or other written document that identifies the transferor and transferee, reasonably identifies the transferred real estate, and describes the manner in which the proceeds payable to the transferor are to be (or were) disbursed at, or in connection with, the closing.

(iii) *No closing statement used or multiple closing statements used.* If no closing statement is used or multiple closing statements are used, the person responsible for closing the transaction is

the first-listed of the persons that participate in the transaction as—

(A) The attorney for the transferee who is present at the occasion of the delivery of either the transferee's note or a significant portion of the cash proceeds to the transferor, or who prepares or reviews the preparation of the document(s) transferring legal or equitable ownership of the real estate;

(B) The attorney for the transferor who is present at the occasion of the delivery of either the transferee's note or a significant portion of the cash proceeds to the transferor, or who prepares or reviews the preparation of the document(s) transferring legal or equitable ownership of the real estate; or

(C) The disbursing title or escrow company that is most significant in terms of gross proceeds disbursed.

If more than one attorney would be the person responsible for closing the transaction under the preceding sentence, the person among such attorneys who is considered responsible for closing the transaction under this paragraph (e)(3)(iii) is the person whose involvement in the transaction is most significant.

(4) *Determination of the real estate reporting person in the absence of a person responsible for closing the transaction.* If no person is responsible for closing the transaction (within the meaning of paragraph (e)(3) of this section), the reporting person with respect to the real estate transaction is the person first-listed below of the persons that participate in the transaction as—

(i) The mortgage lender (as defined in paragraph (e)(6)(i) of this section);

(ii) The transferor's broker (as defined in paragraph (e)(6)(ii) of this section);

(iii) The transferee's broker (as defined in paragraph (e)(6)(iii) of this section); or

(iv) The transferee (as defined in paragraph (e)(6)(iv) of this section).

(5) *Designation agreement*—(i) *In general.* If a written designation agreement executed at or prior to the time of closing designates one of the persons described in paragraph (e)(5)(ii) of this section as the reporting person with respect to the transaction and the designated person is a party to the agreement, the designated person is the reporting person with respect to the transaction. It is not necessary that all parties to the transaction (or that more than one party) be parties to the agreement.

(ii) *Persons eligible.* A person may be designated as the reporting person under this paragraph (e)(5) only if the person is—

(A) The person responsible for closing the transaction (as defined in paragraph (e)(3) of this section);

(B) A person described in paragraph (e)(3)(iii) (A), (B) or (C) of this section (whether or not such person is responsible for closing the transaction); or

(C) The mortgage lender (as defined in paragraph (e)(6)(i) of this section).

(iii) *Form of designation agreement.* A designation agreement may be in any form that is consistent with the requirements of this paragraph (e)(5), and may be included on a closing statement with respect to the transaction. The designation agreement must, however, include the name and address of the transferor and transferee and the address and any additional information necessary to identify the real estate transferred. The agreement must identify, by name and address, the person designated as the reporting person with respect to the transaction, and all other parties (if any) to the agreement. All parties to the agreement must date and sign the agreement and must retain the agreement for four years following the close of the calendar year in which the date of closing (as determined under paragraph (h)(2)(ii) of this section) occurs. Upon request by the Internal Revenue Service, or any person involved in the transaction who did not participate in the designation agreement, the agreement must be made available for inspection.

(6) *Meaning of terms*—(i) *Mortgage lender.* For purposes of this paragraph (e), the term ''mortgage lender'' means the person who lends new funds in connection with the transaction, but only if the repayment of such funds is secured in whole or in part by the real estate transferred. If new funds are advanced by more than one person, the mortgage lender is the person who advances the largest amount of new funds. If two or more persons advance equal amounts of new funds and no

other person advances a greater amount of new funds, the mortgage lender among the persons advancing such equal amounts is the person with the security interest that is most senior in terms of priority. For purposes of this paragraph (e)(6)(i), any amounts advanced by the transferor are not treated as new funds.

(ii) *Transferor's broker*. For purposes of this paragraph (e), the term ''transferor's broker'' means only the broker that contracts with the transferor and is compensated in connection with the transaction.

(iii) *Transferee's broker*. For purposes of this paragraph (e), the term ''transferee's broker'' means only the broker that participates to a significant extent in the preparation of the transferee's offer to acquire the real estate or that presents such offer to the transferor. If more than one person is so described, the transferee's broker is the person whose participation in the preparation of the transferee's offer to acquire the real estate is most significant or, in the event there is no such person, the person whose participation in the presentation of the offer is most significant.

(iv) *Transferee*. For purposes of this paragraph (e), the term ''transferee'' means the person who acquires the greatest interest in the real estate. If there is no such person, the transferee is the person listed first on the document(s) transferring legal or equitable ownership of the real estate.

(f) *Multiple transferors*—(1) *General rule*. In the case of multiple transferors, each of which transfers an interest in the same reportable real estate, the reporting person shall make a separate information return with respect to each transferor. Paragraph (i)(5) of this section provides rules for the determination of gross proceeds to be reported in the case of multiple transferors.

(2) *Rules for spouses*. Transferors who are husband and wife at the time of closing and hold the reportable real estate as tenants in common, joint tenants, tenants by the entirety, or community property are treated as a single transferor for purposes of paragraphs (f)(1), (h)(1)(i), (i)(5) and (l)(1)(i) of this section, unless the reporting person receives, at or prior to the time of closing, an uncontested allocation of gross proceeds between them. In the case of a husband and wife treated as a single transferor, the reporting person may treat either as the transferor for purposes of paragraphs (h)(1)(i) and (l)(1) of this section, relating to reporting and soliciting taxpayer identification numbers.

(g) *Prescribed form*. Except as otherwise provided in paragraph (k) of this section, the information return required by paragraph (a) of this section shall be made on Form 1099.

(h) *Information required*—(1) *In general*. The following information must be set forth on the Form 1099 required by this section:

(i) The name, address, and taxpayer identification number (TIN) of the transferor (see also paragraph (f)(2) of this section);

(ii) A general description of the real estate transferred (in accordance with paragraph (h)(2)(i) of this section);

(iii) The date of closing (as defined in paragraph (h)(2)(ii) of this section);

(iv) To the extent required by the Form 1099 and its instructions, the entire gross proceeds with respect to the transaction (as determined under the rules of paragraph (i) of this section), and, in the case of multiple transferors, the gross proceeds allocated to the transferor (as determined under paragraph (i)(5) of this section);

(v) To the extent required by the Form 1099 and its instructions, an indication that the transferor—

(A) Received (or will, or may, receive) property (other than cash and consideration treated as cash in computing gross proceeds) or services as part of the consideration for the transaction,

(B) May receive property (other than cash) or services in satisfaction of an obligation having a stated principal amount, or

(C) May receive, in connection with a contingent payment transaction, an amount of gross proceeds that cannot be determined with certainty using the method described in paragraph (i)(3)(iii) of this section and is therefore not included in gross proceeds under paragraphs (i)(3)(i) and (i)(3)(iii) of this section;

(vi) The real estate reporting person's name, address, and TIN;

(vii) [Reserved]; and

(viii) Any other information required by the Form 1099 or its instructions.

(2) *Meaning of terms*—(i) *General description of the real estate transferred.* A general description of the real estate transferred includes the complete address of the property. If the address would not sufficiently identify the property, a general description of the real estate also includes a legal description (*e.g.*, section, lot, and block) of the property.

(ii) *Date of closing.* In the case of a real estate transaction with respect to which a Uniform Settlement Statement is used, the date of closing shall be the date (if any) properly described as the ''Settlement Date'' on such statement. In all other cases, the date of closing shall be the earlier of the date on which title is transferred or the date on which the economic burdens and benefits of ownership of the real estate shift from the transferor to the transferee.

(i) *Gross proceeds*—(1) *In general.* Except as otherwise provided in this paragraph (i), the term ''gross proceeds'' means the total cash received or to be received by or on behalf of the transferor in connection with the real estate transaction. For purposes of this paragraph (i), the following amounts are treated as cash received or to be received by or on behalf of the transferor in connection with the real estate transaction:

(i) The stated principal amount of any obligation to pay cash to or for the benefit of the transferor in the future (including any obligation having a stated principal amount that may be satisfied by the delivery of property (other than cash) or services);

(ii) The amount of any liability of the transferor assumed by the transferee as part of the consideration for the transfer or of any liability to which the real estate acquired is subject (whether or not the transferor is personally liable for the debt); and

(iii) In the case of a contingent payment transaction, as defined in paragraph (i)(3)(ii) of this section, the maximum determinable proceeds, as defined in paragraph (i)(3)(iii) of this section.

Gross proceeds does not include the value of any property (other than cash and consideration treated as cash) or services received by, or on behalf of, the transferor in connection with the real estate transaction. See paragraph (h)(1)(v) of this section for the information that must be included on the Form 1099 required by this section in cases in which the transferor receives (or will, or may, receive) property (other than cash and consideration treated as cash) or services as part of the consideration for the transfer.

(2) *Treatment of sales commissions and similar expenses.* In computing gross proceeds, the total cash received or to be received by or on behalf of the transferor shall not be reduced by expenses borne by the transferor (such as sales commissions, expenses of advertising the real estate, expenses of preparing the deed, and the cost of legal services in connection with the transfer).

(3) *Special rules for contingent payments*—(i) *In general.* If a real estate transaction is a contingent payment transaction, gross proceeds consist of the maximum determinable proceeds, if any.

(ii) *Contingent payment transaction.* For purposes of this section, the term ''contingent payment transaction'' means a real estate transaction with respect to which the receipt, by or on behalf of the transferor, of cash or consideration treated as cash under paragraph (i)(1)(i) of this section is subject to a contingency.

(iii) *Maximum determinable proceeds.* For purposes of this section, the term ''maximum determinable proceeds'' means the gross proceeds determined by assuming that all of the contingencies contemplated by the documents available at closing are met or otherwise resolved in a manner that will maximize the gross proceeds. If the maximum amount of gross proceeds cannot be determined with certainty using this method, the maximum determinable proceeds are the greatest amount that can be determined with certainty using this method. See paragraph (h)(1)(v)(C) of this section for the information that must

be included on the Form 1099 required by this section in cases in which the maximum amount of gross proceeds cannot, by using the method described in this paragraph (i)(3)(iii), be determined with certainty.

(4) *Uniform Settlement Statement used.* If a Uniform Settlement Statement is used with respect to a real estate transaction involving a transfer of reportable real estate solely for cash and consideration treated as cash in computing gross proceeds, the gross proceeds generally will be the same amount as the contract sales price properly shown on that statement.

(5) *Special rules for multiple transferors*—(i) *General rules.* In the case of multiple transferors (within the meaning of paragraph (f) of this section) each of which transfers an interest in the same reportable real estate, the reporting person must request the transferors to provide an allocation of the gross proceeds among the transferors. The request must be made at or before the time of closing. Neither the request nor the response is required to be in writing. The reporting person must make a reasonable effort to contact all transferors of whom the reporting person has actual knowledge. The reporting person may, however, rely on the unchallenged response of any transferor and need not make additional efforts to contact other transferors after at least one complete allocation (whether or not contained in a single response) is received. Except as otherwise provided in this paragraph (i)(5), the reporting person shall report the gross proceeds in accordance with any allocation received at or before the time of closing. The reporting person may (but is not required to) report the gross proceeds in accordance with any allocation received after the time of closing and before the date (determined without regard to extensions) the Forms 1099 are required to be filed. The reporting person may not report the gross proceeds in accordance with any allocation received on or after the date (determined without regard to extensions) the Forms 1099 are required to be filed. If no gross proceeds are allocated to a transferor because no allocation or an incomplete allocation is received by the reporting person, the reporting person shall report the entire unallocated gross proceeds (if any) on the return of information made with respect to such transferor. If the reporting person receives conflicting allocations from the transferors, the reporting person shall report the entire gross proceeds on each return of information made with respect to the transaction.

(ii) *Rules for spouses.* The reporting person need not request an allocation of gross proceeds if the only transferors are husband and wife at the time of closing. If there are other transferors, the reporting person need only make a reasonable effort to contact either the husband or wife in connection with the request for an allocation. See paragraph (f)(2) of this section for rules that treat a husband and wife as multiple transferors if an uncontested allocation of gross proceeds is received by the reporting person at or prior to the time of closing.

(6) *Multiple asset transactions.* In the case of a real estate transaction reportable under this section that involves the transfer of reportable real estate and other assets, the amount attributable to both the real estate and other assets is treated as the gross proceeds with respect to that real estate transaction. No allocation of gross proceeds is made among the assets.

(j) *Time and place for filing.* A reporting person shall file the information returns required by this section with respect to a real estate transaction after December 31 of the calendar year that includes the date of closing (as determined under paragraph (h)(2)(ii) of this section) and on or before February 28 (March 31 if filed electronically) of the following calendar year. The returns shall be filed with the appropriate Internal Revenue Service Center at the address listed in the Instructions to Form 1099.

(k) *Use of magnetic media and substitute forms*—(1) *Magnetic media*—(i) *General rule.* A reporting person that is required to make a return of information under this section shall, except as otherwise provided in paragraph (k)(1)(ii) or (iii) of this section, submit the information required by this section on magnetic media (within the meaning of 26 CFR 301.6011–2). Returns on magnetic media shall be made in accordance

with 26 CFR 301.6011–2) and applicable revenue procedures.

(ii) *Exception for low-volume filers.* For rules allowing a reporting person to make the information returns required by this section on the prescribed paper Form 1099 if the reporting person is required by this section to file fewer than 250 returns during the calendar year, see section 6011(e) and guidance issued by the Internal Revenue Service thereunder.

(iii) *Undue hardship.* The Commissioner may authorize a reporting person to file information returns on the prescribed paper Form 1099 instead of on magnetic media if undue hardship is shown either on Form 8508, Request for Waiver From Filing Information Returns on Magnetic Media, or on a written statement requesting a waiver for undue hardship filed with the Martinsburg Computing Center, Martinsburg, West Virginia in accordance with applicable revenue procedures.

(2) *Substitute forms.* A reporting person that is described in paragraph (k)(1)(ii) of this section or that receives permission to file returns on the prescribed paper Form 1099 under paragraph (k)(1)(iii) of this section may prepare and use a form that contains provisions identical with those of Form 1099 if the reporting person complies with all applicable revenue procedures relating to substitute Form 1099, including any requirement relating to the use of machine-readable paper forms.

(l) *Requesting taxpayer identification numbers (TINS)*—(1) *Solicitation*—(i) *General requirements.* A reporting person who is required to make an information return with respect to a real estate transaction under this section must solicit a TIN from the transferor at or before the time of closing. The solicitation may be made in person or in a mailing that includes other items. Any person whose TIN is solicited under this paragraph (l) must furnish such TIN to the reporting person and certify that the TIN is correct. See paragraph (f)(2) of this section for rules that treat a husband and wife as a single transferor (and provide for the TIN solicitation of either) in the absence of an allocation of gross proceeds under paragraph (i)(5) of this section.

(ii) *Content of solicitation.* The solicitation shall be made by providing to the person from whom the TIN is solicited a written statement that the person is required by law to furnish a correct TIN to the reporting person, and that the person may be subject to civil or criminal penalties for failing to furnish a correct TIN. For example, the solicitation may be worded as follows:

> You are required by law to provide [insert name of reporting person] with your correct taxpayer identification number. If you do not provide [insert name of reporting person] with your correct taxpayer identification number, you may be subject to civil or criminal penalties imposed by law.

The solicitation shall contain space for the name, address, and TIN of the person from whom the TIN is solicited and for the person to certify under penalties of perjury that the TIN furnished is that person's correct TIN. The wording of the certification must be substantially similar to the following: ''Under penalties of perjury, I certify that the number shown on this statement is my correct taxpayer identification number.'' The requirements of this paragraph (l)(1)(ii) may be met by providing to the transferor a copy of Form W–9. In the case of a real estate transaction for which a Uniform Settlement Statement is used, the requirements of this paragraph (l)(1)(ii) may be met by providing to the transferor a copy of such statement that is modified to conform to the requirements of this paragraph (l)(1)(ii).

(iii) *Retention requirement.* The solicitation shall be retained by the reporting person for four years following the close of the calendar year that includes the date of closing (as determined under paragraph (h)(2)(ii) of this section). Such solicitation must be made available for inspection upon request by the Internal Revenue Service.

(2) *No TIN provided.* A reporting person that does not receive the transferor's TIN will not be subject to any penalty cross-referenced in paragraph (n) of this section by reason of failure to report such TIN if the reporting person has complied with the requirements of paragraph (l)(1) of this section in good faith (determined with proper regard for a course of conduct and the overall results achieved for the year).

(m) *Furnishing statements to transferors*—(1) *Requirement of furnishing statements*. A reporting person who is required to make a return of information under paragraph (a) of this section shall furnish to the transferor whose TIN is required to be shown on the return a written statement of the information required to be shown on such return. The written statement must bear either the legend shown on the recipient copy of Form 1099 or the following:

This is important tax information and is being furnished to the Internal Revenue Service. If you are required to file a return, a negligence penalty or other sanction may be imposed on you if this item is required to be reported and the IRS determines that it has not been reported.

This requirement may be satisfied by furnishing to the transferor a copy of a completed Form 1099 (or substitute Form 1099 that complies with current revenue procedures). In the case of a real estate transaction for which a Uniform Settlement Statement is used, this requirement also may be satisfied by furnishing to the transferor a copy of a completed statement that is modified to comply with the requirements of this paragraph (m), and by designating on the Uniform Settlement Statement the items of information (such as gross proceeds or allocated gross proceeds) required to be set forth on the Form 1099. For purposes of this paragraph (m), a statement shall be considered furnished to a transferor if it is given to the transferor in person, either at the closing or thereafter, or is mailed to the transferor at the transferor's last known address.

(2) *Time for furnishing statement*. The statement required under this paragraph (m) shall be furnished to the transferor on or after the date of closing and before February 1 of the following calendar year.

(n) *Cross-reference to penalties*. See the following sections regarding penalties for failure to comply with the requirements of section 6045(e) and this section:

(1) Section 6721 for failure to file a correct information return;

(2) Section 6722 for failure to furnish a correct statement to the transferor;

(3) Section 6723 for failure to comply with other information reporting requirements (including the requirement to furnish a TIN);

(4) Section 6724 for definitions and rules relating to waiver and payment; and

(5) Section 7203 for willful failure to supply information (including a taxpayer identification number).

(o) *No separate charge*. A reporting person may not separately charge any person involved in a real estate transaction for complying with any requirements of this section.

(p) *Backup withholding requirements*. [Reserved.]

(q) *Federally-subsidized indebtedness*. [Reserved].

(r) *Examples*. The following examples illustrate the application of this section:

Example 1 Sale or exchange. (i) On June 1, 1991, A, an individual, buys a house from B, an individual, for $200,000. The entire $200,000 is financed by B under an ''installment land contract,'' whereby A takes possession and assumes all significant economic benefits and burdens of ownership of the house, and B retains legal title to the property until A fully performs under the contract. On June 1, 1994, A refinances his purchase of the house with Z, a financial institution. The balance owed to B is repaid and B relinquishes title to the house. A retains possession and the benefits and burdens of ownership of the house.

(ii) For federal income tax purposes, the transaction occurring on June 1, 1991 is considered a sale of the house by B, notwithstanding his retention of legal title to the property. B's sale is subject to information reporting under this section. However, the transaction occurring on June 1, 1994 is not a sale or exchange for federal income tax purposes, and notwithstanding the change in legal title upon the deeding over of the property, that transaction is not subject to information reporting under this section.

Example 2 Sale or exchange. On August 10, 1991, C, an individual, accepts an offer from Y, a corporation that acts on behalf of T (C's employer) to facilitate moves of T's transferred employees from one part of the country to another. Under the offer, C transfers his residence to Y for $250,000 by executing a deed to the property in blank and giving Y a power of attorney to dispose of the residence. C also immediately vacates the residence, whereupon Y begins paying all costs associated with the residence and is entitled to all income from the residence, including sales proceeds. On October 1, 1991, Y sells the residence to D and inserts C's name in the deed

previously executed by C. Thus, neither Y nor T ever become record owners of the residence. C's transfer of the residence to Y on August 10, 1991 is a sale of reportable real estate and is subject to information reporting under this section; however, the sale on October 1, 1991 is not required to be reported because Y (the transferor in that sale) is a corporation. See paragraph (d) of this section.

Example 3 Definition of ownership interest. E, an individual, owns a perpetual timeshare interest in a residential unit of real property at an oceanfront resort. For consideration, on November 15, 1991, E sells her rights in the property for the period January 1, 1992 through December 31, 1992 to F. The transfer of E's property interest is not the transfer of an ownership interest, as defined in paragraph (b)(2) of this section and therefore is not reportable real estate under paragraph (b)(2) of this section. Accordingly, the transfer is not a real estate transaction under section (b)(1) of this section, and no return of information is required with respect to E's property transfer.

Example 4 Gross proceeds (exchange). (i) G, an individual, agrees to transfer Blackacre, which has a fair market value of $100,000, plus $10,000 cash to H, an individual, in exchange for Whiteacre, which as a fair market value of $120,000 and is encumbered by a $10,000 liability (which is assumed by G). No other liabilities are involved in the transaction. P is the reporting person with respect to both sides of the transaction.

(ii) With respect to the transfer of Blackacre by G to H, P must report gross proceeds of $–0– (even though the exchange agreement may recite total exchange value of $120,000). See paragraph (i)(1) of this section. In addition, (to the extent required by the Form 1099 and its instructions) P must indicate that G will receive property as part of the consideration for the transaction. See paragraph (h)(v)(A) of this section.

(iii) With respect to the transfer of Whiteacre by H to G, P must report gross proceeds of $20,000 (the amount received by H consisting of cash ($10,000) and consideration treated as cash ($10,000) under paragraph (i) of this section). No other amount is reported under paragraph (i)(1) of this section even though the exchange agreement may recite total exchange value of $120,000. In addition, (to the extent required by the Form 1099 and its instructions) P must indicate that H will receive property as part of the consideration for the transaction. See paragraph (h)(v)(A) of this section.

Example 5 Gross proceeds (deferred exchange). [Reserved]

Example 6 Gross proceeds (contingencies). K, an individual, sells an unencumbered apartment building to L for $500,000, payable at closing, plus an amount equal to 2% of gross rents from the apartment building for each of the next 5 years, the contingent payments to be made annually with adequate stated interest. The agreement provides that the maximum amount K may receive (including the downpayment but excluding the interest) is $600,000. Under paragraph (i)(3)(ii) of this section the real estate transaction is a ''contingent payment transaction.'' Under paragraph (i)(3)(iii) of this section, the maximum amount of gross proceeds determined by assuming all contingencies are satisfied is $600,000. Thus, $600,000 is the ''maximum determinable proceeds'' and is the amount reported.

Example 7 Gross proceeds (contingencies). The facts are the same as in example (6), except that the agreement does not provide for adequate stated interest. The result is the same as in example (6).

Example 8 Gross proceeds (contingencies). The facts are same as in example (6), except that no maximum amount is stated in the agreement (or any other document available at closing). Under paragraph (i)(3)(iii) of this section, assuming all contingencies are satisfied, the maximum amount of gross proceeds cannot be determined with certainty. The greatest amount that can be determined with certainty at the time of the closing, assuming all contingencies are satisfied, is $500,000, the cash downpayment. Therefore, $500,000 is the ''maximum determinable proceeds'' under paragraph (i)(3)(iii) of this section and is the amount reported. In addition, (to the extent required by the Form 1099 and its instructions) the reporting person must indicate that the gross proceeds cannot be determined with certainty. See paragraph (h)(1)(iv)(C) of this section.

Example 9 Gross proceeds (contingencies). The facts are the same as in example (8), except that the agreement provides that the minimum amount K will receive (including the downpayment) is $570,000. Thus, under paragraph (i)(3)(iii) of this section, assuming all contingencies are satisfied, the maximum amount of gross proceeds cannot be determined with certainty. The greatest amount that can be determined with certainty at the time of the closing, assuming all contingencies are satisfied, is $570,000, the minimum amount stated in the agreement. Therefore, $570,000 is the ''maximum determinable proceeds'' under paragraph (i)(3)(iii) of this section and is the amount reported. In addition, (to the extent required by the Form 1099 and its instructions) the reporting person must indicate that the gross proceeds cannot be determined with certainty. See paragraph (h)(1)(iv)(C) of this section.

(s) *Effective date.* This section is effective for real estate transactions with dates of closing (as determined under

paragraph (h)(2)(ii) of this section) that occur on or after January 1, 1991.

[T.D. 8323, 55 FR 51284, Dec. 13, 1990; 56 FR 559, Jan. 7, 1991; 56 FR 3419, Jan. 30, 1991; T.D. 8895, 65 FR 50407, Aug. 18, 2000]

§ 1.6046–1 Returns as to organization or reorganization of foreign corporations and as to acquisitions of their stock, on or after January 1, 1963.

(a) *Officers or directors*—(1) *When liability arises on January 1, 1963.* Each U.S. citizen or resident who is on January 1, 1963, an officer or director of a foreign corporation shall make a return on Form 959 showing the name, address, and identifying number of each U.S. person who, on January 1, 1963, owns 5 percent or more in value of the outstanding stock of such foreign corporation.

(2) *When liability arises after January 1, 1963*—(i) *Requirement of return.* Each U.S. citizen or resident who is at any time after January 1, 1963, an officer or director of a foreign corporation shall make a return on Form 959 setting forth the information described in subdivision (ii) of this subparagraph with respect to each U.S. person who, during the time such citizen or resident is such an officer or director:

(a) Acquires (whether in one or more transactions) outstanding stock of such corporation which has, or which when added to any such stock then owned by him (excluding any stock owned by him on January 1, 1963, if on that date he owned 5 percent or more in value of such stock) has, a value equal to 5 percent or more in value of the outstanding stock of such foreign corporation, or

(b) Acquires (whether in one or more transactions) an additional 5 percent or more in value of the outstanding stock of such foreign corporation.

(ii) *Information required to be shown on return.* The return required under subdivision (i) of this subparagraph shall contain the following information:

(a) Name, address, and identifying number of each shareholder with respect to whom the return is filed;

(b) A statement showing that the shareholder is either described in subdivision (i)*(a)* or (i)*(b)* of this subparagraph; and

(c) The date on which the shareholder became a person described in subdivision (i)*(a)* or (i)*(b)* of this subparagraph.

(3) *Application of rules.* The provisions of this paragraph may be illustrated by the following examples:

Example (1). A, a United States citizen, is, on January 1, 1963, a director of M, a foreign corporation. X, on January 1, 1963, is a United States person owning 5 percent in value of the outstanding stock of M Corporation. A must file a return under the provisions of subparagraph (1) of this paragraph.

Example (2). The facts are the same as in Example (1) except that X owns only 2 percent in value of the outstanding stock of M Corporation on January 1, 1963. On July 1, 1963, X acquires 2 percent in value of the outstanding stock of M Corporation and on September 1, 1963, he acquires an additional 2 percent in value of such stock. The July 1, 1963, transaction does not give rise to liability to file a return; however, A must file a return as a result of the September 1, 1963, transaction because X's holdings now exceed 5 percent.

Example (3). The facts are the same as in Example (2) and, on September 15, 1963, X acquires an additional 4 percent in value of the outstanding stock of M Corporation (X's total holdings are now 10 percent). On November 1, 1963, X acquires an additional 2 percent in value of the outstanding stock of M Corporation. The September 15, 1963, transaction does not give rise to liability to file a return since X has not acquired 5 percent in value of the outstanding stock of M Corporation since A last became liable to file a return. However, A must file a return as a result of the November 1, 1963, transaction because X has not acquired an additional 5 percent in value of the outstanding stock of M Corporation.

Example (4). The facts are the same as in examples (2) and (3) and, in addition, B, a United States citizen, becomes an officer of M Corporation on October 1, 1963. B is not required to file a return either as a result of the facts set forth in Example (2) or as a result of the September 15, 1963, transaction described in Example (3). However, B is required to file a return as a result of the November 1, 1963, transaction described in Example (3) because X has acquired an additional 5 percent in value of the outstanding stock of M Corporation while B is an officer or director.

(b) *Returns required of U.S. persons when liability to file arises on January 1, 1963.* Each U.S. person who, on January 1, 1963, owns 5 percent or more in value of the outstanding stock of a foreign corporation, shall make a return on Form 959 with respect to such foreign

corporation setting forth the following information:

(1) The name, address, and identifying number of the shareholder (or shareholders) filing the return, and the internal revenue district in which such shareholder filed his most recent United States income tax return;

(2) The name, business address, and employer identification number, if any, of the foreign corporation, the name of the country under the laws of which it is incorporated, and the name of the country in which is located its principal place of business;

(3) The date of organization and, if any, of each reorganization of the foreign corporation if such reorganization occurred on or after January 1, 1960, while the shareholder owned 5 percent or more in value of the outstanding stock of such corporation;

(4) The name and address of the foreign corporation's statutory or resident agent in the country of incorporation;

(5) The name, address, and identifying number of any branch office or agent of the foreign corporation located in the United States;

(6) If the foreign corporation has filed a United States income tax return, or participated in the filing of a consolidated return, for any of its last three calendar or fiscal years immediately preceding January 1, 1963, state each year for which a return was filed (including, in the case of a consolidated return, the name of the corporation filing such return), the type of form used, the internal revenue office to which it was sent, and the amount of tax, if any, paid;

(7) The name and address of the person (or persons) having custody of the books of account and records of the foreign corporation, and the location of such books and records if different from such address;

(8) The names, addresses, and identifying numbers of all United States persons who are principal officers (for example, president, vice president, secretary, treasurer, and comptroller) or members of the board of directors of the foreign corporation as of January 1, 1963;

(9) A complete description of the principal business activities in which the foreign corporation is actually engaged and, if the foreign corporation is a member of a group constituting a chain of ownership with respect to each unit of which the shareholder owns 5 percent or more in value of the outstanding stock, a chart showing the foreign corporation's position in the chain of ownership and the percentages of ownership;

(10) The following information prepared in accordance with generally accepted accounting principles and in such detail as is customary for the corporation's accounting records:

(i) The corporation's profit and loss statement for the most recent complete annual accounting period; and

(ii) The corporation's balance sheet as of the end of the most recent complete annual accounting period;

(11) A statement showing as of January 1, 1963, the amount and type of any indebtedness of the foreign corporation:

(i) To any United States person owning 5 percent or more in value of its stock, or

(ii) To any other foreign corporation owning 5 percent or more in value of the outstanding stock of the foreign corporation with respect to which the return is filed provided that the shareholder filing the return owns 5 percent or more in value of the outstanding stock of such other foreign corporation,

together with the name, address, and identifying number, if any, of each such shareholder or entity;

(12) A statement, as of January 1, 1963, showing the name, address, and identifying number, if any, of each person who is, on January 1, 1963, a subscriber to the stock of the foreign corporation, and the number of shares subscribed to by each;

(13) A statement showing the number of shares of each class of stock of the foreign corporation owned by each shareholder filing the return and:

(i) If such stock was acquired after December 31, 1953, the dates of acquisition, the amounts paid or value given therefor, the method of acquisition, i.e., by original issue, purchase on open market, direct purchase, gift, inheritance, etc., and from whom acquired; or

(ii) If such stock was acquired before Janaury 1, 1954, a statement that such stock was acquired before such date, and the value at which such stock is carried on the books of such shareholder;

(14) A statement showing as of January 1, 1963, the name, address, and identifying number of each United States person who owns 5 percent or more in value of the outstanding stock of the foreign corporation, the classes of stock held, the number of shares of each class held, including the name, address, and identifying number, if any, of each actual owner if such person is different from the shareholder of record and a statement of the nature and amount of the interests of each such actual owner; and

(15) The total number of shares of each class of outstanding stock of the foreign corporation (or other data indicating the shareholder's percentage of ownership).

(c) *Returns required of U.S. persons when liability to file arises after January 1, 1963*—(1) *U.S. persons required to file.* A return on Form 959, containing the information required by subparagraph (3) of this paragraph, shall be made by each U.S. person when at any time after January 1, 1963:

(i) Such person acquires (whether in one or more transactions) outstanding stock of such foreign corporation which has, or which when added to any such stock then owned by him (excluding any stock owned by him on January 1, 1963, if on that date he owned 5 percent or more in value of such stock) has, a value equal to 5 percent or more in value of the outstanding stock of such foreign corporation, or

(ii) Such person, having already acquired the interest referred to in paragraph (b) of this section or in subdivision (i) of this subparagraph—

(a) Acquires (whether in one or more transactions) an additional 5 percent or more in value of the outstanding stock of such foreign corporation,

(b) Owns 5 percent or more in value of the outstanding stock of such foreign corporation when such foreign corporation is reorganized (as defined in paragraph (f)), or

(c) Disposes of sufficient stock in such foreign corporation to reduce his interest to less than 5 percent in value of the outstanding stock of such foreign corporation.

The provisions of this subparagraph may be illustrated by the following examples:

Example (1). On January 15, 1963, A, a United States person, acquires 5 percent in value of the outstanding stock of M, a foreign corporation. A must file a return under the provisions of this subparagraph.

Example (2). On January 1, 1963, B, a United States person, owns 2 percent in value of the outstanding stock of M, a foreign corporation. B is not required to file a return under the provisions of this section because he does not own 5 percent or more in value of the outstanding stock of M Corporation. On February 1, 1963, B acquires an additional 3 percent in value of the outstanding stock of M Corporation. B must file a return under the provisions of this subparagraph.

Example (3). On January 1, 1963, C, a United States person, owns 6 percent in value of the outstanding stock of M, a foreign corporation. C must file a return under the provisions of paragraph (b) of this section. On February 1, 1963, C acquires an additional 2 percent in value of the outstanding stock of M Corporation in a transaction not involving a reorganization. C is not required to file a return under the provisions of this subparagraph.

Example (4). The facts are the same as in Example (3) except that, in addition, on April 1, 1963, C acquires 2 percent in value of the outstanding stock of M Corporation in a transaction not involving a reorganization. (C's total holdings are now 10 percent.) C is not required to file a return under the provisions of this subparagraph because he has not acquired 5 percent or more in value of the outstanding stock of M Corporation since he last became liable to file a return. On May 1, 1963, C acquires 1 percent in value of the outstanding stock of M Corporation. C must file a return under the provisions of this subparagraph.

Example (5). On June 1, 1963, D, a United States person, owns 12 percent in value of the outstanding stock of M, a foreign corporation. Also, on June 1, 1963, M Corporation is reorganized and, as a result of such reorganization, D owns only 6 percent of the outstanding stock of such foreign corporation. D must file a return under the provisions of this subparagraph.

Example (6). The facts are the same as in Example (5) except that, in addition, on November 1, 1970, D donates 2 percent of the outstanding stock of M Corporation to a charity. Since D has disposed of sufficient stock to reduce his interest in M Corporation to less than 5 percent in value of the outstanding stock of such corporation, D must

file a return under the provisions of this subparagraph.

(2) *Shareholders who become U.S. persons.* A return on Form 959, containing the information required by subparagraph (3) of this paragraph, shall be made by each person who at any time after Janaury 1, 1963, becomes a U.S. person while owning 5 percent or more in value of the outstanding stock of such foreign corporation.

(3) *Information required to be shown on return*—(i) *In general.* The return on Form 959, required to be filed by persons described in subparagraph (1) or (2) of this paragraph, shall set forth the same information as is required by the provisions of paragraph (b) of this section except that where such provisions require information with respect to January 1, 1963, such information shall be furnished with respect to the date on which liability arises to file the return required under this paragraph.

(ii) *Additional information.* In addition to the information required under subdivision (i) of this subparagraph, the following information shall also be furnished in the return required under this paragraph:

(a) The date on or after January 1, 1963, if any, on which such shareholder (or shareholders) last filed a return under this section with respect to the corporation;

(b) If a return is filed by reason of becoming a United States person, the date the shareholder became a United States person;

(c) If a return is filed by reason of the disposition of stock, the date and method of such disposition and the person to whom such disposition was made; and

(d) If a return is filed by reason of the organization or reorganization of the foreign corporation on or after January 1, 1963, the following information with respect to such organization or reorganization:

(1) A statement showing a detailed list of the classes and kinds of assets transferred to the foreign corporation including a description of the assets (such as a list of patents, copyrights, stock, securities, etc.), the fair market value of each asset transferred (and, if such asset is transferred by a United States person, its adjusted basis), the date of transfer, the name, address, and identifying number, if any, of the owner immediately prior to the transfer, and the consideration paid by the foreign corporation for such transfer;

(2) A statement showing the assets transferred and the notes or securities issued by the foreign corporation, the name, address, and identifying number, if any, of each person to whom such transfer or issue was made, and the consideration paid to the foreign corporation for such transfer or issue; and

(3) An analysis of the changes in the corporation's surplus accounts occurring on or after January 1, 1963.

(iii) *Exclusion of information previously furnished.* In any case where any identical item of information required to be filed under this paragraph by a shareholder with respect to a foreign corporation has previously been furnished by such shareholder in any return made in accordance with the provisions of this section, such shareholder may satisfy the requirements of this paragraph by filing Form 959, identifying such item of information, the date furnished, and stating that it is unchanged.

(d) *Associations, etc.* Returns are required to be filed in accordance with the provisions of this section with respect to any foreign association, foreign joint-stock company, or foreign insurance company, etc., which would be considered to be a corporation under § 301.7701–2 of this chapter (Regulations on Procedure and Administration). Persons who would qualify by the nature of their functions and ownership in such associations, etc., as officers, directors, or shareholders thereof will be treated as such for purposes of this section without regard to their designations under local law.

(e) *Special provisions*—(1) *Return jointly made.* Any two or more persons required under paragraph (a) of this section to make a return with respect to one or more shareholders of the same corporation, or under paragraph (b) or (c) of this section to make a return with respect to the same corporation, may in lieu of making several returns, jointly make one return.

(2) *Separate return for each corporation.* When returns are required with

respect to more than one foreign corporation, a separate return must be made for each corporation.

(3) *Use of power of attorney by officers or directors*—(i) *In general.* Any two or more persons required under paragraph (a) of this section to make a return with respect to one or more shareholders of the same corporation may, by means of one or more duly executed powers of attorney, constitute one of their number as attorney in fact for the purpose of making such returns or for the purpose of making a joint return under subparagraph (1) of this paragraph.

(ii) *Nature of power of attorney.* The power of attorney referred to in subdivision (i) of this subparagraph shall be limited to the making of returns required under paragraph (a) of this section and shall be limited to a single calendar year with respect to which such returns are required.

(iii) *Manner of execution of power of attorney.* The use of technical language in the preparation of the power of attorney referred to in subdivision (i) of this subparagraph is not necessary. Such power of attorney shall be signed by the individual United States citizen or resident required to file a return or returns under paragraph (a) of this section. Such power of attorney must be acknowledged before a notary public or, in lieu thereof, witnessed by two disinterested persons. The notarial seal must be affixed unless such seal is not required under the laws of the state or country wherein such power of attorney is executed.

(iv) *Manner of execution of return under authority of power of attorney.* A return made under authority of one or more powers of attorney referred to in subdivision (i) of this subparagraph shall be signed by the attorney in fact for each principal for which such attorney in fact is acting. A copy of such one or more powers of attorney shall be kept at a convenient and safe location accessible to internal revenue officers, and shall at all times be available for inspection by such officers.

(v) *Effect on penalties.* The fact that a return is made under authority of a power of attorney referred to in subdivision (i) of this subparagraph shall not affect the principal's liability for penalties provided for failure to file a return required under paragraph (a) of this section or for filing a false or fraudulent return.

(4) *Persons excepted from filing returns*—(i) *Return required of officer or director under paragraph (a)(1).* Notwithstanding paragraph (a)(1) of this section, any U.S. citizen or resident required to make a return under such paragraph with respect to shareholders of a foreign corporation, need not make such return if, on January 1, 1963, three or fewer U.S. persons own 95 percent or more in value of the outstanding stock of such foreign corporation and file a return or returns with respect to such corporation under paragraph (b) of this section.

(ii) *Return required of officer or director under paragraph (a)(2).* Notwithstanding paragraph (a)(2) of this section, any U.S. citizen or resident required to make a return under such paragraph with respect to a person acquiring stock of a foreign corporation in an acquisition described in subdivision (i)*(a)* or *(b)* of such paragraph need not make such return, if:

(a) As a result of such acquisition of stock of such foreign corporation, a U.S. person files a return as a shareholder under paragraph (c) (1) of this section, and

(b) Immediately after such acquisition of stock, three or fewer U.S. persons own 95 percent or more in value of the outstanding stock of such foreign corporation.

(iii) *Return required by reason of attribution rules.* Notwithstanding paragraph (b) or (c) of this section, any person required to make a return under such paragraph with respect to a foreign corporation need not make such return, if:

(a) Such person does not directly own an interest in the foreign corporation,

(b) Such person is required to furnish the information solely by reason of attribution of stock ownership from a U.S. person under paragraph (i) of this section, and

(c) The person from whom the stock ownership is attributed furnishes all of the information required under paragraph (b) or (c) of this section of the person to whom such stock ownership is attributed.

(iv) *Return required of officer or director with respect to person described in subdivision (iii).* Notwithstanding paragraph (a) of this section, any U.S citizen or resident required to make a return under such paragraph with respect to a person exempted under subdivision (iii) of this subparagraph from making a return need not make a return with respect to such person.

(5) *Persons excepted from furnishing items of information.* Any person required to furnish any item of information under paragraph (b) or (c) of this section with respect to a foreign corporation, may, if such item of information is furnished by another person having an equal or greater stock interest (measured in terms of value of such stock) in such foreign corporation, satisfy such requirement by filing a statement with his return on Form 959 indicating that such liability has been satisfied and identifying the return in which such item of information was included.

(f) *Meaning of terms.* For purposes of this section:

(1) *Acquisition.* Stock in a foreign corporation shall be considered acquired when a person has an unqualified right to receive such stock even though such stock is not actually issued. For example, when under the law of a foreign country, all the necessary steps for incorporation are completed but stock in the corporation will not be issued within 30 days, every United States citizen or resident who is an officer or a director of such corporation, provided a United States person has an interest of 5 percent or more in such corporation, and every such United States person shall, within 90 days of the date of incorporation, file the returns required under section 6046 and this section. In the case of a reorganization, new stock may be acquired, depending on the type of reorganization, whether or not any stock certificates are surrendered or exchanged or the designation of such stock is altered.

(2) *Reorganization.* With respect to a foreign corporation, the term ''reorganization'' shall mean not only a transaction described in section 368(a)(1) and the regulations thereunder but also any other transaction or series of transactions which has the same effect.

(3) *U.S. person.* For purposes of section 6046 and this section the term ''United States person'' has the meaning assigned to it by section 7701(a)(30) of the Code, except that:

(i) With respect to a corporation organized under the laws of the Commonwealth of Puerto Rico, such term does not include an individual who is a bona fide resident of Puerto Rico, if a dividend received by such individual during the taxable year from such corporation would, for purposes of section 933(1), be treated as income derived from sources within Puerto Rico,

(ii) With respect to a corporation organized under the laws of the Virgin Islands, such term does not include an individual who is a bona fide resident of the Virgin Islands and whose income tax obligation under subtitle A (relating to income taxes) of the Code for the taxable year is satisfied pursuant to section 28(a) of the Revised Organic Act of the Virgin Islands, approved July 22, 1954 (48 U.S.C. 1642), by paying tax on income derived from all sources both within and outside the Virgin Islands into the treasury of the Virgin Islands, and

(iii) With respect to a corporation organized under the laws of any possession of the United States (other than Puerto Rico or the Virgin Islands), such term does not include an individual who is a bona fide resident of such possession and whose income derived from sources within any possession of the United States is not, by reason of section 931(a), includible in gross income under subtitle A (relating to income taxes) of the Code for the taxable year.

The provisions of paragraph (b), (c), or (d), respectively, of §1.957–4 shall apply for purposes of determining whether an individual is excepted under subdivision (i), (ii), or (iii), respectively, of this subparagraph from being a U.S. person with respect to a corporation described in such subdivision.

(4) *Applicable Form 959.* The Form 959 which shall be used for purposes of this section is Form 959 (Revised January 1963) or such subsequent revision of such form as may be in use at the time the liability to file a return on Form 959 arises.

(5) *Accounting period and taxable year.* In the case of a specified foreign corporation (as defined in section 898), the taxable year of such corporation shall be treated as its annual accounting period.

(g) *Method of reporting.* All amounts furnished in returns prescribed under this section shall be expressed in United States currency with a statement of the exchange rates used. All statements required to be submitted on or with returns under this section shall be rendered in the English language. For taxable years ending after December 31, 1994, with respect to returns filed after December 31, 1995, all amounts furnished under paragraph (c) of this section shall be expressed in United States dollars computed and translated in conformity with United States generally accepted accounting principles. Amounts furnished under paragraph (c)(3)(i) of this section shall also be furnished in the foreign corporation's functional currency as required on the form. Information described in paragraphs (b)(10) and (c)(3) of this section shall be submitted in such form or manner as the form shall prescribe. If an individual who is a United States person required to make a return with respect to a foreign corporation under section 6046 is entitled under a treaty to be treated as a nonresident of the United States, and if the individual claims this treaty benefit, and if there are no other United States persons that are required to furnish information under section 6046 with respect to the foreign corporation, then the individual may satisfy the requirements of paragraphs (b)(10), (11) and (12), (c)(3)(ii)(*d*), and (g) of this section by filing the audited foreign financial statements of the foreign corporation with the individual's return required under section 6046.

(h) *Actual ownership of stock.* If any shareholder, referred to in this section, is not the actual owner of the stock of the foreign corporation, the information required under this section shall be furnished in the name of and by such actual owner. For example, in the case of stock held by a nominee, the information required under this section shall be furnished by the actual owner of such stock.

(i) *Constructive ownership of stock*—(1) *In general.* Stock owned directly or indirectly by or for a foreign corporation or a foreign partnership shall be considered as being owned proportionately by its shareholders or partners. Thus, any United States person who is a member of a nonresident foreign partnership which becomes a shareholder in a foreign corporation shall be considered to be a shareholder in such foreign corporation to the extent of his proportionate share in such partnership.

(2) *Members of family.* An individual shall be considered as owning the stock owned directly or indirectly by or for his brothers and sisters (whether by the whole or half blood), his spouse, his ancestors, and his lineal descendants. However, when stock is treated as owned by an individual under the rule provided in this subparagraph, it shall not be treated as owned by him for the purpose of again applying such rule in order to make another the constructive owner of such stock. The provisions of this subparagraph may be illustrated by the following example:

Example. H, W, and HF are United States citizens. W, wife of H, owns 20 percent of the value of the outstanding stock of X, a foreign corporation. X Corporation owns 90 percent of the value of the outstanding stock of Y Corporation, a foreign corporation. Y Corporation becomes the owner of 50 percent of the value of the outstanding stock of each of two newly organized foreign corporations, M and N. In applying the ''members of family'' rule, H is considered to own 20 percent of the value of the outstanding stock of X Corporation, and 18 percent of the value of the outstanding stock of Y Corporation, and 9 percent of M Corporation and N Corporation. However, HF, the father of H, is not considered to own stock of X, Y, M, or N since his son, H, is not treated as the owner of such stock for purposes of again applying the ''members of family'' rule.

(j) *Time and place for filing return*—(1) *Time for filing.* Any return required by section 6046 and this section shall be filed on or before the 90th day after the date on which a United States citizen, resident, or person becomes liable to file such return under any provision of section 6046(a) and of paragraph (a), (b), or (c) of this section. With respect to returns filed after September 3, 1982, such return shall be filed on or before

such later date (if any) as may be authorized by the return form. The Director of the Internal Revenue Service Center where the return is required to be filed is authorized to grant reasonable extensions of time for filing returns under section 6046 and this section in accordance with the applicable provisions of section 6081(a) and § 1.6081–1.

(2) *Place for filing*. Returns required by section 6046 and this section shall be filed with the Internal Revenue Service Center designated in the instructions of the applicable form.

(k) *Penalties*. (1) For criminal penalties for failure to file a return and filing a false or fraudulent return, see sections 7203, 7206, and 7207.

(2) For civil penalty for failure to file return, or failure to show information required on a return, under this section, see section 6679.

(Approved by the Office of Management and Budget under control number 1545-0794)

[T.D. 6623, 27 FR 11882, Dec. 1, 1962, as amended by T.D. 6997, 34 FR 932, Jan. 22, 1969; T.D. 7322, 39 FR 30932, Aug. 27, 1974; T.D. 7925, 48 FR 55454, Dec. 13, 1983; T.D. 8573, 59 FR 64302, Dec. 14, 1994; T.D. 8733, 62 FR 53385, Oct. 14, 1997]

§ 1.6046–2 Returns as to foreign corporations which are created or organized, or reorganized, on or after September 15, 1960, and before January 1, 1963.

(a) *Requirement of returns*. In the case of any foreign corporation which is created or organized, or reorganized, on or after September 15, 1960, and before January 1, 1963:

(1) Each United States citizen or resident who was an officer or director of such corporation at any time within 60 days after such creation or organization, or reorganization, and

(2) Each United States shareholder of such corporation by or for whom, at any time within 60 days after such creation or organization, or reorganization, 5 percent or more in value of such corporation's then outstanding stock was owned directly or indirectly (including, in the case of an individual stock owned by members of his family), shall file a return on Form 959 (Rev. Oct. 1960), United States Information Return With Respect to the Creation or Organization, or Reorganization, of a Foreign Corporation.

(b) *Information required to be shown on return*. The return required by section 6046, prior to its amendment by section 20(b) of the Revenue Act of 1962, and this section shall set forth the following information:

(1) The name and address of the person (or persons) filing the return, and an indication that he is a United States shareholder, officer, or director;

(2) The name and business address of the foreign corporation;

(3) The name of the country under the laws of which the foreign corporation was created or organized, or reorganized;

(4) The name and address of the foreign corporation's statutory or resident agent in the country of incorporation;

(5) The date of the foreign corporation's creation or organization, or reorganization;

(6) A statement of the manner in which the creation or organization, or reorganization, of the foreign corporation was effected;

(7) A complete statement of the reasons for, and the purposes sought to be accomplished by, the creation or organization, or reorganization, of the foreign corporation;

(8) A statement showing the classes and kinds of assets transferred to the foreign corporation in connection with its creation or organization, or reorganization, including a list completely describing each asset or group of assets, its value, date of transfer, and the name and address of person (or persons) owning such asset or group immediately prior to the transfer;

(9) A statement showing the assets transferred and the securities issued by the foreign corporation in its creation or organization or reorganization, as well as the name and address of each person to whom such a transfer or issuance was made;

(10) A statement specifying the amount and type of any indebtedness due from the foreign corporation to each of its shareholders and the name of each such shareholder;

(11) The names and addresses of the shareholders of the foreign corporation

at the time of its creation or organization or reorganization, and the classes of stock and number of shares held by each;

(12) The names and addresses of subscribers to the stock of the foreign corporation, and the number of shares subscribed to by each; and

(13) The name and address of the person (or persons) having custody of the books of account and records of the foreign corporation, and the location of such books and records if different from such address.

(c) *Time and place for filing return.* The return required by section 6046, prior to its amendment by section 20(b) of the Revenue Act of 1962, and this section shall be filed with the Internal Revenue Service Center designated in the instructions of the applicable form. Such return shall be filed on or before the 90th day after the date such foreign corporation is created or organized, or reorganized.

[T.D. 6623, 27 FR 11882, Dec. 1, 1962, as amended by T.D. 7322, 39 FR 30932, Aug. 27, 1974]

§ 1.6046–3 Returns as to formation or reorganization of foreign corporations prior to September 15, 1960.

(a) *Requirement of returns.* Every attorney, accountant, fiduciary, bank, trust company, financial institution, or other person, who, on or before September 14, 1960, aids, assists, counsels, or advises in, or with respect to, the formation, organization, or reorganization of any foreign corporation shall file an information return on Form 959 (as in use prior to the October 1960 revision). The return must be filed in every such case regardless of:

(1) The nature of the counsel or advice given, whether for or against the formation, organization, or reorganization of the foreign corporation, or the nature of the aid or assistance rendered, and

(2) The action taken upon the advice or counsel, that is, whether the foreign corporation is actually formed, organized or reorganized.

(b) *Special provisions*—(1) *Employers.* In the case of aid, assistance, counsel, or advice in, or with respect to, the formation, organization, or reorganization of a foreign corporation given by a person in whole or in part through the medium of employees (including, in the case of a corporation, the officers thereof), the return made by the employer must set forth in detail the information required by this section including that which, as an incident to such employment, is within the possession or knowledge or under the control of such employees.

(2) *Employees.* The obligation of an employee (including, in the case of a corporation, the officers thereof) to file a return with respect to any aid, assistance, counsel, or advice in or with respect to the formation, organization, or reorganization of a foreign corporation, given as an incident to his employment, will be satisfied if a return as prescribed by this section is duly filed by the employer. Clerks, stenographers, and other employees rendering aid or assistance solely of a clerical or mechanical character in or with respect to the formation, organization, or reorganization of a foreign corporation are not required to file returns by reason of such services.

(3) *Partners.* In the case of aid, assistance, counsel, or advice in, or with respect to, the formation, organization, or reorganization of a foreign corporation given by one or more members of a partnership in the course of its business, the obligation of each such individual member to file a return will be satisfied if a return as prescribed by this section is duly filed by the partnership executed by all the members of the firm who gave any such aid, assistance, counsel, or advice. If, however, the partnership has been dissolved at the time the return is due, individual returns must be filed by each member of the former partnership who gave any such aid, assistance, counsel, or advice.

(4) *Return jointly made.* If two or more persons aid, assist, counsel, or advise in, or with respect to, the formation, organization, or reorganization of a particular foreign corporation, any two or more of such persons may, in lieu of filing several returns, jointly execute and file one return.

(5) *Separate return for each corporation.* If a person aids, assists, counsels, or advises in, or with respect to, the formation, organization, or reorganization of more than one foreign corporation, a separate return must be filed

with respect to each foreign corporation.

(c) *Information required to be shown on return.* The return required by section 6046, prior to its amendment by section 7(a) of the Act of September 14, 1960, and this section shall set forth the following information to the extent the information is within the possession or knowledge, or under the control, of the person filing the return:

(1) The name and address of the person (or persons) to whom, and the person (or persons) for whom, or on whose behalf, the aid, assistance, counsel, or advice was given;

(2) The name and address of the foreign corporation and the country under the laws of which it was formed, organized, or reorganized;

(3) The month and year when the foreign corporation was formed, organized, or reorganized;

(4) A statement of the manner in which the formation, organization, or reorganization of the foreign corporation was effected;

(5) A complete statement of the reasons for, and the purposes sought to be accomplished by, the formation, organization, or reorganization of the foreign corporation;

(6) A statement showing the classes and kinds of assets transferred to the foreign corporation in connection with its formation, organization, or reorganization, including a detailed list of any stock or securities included in such assets, and a statement showing the names and addresses of the persons who were the owners of such assets immediately prior to the transfer;

(7) The names and addresses of the shareholders of the foreign corporation at the time of the completion of its formation, organization, or reorganization, showing the classes of stock and number of shares held by each and, in the case of Forms 959 filed after December 31, 1958, the names and addresses of the subscribers to the stock of the foreign corporation and the number of shares subscribed to by each;

(8) The name and address of the person (or persons) having custody of the books of account and records of the foreign corporation; and

(9) Such other information as is required by the return form.

(d) *Privileged communications.* An attorney-at-law is not required to file a return with respect to any advice given or information obtained through the relationship of attorney and client.

(e) *Time and place for filing return*—(1) *Time for filing.* Returns required by section 6046, prior to its amendment by section 7(a) of the Act of September 14, 1960, and this section shall be filed within 30 days after the first performance of any of the functions referred to in paragraph (a) of this section. If in a particular case, the aid, assistance, counsel, or advice given by any person extends over a period of more than one day, such person, to avoid multiple filing of returns, shall file a return within 30 days after either of the following events:

(i) The formation, organization, or reorganization of the foreign corporation, or

(ii) The termination of his aid, assistance, counsel, or advice in, or with respect to, the formation, organization, or reorganization of the foreign corporation.

(2) *Place for filing.* Returns required by section 6046 of the Internal Revenue Code of 1954 and this section shall be filed with the Internal Revenue Service Center designated in the instructions of the applicable form.

(f) *Penalties.* For criminal penalties for failure to file a return and filing a false or fraudulent return, see sections 7203, 7206, and 7207.

[T.D. 6500, 25 FR 12108, Nov. 26, 1960, as amended by T.D. 6623, 27 FR 11882, Dec. 1, 1962; T.D. 7322, 39 FR 30932, Aug. 27, 1974]

§ 1.6047–1 Information to be furnished with regard to employee retirement plan covering an owner-employee.

(a) *Trustees and insurance companies*—(1) *Requirement of return.* (i) Every trustee of a trust described in section 401(a) and exempt from tax under section 501(a) which makes payments of amounts described in subparagraph (2) of this paragraph aggregating $10 or more during any calendar year to an individual (or his beneficiary) who was covered, within the meaning of paragraph (a)(2) of § 1.401–10, as an owner-employee under the plan of which such trust is a part shall make a return on

Forms 1096 and 1099 for such year showing the name and address of the person to whom paid, the aggregate amount of such payments, specifically identified as an amount to which this paragraph applies, and such other information as is required by the forms. A separate Form 1099 shall be filed with respect to each payee. The term ''owner-employee'' means an owner-employee as defined in section 401(c)(3) and paragraph (d) of §1.401–10. Any custodial account which satisfies the requirements of section 401(f) shall be treated as a qualified trust and the custodian of such a custodial account must comply with the requirements of this section as if he were the trustee.

(ii) Every issuer of a contract which is treated as an annuity contract under sections 401 through 404 purchased by a trust described in section 401(a) and exempt from tax under section 501(a) or under a plan described in section 403(a) which makes payments of amounts described in subparagraph (2) of this paragraph aggregating $10 or more during any calendar year to an individual (or his beneficiary) who was covered, within the meaning of paragraph (a)(2) of §1.401–10, as an owner-employee under the plan of which such trust is a part or under which such contract was purchased shall make a return on Forms 1096 and 1099 for such year showing the name and address of the person to whom paid, the aggregate amount of such payments, specifically identified as an amount to which this paragraph applies, and such other information as is required by the form. A separate Form 1099 shall be filed with respect to each payee.

(2) *Amounts subject to this section*. The amounts subject to reporting under subparagraph (1) of this paragraph include all amounts distributed or made available to which section 402(a) (relating to employees' trusts) or section 403(a) (relating to employee annuity plans) applies, whether or not such amounts are includible in gross income and whether or not attributable to contributions made while the individual to whom they relate was an owner-employee. However, amounts subject to reporting do not include any amounts distributed or made available by the trustee of any trust or the issuer of any contract under any plan with respect to which he has not received the notification provided in either subparagraph (3) of this paragraph or paragraph (b) of this section. Amounts distributed or made available under the plan include, for example, amounts received by the individual as loans on contracts purchased under the plan, and payments made to the individual by reason of the surrender of contracts purchased under the plan, whether or not prior to their maturity.

(3) *Notification by trustee*. The trustee of any trust described in section 401(a) and exempt from tax under section 501(a) who receives notification from any owner-employee that contributions have been made to the trust on behalf of that owner-employee as an owner-employee shall notify in writing the issuer of any contract which is treated as an annuity contract under sections 401 through 404 purchased by the trust for the benefit of that owner-employee that such contributions have been made to such trust. Such notification shall be delivered to such issuer at the time such contract is purchased or within 90 days after the notification required by paragraph (b) of this section is received by the trustee, whichever is later. Only one such notification must be made with respect to any contract.

(4) *Record keeping*. Any trustee, insurance company, or other person, which is referred to in subparagraph (1) of this paragraph and which is notified under section 6047(b) that contributions to the trust or under the plan have been made on behalf of an owner-employee shall maintain a record of such notification until all funds of the trust or under the plan on behalf of the owner-employee have been distributed.

(5) *Inclusion of other payments*. The Form 1099 filed under this section by any person with respect to payments to another person during a calendar year may, at the election of the maker, include other payments made by him to such other person during such year which are required to be reported on Form 1099.

(6) *Time and place for filing*. The return required under this section for any calendar year shall be filed after the close of that year and on or before

February 28 (March 31 if filed electronically) of the following year with any of the Internal Revenue Service Centers, the addresses of which are listed in the instructions for Form 1096. For extensions of time for filing returns under this section, see § 1.6081–1.

(b) *Notification by owner-employee.* Any owner-employee on behalf of whom contributions are made to a trust described in section 401(a) and exempt under section 501(a) or under a plan described in section 403(a) shall notify in writing:

(1) The trustee of such a trust, or

(2) The issuer of any contract which is treated as an annuity contract under sections 401 through 404 under such plan,

that such contributions have been made to such trust or plan. Such notification shall be delivered to such trustee or such issuer during the first calendar year in which such contributions are made or on or before February 28 of the year following such year. Only one such notification must be made with respect to any contract or any trust.

(c) *Penalties.* For civil penalty for failure to file a return required by this section, and for criminal penalty for furnishing fraudulent information under this section, see §§ 301.6652–3 and 301.7207–1 respectively.

(d) *Permission to submit information required by Form 1099 on magnetic tape.* For rules relating to permission to submit the information required by Form 1099 on magnetic tape or other media, see § 1.9101–1.

[T.D. 6677, 28 FR 10147, Sept. 17, 1963, as amended by T.D. 6883, 31 FR 6589, May 3, 1966; T.D. 7551, 43 FR 29292, July 7, 1978; T.D. 8895, 65 FR 50407, Aug. 18, 2000]

§ 1.6049–1 Returns of information as to interest paid in calendar years before 1983 and original issue discount includible in gross income for calendar years before 1983.

(a) *Requirement of reporting*—(1) *In general.* (i) Every person who makes payments of interest (as defined in § 1.6049–2) aggregating $10 or more to any other person during a calendar year before 1983 shall make an information return on Forms 1096 and 1099 for such calendar year showing the aggregate amount of such payments, the name and address of the person to whom paid, the total of such payments for all persons, and such other information as is required by the forms.In the case of interest paid during calendar years beginning with 1963 and continuing until such time as the Commissioner determines that it is feasible to aggregate payments on two or more accounts, insurance contracts, or investment certificates and this subdivision is amended accordingly to provide for reporting on an aggregate basis, the requirement of this subdivision for the filing of Form 1099 will be met if a person making payments of interest to another person on two or more such accounts, insurance contracts, or investment certificates, files a separate Form 1099 with respect to each such account, contract, or certificate on which $10 or more of interest is paid to such other person during the calendar year. In the case of evidences of indebtedness described in section 6049(b)(1)(A), separate Forms 1099 may be filed as provided in the preceding sentence with respect to holdings in different issues. Thus, if a bank pays to a person interest totaling $15 on one account and $20 on a second account, it may file separate Forms 1099 with respect to the payments of $15 and $20. If the interest on the second account totaled $5 instead of $20, no return would be required with respect to the $5.

(ii)*(a)* Every person which is a corporation that has outstanding any bond, debenture, note, or certificate or other evidence of indebtedness (referred to in this section and § 1.6049–2 as an obligation) in ''registered form'' (as defined in paragraph (d) of § 1.6049–2) issued after May 27, 1969 (other than an obligation issued by a corporation pursuant to a written commitment which was binding on May 27, 1969, and at all times thereafter) and on or before December 31, 1982, as to which there is during any calendar year before 1983 an amount of original issue discount (as defined in § 1.6049–2) aggregating $10 or more includible as interest in the gross income for such calendar year of any holder (determined, if semiannual record date reporting is being used under *(b)(1)* of this subdivision, by

treating each holder as holding the obligation on every day it was outstanding during the calendar year), shall make an information return on Forms 1096 and 1099–OID for such calendar year showing the following:

(1) The name and address of each record holder for whom such aggregate amount of original issue discount is $10 or more and, for calendar years subsequent to 1972, the account, serial, or other identifying number of each obligation for which a return is being made.

(2) The aggregate amount of original issue discount includible by each such holder for the period during the calendar year for which the return is made (or, if the aggregation rules of *(b)(2)* of this subdivision are being used, that he held the obligations). If however, the semiannual record date reporting rules are being used under *(b)(1)* of this subdivision, such aggregate amount shall be determined by treating each such record date holder as if he held each such obligation on every day it was outstanding during the calendar year. For purposes of this section, an obligation shall be considered to be outstanding from the date of original issue (as defined in paragraph (b)(3) of § 1.1232–3). In the case of a time deposit open account arrangement to which paragraph (e)(5) of § 1.1232–3A applies, for example, the amount to be shown under this subdivision *(2)* on the Forms 1096 and 1099–OID is the sum (computed under such paragraph (e)(5)) of the amounts separately computed for each deposit made pursuant to the arrangement.

(3) The issue price of the obligation (as defined in paragraph (b)(2) of § 1.1232–3).

(4) The stated redemption price of the obligation at maturity (as defined in paragraph (b)(1)(iii) of § 1.1232–3).

(5) The ratable monthly portion of original issue discount with respect to the obligation as defined in section 1232(a)(3)(A) (determined without regard to a reduction for a purchase allowance or whether the holder purchased at a premium).

(6) The name and address of the person filing the form.

(7) Such other information as is required by the form. And,

(8) The sum, for all such holders of the aggregate amounts of such original issue discount includible for such calendar year for each such holder.

(b) With respect to any obligation (other than an obligation to which paragraph (e) or (f) of § 1.1232–3A applies (relating respectively to deposits in banks and similar financial institutions and to face-amount certificates)), the issuing corporation (or an agent acting on its behalf):

(1) Shall be permitted (until this subdivision *(1)* is amended) to prepare a Form 1099–OID only for each person who is a holder of record of the obligation on the semiannual record date (if any) used by the corporation (or agent) for the payment of stated interest or, if there is no such date, the semiannual record dates shall be considered to be June 30, and December 31.

(2) Shall be permitted to aggregate all original issue discount with respect to 2 or more obligations of the same issue for which the amounts specified in *(a)(2)*, *(a)(3)*, *(a)(4)*, and *(a)(5)* of this subdivision are proportional and, therefore, may file one Form 1099–OID for all such obligations being aggregated, except that for calendar year 1971 this aggregation rule shall apply only where such specified amounts are identical. For an illustration of proportional aggregation, see example (4) in *(d)* of this subdivision.

(c) In any case in which any one holder of a particular obligation for the calendar year held such obligation on more than one record date, only one Form 1099–OID shall be filed for that year with respect to that holder and that obligation. This provision applies only in the case in which any corporation prepares Forms 1099–OID in accordance with the record date reporting rule of *(b)(1)* of this subdivision.

(d) The requirements of *(a)(3)*, *(a)(4)*, and *(a)(5)* of this subdivision shall not apply to a time deposit open account arrangement to which paragraph (e)(5) of § 1.1232–3A applies, or to a face-amount certificate to which paragraph (f) of § 1.1232–3A applies.

(e) The provisions of this subdivision (ii) may be illustrated by the following examples:

Example (1). On January 1, 1971, a corporation issued a 10-year bond in registered form

which pays stated interest to the holder of record on June 30 and December 31. The bond has an issue price (as defined in paragraph (b)(2) of § 1.1232–3) of $7,600, a stated redemption price (as defined in paragraph (b)(1) of § 1.1232–3) at maturity of $10,000, and a ratable monthly portion of original issue discount (as defined in section 1232(a)(3)(A)) of $20. The corporation's books indicate that A was the holder of record on June 30, 1971, and B was the holder on December 31, 1971. Under *(b)(1)* of this subdivision, the corporation is permitted to file separate Forms 1099–OID for both A and B showing, on each form, all items required by *(a)* of this subdivision, including the total original issue discount of $240 for the entire calendar year (which includes original issue discount for all holders), the issue price of $7,600, the stated redemption price at maturity of $10,000, and the ratable monthly portion of original issue discount of $20.

Example (2). Assume the facts stated in Example (1), except that A is recorded on the books of the corporation as holding the bond on June 30 and December 31, 1971. The corporation shall complete and file only one Form 1099–OID for A.

Example (3). Assume the facts stated in Example (1), except that the books of the corporation show that A held 2 of the bonds at all times in 1971. The amounts of the items listed in *(a)*(2), *(a)*(3), *(a)*(4), and *(a)*(5) of this subdivision are identical for the 2 bonds. Under *(b)*(2) of this subdivision, the corporation is permitted to treat the 2 bonds as one for purposes of completing and filing a Form 1099–OID for 1971 and aggregate the amounts being reported.

Example (4). On January 1, 1972, a corporation issued to C 3 bonds in registered form of the same issue with stated redemption prices of $1,000, $5,000, and $10,000. The aggregate amounts of original issue discount for each year, the issue prices, the stated redemption prices, and the monthly portions of original issue discount are the same for each $1,000 of stated redemption price. Thus, all relevant amounts for any one bond are proportional to such amounts for any other bond. Therefore, so long as C holds the bonds the corporation shall be permitted to aggregate on one Form 1099–OID all original issue discount with respect to such obligations in accordance with *(b)(2)* of this subdivision.

Example (5). On June 1, 1971, a corporation issues a 10-year bond to D, for which the ratable monthly portion of original issue discount is $10. For 1971, the corporation uses the record date reporting system permitted by *(b)(1)* of this subdivision. The corporation's books show that E held the bond on June 30, 1971, and that F held the bond on December 31, 1971, the dates on which the corporation pays stated interest on the bond. The corporation shall file a Form 1099–OID for both E and F showing on each form the aggregate amount of original issue discount includible for 1971 or $70 since E and F are each treated as if each held the bond every day it was outstanding and it was outstanding 7 months in 1971. As to D, the corporation is not required to file a Form 1099–OID since D did not hold the bond on either of the 2 record dates.

(iii) Every person who during a calendar year before 1983 receives payments of interest as a nominee on behalf of another person aggregating $10 or more shall make an information return on Forms 1096 and 1087 for such calendar year showing the aggregate amount of such interest, the name and address of the person on whose behalf received, the total of such interest received on behalf of all persons, and such other information as is required by the forms.

(iv) Except with respect to an obligation to which paragraph (e) or (f) of § 1.1232–3A applies (relating respectively to deposits in banks and similar financial institutions and to face-amount certificates), every person who is a nominee on behalf of the actual owner of an obligation as to which there is original issue discount aggregating $10 or more includible in the gross income of such owner during a calendar year before 1983, regardless of whether he receives a Form 1099–OID with respect to such discount, shall make an information return on Forms 1096 and 1087–OID for such calendar year showing in the manner prescribed on such forms the same information for the actual owner as is required or permitted in subdivision (ii) of this subparagraph for the record holder.

(v) Notwithstanding the provisions of subdivisions (iii) and (iv) of this subparagraph, the filing of Form 1087 or Form 1087–OID is not required if:

(a) The record owner is required to file a fiduciary return on Form 1041 disclosing the name, address, and identifying number of the actual owner;

(b) The record owner is a nominee of a banking institution or trust company exercising trust powers, and such banking institution or trust company is required to file a fiduciary return on Form 1041 disclosing the name, address, and identifying number of the actual owner; or

(c) The record owner is a banking institution or trust company exercising

trust powers, or a nominee thereof, and the actual owner is an organization exempt from taxation under section 501(a) for which such banking institution or trust company files an annual return,

but only if the name, address, and identifying number of the record owner are included on or with the Form 1041 fiduciary return filed for the estate or trust or the annual return filed for the tax exempt organization.

(vi) Every person carrying on the banking business who makes payments of interest to another person (whether or not aggregating $10 or more) during a calendar year with respect to a certificate of deposit issued in bearer form (other than such a certificate issued in an amount of $100,000 or more) shall make an information return on Forms 1096 and 1099–BCD for such calendar year. The preceding sentence applies whether such payments are made during the term of the certificate or at its redemption. The information return required by this subdivision for the calendar year shall show the following:

(*a*) The name, address, and taxpayer identification number of the person to whom the interest is paid;

(*b*) The aggregate amount of interest paid to such person during the calendar year with respect to the certificate of deposit;

(*c*) The name, address, and taxpayer identification number of the person to whom the certificate was originally issued;

(*d*) The portion of the interest with respect to the certificate reported under (*b*) that is attibutable to the current calendar year; and

(*e*) Such other information as is required by the form.

The application of this subdivision (vi) may be illustrated by the following examples:

Example (1). On June 1, 1978, X Bank issues a $1,000 bearer certificate of deposit to A. The certificate of deposit is not redeemable until May 31, 1979, and no interest is to be paid on the instrument until its redemption. On September 1, 1978. A transfers the bearer certificate to B and on May 31, 1979, B presents the certificate to X for payment and receives the $1,000 principal amount plus all the accrued interest. Under paragraph (a)(1)(vi) of this section, X is not required to make an information return for 1978 with respect to the bearer certificate of deposit because no interest is actually paid to a holder of the certificate during 1978. X is required to file an information return for 1979 with respect to the certificate, identifying B as the payee of the entire amount of the interest and A as the original purchaser of the certificate. (For rules relating to statements to be made to recipients of interest payments, see § 1.6049–3.)

Example (2). On July 1, 1978, Y Bank issues a $5,000 bearer certificate of deposit to C. The certificate of deposit is not redeemable until June 30, 1981, and no interest is to be paid on the instrument until its redemption. C holds the certificate for the entire term and on June 30, 1981, presents it to Y for payment and receives the $5,000 principal amount plus the accrued interest. Under paragraph (a)(1)(vi) of this section, Y is not required to file an information return for calendar years 1978, 1979, or 1980 with respect to this bearer certificate of deposit because no interest is acutally paid to C during those calendar years. Y is required to file an information return for 1981 with respect to the certificate identifying C as the payee of the entire amount of the interest and as the original purchaser. (Although Y is not required to file an information return for interest paid on the certificate until its redemption in 1981, C must report as income on his tax returns for 1978, 1979, 1980, and 1981 the ratable portion of such interest includible in income under section 1232.)

(2) *Definitions.* (i) The term ''person'' when used in this section does not include the United States, a State, the District of Columbia, a foreign government, a political subdivision of a State or of a foreign government, or an international organization. Therefore, interest paid by or to one of these entities need not be reported. Similarly, original issue discount in respect of an obligation issued by or to one of these entities need not be reported.

(ii) For purposes of this section, a person who receives interest shall be considered to have received it as a nominee if he is not the actual owner of such interest and if he was required under § 1.6109–1 to furnish his identifying number to the payer of the interest (or would have been so required if the total of such interest for the year had been $10 or more), and such number was (or would have been) required to be included on an information return filed by the payer with respect to the interest. However, a person shall not be considered to be a nominee as to any portion of an interest payment which is

actually owned by another person whose name is also shown on the information return filed by the payer or nominee with respect to such interest payment. Thus, in the case of a savings account jointly owned by a husband and wife, the husband will not be considered as receiving any portion of the interest on that account as a nominee for his wife if his wife's name is included on the information return filed by the payer with respect to the interest.

(iii) For purposes of this section, in the case of a person who receives a Form 1099–OID, the determination of who is considered a nominee shall be made in a manner consistent with the principles of subdivision (ii) of this subparagraph.

(iv) For purposes of this section and §1.6049–3, the term ''Form 1099–OID'' means the appropriate Form 1099 for original issue discount prescribed for the calendar year.

(3) *Determination of person to whom interest is paid or for whom it is received.* For purposes of applying the provisions of this section, the person whose identifying number is required to be included by the payer of interest on an information return with respect to such interest shall be considered the person to whom the interest is paid. In the case of interest received by a nominee on behalf of another person, the person whose identifying number is required to be included on an information return made by the nominee with respect to such interest shall be considered the person on whose behalf such interest is received by the nominee. Thus, in the case of interest made payable to a person other than the record owner of the obligation with respect to which the interest is paid, the record owner of the obligation shall be considered the person to whom the interest is paid for purposes of applying the reporting requirements of this section, since his identifying number is required to be included on the information return filed under such section by the payer of the interest. Similarly, if a stockbroker receives interest on a bond held in street name for the joint account of a husband and wife, the interest is considered as received on behalf of the husband since his identifying number should be shown on the information return filed by the nominee under this section. Thus, if the wife has a separate account with the same stockbroker, any interest received by the stockbroker for her separate account should not be aggregated with the interest received for the joint account for purposes of information reporting. For regulations relating to the use of identifying numbers, see §1.6109–1.

(4) *Determination of person by whom original issue discount is includible or for whom a Form 1099–OID showing original issue discount is received.* For purposes of applying the provisions of this section, the determination of the person by whom original issue discount is includible or for whom a Form 1099–OID is received shall be made in a manner consistent with the principles of subparagraph (3) of this paragraph.

(5) *Inclusion of other payments.* The Form 1099 filed by any person with respect to payments of interest to another person during a calendar year prior to 1972 may, at the election of the maker, include payments other than interest made by him to such other person during such year which are required to be reported on Form 1099. Similarly, the Form 1087 filed by a nominee with respect to payments of interest received by him on behalf of any other person during a calendar year prior to 1972 may include payments of dividends received by him on behalf of such person during such year which are required to be reported on Form 1087. However, except as provided in subparagraph (1)(ii) *(b)* of this paragraph, a separate Form 1087–OID or 1099–OID shall be filed for each obligation in respect of which original issue discount is required to be reported for any calendar year before 1983. In addition, any person required to report payments on both Forms 1087, 1087–OID, 1099, and 1099–OID, for any calendar year may use one Form 1096 to summarize and transmit such forms.

(b) *When payment deemed made.* For purposes of section 6049, interest is deemed to have been paid when it is credited or set apart to a person without any substantial limitation or restriction as to the time or manner of

payment or condition upon which payment is to be made, and is made available to him so that it may be drawn at any time, and its receipt brought within his own control and disposition.

(c) *Time and place for filing*—(1) *Payment of interest*. The returns required under this section for any calendar year for the payment of interest shall be filed after September 30 of such year, but not before the payer's final payment for the year, and on or before February 28 of the following year with any of the Internal Revenue Service Centers, the addresses of which are listed in the instructions for Form 1096. For extensions of time for filing returns under this section, see § 1.6081–1.

(2) *Original issue discount*. (i) The returns required under this section for any calendar year for original issue discount shall be filed after December 31 of such year and on or before February 28 of the following year with any of the Internal Revenue Service Centers, the addresses of which are listed in the instructions for Form 1096. For extensions of time for filing returns under this section, see § 1.6081–1.

(ii) The time for filing returns for the calendar year 1971 required under this section for original issue discount in respect of obligations to which paragraph (e) of § 1.1232–3A applies (relating to deposits in banks and other similar financial institutions) is extended to April 15, 1972.

(d) *Penalty*. For penalty for failure to file the statements required by this section, see § 301.6652–1 of this chapter (Regulations on Procedure and Administration).

(e) *Permission to submit information required by Form 1087 or 1099 on magnetic tape*. For rules relating to permission to submit the information required by Form 1087 or 1099 on magnetic tape or other media, see § 1.9101–1.

(Secs. 6049 (a), (b), and (d) and 7805 of the Internal Revenue Code of 1954 (96 Stat. 592, 594; 26 U.S.C. 6049 (a), (b), and (d); 68A Stat. 917, 26 U.S.C. 7805), and in sec. 309 of the Tax Equity and Fiscal Responsibility Act of 1982 (96 Stat. 591)

[T.D. 6628, 27 FR 12800, Dec. 28, 1962, as amended by T.D. 6879, 31 FR 3494, Mar. 8, 1966; T.D. 6883, 31 FR 6589, May 8, 1966; T.D. 7000, 34 FR 996, Jan. 23, 1969, T.D. 7154, 36 FR 25009, Dec. 28, 1971; 37 FR 527, Jan. 13, 1972; T.D. 7311, 39 FR 11881, Apr. 1, 1974; T.D. 7584, 44 FR 1103, Jan. 4, 1979; T.D. 7881, 48 FR 12968, Mar. 28, 1983]

§ 1.6049–2 Interest and original issue discount subject to reporting in calendar years before 1983.

(a) *Interest in general*. Except as provided in paragraph (b) of this section, the term ''interest'' when used in this section and §§ 1.6049–1 and 1.6049–3 means:

(1) Interest on evidences of indebtedness issued by a corporation in ''registered form'' (as defined in paragraph (d) of this section). The phrase ''evidences of indebtedness'' includes bond, debentures, notes, certificates and other similar instruments regardless of how denominated.

(2) Interest on deposits (except deposits evidenced by negotiable time certificates of deposit issued in an amount of $100,000 or more) paid (or credited) by persons carrying on the banking business. In the case of a certificate of deposit issued in bearer form, the term ''interest'', as used in the preceding sentence and in paragraph (a)(1)(vi) of § 1.6049–1, has the same meaning as in §1.61–7 (regardless of whether taxable to the payee in the year the information return is made).

(3) Amounts, whether or not designated as interest, paid (or credited) by mutual savings banks, savings and loan associations, building and loan associations, cooperative banks, homestead associations, credit unions, or

similar organizations in respect of deposits, face amount certificates, investment certificates, or withdrawable or repurchasable shares. Thus, even though amounts paid or credited by such organizations with respect to deposits are designated as ''dividends'', such amounts are included in the definition of interest for purposes of section 6049.

(4) Interest on amounts held by insurance companies under agreements to pay interest thereon. This includes interest paid by insurance companies with respect to policy ''dividend'' accumulations (see sections 61 and 451 and the regulations thereunder for rules as to when such interest is considered paid), and interest paid with respect to the proceeds of insurance policies left with the insurer. The so-called ''interest element'' in the case of annuity or installment payments under life insurance or endowment contracts does not constitute interest for purposes of this section.

(5) Interest on deposits with stockbrokers, bondbrokers, and other persons engaged in the business of dealing in securities.

(b) *Exceptions*. The term ''interest'' when used in section 6049 does not include:

(1) Interest on obligations described in section 103(a) (1) or (3), relating to certain governmental obligations.

(2) Any payment by:

(i) A foreign corporation,

(ii) A nonresident alien individual, or

(iii) A partnership composed in whole or in part of nonresident aliens,

if such corporation, individual, or partnership is not engaged in trade or business within the United States and does not have an office or place of business or a fiscal or paying agent in the United States.

(3) Any interest which is subject to withholding under section 1441 or 1442 (relating to withholding of tax on nonresident aliens and foreign corporations, respectively) by the person making the payment, or which would be so subject to withholding but for the provisions of a treaty, or for the fact that under section 861(a)(1) it is not from sources within the United States, or for the fact that withholding is not required by reason of paragraph (a) or (f) of § 1.1441–4.

(4) In the case of a nominee, any interest which he receives and with respect to which he is required to withhold under section 1441 or 1442, or would be so required to withhold but for the provisions of a treaty, or for the fact that under section 861(a)(1) it is not from sources within the United States, or for the fact that withholding is not required by reason of paragraph (a) or (f) of § 1.1441–4.

(5) Any amount on which the person making the payment is required to deduct and withhold a tax under section 1451 (relating to tax-free covenant bonds), or would be so required but for section 1451(d) (relating to benefit of personal exemptions).

(6) Any amount which is subject to reporting as original issue discount.

(c) *Original issue discount*—(1) *In general*. The term ''original issue discount'' when used in this section and §§ 1.6049–1 and 1.6049–3 means original issue discount subject to the ratable inclusion rules of paragraph (a) of § 1.1232–3A, determined without regard to any reduction by reason of a purchase allowance under paragraph (a)(2)(ii) of § 1.1232–3A or a purchase at a premium as defined in paragraph (d)(2) of § 1.1232–3.

(2) *Coordination with interest reporting*. In the case of an obligation issued after May 27, 1969 (other than an obligation issued pursuant to a written commitment which was binding on May 27, 1969, and at all times thereafter) and on or before December 31, 1982, original issue discount which is not subject to the reporting requirements of paragrah (a)(1)(ii) of § 1.6049–1 is interest within the meaning of pargraph (a) of this section. Original issue discount which is subject to the reporting requirements of paragraph (a)(1)(ii) of § 1.6049–1 is not interest within the meaning of paragraph (a) of this section.

(3) *Exceptions*. Reporting of original issue discount is not required in respect of an obligation which paragraph (b)(2) of this section except from interest reporting.

(d) *Definition of ''in registered form.''* For purposes of § 1.6049–1 and this section, an evidence of indebtedness is in registered form if it is registered as to

both principal and interest (or, for purposes of reporting with respect to original issue discount, if it is registered as to principal) and if its transfer must be effected by the surrender of the old instrument and either the reissuance by the corporation of the old instrument to the new holder or the issuance by the corporation of a new instrument to the new holder.

(Secs. 6049 (a), (b), and (d) and 7805 of the Internal Revenue Code of 1954 (96 Stat. 592, 594; 26 U.S.C. 6049 (a), (b), and (d); 68A Stat. 917, 26 U.S.C. 7805), and in sec. 309 of the Tax Equity and Fiscal Responsibility Act of 1982 (96 Stat. 591)

[T.D. 6628, 27 FR 12801, Dec. 28, 1962, as amended by T.D. 6908, 31 FR 16774, Dec. 31, 1966; T.D. 6966, 33 FR 11262, Aug. 8, 1968; T.D. 7154, 36 FR 25011, Dec. 28, 1971; T.D. 7584, 44 FR 1104, Jan. 4, 1979; T.D. 7881, 48 FR 12968, Mar. 28, 1983]

§ 1.6049–3 Statements to recipients of interest payments and holders of obligations to which there is attributed original issue discount in calendar years before 1983.

(a) *Requirement.* Every person filing (1) a Form 1099 or 1087 under section 6049(a)(1) and § 1.6049–1 with respect to payments of interest or (2) a Form 1099–OID or 1087–-OID with respect to original issue discount includible in gross income, shall furnish to the person whose identifying number is (or should be) shown on the form a written statement showing the information required by paragraph (b) of this section. With respect to interest, no statement is required to be furnished under section 6049(c) and this section to any person if the aggregate of the payments to (or received on behalf of) such person shown on the form would be less than $10. With respect to original issue discount, no statement is required to be furnished under section 6049(c) and this section to any person if the aggregate amount of original issue discount on the statement to such person with respect to the obligation would be less than $10. References in this section to Form 1099 shall be construed to include Form 1099–BCD, except that in applying paragraph (b)(2) of this section no information relating to the person to whom the certificate of deposit was originally issued shall be disclosed to another person to whom the payment of interest is made.

(b) *Form of statement*—(1) *In general.* The written statement required to be furnished to a person under paragraph (a) of this section shall show:

(i) With respect to payments of interest (as defined in § 1.6049–2) aggregating $10 or more to any person during a calendar year before 1983:

(a) The aggregate amount of payments shown on the Form 1099 or 1087 as having been made to (or received on behalf of) such person and a legend stating that such amount is being reported to the Internal Revenue Service, and

(b) The name and address of the person filing the form, and

(ii) With respect to original issue discount (as defined in § 1.6049–2) which would aggregate $10 or more on the statement to the holder during a calendar year after 1970 and prior to calendar year 1983:

(a) The aggregate amount or original issue discount includible by (or on behalf of) such person with respect to the obligation, as shown on Form 1099–OID or Form 1087–OID for such calendar year (determined by applying the rules of paragraph (a)(1)(ii) of § 1.6049–1 for purposes of completing either form),

(b) All other items shown on such Form 1099–OID or Form 1087–OID for such calendar year (so determined), and

(c) A legend stating that such amount and such items are being reported to the Internal Revenue Service.

(2) *Special rule.* The requirements of this section for the furnishing of a statement to any person, including the legend requirement of this paragraph, may be met by the furnishing to such person of a copy of the Form 1099, 1099–OID, 1087, or 1087–OID filed pursuant to § 1.6049–1, or a reasonable facsimile thereof, in respect of such person. However, in the case of Form 1087–OID or 1099–OID, a copy of the instructions must also be sent to such person. A statement shall be considered to be furnished to a person within the meaning of this section if it is mailed to such person at his last known address.

(c) *Time for furnishing statements*—(1) *In general*—(i) *Payment of interest.* Each statement required by this section to

be furnished to any person for a calendar year for the payment of interest shall be furnished to such person after November 30 of the year and on or before January 31 of the following year, but no statement may be furnished before the final interest payment for the calendar year has been paid. However, the statement may be furnished at any time after April 30 if it is furnished with the final interest payment for the calendar year.

(ii) *Original issue discount. (a)* Except as otherwise provided in this subdivision (ii), each statement required by this section to be furnished to any person for a calendar year for original issue discount shall be furnished to such person after December 31 of the year and on or before January 31 of the following year.

(b) The time for furnishing each statement required by this section to be furnished to any person for the calendar year 1971 for original issue discount in respect of obligations to which paragraph (e) of § 1.1232–3A applies (relating to deposits in banks and other similar financial institutions) is extended to March 15, 1972.

(c) The time for furnishing each statement required by this section to be furnished by a nominee to any person for the calendar year 1971 for original issue discount is extended to February 28, 1972.

(2) *Extensions of time.* For good cause shown upon written application of the person required to furnish statements under this section, the district director may grant an extension of time not exceeding 30 days in which to furnish such statements. The application shall be addressed to the district director with whom the income tax returns of the applicant are filed and shall contain a full recital of the reasons for requesting the extension to aid the district director in determining the period of the extension, if any, which will be granted. Such a request in the form of a letter to the district director signed by the applicant will suffice as an application. The application shall be filed on or before the date prescribed in subparagraph (1) of this paragraph for furnishing the statements required by this section.

(3) *Last day for furnishing statement.* For provisions relating to the time for performance of an act when the last day prescribed for performance falls on Saturday, Sunday, or a legal holiday, see § 301.7503–1 of this chapter (Regulations on Procedure and Administration).

(d) *Penalty.* For provisions relating to the penalty provided for failure to furnish a statement under this section see § 301.6678–1 of this chapter (Regulations on Procedure and Administration).

(Secs. 6049 (a), (b), and (d) and 7805 of the Internal Revenue Code of 1954 (96 Stat. 592, 594; 26 U.S.C. 6049 (a), (b), and (d); 68A Stat. 917, 26 U.S.C. 7805), and in sec. 309 of the Tax Equity and Fiscal Responsibility Act of 1982 (96 Stat. 591)

[T.D. 6628, 27 FR 12801, Dec. 28, 1962, as amended by T.D. 7154, 36 FR 25011, Dec. 28, 1971; 37 FR 527, Jan. 13, 1972; T.D. 7584, 44 FR 1104, Jan. 4, 1979; T.D. 7624, 44 FR 31012, May 30, 1979; T.D. 7881, 48 FR 12968, Mar. 28, 1983]

§ 1.6049–4 Return of information as to interest paid and original issue discount includible in gross income after December 31, 1982.

(a) *Requirement of reporting*—(1) *In general.* Except as provided in paragraph (c) of this section, an information return shall be made by a payor, as defined in paragraph (a)(2) of this section, of amounts of interest and original issue discount paid after December 31, 1982. Such return shall contain the information described in paragraph (b) of this section.

(2) *Payor.* A payor is a person described in paragraph (a)(2) (i) or (ii) of this section.

(i) Every person who makes a payment of the type and of the amount subject to reporting under this section (or under an applicable section under this chapter) to any other person during a calendar year; however, persons not treated as payors for purposes of § 31.3406(a)–2 of this chapter shall not be treated as payors for purposes of this paragraph (a)(2).

(ii) Every person who collects on behalf of another person payments of the type and of the amount subject to reporting under this section (or under an applicable section under this chapter), including middlemen treated as payors under § 31.3406(a)–2 of this chapter, or

who otherwise acts as a middleman (as defined in paragraph (f)(4) of this section) with respect to such payment.

(b) *Information to be reported*—(1) *Interest payments.* Except as provided in paragraphs (b) (3) and (5) of this section, in the case of interest other than original issue discount treated as interest under §1.6049–5(f), an information return on Form 1099 shall be made for the calendar year showing the aggregate amount of the payments, the name, address, and taxpayer identification number of the person to whom paid, the amount of tax deducted and withheld under section 3406 from the payments, if any, and such other information as required by the forms. An information return is generally not required if the amount of interest paid to a person aggregates less than $10 or if the payment is made to a person who is an exempt recipient described in paragraph (c)(1)(ii) of this section, unless the payor backup withholds under section 3406 on such payment (because, for example, the payee (i.e., exempt recipient) has failed to furnish a Form W–9 on request), in which case the payor must make a return under this section, unless the payor refunds the amount withheld pursuant to §31.6413(a)–3 of this chapter (Employment Tax Regulations). For reporting interest paid to a Canadian nonresident alien individual, see §1.6049–8.

(2) *Original issue discount.* Except as provided in paragraph (b)(3) and (b)(5) of this section, in the case of original issue discount, an information return on Forms 1096 and 1099 shall be made for each calendar year of any holder of an obligation as to which there is original issue discount includible in gross income aggregating $10 or more. For calendar years before 1992, semiannual record date reporting under §1.6049–1(a)(1)(ii)(*b*)(*1*) may be used, and if it is used, the original issue discount includible in gross income is determined by treating each holder as holding the obligation on every day it was outstanding during the calendar year. An information return shall be made, however, in any case in which an amount of tax is required to be deducted and withheld under section 3406. In such case, the amount required to be reported is the amount subject to withholding even if the amount of original issue discount includible in gross income is less than $10. With respect to an obligation described in §1.1232–3A (e) or (f) (relating respectively to deposits in banks and similar financial institutions and to face-amount certificates), §1.6049–1(a)(1)(ii)(*d*) and the last sentence of §1.6049–1(a)(1)(ii)(*a*)(*2*) shall apply. The information return shall show:

(i) The name, address, and taxpayer identification number of each record holder for whom an amount of original issue discount is includible in gross income;

(ii) The account, serial, or other identifying number of each obligation with respect to which a return is being made;

(iii) The aggregate amount of original issue discount includible in the gross income of each holder for the period during the calendar year for which the return is made (or, if the aggregation rules of §1.6049–1(a)(1)(ii)(*b*)(*2*) are being used, the aggregate amount or original issue discount for the period such holder held the obligations). For calendar years before 1992, semiannual record date reporting under §1.6049–1(a)(1)(ii)(*b*)(*1*) may be used, and if it is used, the original issue discount includible in gross income is determined by treating each holder as holding the obligation on every day it was outstanding during the calendar year. For purposes of this section, an obligation shall be considered to be outstanding from the date of original issue (as defined in §1.1232–3(b)(3));

(iv) The amount of tax withheld under section 3406, if any;

(v) The name and address of the person filing the return: and

(vi) Such other information as is required by the forms.

Section 1.6049–1(a)(1)(ii)(*b*)(*2*) and, for calendar years before 1992, §1.6049–1(a)(1)(ii) (*b*)(*1*), and (*c*), apply for purposes of this paragraph.

(3) *Returns made by middleman*—(i) *In general.* Except as provided in paragraph (b)(5) of this section, every person acting as a middleman (as defined in paragraph (f)(4) of this section) shall make an information return for the calendar year. In the case of interest payments (other than original issue

discount and other than interest described in §1.6049–8), the information return shall be made on Form 1099 and shall show the aggregate amount of the interest, the name, address, and taxpayer identification number of the person on whose behalf received, the amount of tax withheld under section 3406, if any, and such other information as required by the forms. In the case of original issue discount, the information return shall show the information required to be shown for the person on whose behalf received, as described in paragraph (b)(2) of this section. See §1.6049–5(f) to determine whether a middleman is required to make an information return with respect to original issue discount. A middleman shall make an information return regardless of whether the middleman receives a Form 1099. A middleman shall not be required to make an information return if the payment of interest aggregates less than $10 or if the payment is made to an exempt recipient described in paragraph (c)(1)(ii) of this section, unless the payor backup withholds under section 3406 on such payment (because, for example, the payee has failed to furnish a Form W–9 on request), in which case the payor must make a return under this section, unless the payor refunds the amount withheld pursuant to §31.6413(a)–3 of this chapter (Employment Tax Regulations).

(ii) *Forwarding of interest coupons and original issue discount obligations.* In the case of a middleman who, from within the United States, forwards an interest coupon or discount obligation on behalf of a payee for presentation, collection or payment outside the United States, the middleman shall make an information return on Form 1099 for the calendar year showing, in the case of an interest coupon, the information required under paragraph (b)(3)(i) of this section and, in the case of a discount obligation, information required under paragraph (b)(2) of this section. For purposes of this paragraph (b)(3)(ii), a middleman is considered to forward an interest coupon or discount obligation on behalf of a payee for presentation, collection or payment outside the United States if the middleman forwards the coupon or obligations outside the United States on or after the date when the payee is entitled to be paid or at an earlier date that is within 90 days of such date or if the middleman has actual knowledge that the coupon or obligation is being forwarded outside the United States for presentation, collection, or payment outside the United States. However, the transfer, although subject to information reporting under this section, is not subject to backup withholding under section 3406.

(iii) *Example.* The following example illustrates the provisions of paragraph (b)(3)(ii) of this section:

Example. Individual F, who is entitled to payment on an interest coupon, instructs an office of Bank M in the United States to forward the coupon to Bank N for collection by Bank N outside the United States. Bank M in the United States forwards the interest coupon to Bank N outside the United States. Bank M is required to make an information return for the calendar year under paragraph (b)(3)(ii) of this section showing the aggregate amount of the interest coupon forwarded, the name, address of the permanent residence, and the taxpayer identification number, if any, of Individual F and such other information as the form requires.

(4) *Returns made with respect to payments on certificates of deposit issued in bearer form.* Except as provided in paragraph (b)(5) of this section, every person carrying on the banking business who makes payments of interest to another person (whether or not aggregating $10 or more) during a calendar year with respect to a certificate of deposit issued in bearer form shall make an information return on Forms 1096 and 1099. The information return shall show the information required in §1.6049–1(a)(1)(vi) (*a*) through (*e*) inclusive and a statement as to the amount of tax withheld under section 3406, if any.

(5) *Interest payments to Canadian nonresident alien individuals*—(i) *General rule.* In the case of interest paid to a Canadian nonresident alien individual (as described in §1.6049–8(a)), the payor or middleman shall make an information return on Form 1042–S for the calendar year in which the interest is paid. The payor or middleman shall prepare and transmit Form 1042–S at the time and in the manner prescribed by section 1461 and the regulations

under that section and by the form and its accompanying instructions. See § 1.6049–6(e)(4) for furnishing a copy of the Form 1042–S to the payee. To determine whether an information return is required for original issue discount, see §§ 1.6049–5(f) and 1.6049–8(a).

(ii) *Effective date.* Paragraph (b)(5)(i) of this section shall be effective for payments made after December 31, 1996 with respect to a Form W–8 (Certificate of Foreign Status) furnished to the payor or middleman after that date.

(c) *Information returns not required*—(1) *Payment to exempt recipient*—(i) *In general.* No information return is required with respect to any payment made to an exempt recipient described in paragraph (c)(1)(ii) of this section, except to the extent otherwise provided in § 1.6049–5(d)(3) (ii) and (iii). However, if the payor backup withholds under section 3406 on such payment (because, for example, the payee has failed to furnish a Form W–9 on request), then the payor is required to make a return under this section, unless the payor refunds the amount withheld in accordance with § 31.6413(a)–3 of this chapter (Employment Tax Regulations).

(ii) *Exempt recipient defined.* The term *exempt recipient* means any person described in paragraphs (c)(1)(ii)(A) through (Q) of this section. An exempt recipient is generally exempt from information reporting without filing a certificate claiming exempt status unless the provisions of this paragraph (c)(1)(ii) require a payee to file a certificate.

A payor may, in any case, require a payee that is a U.S. person not otherwise required to file a certificate under this paragraph (c)(1)(ii) to file a certificate in order to qualify as an exempt recipient. See § 31.3406(h)–3(a)(1)(iii) and (c)(2) of this chapter for the certificate that a payee that is a U.S. person must provide when a payor requires the certificate to treat the payee as an exempt recipient under this paragraph (c)(1)(ii). A payor may treat a payee as an exempt recipient based upon a properly completed form as described in § 31.3406(h)–3(e)(2) of this chapter, its actual knowledge that the payee is a person described in this paragraph (c)(1)(ii), or the indicators described in this paragraph (c)(1)(ii).

(A) *Corporation.* A corporation, as defined in section 7701(a)(3), whether domestic or foreign, is an exempt recipient. In addition, for purposes of this paragraph (c)(1), the term *corporation* includes a partnership all of whose members are corporations described in this paragraph (c)(1), but only if the partnership files with the payor a certificate stating that each member of the partnership meets one of the requirements of paragraph (c)(1)(ii)(A) (*1*) through (*4*) of this section. Absent actual knowledge otherwise, a payor may treat a payee as a corporation (and, therefore, as an exempt recipient) if one of the requirements of paragraph (c)(1)(ii)(A) (*1*), (*2*), (*3*), or (*4*), of this section are met before a payment is made.

(*1*) The name of the payee contains an unambiguous expression of corporate status that is Incorporated, Inc., Corporation, Corp., P.C., (but not Company or Co.) or contains the term *insurance company*, *indemnity company*, *reinsurance company*, or *assurance company*, or its name indicates that it is an entity listed as a per se corporation under § 301.7701–2(b)(8)(i) of this chapter.

(*2*) The payor has on file a corporate resolution or similar document clearly indicating corporate status. For this purpose, a similar document includes a copy of Form 8832, filed by the entity to elect classification as an association under § 301.7701–3(b) of this chapter.

(*3*) The payor receives a Form W–9 which includes an EIN and a statement from the payee that it is a domestic corporation.

(*4*) The payor receives a withholding certificate described in § 1.1441–1(e)(2)(i), that includes a certification that the person whose name is on the certificate is a foreign corporation.

(B) *Tax exempt organization*—(*1*) *In general.* Any organization that is exempt from taxation under section 501(a) is an exempt recipient. A custodial account under section 403(b)(7) shall be considered an exempt recipient under this paragraph. A payor may treat an organization as an exempt recipient under this paragraph (c)(1)(ii)(B) without requiring a certificate if the organization's name is listed

in the compilation by the Commissioner of organizations for which a deduction for charitable contributions is allowed, if the name of the organization contains an unambiguous indication that it is a tax-exempt organization, or if the organization is known to the payor to be a tax-exempt organization.

(*2*) *Examples*. The application of the provisions of this paragraph (c)(1)(ii)(B) may be illustrated by the following examples:

Example 1. The following persons maintain accounts at M Bank: N College, O University, and P Church. M may treat N, O, and P as exempt recipients even though such persons have not filed an exemption certificate with M because the names of the organizations contain an unambiguous indication that they are tax exempt organizations.

Example 2. Q is listed in the current edition of Internal Revenue Service Publication 78 as an organization for which deductions are permitted for charitable contributions under section 170(c). Such listing has not been revoked by an announcement published in the Internal Revenue Bulletin (see §601.601(d)(2) of this chapter). A payor may treat Q as an exempt recipient even though Q has not filed an exemption certificate with the payor.

Example 3. Employer R maintains a section 403(b)(7) custodial account with Regulated Investment Company S on behalf of R's employees. S may treat the account as an exempt recipient even though R or its employees have not filed an exemption certificate with S.

(C) *Individual retirement plan*. An individual retirement plan as defined in section 7701(a)(37) is an exempt recipient. A payor may treat any such plan of which it is the trustee or custodian as an exempt recipient under this paragraph (c)(1) without requiring a certificate.

(D) *United States*. The United States Government and any wholly-owned agency or instrumentality thereof are exempt recipients. A payor may treat a person as an exempt recipient under this paragraph (c)(1) without requiring a certificate if the name of such person reasonably indicates it is described in this paragraph (c)(1).

(E) *State*. A State, the District of Columbia, a possession of the United States, a political subdivision of any of the foregoing, wholly-owned agency or instrumentality of any one or more of the foregoing, and a pool or partnership composed exclusively of any of the foregoing are exempt recipients. A payor may treat a person as an exempt recipient under this paragraph (c)(1) without requiring a certificate if the name of such person reasonably indicates it is described in this paragraph (c)(1) or if such person is known generally in the community to be a State, the District of Columbia, a possession of the United States or a political subdivision or a wholly-owned agency or instrumentality of any one or more of the foregoing (for example, an account held in the name of ''Town of S'' or ''County of T'' may be treated as held by an exempt recipient under this paragraph (c)(1)(ii)(E)).

(F) *Foreign government*. A foreign government, a political subdivision of a foreign government, and any wholly-owned agency or instrumentality of either of the foregoing are exempt recipients. A payor may treat a foreign government or a political subdivision thereof as an exempt recipient under this paragraph (c)(1) without requiring a certificate provided that its name reasonably indicates that it is a foreign government or provided that it is known to the payor to be a foreign government or a political subdivision thereof (for example, an account held in the name of the ''Government of V'' may be treated as held by a foreign government).

(G) *International organization*. An international organization and any wholly-owned agency or instrumentality thereof are exempt recipients. The term *international organization* shall have the meaning ascribed to it in section 7701(a)(18). A payor may treat a payee as an international organization without requiring a certificate if the payee is designated as an international organization by executive order (pursuant to 22 U.S.C. 288 through 288(f)).

(H) *Foreign central bank of issue*. A foreign central bank of issue is an exempt recipient. A foreign central bank of issue is a bank which is by law or government sanction the principal authority, other than the government itself, issuing instruments intended to circulate as currency. See §1.895–1(b)(1). A payor may treat a person as a foreign central bank of issue (and,

therefore, as an exempt recipient) without requiring a certificate provided that such person is known generally in the financial community as a foreign central bank of issue or if its name reasonably indicates that it is a foreign central bank of issue.

(I) *Securities or commodities dealer*. A dealer in securities, commodities, or notional principal contracts, that is registered as such under the laws of the United States or a State or under the laws of a foreign country is an exempt recipient. A payor may treat a dealer as an exempt recipient under this paragraph (c)(1) without requiring a certificate if the person is known generally in the investment community to be a dealer meeting the requirements set forth in this paragraph (c)(1) (for example, a registered broker-dealer or a person listed as a member firm in the most recent publication of members of the National Association of Securities Dealers, Inc.).

(J) *Real estate investment trust*. A real estate investment trust, as defined in section 856 and §1.856–1, is an exempt recipient. A payor may treat a person as a real estate investment trust (and, therefore, as an exempt recipient) without requiring a certificate if the person is known generally in the investment community as a real estate investment trust.

(K) *Entity registered under the Investment Company Act of 1940*. An entity registered at all times during the taxable year under the Investment Company Act of 1940, as amended (15 U.S.C. 80a–1), (or during such portion of the taxable year that it is in existence), is an exempt recipient. An entity that is created during the taxable year will be treated as meeting the registration requirement of the preceding sentence provided that such entity is so registered at all times during the taxable year for which such entity is in existence. A payor may treat such an entity as an exempt recipient under this paragraph (c)(1) without requiring a certificate if the entity is known generally in the investment community to meet the requirements of the preceding sentence.

(L) *Common trust fund*. A common trust fund, as defined in section 584(a), is an exempt recipient. A payor may treat the fund as an exempt recipient without requiring a certificate provided that its name reasonably indicates that it is a common trust fund or provided that it is known to the payor to be a common trust fund.

(M) *Financial institution*. A financial institution such as a bank, mutual savings bank, savings and loan association, building and loan association, cooperative bank, homestead association, credit union, industrial loan association or bank, or other similar organization, whether organized in the United States or under the laws of a foreign country is an exempt recipient. A financial institution also includes a clearing organization defined in §1.163–5(c)(2)(i)(D)(*8*) and the Bank for International Settlements. A payor may treat any person described in the preceding sentence as an exempt recipient without requiring a certificate if the person's name (including a foreign name, such as ''Banco'' or ''Banque'') reasonably indicates the payee is a financial institution described in the preceding sentence. In the case of a foreign person, a payor may also treat a person on such list as the Internal Revenue Service may publish or approve (such as in the Thomson Bank Directory or a list approved by the Federal Reserve Board).

(N) *Trust*. A trust which is exempt from tax under section 664(c) (i.e., a charitable remainder annuity trust or a charitable remainder unitrust) or is described in section 4947(a)(1) (relating to certain charitable trusts) is an exempt recipient. A payor which is a trustee of the trust may treat the trust as an exempt recipient without requiring a certificate.

(O) *Nominees or custodians*. A nominee or custodian.

(P) *Brokers*. A broker as defined in section 6045(c) and §1.6045–1(a)(1).

(Q) *Swap dealers*. A dealer in notional principal contracts as defined in §1.446–3(c)(4)(iii).

(iii) *Exempt recipient no longer exempt*. Any person who ceases to be an exempt recipient shall, no later than 10 days after such cessation, notify the payor in writing when it ceases to be an exempt recipient unless it reasonably appears that the person formerly qualifying as an exempt recipient will not

thereafter receive a reportable payment from the payor. If a payor treats a person as an exempt recipient by requiring the exempt recipient to file a certificate claiming exempt status, that person shall revoke the certificate as provided in the preceding sentence. If the exempt recipient terminates its relationship with the payor prior to the time that the notice of change in status is otherwise required, the exempt recipient is not required to notify the payor. If, however, the person who formerly qualified as an exempt recipient later reinstates the relationship with the payor, the person must, prior to receiving a reportable payment from such relationship, notify the payor that it no longer qualifies as an exempt recipient in case the payor relies upon the previous treatment.

(2) *Payments by certain middlemen.* An information return shall not be required if:

(i) The record owner is required to file a fiduciary return on Form 1041 disclosing the name, address, and taxpayer identification number of the actual owner, and furnishes Form K–1 to each actual owner containing the information required to be shown on the form, including amounts withheld under section 3406;

(ii) The record owner is a nominee of a banking institution or trust company exercising trust powers, and such banking institution or trust company is required to file a fiduciary return on Form 1041 disclosing the name, address, and identifying number of the actual owner, and furnishes Form K–1 to each actual owner containing the information required to be shown on the form, including amounts withheld under section 3406;

(iii) The record owner is a banking institution or trust company exercising trust powers, or a nominee thereof, and the actual owner is an organization exempt from taxation under section 501(a) for which such banking institution or trust company files an annual return, but only if the name, address, and taxpayer identification number of the record owner is included on or with the Form 1041 fiduciary return filed for the estate or trust or the annual return filed for the tax exempt organization.

(d) *Special rules*—(1) *Aggregation of payments.* For purposes of paragraph (b) of this section, until such time as the Commissioner determines that it is feasible to require aggregation of payments on two or more accounts, insurance contracts, or investment certificates, and, until this section is amended accordingly to provide for reporting on an aggregate basis, the requirement for filing Form 1099 under this section will be met if a person making payments of interest subject to reporting files a separate Form 1099 with respect to each account, insurance contract, or investment certificate. In the case of obligations described in section 6049(b)(1)(A), separate Forms 1099 may be filed as provided in the preceding sentence with respect to holdings in different issues.

(2) *Treatment of original issue discount.* The amount of original issue discount subject to reporting under section 6049 shall be the amount of original issue discount includible in the gross income of any holder that is treated as paid under § 1.6049–5(f).

(3) *Conversion into United States dollars of amounts paid in foreign currency*—(i) *Conversion rules.* When a payment is made in foreign currency, the U.S. dollar amount of the payment shall be determined by converting such foreign currency into U.S. dollars on the date of payment at the spot rate (as defined in § 1.988–1(d)(1)) or pursuant to a reasonable spot rate convention. For example, a withholding agent may use a month-end spot rate or a monthly average spot rate. A spot rate convention must be used consistently with respect to all non-dollar amounts withheld and from year to year. Such convention cannot be changed without the consent of the Commissioner or the Commissioner's delegate.

(ii) *Special rule for § 1.988–5(a) transactions where the payor on both components of a qualified hedging transaction is the same person*—(A) *In general.* Interest or original issue discount on a qualified debt instrument that is part of a qualified hedging transaction under § 1.988–5(a) shall be computed for section 6049 reporting purposes under the rules described in § 1.988–5(a)(9)(ii) if—

(*1*) The payor on the qualified debt instrument and the counterparty to

the § 1.988–5(a) hedge are the same person; and

(*2*) The payee complies with the requirements of § 1.988–5(a) and so notifies its payor prior to the date required for filing Form 1099 as required by this section.

(B) *Effective date*. The provisions of this paragraph (d)(3)(ii) apply to transactions entered into after December 31, 2000.

(4) *Determination of person to whom interest or original issue discount is paid or for whom it is received*. Section 1.6049–1(a)(3) and (4) shall apply with respect to payments of interest and original issue discount after December 31, 1982.

(5) *Payments by governmental units*. In the case of payments made by any governmental unit or any agency or instrumentality thereof, the officer or employee having control of the payment of interest or original issue discount (or the person appropriately designated for purposes of this section) shall make the returns and statements required under section 6049.

(6) *When payment deemed made*—(i) *In general*. Except as provided in paragraph (d)(6)(ii) of this section, for purposes of section 6049, interest is deemed to have been paid when it is credited or set apart to a person without any substantial limitation or restriction as to the time or manner of payment or condition upon which payment is to be made, and is made available to him so that it may be drawn at any time, and its receipt brought within his own control and disposition.

(ii) *Instruments paid on presentment or demand*. In the case of a payment made on an obligation described in paragraph (e)(2) of this section (relating to transactional reporting), interest is deemed to have been paid at the time the obligation is presented for payment. For example, interest represented by a coupon detached from a bond is considered paid for purposes of section 6049 when the coupon is presented for payment.

(7) *Magnetic media requirement*. For rules relating to permission to submit the information required by Form 1099 on magnetic tape or other media, see § 1.9101–1. For the requirement to submit the information required by Form 1099 on magnetic media for payments after December 31, 1983, see section 6011(e) and § 301.6011–2 of this chapter (Regulations on Procedure and Administration).

(8) *Obligations that are not exempt from taxation*. When an issuer of an obligation that is not exempt from taxation receives an envelope or ''shell'', signed by the payee, stating that interest on the obligation is exempt from taxation under section 103(a) (as described in § 1.6049–5(b)(2), the issuer shall make an information return under section 6049. The information return shall show the name, address, and taxpayer identification number of the person who signed the statement claiming that interest on the obligation is exempt from taxation, the amount of interest paid, and such other information as is required by the form. An information return is required regardless of the amount of interest. The issuer shall also furnish a written statement to such person showing the information required by § 1.6049–6(b).

(9) *Savings bonds*—(i) *In general*. A person who makes payment on a United States savings bond when the bond is presented for payment shall report the difference between the amount to be paid and the amount paid for the bond. The amount subject to reporting shall not be reduced to take into account:

(A) Amounts previously included in the income of a holder as a result of an election under section 454 to include annually the increase in the redemption price of the bond; or

(B) Amounts accrued prior to transfer of the bond where the bond has been reissued in the name of the person presenting the bond for payment.

With respect to a savings bond that is reissued in another person's name, the amount subject to reporting when the bond is reissued is the amount of interest that has accrued. With respect to a savings bond that is exchanged in a tax-deferred transaction (as described in section 1037), the amount subject to reporting is the amount of cash paid to the holder at the time of the transaction.

(ii) *Examples*. The application of the provisions of paragraph (d)(9)(i) of this section may be illustrated by the following examples:

Example (1). On June 10, 1943, A purchases a $50 Series E savings bond. The amount paid for the savings bond is $37.50. A elects under section 454 to include the increase in the redemption price of the bond annually in income. A presents the bond to Bank M to be cashed on July 1, 1983. The amount to be paid on the bond on that date is $204.96. Bank M is required to make an information return under section 6049 showing that it paid $167.46 (the difference between $204.96 and $37.50) of interest, without regard to A's election to include annually the increase in the redemption price of the bond.

Example (2). On December 1, 1970, B purchases a $500 Series E savings bond. The amount paid for the bond is $375. On August 1, 1984, the bond is reissued by the Bureau of Public Debt by deleting B's name and inserting the name of B's child. At the time of reissue, the redemption value of the bond is $1,015.80. The accrued interest is $640.80 (the difference between $1,015.80 and $375). The reissue is a taxable transaction, and B must include in income the accrued interest at the time of reissue. The Bureau of Public Debt is required to make an information return under section 6049 showing that it paid $640.80 of interest to B.

Example (3). Assume the same facts as in example (2) except that B exchanges the bond for a Series HH savings bond in the amount of $1,000 issued in B's name. The exchange is tax-deferred under section 1037. The Bureau of Public Debt stamps a legend on the bond stating that interest of $625 has been deferred. The amount of $15.80 is paid to B. The Bureau of the Public Debt must make an informatiion return showing that it paid $15.80 of interest to B.

Example (4). Assume the same facts as in example (3) except that the exchange is not a tax-deferred exchange. The Bureau of the Public Debt must make an information return showing that it paid $640.80 of interest to B.

(e) *Transactional reporting*—(1) *In general.* An information return required to be made under paragraph (b) of this section may be made on a transaction-by-transaction basis, rather than on an annual aggregation basis, if payment described in paragraph (e)(2) of this section is made by a person described in paragraph (e)(3) of this section.

(2) *Payments subject to transactional reporting.* An information return may be made on a transactional basis if payment is made on:

(i) A United States savings bond,

(ii) An interest coupon (but see § 1.6049–5(b) which provides that no information return is required to be made with respect to an interest coupon that is exempt from taxation),

(iii) A discount obligation having a maturity at issue of 1 year or less, including commercial paper and short-term government obligations defined in section 1232(a)(3), and

(iv) Any obligation similar to those described in subdivisions (i) through (iii).

The information return with respect to payments on the types of obligations described in this paragraph shall be made on Form 1099–INT. A payor may include all interest paid in one transaction on one information return, irrespective of whether obligations of different issuers are paid as part of the transaction.

(3) *Persons subject to transactional reporting.* A person may make a return on a transactional basis if the person is:

(i) A middleman (as defined in paragraph (f)(4) of this section) who is required to make an information return under paragraph (b)(3) of this section with respect to any payment described in paragraph (e)(2) of this section, or

(ii) A Federal agency making payments on a United States savings bond.

(4) *Transaction defined.* For purposes of this paragraph (e), a transaction means a payment at one time on one or more obligations. For example, if an individual who is exempt from withholding under section 3406 presents at one time five Series EE bonds on each of which $3 of interest has accrued, $15 of interest will be paid as part of the transaction. Accordingly, an information return is required under § 1.6049–4 (a)(2)(iii) because the interest paid in the transaction exceeds $10. If only three of the savings bonds were presented, however, no return would be required even if the remaining two bonds were redeemed the following day. See paragraph (a)(2)(i) of this section for the requirement that an information return be made if any amount of tax is withheld under section 3406.

(5) *Information required.* The information return for any transaction under paragraph (e) of this section shall show the following:

(i) The name, address, and taxpayer identification number of the person to whom the interest is paid;

(ii) The name and address of the person filing the form;

(iii) The amount of interest paid;

(iv) The amount of tax withheld under section 3406, if any; and

(v) Such other information as is required by the form.

(f) *Definitions*. For purposes of section 6049, this section, and §§1.6049–5 and 1.6049–6:

(1) *Person*. The term *person* includes any governmental unit, international organization, and any agency or instrumentality thereof. Therefore, interest paid by one of these entities must be reported unless one of the exceptions under section 6049 applies.

(2) *Natural person*. The term *natural person* means any individual, but shall not include a partnership (whether of not composed entirely of individuals), a trust, or an estate.

(3) *Obligation*. The term *obligation* includes bonds, debentures, notes, certificates, and other evidences of indebtedness regardless of how denominated.

(4) *Middleman*—(i) *In general*. The term *middleman* means any person. including a financial institution as described in paragraph (c)(1)(ii)(M) of this section, a broker as defined in section 6045(c), or a nominee, who makes payment of interest for, or collects interest on behalf of, another person, or otherwise acts in a capacity as intermediary between a payor and a payee. For example, a person (other than an issuer of an obligation) who makes payment on an interest coupon of the obligation to another person is a middleman, irrespective of whether such person purchases the coupon for his own account, accepts the coupon as agent for the payee, or otherwise deals with the coupon. The term ''middleman'' also includes a trustee, including a corporate trustee of a trust where the trust is the payee. See §1.6049–4(c)(2) providing that the trustee does not have to make an information return on Form 1099 to a beneficiary if the trustee is required to file Form 1041 and furnishes Form K–1 to the beneficiary showing the information required to be shown on the form, including amounts withheld under section 3406. A person shall be considered to be a middleman as to any portion of an interest payment made to such person which portion is actually owned by another person, whether or not the other person's name is also shown on the information return filed with respect to such interest payment, except that a husband or wife will not be considered as acting in the capacity of a middleman with respect to his or her spouse. A person who, from within the United States, forwards an interest coupon or discount obligation on behalf of a payee for presentation, collection or payment outside the United States is also a middleman for purposes of this section (but the transfer, although subject to information reporting under this section, does not make the payment subject to backup withholding under section 3406).

(ii) *Example*. The application of the provisions of paragraph (f)(4) of this section may be illustrated by the following example:

Example. In January, 1984, Broker B purchases on behalf of its customer, Individual A, and obligation issued by partnership RR in a public offering on that date. Broker B holds the obligation for A throughout 1984. Broker B is required to make an information return showing the amount of original issue discount treated as paid to A under §1.6049–5(f).

(g) *Time and place for filling a return for the payment of interest*—(1) *Annual return*. Except as provided in paragraph (g)(2) of this section, the returns required under this section for any calendar year for the payment of interest shall be filed after September 30 of such year, but not before the payor's final payment to the payee for the year, and on or before February 28 (March 31 if filed electronically) of the following year. Such returns shall be filed with the appropriate Internal Revenue Service Center, the address of which is listed in the instructions for Form 1096. For extensions of time for filing returns under this section, see §1.6081–1.

(2) *Transactional return*. In the case of a return under paragraph (e) of this section, relating to returns on a transactional basis, such return shall be filed at any time but in no event later than February 28 (March 31 if filed electronically) of the year following the calendar year in which the interest was paid. The return shall be filed with

the appropriate Internal Revenue Service Center, the address of which is listed in the instructions for Form 1096. For extensions of time for filing returns under this section, see § 1.6081–1.

(3) *Cross-reference to penalty*. For provisions relating to the penalty provided for failure to file timely a correct information return required under section 6049(a) and § 1.6049–4(a)(1), see § 301.6721–1 of this chapter (Procedure and Administration Regulations). See § 301.6724–1 of this chapter for the waiver of a penalty if the failure is due to reasonable cause and is not due to willful neglect.

[T.D. 7881, 48 FR 12968, Mar. 28, 1983, as amended by T.D. 8366, 56 FR 49518, Sept. 30, 1991; T.D. 8664, 61 FR 17573, Apr. 22, 1996; T.D. 8734, 62 FR 53480, Oct. 14, 1997; T.D. 8804, 63 FR 72188, Dec. 31, 1998; T.D. 8856, 64 FR 73412, Dec. 30, 1999; T.D. 8881, 65 FR 32207, 32212, May 22, 2000] T.D. 8895, 65 FR 50407, Aug. 18, 2000;

§ 1.6049–5 Interest and original issue discount subject to reporting after December 31, 1982.

(a) *Interest subject to reporting requirement*. For purposes of §§ 1.6049–4, 1.6049–6 and this section, except as provided in paragraph (b) of this section, the term ''interest'' means:

(1) Interest on an obligation:

(i) In registered form (as defined in § 5f.103–1(c)), or

(ii) Of a type offered to the public. Principles consistent with § 5f.163–1 shall be applied to determine whether an obligation is of a type offered to the public.

(2) Interest on deposits with persons carrying on the banking business. Such term shall include deposits evidenced by time certificates of deposit issued in any amount whether negotiable or nonnegotiable. The term ''interest'' includes payments to a mortgage escrow account and amounts paid with respect to repurchase agreements and banker's acceptances. Property which the payee receives from the payor as interest (or in lieu of a cash payment of interest) shall be interest for purposes of section 6049. The amount subject to reporting is the fair market value of such property.

(3) Amounts, whether or not designated as interest, paid or credited by mutual savings banks, savings and loan associations, building and loan associations, cooperative banks, homestead associations, credit unions, industrial loan associations or banks, or similar organizations, in respect of deposits, face amount certificates, investment certificates, or withdrawable or repurchasable shares. Thus, even though amounts paid or credited by such organizations with respect to deposits are designated as ''dividends'', such amounts are included in the definition of interest for purposes of section 6049. The term ''interest'' includes payments to a mortgage escrow account and amounts paid with respect to repurchase agreements. Property which the payee receives from the payor as interest (or in lieu of a cash payment of interest) is ''interest'' for purposes of section 6049. The fair market value of such property is the amount subject ot reporting.

(4) Interest on amounts held by insurance companies under an agreement to pay interest thereon. Any increment in value of ''advance premiums'', ''prepaid premiums'', or ''premium deposit funds'' which is applied to the payment of premiums due on insurance policies, or made available for withdrawal by the policyholder, shall be considered interest subject to reporting. Interest that an insurance company pays pursuant to an agreement with the policyholder to a beneficiary because he payment due has been delayed is interest subject to reporting. Interest subject to reporting also includes interest paid by insurance companies with respect to policy ''dividend'' accumulations (see sections 61 and 451 and the regulations thereunder for rules as to when such interest is considered paid), and interest paid with respect to the proceeds of insurance policies left with the insurer. The so-called ''interest element'' in the case of annuity or installment payments under life insurance or endowment contracts does not constitute interest for purposes of section 6049.

(5) Interest on deposits with brokers as defined in section 6045(c) and the regulations thereunder. Any payment made in lieu of interest to a person whose obligation has been borrowed in connection with a short sale or other similar transaction is subject to reporting under section 6049. See § 1.6045–

2T for reporting requirements with respect to payments in lieu of tax-exempt interest. See §1.6045–2 for reporting requirements with respect to payments in lieu of tax-exempt interest.

(6) Interest paid on amounts held by investment companies as defined in section 3 of the Investment Company Act of 1940 (15 U.S.C. section 80 a-3) and on amounts invested in other pooled funds or trusts. For purposes of section 6049, interest paid on amounts invested in pooled funds or trusts, such as mortgage pass-through certificates or mortgage participation certificates, shall be considered to be the interest paid as stated on the certificate, and shall not be the interest on any notes or obligations underlying such certificates. See §1.6049–4(c)(2) providing that in the case of interest paid on amounts invested in such pooled funds or trusts, the reporting requirements of section 6049 shall be considered satisfied if the issuer files Form 1041 as the fiduciary of a grantor trust and furnishes Form K–1 to each beneficiary, containing the information required by the form, including amounts withheld under section 3406.

(b) *Interest excluded from reporting requirement*. The term *interest* or *original issue discount* (OID) does not include—

(1) Interest on any obligation issued by a natural person as defined in §1.6049–4(f)(2), irrespective of whether such interest is collected on behalf of the holder of the obligation by a middleman.

(2) Interest on any obligation if such interest is exempt from taxation under section 103(a), relating to certain governmental obligations, or interest which is exempt from taxation under any other provision of law without regard to the identity of the holder. The holder of a tax exempt obligation that is not in registered form must provide written certification to the payor (other than the issuer of the obligation) that the obligation is exempt from taxation.A statement that interest coupons are tax exempt on the envelope or shell commonly used by financial institutions to process such coupons, signed by the payee, will be sufficient for this purpose if the envelope is properly completed (i.e., shows the name, address, and taxpayer identification number of the payee). A payor may rely on such written certification in treating such interest as tax exempt for purposes of section 6049. See §1.6049–4(d)(8) with respect to the requirement that the issuer of a taxable obligation shall make an information return if such issuer receives an envelope which improperly claims that the interest coupons contained therein are tax exempt.

(3) Interest on amounts held in escrow to guarantee performance on a contract or to provide security. However, interest on amounts held in escrow with a person described in paragraph (a)(2) or (3) of this section is interest subject to reporting under section 6049.

(4) Interest that a governmental unit pays with respect to tax refunds.

(5) Interest on deposits for security, such as deposits posted with a public utility company. However, interest on deposits posted for security with a person described in paragraph (a)(2) or (3) of this section is interest subject to reporting under section 6049.

(6) Amounts from sources outside the United States (determined under the provisions of part I, subchapter N, chapter 1 of the Internal Revenue Code (Code) and the regulations under those provisions) paid outside the United States by a non-U.S. payor or a non-U.S. middleman (as defined in paragraph (c)(5) of this section). See paragraph (e) of this section for circumstances in which a payment is considered to be made outside the United States.

(7) Portfolio interest, as defined in §1.871–14(b)(1), paid with respect to obligations in bearer form described in section 871(h)(2)(A) or 881(c)(2)(A) or with respect to a foreign-targeted registered obligation described in §1.871–14(e)(2) for which the documentation requirements described in §1.871–14(e)(3) and (4) have been satisfied (other than by a U.S. middleman (as defined in paragraph (c)(5) of this section) that, as a custodian or nominee of the payee, collects the amount for, or on behalf of, the payee, regardless of whether the middleman is also acting as agent of the payor).

(8) Portfolio interest described in §1.871–14(c)(1)(ii), paid with respect to

obligations in registered form described in section 871(h)(2)(B) or 881(c)(2)(B) that is not described in paragraph (b)(7) of this section.

(9) Any amount paid by an international organization described in §1.6049–4(c)(1)(ii)(G) (or its paying, transfer, or other agent that is not also a payee's agent) with respect to an obligation of which the international organization is the issuer.

(10)(i) Amounts paid outside the United States (other than by a U.S. middleman (as defined in paragraph (c)(5) of this section) that, as a custodian or nominee or other agent of the payee, collects the amount for, or on behalf of, the payee, regardless of whether the middleman is also acting as agent of the payor) with respect to an obligation that: Has a face amount or principal amount of not less than $500,000 (as determined based on the spot rate on the date of issuance if in foreign currency); has a maturity (at issue) of 183 days or less; satisfies the requirements of sections 163(f)(2)(B)(i) and (ii)(I) and the regulations thereunder (as if the obligation would otherwise be a registration-required obligation within the meaning of section 163(f)(2)(A)) (however, an original issue discount obligation with a maturity of 183 days or less from the date of issuance is not required to satisfy the certification requirement of §1.163–5(c)(2)(i)(D)(*3*)) and is issued in accordance with the procedures of §1.163–5(c)(2)(i)(D); and has on its face the following statement (or a similar statement having the same effect):

By accepting this obligation, the holder represents and warrants that it is not a United States person (other than an exempt recipient described in section 6049(b)(4) of the Internal Revenue Code and regulations thereunder) and that it is not acting for or on behalf of a United States person (other than an exempt recipient described in section 6049(b)(4) of the Internal Revenue Code and the regulations thereunder).

(ii) If the obligation is in registered form, it must be registered in the name of an exempt recipient described in §1.6049–4(c)(1)(ii). For purposes of this paragraph (b)(10), a middleman may treat an obligation as described in section 163(f)(2)(B)(i) and (ii)(I) and the regulations under that section if the obligation, or coupons detached therefrom, whichever is presented for payment, contains the statement described in this paragraph (b)(10). The exemption from reporting described in this paragraph (b)(10) shall not apply if the payor has actual knowledge that the payee is a U.S. person who is not an exempt recipient.

(11) Amounts paid with respect to an account or deposit with a U.S. or foreign branch of a domestic or foreign corporation or partnership that is paid with respect to an obligation described in either paragraph (b)(11)(i) or (ii) of this section, if the branch is engaged in the commercial banking business; and the interest or OID is paid outside the United States (other than by a U.S. middleman (as defined in paragraph (c)(5) of this section) that acts as a custodian, nominee, or other agent of the payee, and collects the amount for, or on behalf of, the payee, regardless of whether the middleman is also acting as agent of the payor). The exemption from reporting described in this paragraph (b)(11) shall not apply if the payor has actual knowledge that the payee is a U.S. person who is not an exempt recipient.

(i) An obligation is described in this paragraph (b)(11)(i) if it is not in registered form (within the meaning of section 163(f) and the regulations under that section), is described in section 163(f)(2)(B) and issued in accordance with the procedures of §1.163–5(c)(2)(i)(C) or (D), and, in the case of a U.S. branch, is part of a larger single public offering of securities. For purposes of this paragraph (b)(11)(i), a middleman may treat an obligation as described in section 163(f)(2)(B) if the obligation, and any detachable coupons, contains the statement described in section 163(f)(2)(B)(ii)(II) and the regulations under that section.

(ii)(A) An obligation is described in this paragraph (b)(11)(ii) if it produces income described in section 871(i)(2)(A); has a face amount or principal amount of not less than $500,000 (as determined based on the spot rate on the date of issuance if in foreign currency); satisfies the requirements of sections 163(f)(2)(B)(i) and (ii)(I) and the regulations thereunder (as if the obligation

would otherwise be a registration-required obligation within the meaning of section 163(f)(2)(A)) and is issued in accordance with the procedures of §1.163–5(c)(2)(i) (C) or (D) (however, an original issue discount obligation with a maturity of 183 days or less from the date of issuance is not required to satisfy the certification requirement of §1.163–5(c)(2)(i)(D)(3)). For purposes of this paragraph (b)(11)(ii), a middleman may treat an obligation as described in sections 163(f)(2)(b) (i) and (ii) and the regulations under that section if the obligation, or any detachable coupon, contains the statement described in paragraph (b)(11)(ii)(b) of this section.

(B) The obligation must have on its face, and on any detachable coupons, the following statement (or a similar statement having the same effect):

By accepting this obligation, the holder represents and warrants that it is not a United States person (other than an exempt recipient described in section 6049(b)(4) and regulations under that section) and that it is not acting for or on behalf of a United States person (other than an exempt recipient described in section 6049(b)(4) and the regulations under that section).

(C) If the obligation is in registered form, it must be registered in the name of an exempt recipient described in §1.6049–4(c)(1)(ii).

(12) Payments that a payor can, prior to payment, reliably associate with documentation upon which it may rely to treat the payment as made to a foreign beneficial owner in accordance with §1.1441–1(e)(1)(ii) or as made to a foreign payee in accordance with paragraph (d)(1) of this section or presumed to be made to a foreign payee under paragraph (d)(2) or (3) of this section. However, such payments may be reportable under §1.1461–1 (b) and (c). The provisions of §1.1441–1 shall apply by substituting the term *payor* for the term *withholding agent* and without regard to the fact that the provisions apply only to amounts subject to withholding under chapter 3 of the Code. In the event of a conflict between the provisions of §1.1441–1 and paragraph (d) of this section in determining the foreign status of the payee, the provisions of §1.1441–1 shall govern for payments of amounts subject to withholding under chapter 3 of the Code and the provisions of paragraph (d) of this section shall govern in other cases. This paragraph (b)(12) does not apply to interest paid to a Canadian nonresident alien individual as provided in §1.6049–8.

(13) Amounts for the period that the debt obligation with respect to which the interest arises represents an asset blocked as described in §1.1441–2(e)(3). Payment of such amounts, including interest that is past due and OID on obligations that mature on or before the date that the assets are no longer blocked, is deemed to occur in accordance with the rules of §1.1441–2(e)(3).

(14) Payments made by a foreign intermediary described in §1.1441–1(e)(3)(i) of amounts that it has received in its capacity as an intermediary and that are associated with a valid withholding certificate described in §1.1441–1(e)(3)(ii) or (iii) and payments made by a U.S. branch of a foreign bank or of a foreign insurance company described in §1.1441–1(b)(2)(iv) (other than a U.S. branch that is treated as a U.S. person) that are associated with a valid withholding certificate described in §1.1441–1(e)(3)(v), which certificate the intermediary or branch has furnished to the payor or middleman from whom it has received the payment, unless, and to the extent, the intermediary or branch knows that the payments are required to be reported under §1.6049–4 and were not so reported. For example, if a foreign intermediary or U.S. branch described in §1.1441–1(b)(2)(iv) fails to provide information regarding U.S. persons that are not exempt from reporting under §1.6049–4(c)(1)(ii) to the person from whom the intermediary or U.S. branch receives the payment, the amount paid by the foreign intermediary or U.S. branch to such person is interest or original issue discount. The exception of this paragraph (b)(14) shall not apply to a qualified intermediary that assumes reporting responsibility under chapter 61 of the Internal Revenue Code.

(15) Amounts of interest as determined under the provisions of §1.446–3(g)(4) (dealing with interest in the

case of a significant non-periodic payment with respect to a notional principal contract). Such amounts are governed by the provisions of section 6041. See § 1.6041–1(d)(5).

(c) *Applicable rules*—(1) *Documentary evidence for offshore accounts.* A payor may rely on documentary evidence described in this paragraph (c)(1) instead of a beneficial owner withholding certificate described in § 1.1441–1(e)(2)(i) in the case of a payment made outside the United States to an offshore account or, in the case of broker proceeds described in § 1.6045–1(c)(2), in the case of a sale effected outside the United States (as defined in § 1.6045–1(g)(3)(iii)(A)). For purposes of this paragraph (c)(1), an offshore account means an account maintained at an office or branch of a U.S. or foreign bank or other financial institution at any location outside the United States (i.e., other than in any of the fifty States or the District of Columbia) and outside of U.S. possessions. Thus, for example, an account maintained in a foreign country at a branch of a U.S. bank or of a foreign subsidiary of a U.S. bank is an offshore account.For the definition of a payment made outside the United States, see paragraph (e) of this section. A payor may rely on documentary evidence if the payor has established procedures to obtain, review, and maintain documentary evidence sufficient to establish the identity of the payee and the status of that person as a foreign person (including, but not limited to, documentary evidence described in § 1.1441–6(c) (3) or (4)); and the payor obtains, reviews, and maintains such documentary evidence in accordance with those procedures. A payor maintains the documents reviewed by retaining the original, certified copy, or a photocopy (or microfiche or similar means of record retention) of the documents reviewed and noting in its records the date on which and by whom the document was received and reviewed. Documentary evidence furnished for the payment of an amount subject to withholding under chapter 3 of the Code must contain all of the information that is necessary to complete a Form 1042–S for that payment. A payor may also rely on documentary evidence associated with a flow-through withholding certificate for payments treated as made to foreign partners of a nonwithholding foreign partnership, as defined in § 1.1441–1(c)(28), the foreign beneficiaries of a foreign simple trust, as defined in § 1.1441–1(c)(24), or foreign owners of a foreign grantor trust, as defined in § 1.1441–1(c)(26), even though the partnership or trust account is maintained in the United States.

(2) *Other applicable rules.* The provisions of § 1.1441–1(e)(4)(i) through (ix) (regarding who may sign a certificate, validity period of certificates, retention of certificates, etc.) shall apply (by substituting the term *payor* for the term *withholding agent* and disregarding the fact that the provisions under § 1.1441–1(e)(4) only apply to amounts subject to withholding under chapter 3 of the Code) to withholding certificates and documentary evidence furnished for purposes of this section. See § 1.1441–1(b)(2)(vii) for provisions dealing reliable association of a payment with documentation.

(3) *Standards of knowledge.* A payor may not rely on a withholding certificate or documentary evidence described in paragraph (c)(1) or (4) of this section if it has actual knowledge or reason to know that any information or certification stated in the certificate or documentary evidence is unreliable. A payor has reason to know that information or certifications are unreliable only if the payor would have reason to know under the provisions of § 1.1441–7(b)(2)(ii) and (3) that the information and certifications provided on the certificate or in the documentary evidence are unreliable or, in the case of a Form W–9 (or an acceptable substitute), it cannot reasonably rely on the documentation as set forth in § 31.3406(h)–3(e) of this chapter (see the information and certification described in § 31.3406(h)–3(e)(2)(i) through (iv) of this chapter that are required in order for a payor reasonably to rely on a Form W–9). The provisions of § 1.1441–7(b)(2)(ii) and (3) shall apply for purposes of this paragraph (c)(3) irrespective of the type of income to which § 1.1441–7(b)(2)(ii) is otherwise limited. The exemptions from reporting described in paragraphs (b)(10) and (11) of this section shall not apply if the payor

has actual knowledge that the payee is a U.S. person who is not an exempt recipient.

(4) *Special documentation rules for certain payments.* This paragraph (c)(4) modifies the provisions of paragraph (c)(1) of this section for payments to offshore accounts maintained at a bank or other financial institution of amounts that are not subject to withholding under chapter 3 of the Internal Revenue Code, other than amounts described in paragraph (d)(3)(iii) of this section (dealing with U.S. short-term OID and U.S. bank deposit interest). Amounts are not subject to withholding under chapter 3 of the Internal Revenue Code if they are not included in the definition of amounts subject to withholding under §1.1441–2(a) (e.g., deposit interest with foreign branches of U.S. banks, foreign source income, or broker proceeds).

(i) *Special rule when non-renewable documentary evidence is customary.* If it is customary in the country in which a branch or office of a bank or other financial institution is located to obtain documentary evidence described in paragraph (c)(1) of this section, but it is not customary for such documentary evidence to be renewed, then a payor may, in lieu of obtaining a withholding certificate, request such documentary evidence for an account maintained at such branch or office. The bank or other financial institution may rely on such documentary evidence to treat a person as a foreign person without renewing such documentary evidence in accordance with paragraph (c)(2) of this section and §1.1441–1(e)(4)(ii) if it may rely on the documentary evidence as sufficient to establish the person's foreign status under §1.1441–7(b)(7) and (8). If, however, the bank or other financial institution may, under §1.1441–7(b)(8) treat a payee as a foreign person even though it has a residence or mailing address for the payee in the United States, or has standing instructions to pay amounts from its account to an address in the United States or an account maintained in the United States, then the payor shall rely on the documentary evidence only for a period of three full calendar years after the calendar year in which the documentary evidence is provided to the payor or, if earlier, until the payor is aware of a change of circumstances that affects the validity of the documentation as establishing the payee's status as a foreign person.

(ii) *Statement in lieu of documentary evidence.* If under the local laws, regulations, or practices applicable to a type of account or transaction it is not customary to obtain documentary evidence described in paragraph (c)(1) of this section, the bank or other financial institution may, instead of obtaining a beneficial owner withholding certificate described in §1.1441–1(e)(2)(i) or documentary evidence described in paragraph (c)(1) of this section, establish a payee's foreign status based on the statement described in this paragraph (4)(ii) (or such substitute statement as the Internal Revenue Service may prescribe) made on an account opening form. The statement shall be valid only if the mailing and residence addresses of the payee are outside the United States and there are no other indicia of U.S. status. If reliance is not permitted because there are indicia of U.S. status then the payor must obtain either documentary evidence described in paragraph (c)(1) of this section or a Form W–8 described in §1.1441–1(e)(2)(i) to treat the customer as a foreign payee. In such a case, the form or documentary evidence must be renewed every three years in accordance with the renewal procedures set forth in §1.1441–1(e)(4)(ii)(A) for as long as indicia of U.S. status continue to be present. The statement referred to in this paragraph (c)(4)(i) of this section must appear near the signature line and must read as follows:

> By opening this account and signing below, the account owner represents and warrants that he/she/it is not a U.S. person for purposes of U.S. Federal income tax and that he/she/it is not acting for, or on behalf of, a U.S. person. A false statement or misrepresentation of tax status by a U.S. person could lead to penalties under U.S. law. If your tax status changes and you become a U.S. citizen or a resident, you must notify us within 30 days.

(iii) *Continuous validity of declaration of foreign status subject to due diligence by financial institution.* A declaration of foreign status described in paragraph (c)(4)(ii) of this section does not expire

unless the bank or financial institution becomes aware of circumstances indicating that the customer may be a U.S. person.

(iv) *Exception for existing accounts.* The rules of paragraphs (c)(4)(i) and (iii) of this section shall apply to accounts opened on or after January 1, 2001. For accounts opened before 2001, a bank or other financial institution may rely on the rules contained in §§35a.9999–3(ii) Q&A 34 and 35a.9999–4T Q&A 1 and 5 of this chapter in effect prior to January 1, 2001 (see 26 CFR Parts 30–39 revised as of April 1, 2000).

(5) *U.S. payor, U.S. middleman, non-U.S. payor, and non-U.S. middleman.* The terms *payor* and *middleman* have the meanings ascribed to them under §1.6049–4(a). A *non-U.S. payor* or *non-U.S. middleman* means a payor or middleman other than a U.S. payor or U.S. middleman. The term *U.S. payor* or *U.S. middleman* means—

(i) A person described in section 7701(a)(30) (including a foreign branch or office of such person);

(ii) The government of the United States or the government of any State or political subdivision thereof (or any agency or instrumentality of any of the foregoing);

(iii) A controlled foreign corporation within the meaning of section 957(a);

(iv) A foreign partnership, if at any time during its tax year, one or more of its partners are U.S. persons (as defined in §1.1441–1(c)(2)) who, in the aggregate hold more than 50 percent of the income or capital interest in the partnership or if, at any time during its tax year, it is engaged in the conduct of a trade or business in the United States;

(v) A foreign person 50 percent or more of the gross income of which, from all sources for the three-year period ending with the close of its taxable year preceding the collection or payment (or such part of such period as the person has been in existence), was effectively connected with the conduct of trade or business within the United States; or

(vi) A U.S. branch of a foreign bank or a foreign insurance company described in §1.1441–1(b)(2)(iv).

(6) *Examples.* The following examples illustrate the provisions of paragraphs (b) and (c) of this section:

Example 1. FC is a foreign corporation that is not engaged in a trade or business in the United States during the current calendar year. D, an individual who is a resident and citizen of the United States, holds a registered obligation issued by FC in a public offering. Interest is paid on the obligation within the United States by DC, a U.S. corporation that is the designated paying agent of FC. D does not have an account with DC. Although interest paid on the obligation issued by FC is foreign source, the interest paid by DC to D is considered to be interest for purposes of information reporting under section 6049 because it is paid in the United States.

Example 2. The facts are the same as in *Example 1* except that D is a nonresident alien individual who has furnished DC with a Form W–8 in accordance with the provisions of §1.1441–1(e)(1)(ii). By reason of paragraph (b)(12) of this section, the payment of interest by DC to D is not considered to be a payment of interest for purposes of information reporting under section 6049. Therefore, DC is not required to make an information return under section 6049.

Example 3. The facts are the same as in *Example 2* except that the obligation of FC is held in a custodial account for D by FB, a foreign branch of a U.S. financial institution. By reason of paragraph (c)(5) of this section, FB is considered to be a U.S. middleman. Therefore, FB is required to make an information return unless FB may treat D as a beneficial owner that is a foreign person in accordance with the provisions of §1.1441–1(e)(1)(ii).

Example 4. The facts are the same as in *Example 3* except that the FC obligation is held for D by NC, in a custodial account at NC's foreign branch. NC is a foreign corporation that is a non-U.S. middleman described in paragraph (c)(5) of this section. Under paragraph (b)(6) of this section, the payment by NC to D is not considered to be a payment of interest for purposes of section 6049. Therefore, NC is not required to make an information return under section 6049 with respect to the payment.

(d) *Determination of status as U.S. or foreign payee and applicable presumptions in the absence of documentation*—(1) *Identifying the payee.* The provisions of §§1.1441–1(b)(2), 1.1441–5(c)(1), (e)(2) and (3) shall apply (by applying the term *payor* instead of the term *withholding agent*) to identify the payee for purposes of this section (and other sections of the regulations under this chapter to which this paragraph (d)(1)

applies), except to the extent provided in this paragraph (d)(1) in the case of a payment of amounts that are not subject to withholding under chapter 3 of the Internal Revenue Code. Amounts are not subject to withholding under chapter 3 of the Code if they are not included in the definition of amounts subject to withholding under §1.1441–2(a) (e.g., deposit interest with foreign branches of U.S. banks, foreign source income, or broker proceeds). The exceptions to the application of §1.1441–1(b)(2) to amounts that are not subject to withholding under chapter 3 of the Code are as follows:

(i) The provisions of §1.1441–1(b)(2)(ii), dealing with payments to a U.S. agent of a foreign person, shall not apply. Thus, a payment to a U.S. agent of a foreign person is treated as a payment to a U.S. payee.

(ii) Payments to U.S. branches of certain banks or insurance companies described in §1.1441–1(b)(2)(iv) shall be treated as payments to a foreign payee, irrespective of the fact that the U.S. branch may have arranged with the payor to be treated as a U.S. person for payments of amounts subject to withholding and irrespective of the fact that the branch is treated as a U.S. payor for purposes of paragraph (c)(5) of this section.

(2) *Presumptions of U.S. or foreign status in the absence of documentation*—(i) *In general.* Except as otherwise provided in this paragraph (d)(2)(i), for purposes of this section (and other sections of regulations under this chapter to which this paragraph (d)(2) applies), the provisions of §1.1441–1(b)(3)(i) through (ix) and §1.1441–5(d) and (e)(6) shall apply (by applying the term *payor* instead of the term *withholding agent*) to determine the classification (e.g., individual, corporation, partnership, trust), status (i.e., a U.S. or a foreign person), and other relevant characteristics (e.g., beneficial owner or intermediary) of a payee if a payment cannot be reliably associated with valid documentation under §1.1441–1(b)(2)(vii) irrespective of whether the payments are subject to withholding under chapter 3 of the Internal Revenue Code. The provisions of §1.1441–1(b)(3)(iii)(D) and (vii)(B) shall not apply, however, to payments to amounts that are not subject to withholding. The rules of §1.1441–1(b)(2)(vii) shall apply for purposes of determining when a payment can reliably be associated with documentation, by applying the term *payor* instead of the term *withholding agent*. For this purpose, the documentary evidence or statement described in paragraph (c)(4) of this section can be treated as documentation with which a payment can be associated.

(ii) *Grace period in the case of indicia of a foreign payee.* When the conditions of this paragraph (d)(2)(ii) are satisfied, the 30-day grace period provisions under section 3406(e) shall not apply and the provisions of this paragraph (d)(2)(ii) shall apply instead. A payor that, at any time during the grace period described in this paragraph (d)(2)(ii), credits an account with payments described in §1.1441–6(c)(2) (or credits an account with broker proceeds from securities described in §1.1441–6(c)(2)), that are reportable under sections 6042, 6045, 6049, or 6050N may, instead of treating the account as owned by a U.S. person and applying backup withholding under section 3406, if applicable, choose to treat the account as owned by a foreign person if, at the beginning of the grace period, the address that the payor has in its records for the account holder is in a foreign country, the payor has been furnished the information contained in a withholding certificate described in §1.1441–1(e)(2)(i) or (3)(i) (by way of a facsimile copy of the certificate or other non-qualified electronic transmission of the information required to be stated on the certificate), or the payor holds a withholding certificate that is no longer reliable other than because the validity period as described in §1.1441–1(e)(4)(ii)(A) has expired. In the case of a newly opened account, the grace period begins on the date that the payor first credits the account.

In the case of an existing account for which the payor holds a Form W–8 or documentary evidence of foreign status, the grace period begins on the date that the payor first credits the account after the existing documentation held with regard to the account can no

longer be relied upon (other than because the validity period described in §1.1441–1(e)(4)(ii)(A) has expired). A new account shall be treated as an existing account if the account holder already holds an account at the branch location at which the new account is opened. It shall also be treated as an existing account if an account is held at another branch location if the institution maintains a coordinated account information system described in §1.1441–1(e)(4)(ix). The grace period terminates on the earlier of the close of the 90th day from the date on which the grace period begins or the date that the documentation is provided. The grace period also terminates when the remaining balance in the account (due to withdrawals or otherwise) is equal to or less than 31 percent of the total amounts credited since the beginning of the grace period that would be subject to backup withholding if the provisions of this paragraph (d)(2)(ii) did not apply. At the end of the grace period, the payor shall treat the amounts credited to the account during the grace period as paid to a U.S. or foreign payee depending upon whether documentation has been furnished and the nature of any such documentation furnished upon which the payor may rely to treat the account as owned by a U.S. or foreign payee. If the documentation has not been received on or before the date of expiration of the grace period, the payor may also apply the presumptions described in this paragraph (d) to amounts credited to the account after the date on which the grace period expires (until such time as the payor can reliably associate the documentation with amounts credited). See §31.6413(a)–3(a)(1)(iv) of this chapter for treating backup withheld amounts under section 3406 as erroneously withheld when the documentation establishing foreign status is furnished prior to the end of the calendar year in which backup withholding occurs. If the provisions of this paragraph (d)(2)(ii) apply, the provisions of §31.3406(d)–3 of this chapter shall not apply. For purposes of this paragraph (d)(2)(ii), an account holder's reinvestment of gross proceeds of a sale into other instruments constitutes a withdrawal and a non-qualified electronic transmission of information on a withholding certificate is a transmission that is not in accordance with the provisions of §1.1441–1(e)(4)(iv). See §1.1092(d)–1 for a definition of the term *actively traded* for purposes of this paragraph (d)(2)(ii).

(iii) *Joint owners*. Amounts paid to accounts held jointly for which a certificate or documentation is required as a condition for being exempt from reporting under paragraph (b) of this section are presumed made to U.S. payees who are not exempt recipients if, prior to payment, the payor cannot reliably associate the payment either with a Form W–9 furnished by one of the joint owners in the manner required in §§31.3406(d)–1 through 31.3406(d)-5 of this chapter, or with documentation described in paragraph (b)(12) of this section furnished by each joint owner upon which it can rely to treat each joint owner as a foreign payee or foreign beneficial owner. For purposes of applying this paragraph (d)(2)(iii), the grace period described in paragraph (d)(2)(ii) of this section shall apply only if each payee qualifies for such grace period.

(3) *Payments to foreign intermediaries or flow-through entities*—(i) *Payments of amounts subject to withholding under chapter 3 of the Internal Revenue Code*. In the case of payments of amounts that the payor may treat as made to a foreign intermediary or flow-through entity in accordance with §§1.1441–1(b)(3)(ii)(C) and (b)(3)(v)(A), 1.1441–5(c) or (e) and that are subject to withholding under §1.1441–2(a), the provisions of §§1.1441-1(b)(2)(v) and 1.1441–5(c)(1), (e)(2), and (3) shall apply (by applying the term *payor* instead of the term *withholding agent*) to identify the payee. If a payment of an amount subject to withholding cannot be reliably associated with valid documentation from a payee in accordance with §1.1441–1(b)(2)(vii) the presumption rules of §1.1441–1(b)(3)(v) and §1.1441–5(d) and (e)(6) shall apply to determine the payee's status for purposes of this section (and other sections of regulations under this chapter to which this paragraph (d)(3) applies).

(ii) *Payments of amounts not subject to withholding under chapter 3 of the Internal Revenue Code*. Except as provided in

paragraph (d)(3)(iii) of this section, amounts that are not subject to withholding under chapter 3 of the Internal Revenue Code that the payor may treat as paid to a foreign intermediary or flow-through entity shall be treated as made to an exempt recipient described in § 1.6049–4(c) except to the extent that the payor has actual knowledge that any person for whom the intermediary or flow-through entity is collecting the payment is a U.S. person who is not an exempt recipient. In the case of such actual knowledge, the payor shall treat the payment that it knows is allocable to such U.S. person as a payment to a U.S. payee who is not an exempt recipient and has actual knowledge of the amount allocable to such a person.

(iii) *Special rule for payments of certain short-term original issue discount and bank deposit interest*—(A) *General rule.* A payment of U.S. source deposit interest described in section 871(i)(2)(A) or 881(d)(3) or interest or original issue discount on the redemption of an obligation with a maturity from the date of issue of 183 days or less (short-term OID) described in section 871(g)(1)(B) or 881(e) that the payor may treat as paid to a foreign intermediary or flow-through entity in accordance with the provisions of § 1.1441-1(b)(3)(ii)(C), (v)(A), § 1.1441–5(d) or (e), shall be treated as paid to an undocumented U.S. payee that is not an exempt recipient under paragraph § 1.6049–4(c) unless the payor has documentation from the payees of the payment and the payment is allocated to foreign payees, as a group, and to each U.S. non-exempt recipient payee. See § 1.1441–1(e)(3)(iv)(C)(*2*).

(B) *Payee may be an intermediary.* If a payment is made to a person described in § 1.6049–4(c)(1)(ii) that has not provided an intermediary withholding certificate under § 1.1441–1(e)(3)(i) but the payor knows or has reason to know that the payee may be an intermediary, the payor must apply the rules of paragraph (d)(3)(iii)(A) of this section. A payor has reason to know that such a person may be an intermediary if that person has provided documentation as an intermediary for another account with the same payor.

(iv) *Short-term deposits and repurchase transactions.* The provisions of paragraph (d)(3)(ii) of this section and not paragraph (d)(3)(iii) of this section shall apply to deposits with banks and other financial institutions that remain on deposit for a period of two weeks or less, to amounts of original issue discount arising from a sale and repurchase transaction that is completed within a period of two weeks or less, or to amounts described in paragraphs (b)(7), (10) and (11) of this section (relating to certain obligations issued in bearer form).

(4) *Examples.* The rules of paragraphs (d)(1) through (3) of this section are illustrated by the following examples:

Example 1. (i) *Facts.* USP is a U.S. payor as defined in paragraph (c)(5) of this section. USP pays interest from sources within the United States to an account maintained in the United States by X. The interest is not deposit interest described in sections 871(i)(2)(A) or 881(d). USP does not have a withholding certificate from X as defined in § 1.1441–1(c)(16). Moreover, USP cannot treat X as an exempt recipient, as defined in § 1.6049–4(c)(1)(ii), without documentation and there is no indication that X is an individual, trust, or estate.

(ii) *Analysis.* The U.S. source interest is an amount subject to withholding as defined in § 1.1441–2(a). Under paragraph (d)(1) of this section, USP must apply the provisions of §§ 1.1441–1(b)(2) and 1.1441–5(c) and (e) to determine the payee of the interest. Under § 1.1441–1(b)(2)(i), X, the person to whom the payment is made, is considered to be the payee, unless X is determined to be a flow-through entity, in which case the rules of § 1.1441–5 apply to determine the payee. Under paragraph (d)(2)(i) of this section, the rules of § 1.1441–1(b)(3)(ii) apply to determine the classification of a payee as an individual, trust, estate, corporation, or partnership. Under § 1.1441–1(b)(3)(ii)(B), X is presumed to be a partnership, since X does not appear to be an individual, trust or estate, and X cannot be presumed to be an exempt recipient in the absence of documentation. Paragraph (d)(2)(i) of this section requires USP to apply the provisions of §§ 1.1441–1(b)(3)(iii) and 1.1441–5(d) to determine whether X is presumed to be a U.S. or foreign partnership. Under §§ 1.1441–1(b)(3)(iii) and 1.1441–5(d)(2), X is presumed to be a U.S. partnership in absence of any indicia of foreign partnership status. The U.S. source interest paid to X is reportable under section 6049 on Form 1099 and the interest is subject to backup withholding under section 3406 because X has not provided its TIN on a valid Form W–9.

Example 2. (i) *Facts.* The facts are the same as in *Example 1,* except that the interest paid by USP is from sources outside the United States.

(ii) *Analysis.* Interest from sources outside the United States is not an amount subject to withholding, as defined in §1.1441–2(a). Under paragraph (d)(1) of this section, USP must apply the provisions of §§1.1441–1(b)(2) and 1.1441–5(c) and (e) to determine the payee. Under §1.1441–1(b)(2)(i), X, the person to whom the payment is made, is considered to be the payee, unless X is determined to be a flow-through entity, in which case the rules of §1.1441–5(c) or (e) apply to determine the payee. Under paragraph (d)(2)(i) of this section, the rules of §1.1441–1(b)(3)(ii) apply to determine the classification of a payee as an individual, trust, estate, corporation, or partnership. These rules apply irrespective of whether the payment is an amount subject to withholding. Under §1.1441–1(b)(3)(ii)(B), X is presumed to be a partnership, since X does not appear to be an individual, trust or estate, and X cannot be presumed to be an exempt recipient in the absence of documentation. Paragraph (d)(2)(i) of this section requires USP to apply the provisions of §§1.1441–1(b)(3)(iii) and 1.1441–5(d) to determine whether, X is presumed to be a U.S. or foreign partnership. Under §§1.1441–1(b)(3)(iii) and 1.1441–5(d)(2), X is presumed to be a U.S. partnership in absence of any indicia of foreign partnership status. The foreign source interest is a payment subject to reporting on Form 1099 under §1.6049–5(a). Further, because X is a non-exempt recipient that has failed to provide its TIN on a valid Form W–9, the foreign source interest is subject to backup withholding under section 3406.

Example 3. (i) *Facts.* USP is a U.S. payor as defined in paragraph (c)(5) of this section. USP makes a payment of U.S. source interest outside the United States to an offshore account of X. See paragraphs (c)(1) for a definition of offshore account and (e) for a payment outside the United States. USP does not have a withholding certificate from X as defined in §1.1441–1(c)(16) nor does it have documentary evidence as described in §1.1441–1(e)(1)(ii)(A)(*2*) and 1.6049–5(c)(1).

(ii) *Analysis.* The interest is an amount subject to withholding as defined in §1.1441–2(a). Under paragraph (d)(1) of this section, USP must apply the provisions of §1.1441–1(b)(2) and §1.1441–5(c) and (e) to determine the payee. Under §1.1441–1(b)(2)(i), X, the person to whom the payment is made, is considered to be the payee, unless X is determined to be a flow-through entity, in which case the rules of §1.1441–5(c) or (e) apply to determine the payee. Under paragraph (d)(2)(i) of this section, the rules of §1.1441–1(b)(3)(ii) apply to determine the classification of a payee as an individual, trust, estate, corporation, or partnership. Under §1.1441–1(b)(3)(ii)(B), X is presumed to be a partnership, since X does not appear to be an individual, trust or estate, and X cannot be presumed to be an exempt recipient in the absence of documentation. Paragraph (d)(2)(i) of this section requires USP to apply the provisions of §§1.1441–1(b)(3)(iii) and 1.1441–5(d) to determine whether, X is presumed to be a U.S. or foreign partnership. Under §§1.1441–1(b)(3)(iii)(D) and 1.1441–5(d)(2), X is presumed to be a foreign partnership. Therefore, under paragraph (d)(1) of this section and §1.1441–5(c)(1)(i)(E), the payees of the interest are presumed to be the partners of X. Under §1.1441–5(d)(3), the partners are presumed to be undocumented foreign persons. Therefore, USP must withhold 30 percent of the interest payment under §1.1441–1(b)(1) and report the payment on Form 1042–S in accordance with §1.1461–1(c).

Example 4. (i) *Facts.* The facts are the same as in *Example 3*, except that the interest is paid by F, a non-U.S. payor.

(ii) *Analysis.* The analysis and result are the same as in *Example 3.* F is a withholding agent under §1.1441–7 and its status as a non-U.S. payor under paragraph (c)(5) of this section is irrelevant.

Example 5. (i) *Facts.* USP is a U.S. payor as defined in paragraph (c)(5) of this section. USP makes a payment outside the United States of interest from sources outside the United States to an offshore account of X. USP does not have a withholding certificate from X as defined in §1.1441–1(c)(16) nor does it have documentary evidence as described in §§1.1441–1(e)(1)(ii)(A)(*2*) and 1.6049–5(c)(1). USP does not have actual knowledge of an employer identification number for X. X does not appear to be an individual, trust, or estate and cannot be treated as an exempt recipient, as defined in §1.6049–4(c)(1)(ii) in the absence of documentation.

(ii) *Analysis.* The interest is not an amount subject to withholding as defined in §1.1441–2(a). Under paragraph (d)(1) of this section, USP must apply the rules of §§1.1441–1(b)(2) and 1.1441–5(c) and (e) to determine the payee of the interest. Under §1.1441–1(b)(2)(i), X, the person to whom the payment is made, is considered to be the payee, unless X is determined to be a flow-through entity, in which case the rules of §1.1441–5(c) or (e) apply to determine the payee. Under paragraph (d)(2)(i) of this section, §1.1441–1(b)(3)(ii) applies to determine X's classification as an individual, trust, estate, corporation or partnership. Under §1.1441–1(b)(3)(ii)(B), X is treated as a partnership, since it does not appear to be an individual, trust, or estate and cannot be treated as an exempt recipient without documentation. Paragraph (d)(2)(i) of this section requires USP to apply the provisions of §§1.1441–1(b)(3)(iii) and 1.1441–5(d) to determine whether, X is presumed to be a U.S. or foreign partnership. Paragraph (d)(2)(i) also states that the presumptions of foreign status for payments made to offshore accounts contained in §§1.1441–1(b)(3)(iii)(D) and 1.1441–5(d)(2) do not apply to amounts that are not subject to withholding. Therefore, under §§1.1441–1(b)(3)(iii) and 1.1441–

5(d)(2), X is presumed to be a U.S. partnership because it does not have actual knowledge that X's employer identification number begins with the digits ''98.'' Therefore, USP must treat X as a U.S. person that is not an exempt recipient and report the payment on Form 1099 under section 6049. Under § 31.3406(g)–1(e) of this chapter, however, USP is not required to backup withhold on the payment unless it has actual knowledge that X is a U.S. person that is not an exempt recipient.

Example 6. (i) *Facts*. The facts are the same as in *Example 5*, except that the interest is paid by F, a non-U.S. payor, as defined under paragraph (c)(5) of this section.

(ii) *Analysis*. The analysis is the same as under *Example 5*. However, because F is a non-U.S. payor paying foreign source interest outside the United States, paragraph (b)(6) of this section exempts the payment from reporting under section 6049.

Example 7. (i) *Facts*. USP, a U.S. payor as defined in paragraph (c)(5) of this section, makes a payment of U.S. source interest to NQI, a foreign corporation and a nonqualified intermediary as defined in § 1.1441–1(c)(14). The interest is not deposit interest as defined in sections 871(i)(2)(A) and 881(d). The interest is paid inside the United States to an account maintained in the United States. NQI has provided USP with a nonqualified intermediary withholding certificate, as described in § 1.1441–1(e)(3)(iii), but has not attached any documentation from the persons on whose behalf it acts or a withholding statement as described in § 1.1441–1(e)(3)(iv).

(ii) *Analysis*. U.S. source interest is an amount subject to withholding under § 1.1441–2(a). USP may treat the payment as made to a foreign intermediary under § 1.1441–1(b)(3)(v)(A) because USP has received a nonqualified intermediary withholding certificate from NQI. Under paragraph (d)(3)(i) of this section, USP must apply § 1.1441–1(b)(2)(v) to determine the payees of the payment. Under § 1.1441–1(b)(2)(v)(A), USP must treat the persons on whose behalf NQI is acting as the payees. Paragraph (d)(3)(i) of this section also requires USP to apply the presumption rules of § 1.1441–1(b)(3)(v) if it cannot reliably associate the payment with valid documentation from a payee. See § 1.1441–1(b)(2)(vii). Under § 1.1441–1(b)(3)(v)(B), the interest is treated as paid to an unknown foreign payee because it cannot be reliably associated with documentation under § 1.1441–1(b)(2)(vii). Therefore, the payment is not subject to reporting on Form 1099 under paragraph (b)(12) of this section because the payment is presumed made to a foreign person. The payment is subject to withholding, however, under § 1.1441–1(b) at a rate of 30 percent and is subject to reporting on Form 1042–S under § 1.1461–1(c).

Example 8. (i) *Facts*. The facts are the same as in *Example 7*, except that the interest is paid outside the United States, as defined in paragraph (e) of this section to an offshore account, as defined in paragraph (c)(1) of this section.

(ii) *Analysis*. The analysis and results are the same as in *Example 7*. The rules of § 1.1441–1(b)(3)(v) apply irrespective of where the account is maintained or the payment made.

Example 9. (i) *Facts*. The facts are the same as in *Example 8*, except that the interest is paid by F, a non-U.S. payor, as defined in paragraph (c)(5) of this section.

(ii) *Analysis*. The analysis and results are the same as in *Example 7*.

Example 10. (i) USP, a U.S. payor as defined in paragraph (c)(5) of this section, makes a payment of foreign source interest to NQI, a foreign corporation and a nonqualified intermediary as defined in § 1.1441–1(c)(14). NQI has provided USP with a nonqualified intermediary withholding certificate, as described in § 1.1441–1(e)(3)(iii), but has not attached any documentation from the persons on whose behalf it acts or a withholding statement as described in § 1.1441–1(e)(3)(iv).

(ii) *Analysis*. Foreign source interest is not an amount subject to withholding under chapter 3 of the Internal Revenue Code. See § 1.1441–2(a). Under paragraph (d)(3)(ii)(A) of this section, amounts that are not subject to withholding under chapter 3 of the Internal Revenue Code that a payor may treat as paid to a foreign intermediary are treated as made to an exempt recipient described in § 1.6049–4(c). Therefore, the foreign source interest is not subject to reporting on Form 1099.

Example 11. (i) *Facts*. USP is a U.S. payor as defined in paragraph (c)(5) of this section. USP pays U.S. source original issue discount from the redemption of an obligation described in section 871(g)(1)(B) to NQI, a foreign corporation that is a nonqualified intermediary as defined in § 1.1441–1(c)(14). The redemption proceeds are paid to an account NQI has with USP in the United States. NQI provides a nonqualified intermediary withholding certificate as described in § 1.1441–1(e)(3)(iii) but does not attach any payee documentation or a withholding statement described in § 1.1441–1(e)(3)(iv).

(ii) *Analysis*. Under paragraph (d)(3)(ii)(A) of this section, USP must treat the payment as made to an undocumented U.S. payee that is not an exempt recipient and report the payment on Form 1099. Further, because the payment is made inside the United States, the exception to backup withholding for offshore accounts contained in § 31.3406(g)–1(e) of this chapter does not apply and the payment is subject to backup withholding.

Example 12. (i) *Facts*. P, a payor, makes a payment to NQI of U.S. source interest on debt obligations issued prior to July 18, 1984.

Therefore, the interest does not qualify as portfolio interest under section 871(h) or 881(d). NQI is a nonqualified foreign intermediary, as defined in §1.1441–1(c)(14), and has furnished P a valid nonqualified intermediary withholding certificate described in §1.1441–1(e)(3)(iii) to which it has attached a valid Form W–9 for A, and two valid beneficial owner Forms W–8, one for B and one for C. A is not an exempt recipient under §1.6049–4(c). NQI furnishes a withholding statement, described in §1.1441–1(e)(3)(iv), in which it allocates 20 percent of the U.S. source interest to A, but does not allocate the remaining 80 percent of the interest between B and C. B's withholding certificate indicates that B is a foreign pension fund, exempt from U.S. tax under the U.S. income tax treaty with Country T. C's withholding certificate indicates that C is a foreign corporation not entitled to a reduced rate of withholding.

(ii) *Analysis*. Under paragraph (d)(3)(i) of this section, P applies the rules of §1.1441–1(b)(2)(v) to determine the payees of the interest. Under that section, the payees are the persons on whose behalf NQI acts—A, B and C. Because P can reliably associate 20 percent of the payment with valid documentation provided by A, P must treat 20 percent of the interest as paid to A, a U.S. person not exempt from reporting, and report the payment on Form 1099. P cannot reliably associate the remaining 80 percent of the payment with valid documentation under §1.1441–1(b)(2)(vii) and, therefore, under paragraph (d)(3)(i) of this section must apply the presumption rules of §1.1441–1(b)(3)(v). Under that section, the interest is presumed paid to an unknown foreign payee. Under paragraph (b)(12) of this section, P is not required to report the interest presumed paid to a foreign person on Form 1099. Under §1.1441–1(b), 80 percent of the interest is subject to 30 percent withholding, however, and the interest is reportable on Form 1042-S under §1.1461–1(c).

Example 13. (i) *Facts*. The facts are the same as in *Example 12*, except that P can reliably associate 30 percent of the payment of interest to B, but cannot reliably associate the remaining 70 percent with A or C.

(ii) *Analysis*. Under paragraph (d)(3)(i) of this section, P applies the rules of §1.1441–1(b)(2)(v) to determine the payees of the interest. Under that section, the payees are the persons on whose behalf NQI acts—A, B and C. Because P can reliably associate 30 percent of the payment with B, a foreign pensions fund exempt from withholding under an income tax treaty, P may treat that payment as paid to B and not subject to reporting on Form 1099 under paragraph (b)(12) of this section. P cannot reliably associate the remaining 70 percent of the payment with valid documentation under §1.1441–1(b)(2)(vii) and, therefore, under paragraph (d)(3)(i) of this section must apply the presumption rules of §1.1441–1(b)(3)(v). Under that section, the interest is presumed paid to an unknown foreign payee. Under paragraph (b)(12) of this section, P is not required to report the interest presumed paid to a foreign person on Form 1099. Under §1.1441–1(b), 80 percent of the interest is subject to 30 percent withholding, however, and the interest is reportable on Form 1042-S under §1.1461–1(c).

Example 14. (i) *Facts*. The facts are the same as in *Example 12*, except that P also makes a payment of foreign source interest to NQI.

(ii) *Analysis*. Under paragraph (d)(3)(ii)(A), P may treat the foreign source interest as paid to an exempt recipient as defined in §1.6049–4(c) and not subject to reporting on Form 1099 even though some or all of the foreign source interest may in fact be owned by A, the U.S. person that is not exempt from reporting.

(e) *Determination of whether amounts are considered paid outside the United States*—(1) *In general*. For purposes of section 6049 and this section, an amount is considered to be paid by a payor or middleman outside the United States if the payor or middleman completes the acts necessary to effect payment outside the United States. See paragraphs (e)(2), (3), and (4) of this section for further clarification of where amounts are considered paid. A payment shall not be considered to be made within the United States for purposes of section 6049 merely by reason of the fact that it is made on a draft drawn on a United States bank account or by a wire or other electronic transfer from a United States account. However, without regard to the location of the account from which the amount is drawn, an amount that is described in paragraph (e)(1) (i) or (ii) of this section and paid by transfer to an account maintained by the payee in the United States or by mail to a United States address is not considered to be paid outside the United States.

(i) An amount is described in this paragraph (e)(1)(i) if it is paid by an issuer or the paying agent of the issuer and the obligation is either—

(A) Issued by a U.S. payor, as defined in paragraph (c)(5) of this section;

(B) Registered under the Securities Act of 1933 (15 U.S.C. 77a); or

(C) Listed on an exchange that is registered as a national securities exchange in the United States or included in an interdealer quotation system in the United States.

(ii) An amount is described in this paragraph (e)(1)(ii) if it is paid by a U.S. middleman (as defined in paragraph (c)(5) of this section) that, as a custodian, nominee, or other agent of a payee, collects the amount for or on behalf of the payee.

(2) *Amounts paid with respect to deposits or accounts with banks and other financial institutions.* Notwithstanding paragraph (e)(1) of this section, an amount paid by a bank or other financial institution with respect to a deposit or with respect to an account with the institution is considered paid at the branch or office at which the amount is credited unless the amount is collected by the financial institution as the agent of the payee. However, an amount will not be considered to be paid at the branch or office where the amount is considered to be credited unless the branch or office is a permanent place of business that is regularly maintained, occupied, and used to carry on a banking or similar financial business; the business is conducted by at least one employee of the branch or office who is regularly in attendance at such place of business during normal business hours; and the branch or office receives deposits and engages in one or more of the other activities described in §1.864–4(c)(5)(i). In addition, an amount paid by a bank or other financial institution with respect to a deposit or an account with the institution is not considered paid at a branch or office outside the United States if the customer has transmitted instructions to an agent, branch, or office of the institution from inside the United States by mail, telephone, electronic transmission, or otherwise concerning the deposit or account (unless the transmission from the United States has taken place in isolated and infrequent circumstances).

(3) *Coupon bonds and discount obligations in bearer form.* Notwithstanding paragraph (e)(1) of this section, an amount paid with respect to a bond with coupons attached (including a certificate of deposit with detachable interest coupons) or a discount obligation that is not in registered form (within the meaning of section 163(f) and the regulations thereunder) is considered to be paid where the coupon or the discount obligation is presented to the payor or its paying agent for payment. However, without regard to where the coupon or discount obligation is presented for payment, an amount paid with respect to either a bond with coupons attached or a discount obligation by transfer to an account maintained by the payee in the United States or by mail to the United States is considered paid in the United States if the payment is described in paragraphs (e)(3) (i) and (ii) of this section.

(i) The amount is paid by an issuer or the paying agent of the issuer and the obligation is either—

(A) Issued by a U.S. payor, as defined in paragraph (c)(5) of this section;

(B) Registered under the Securities Act of 1933 (15 U.S.C. 77a); or

(C) Listed on an exchange that is registered as a national securities exchange in the United States or included in a interdealer quotation system in the United States.

(ii) The amount is paid by a U.S. middleman (as defined in paragraph (c)(5) of this section) that, as a custodian, nominee, or other agent of payee, collects the amount for or on behalf of the payee.

(4) *Foreign-targeted registered obligations.* Notwithstanding paragraph (e)(1) of this section, where the payor is the issuer or the issuer's agent, an amount is considered paid outside the United States with respect to a foreign-targeted registered obligation, as described in §1.871–14(e)(2), if either the amount is paid by transfer to an account maintained by the registered owner outside the United States, or by mail to an address of the registered owner outside the United States, or by credit to an international account. For purposes of this paragraph (e)(4), the term *international account* means the book-entry account of a financial institution (within the meaning of section 871(h)(4)(B)) or of an international financial organization with the Federal Reserve Bank of New York for which the Federal Reserve Bank of New York

maintains records that specifically identify an international financial organization or a financial institution (within the meaning of section 871(h)(4)(B)) as either a non-United States person or a foreign branch of a United States person as registered owner. An international financial organization is a central bank or monetary authority of a foreign government or a public international organization of which the United States is a member to the extent that such central bank, authority, or organization holds obligations solely for its own account and is exempt from tax under section 892 or 895.

(5) *Examples*. The application of the provisions of this paragraph (e) are illustrated by the following examples:

Example 1. FC is a foreign corporation that is not a U.S. payor or U.S. middleman, as defined in paragraph (c)(5) of this section. A holds FC coupon bonds that are not in registered form under section 163(f) and the regulations thereunder, that were issued by FC in a public offering outside the United States, that are not registered under the Securities Act of 1933 (15 U.S.C. 77a), and that are neither listed on an exchange that is registered as a national securities exchange in the United States nor included in an interdealer quotation system. DC, a U.S. corporation that is engaged in a commercial banking business, is the designated fiscal agent for FC. FB, a foreign branch of DC, is the designated paying agent with respect to the bonds issued by FC. A does not have an account with FB. A presents a coupon from a FC bond for payment to FB at its office outside the United States. FB pays A with a check drawn against a bank account maintained in the United States. For purposes of section 6049, the place of payment of interest on the FC bond by FB to A is considered to be outside the United States under paragraph (e)(3) of this section.

Example 2. The facts are the same as in *Example 1* except that A presents the coupon to FB at its office outside the United States with instructions to transfer funds in payment to a bank account maintained by A in the United States. FB transfers the funds in accordance with A's instructions. Even though the amount is credited to an account in the United States, the place of payment of interest on the FC bonds is considered to be outside the United States under paragraph (e)(3) of this section because the coupon is presented for payment outside the United States; because FC is a foreign person that is not a U.S. payor or U.S. middleman, as defined in paragraph (d)(1) of this section; because FB is not acting as A's agent; and because the obligation is not registered under the Securities Act of 1933 (15 U.S.C. 77a), listed on a securities exchange that is registered as a national securities exchange in the United States, or included in an interdealer quotation system.

Example 3. FC is a foreign corporation that is not a U.S. payor or U.S. middleman, as defined in paragraph (d)(1) of this section. B, a United States citizen, holds a bond issued by FC in registered form under section 163(f) and the regulations thereunder and registered under the Securities Act of 1933 (15 U.S.C. 77a). The bond is not a foreign-targeted registered obligation as defined in §1.871–14(e)(2). DB, a United States branch of a foreign corporation engaged in the commercial banking business, is the registrar of the bonds issued by FC. DB supplies FC with a list of the holders of the FC bonds. Interest on the FC bonds is paid to B and other bondholders by checks prepared by FC at its principal office outside the United States, and B's check is mailed from there to his designated address in the United States. The bond is described in paragraph (e)(1)(i)(B) of this section. The place of payment to B by FC of the interest on the FC bonds is considered to be inside the United States under paragraph (e)(1) of this section.

Example 4. The facts are the same as in Example 3 except that the checks are prepared and mailed in the United States by DC, a U.S. corporation engaged in the commercial banking business that is the designated paying agent with respect to the bonds issued by FC, and B's check is mailed to his designated address outside the United States. For purposes of section 6049, the place of payment by DC of the interest on the FC bonds is considered to be within the United States under paragraph (e)(1) of this section.

Example 5. Individual C deposits funds in an account with FB, a foreign country X branch of DB, a U.S. corporation engaged in the commercial banking business. FB maintains an office and employees in foreign country X, accepts deposits, and conducts one or more of the other activities listed in §1.864–4(c)(5)(i). The terms of C's deposit provide that it will be payable in six months with accrued interest. On the day that the interest is credited to C's account with FB, C telephones DB from inside the United States and asks DB to direct FB to transfer the funds in his account with FB to an account C maintains in the United States with DB. Transmissions from the United States concerning this account have taken place in isolated and infrequent circumstances. Under paragraph (e)(2) of this section, FB is considered to have paid the interest on C's deposit outside the United States.

Example 6. The facts are the same as in *Example 5* except that C has placed his deposit with FB for an indefinite period of time. Interest will be credited to C's account daily. C

has instructed FB to wire the interest at 90-day intervals to C's account with DB within the United States. FB is considered to have paid the interest credited to A's account within the United States under paragraph (e)(2) of this section because the regular crediting of the account disqualifies the transmission from being isolated or infrequent.

Example 7. DC, a U.S. corporation engaged in the commercial banking business, maintains FB, a branch in foreign country X. FB has an office and employees in foreign country X, accepts deposits, and engages in one or more of the other activities listed in §1.864–4(c)(5)(i). D, a United States citizen, purchases a certificate of deposit issued in 1980 by FB. The certificate of deposit has a maturity of 20 years and has detachable interest coupons payable at six-month intervals. D presents some of the coupons at the U.S. office of DC and receives payment in cash. Because the coupon is presented to DC for payment within the United States, DC is considered to have made the payment within the United States under paragraph (e)(3) of this section.

Example 8. FB is recognized by both foreign country X and by the Federal Reserve Bank as a foreign country X branch of DC, a U.S. corporation engaged in the commercial banking business. A local foreign country X bank serves as FB's resident agent in Country X. FB maintains no physical office or employees in foreign country X. All the records, accounts, and transactions of FB are handled at the United States office of DC. E deposits funds in an amount maintained with FB. Interest earned on the deposit is periodically credited to E's account with FB by employees of DC. For purposes of section 6049, the place of payment of the interest on E's deposit with FB is considered to be within the United States by reason of paragraphs (e)(1) and (2) of this section.

Example 9. DC is a U.S. corporation. A holds bonds that were issued by DC in registered form under section 163(f) and the regulations thereunder and that are foreign-targeted registered obligations as defined in §1.871–14(e)(2). DB, a commercial banking business, is the registrar of bonds issued by DC. Interest on the DC bonds is paid to A and other bondholders by check prepared by DB at its principal office inside the United States and mailed from there to A's address outside the United States. The check is drawn on a United States account maintained by DC with DB within the United States. The place of payment to A by DB of the interest on the DC bonds is considered to be outside the United States under paragraph (e)(4) of this section.

(f) *Original issue discount treated as payment of interest.* In determining whether an obligation is one which was issued at a discount and the amount of discount which is includible in income of the holder, a payor (other than the issuer of the obligation) may rely on the Internal Revenue Service's publication of publicly traded original issue discount obligations. In the case of an obligation as to which there is during any calendar year an amount of original issue discount includible in the gross income of any holder (as determined under sections 1232 and 1232A and the regulations thereunder), the issuer of the obligation or a middleman (as defined in §1.6049–4(f)(4)) shall be treated as having paid to such holder during such calendar year an amount of interest equal to the amount of original issue discount so includible without regard to any reduction by reason of a purchase allowance under sections 1232(a)(2)(C)(ii), 1232A (a)(6) or (b)(4) or a purchase at a premium under 1232A(c)(4)(A) or paragraph (d)(2) of §1.1232–3. Thus, the determination of the amount of original issue discount includible in the gross income of any holder with respect to any obligation shall be determined as if any holder of the obligation were the original holder. In the case of (1) an obligation to which section 1232A does not apply (for example, a short-term government obligation as defined in section 1232(a)(3)) and (2) an obligation issued on or before December 31, 1982, in bearer form, the amount of original issue discount includible in gross income shall be treated as if paid in the calendar year in which the date of maturity occurs or in which the date of redemption occurs if redemption occurs before maturity.The amount subject to reporting on an obligation issued in bearer form with a maturity at the date of issue of more than 1 year (a long term obligation) is the amount of original issue discount includible in the gross income of the holder during the calendar year of maturity or redemption if redemption occurs before maturity. The amount of original issue discount subject to reporting on a long term obligation shall not be reduced to reflect any purchase allowance. Discount on short term government obligations as defined in section 1232(a)(3), such as Treasury bills, and discount on other obligations with a maturity at the date of issue of not

more than 1 year (a short term obligation), including commercial paper, when paid at maturity or redemption if redemption occurs before maturity, shall constitute a payment of interest for purposes of section 6049. In general, the amount subject to reporting on short term obligations is the difference between the stated redemption price at maturity and the original issue price. The procedure set forth in section 3455(b)(2)(B) and § 31.3455(b)–1(b)(3) for establishing the price at which a holder purchased an obligation subsequent to the date of original issue shall apply for purposes of section 6049. Original issue discount on an obligation (including an obligation with a maturity of not more than 6 months from the date of original issue) held by a nonresident alien individual or foreign corporation is interest described in paragraph (b)(1)(vi) (A) or (B) of this section and, therefore is not interest subject to reporting under section 6049 unless it is described in § 1.6049–8(a) (relating to bank deposit interest paid to a Canadian nonresident alien individual).

(g) *Effective date*—(1) *General rule*. The provisions of paragraphs (b)(6) through (15), (c), (d), and (e) of this section apply to payments made after December 31, 2000.

(2) *Transition rules*. The validity of a withholding certificate (namely, Form W–8 or other form upon which the payor is permitted to rely to hold the payee as a foreign person) that was valid on January 1, 1998, under the regulations in effect prior to January 1, 2001 (see 26 CFR parts 1 and 35a, revised April 1, 1999) and expired, or will expire, at any time during 1998, is extended until December 31, 1998. The validity of a withholding certificate that is valid on or after January 1, 1999, remains valid until its validity expires under the regulations in effect prior to January 1, 2001 (see 26 CFR parts 1 and 35a, revised April 1, 1999) but in no event shall such a withholding certificate remain valid after December 31, 2000. The rule in this paragraph (g)(2), however, does not apply to extend the validity period of a withholding certificate that expires solely by reason of changes in the circumstances of the person whose name is on the certificate. Notwithstanding the first three sentences of this paragraph (g)(2), a payor may choose not to take advantage of the transition rule in this paragraph (g)(2) with respect to one or more withholding certificates valid under the regulations in effect prior to January 1, 2001 (see 26 CFR parts 1 and 35a, revised April 1, 1999) and, therefore, may require withholding certificates conforming to the requirements described in this section (new withholding certificates). For purposes of this section, a new withholding certificate is deemed to satisfy the documentation requirement under the regulations in effect prior to January 1, 2001 (see 26 CFR parts 1 and 35a, revised April 1, 1999). Further, a new withholding certificate remains valid for the period specified in § 1.1441–1(e)(4)(ii), regardless of when the certificate is obtained.

[T.D. 7881, 48 FR 12972, Mar. 28, 1983, as amended by T.D. 7987, 49 FR 42719, Oct. 24, 1984; T.D. 8029, 50 FR 23680, June 5, 1985; T.D. 8664, 61 FR 17573, Apr. 22, 1996; T.D. 8734, 62 FR 53483, Oct. 14, 1997; T.D. 8804, 63 FR 72186, 72188, Dec. 31, 1998; T.D. 8856, 64 FR 73411, 73412, Dec. 30, 1999; T.D. 8881, 65 FR 32207, May 22, 2000; 66 FR 18189, Apr. 6, 2001]

§ 1.6049–5T Reporting by brokers of interest and original issue discount on and after January 1, 1986 (temporary).

For purposes of § 1.6049–5 (c), relating to original issue discount treated as interest subject to reporting, on and after January 1, 1986, a payor who is a broker or middleman holding as a nominee—

(a) A bank certificate of deposit (without regard to whether the broker or middleman sold the certificate of deposit to the owner), or

(b) Any other original issue discount debt instrument that is specified by the Commissioner,

must determine whether that obligation is one that was issued at a discount and the amount of discount that is includible in the income of the owner. However, before January 1, 1987, reporting is required only with respect to certificates of deposit (or any such other obligations) held by a broker or middleman as a nominee on or after June 1, 1986, that were sold by the broker or middleman (whether for the broker's account or as an agent of the

issuer) to the owner. The preceding two sentences do not apply to certificates of deposit (or any such other obligations) held on or after January 1, 1986, but disposed of before June 1, 1986; reporting requirements with respect to such certificates of deposit (or any other such obligations) shall be determined under the provisions of § 1.6049–5 (c) as in effect immediately prior to publication of this § 1.6049–5T.

[T.D. 8109, 51 FR 45106, Dec. 17, 1986]

§ 1.6049–6 Statements to recipients of interest payments and holders of obligations for attributed original issue discount.

(a) *Requirement of furnishing statement to recipient.* Every person filing a Form 1099 under section 6049(a) and § 1.6049–4(e) shall furnish to the person whose identifying number is required to be shown on the form a written statement showing the information required by paragraph (b) of this section. With respect to interest other than interest reported on a transactional basis under § 1.6049–4(e), no statement is required to be furnished under section 6049(c) and this section if the aggregate of the payments for the calendar year is less than $10, unless such payment is subject to the tax imposed under section 3406. In the case of any payment that is subject to withholding under section 3406, a statement shall be furnished irrespective of the amount of the payment. With respect to payments which are reported on a transactional basis, no statement is required to be furnished under section 6049(c) and this section to a person if the payment of interest to (or received on behalf of) such person for the transaction is less than $10 unless the payment is subject to withholding under section 3406. Again, in the case of any payment that is subject to withholding under section 3406, a statement shall be furnished irrespective of the amount of the payment.

(b) *Form of statement.* The written statement required to be furnished to a person under paragraph (a) of this section shall show the following information:

(1) With respect to payments of interest (other than original issue discount) to any person during a calendar year, the statement shall show:

(i) The aggregate amount of payments shown on Form 1099 as having been made to (or received on behalf of) such person;

(ii) The amount of tax withheld under section 3406, if any;

(iii) The name and address of the person filing the form; and

(iv) A legend stating that such amount is being reported to the Internal Revenue Service.

(2) With respect to original issue discount includible in the gross income of a holder of an obligation during a calendar year, the statement shall show:

(i) The aggregate amount of original issue discount includible in the gross income by (or on behalf of) such person for the calendar year with respect to the obligation (determined by applying the rules of paragraph (b)(2) of § 1.6049–4);

(ii) The amount of tax withheld under section 3406, if any;

(iii) The account, serial, or other identifying number of each obligation with respect to which a return is being made;

(iv) All other items shown on Form 1099 for such calendar year; and

(v) A legend stating that such amount and such items are being reported to the Internal Revenue Service.

(c) *Time for furnishing statements.* Each statement required by this section to be furnished to any person for a calendar year with respect to a payment of interest (other than interest where a middleman or a Federal agency makes a return on a transactional basis (as described in paragraph (e) of § 1.6049–4)) shall be furnished to such person after April 30 of the year of payment and on or before January 31 of the following year, but no statement may be furnished before the final interest payment for the calendar year. If a middleman or a Federal agency makes a return on a transactional basis, the statement shall be furnished at, or any time subsequent to, the time of payment, but in no event later than January 31 of the year following the calendar year of payment.

(d) *Special rule.* The requirements of this section for the furnishing of a statement to any person, including the legend requirement of paragraph (b)(1)(iv) and (2)(v) of this section, may

be met by the furnishing to such person a copy of the Form 1099 filed pursuant to §1.6049–4, or an acceptable substitute, in respect of such person. However, in the case of Form 1099 with respect to original issue discount on obligations subject to section 1232A, a copy of the instructions must also be sent to such person. A statement shall be considered to be furnished to a person within the meaning of this section if it is mailed to such person at his last known address.

(e) *Statements to recipients*—(1) *Requirement*. A person required to make an information return under section 6049(a) and §1.6049–4 must furnish a statement to each recipient whose identifying number is required to be shown on the related information return for interest or original issue discount paid or accrued.

(2) *Form, manner, and time for providing statements to recipients*. The statement required by paragraph (e)(1) of this section must be either the official Form 1099 prescribed by the Internal Revenue Service for the respective calendar year or an acceptable substitute statement. The rules under §1.6042–4 (relating to statements with respect to dividends) apply comparably in determining the form of an acceptable substitute statement permitted by this paragraph (e). Those rules also apply for purposes of determining the manner of and time for providing the Form 1099 or its acceptable substitute to a recipient under paragraph (e)(1) of this section. However, with respect to original issue discount, the Form 1099 or acceptable substitute statement required by paragraph (e)(1) of this section must show the aggregate amount of original issue discount includible in the gross income by the recipient for the calendar year with respect to the obligation (determined by applying the rules of §1.6049–4(b)(2)), and the amount, serial number, or other identifying number of each obligation with respect to which a return is being made. With respect to interest or original issue discount, the Form 1099 or acceptable substitute statement required by paragraph (e)(1) of this section must be furnished to the recipient on or before January 31 of the year following the calendar year for which the return under section 6049(a)(1) was required to be made.

(3) *Cross-reference to penalty*. For provisions relating to the penalty provided for failure to furnish timely a correct payee statement required under section 6049(c) and §1.6049–6(a), see §301.6722–1 of this chapter (Procedure and Administration Regulations). See §301.6724–1 of this chapter for the waiver of a penalty if the failure is due to reasonable cause and is not due to willful neglect.

(4) *Special rule for amounts described in §1.6049–8(a) paid after December 31, 1996*. In the case of amounts described in §1.6049–8(a) (relating to payments of interest to Canadian nonresident alien individuals) paid after December 31, 1996, any person who makes a Form 1042–S under section 6049(a) and §1.6049–4(b)(5) shall furnish a statement to the recipient. The statement shall include a copy of the Form 1042–S required to be prepared pursuant to §1.6049–4(b)(5) and a statement to the effect that the information on the form is being furnished to the United States Internal Revenue Service and may be furnished to Canada.

(5) *Effective date*. This paragraph (e) is effective for payee statements due after December 31, 1995, without regard to extensions. For the substantially similar statement mailing requirements that apply with respect to forms required to be filed after October 22, 1986, and before January 1, 1996, see Rev. Proc. 84–70 (1984–2 C.B. 716) (or successor revenue procedures). See §601.601(d)(2) of this chapter.

[T.D. 7881, 48 FR 12976, Mar. 28, 1983, as amended by T.D. 8637, 60 FR 66111, Dec. 21, 1995; 61 FR 11307, Mar. 20, 1996; T.D. 8664, 61 FR 17574, Apr. 22, 1996; T.D. 8664, 61 FR 40993, Aug. 7, 1996; T.D. 8734, 62 FR 53491, Oct. 14, 1997]

§1.6049–7 Returns of information with respect to REMIC regular interests and collateralized debt obligations.

(a) *Definition of interest*—(1) *In general*. For purposes of section 6049(a), for taxable years beginning after December 31, 1986, the term *interest* includes:

(i) Interest actually paid with respect to a collateralized debt obligation (as defined in paragraph (d)(2) of this section),

(ii) Interest accrued with respect to a REMIC regular interest (as defined in section 860G(a)(1)), or

(iii) Original issue discount accrued with respect to a REMIC regular interest or a collateralized debt obligation.

(2) *Interest deemed paid.* For purposes of this section and in determining who must make an information return under section 6049(a), interest as defined in paragraphs (a)(1) (ii) and (iii) of this section is deemed paid when includible in gross income under section 860B (b) or section 1272.

(b) *Information required to be reported to the Internal Revenue Service*—(1) *Requirement of filing Form 8811 by REMICs and other issuers*—(i) *In general.* Except in the case of a REMIC all of whose regular interests are owned by one other REMIC, every REMIC and every issuer of a collateralized debt obligation (as defined in paragraph (d)(2) of this section) must make an information return on Form 8811, Information Return for Real Estate Mortgage Investment Conduits (REMICs) and Issuers of Collateralized Debt Obligations. Form 8811 must be filed in the time and manner prescribed in paragraph (b)(1)(iii) of this section. The submission of Form 8811 to the Internal Revenue Service does not satisfy the election requirement specified in §1.860D-1T(d) and does not require election of REMIC status.

(ii) *Information required to be reported.* The following information must be reported to the Internal Revenue Service on Form 8811—

(A) The name, address, and employer identification number of the REMIC or the issuer of a collateralized debt obligation (as defined in paragraph (d)(2) of this section);

(B) The name, title, and either the address or the address and telephone number of the official or representative of the REMIC or the issuer of a collateralized debt obligation who will provide to any person specified in paragraph (e)(4) of this section the interest and original issue discount information specified in paragraph (e)(2) of this section;

(C) The startup day (as defined in section 860G(a)(9)) of the REMIC or the issue date (as defined in section 1275(a)(2)) of the collateralized debt obligation;

(D) The Committee on Uniform Security Identification Procedure (CUSIP) number, aocount number, serial number, or other identifying number or information, of each class of REMIC regular interest or collateralized debt obligation;

(E) The name, title, address, and telephone number of the official or representative of the REMIC or the issuer of a collateralized debt obligation whom the Internal Revenue Service may contact, and

(F) Any other information required by Form 8811.

(iii) *Time and manner of filing of information return*—

(A) *Manner of filing.* Form 8811 must be filed with the Internal Revenue Service at the address specified on the form. The information specified in paragraph (b(1)(ii) of this section must be provided on Form 8811 regardless of whether other information returns are filed by use of electronic media.

(B) *Time for filing.* Form 8811 must be filed by each REMIC or issuer of a collateralized debt obligation on or before the later of July 31, 1989, or the 30th day after—

(*1*) the startup day (as defined in section 860G(a)(9)) in the case of a REMIC, or

(*2*) the issue date (as defined in section 1275(a)(2)) in the case of a collateralized debt obligation.

Further, each REMIC or issuer of a collateralized debt obligation must file a new Form 8811 on or before the 30th day after any change in the information previously provided on Form 8811.

(2) *Requirement of reporting by REMICs, issuers, and nominees*—(i) *In general.* Every person described in paragraph (b)(2)(ii) of this section who pays to another person $10 or more of interest (as defined in paragraph (a) of this section) during any calendar year must file an information return on Form 1099, unless the interest is paid to a person specified in paragraph (c) of this section.

(ii) *Person required to make reports.* The persons required to make an information return under section 6049(a) and this section are—

(A) REMICs or issuers of collateralized debt obligations (as defined in paragraph (d)(2) of this section), and

(B) Any broker who holds as a nominee or middleman who holds as a nominee any REMIC regular interest or any collateralized debt obligation.

(iii) *Information to be reported*—(A) *REMIC regular interests and collateralized debt obligations not issued with original issue discount.* An information return on Form 1099 must be made for each holder of a REMIC regular interest or collateralized debt obligation not issued with original issue discount, but only if the holder has been paid interest (as defined in paragraph (a) of this section) of $10 or more for the calendar year. The information return must show—

(*1*) The name, address, and taxpayer identification number of the record holder,

(*2*) The CUSIP number, account number, serial number, or other identifying number or information, of each REMIC regular interest or collateralized debt obligation, with respect to which a return is being made,

(*3*) The aggregate amount of interest paid or deemed paid to the record holder for the period during the calendar year for which the return is made,

(*4*) The name, address, and taxpayer identification number of the person required to file this return, and

(*5*) Any other information required by the form.

(B) *REMIC regular interests and collateralized debt obligations issued with original issue discount.* An information return on Form 1099 must be made for each holder of a REMIC regular interest or a collateralized debt obligation issued with original issue discount, but only if the holder has been paid interest (as defined in paragraph (a) of this section) of $10 or more for the calendar year. The information return must show—

(*1*) The name, address, and taxpayer identification number of the record holder,

(*2*) The CUSIP number, account number, serial number, or other identifying number or information, of each REMIC regular interest or collateralized debt obligation, with respect to which a return is being made,

(*3*) The aggregate amount of original issue discount deemed paid to the record holder for the period during the calendar year for which the return is made,

(*4*) The aggregate amount of interest, other than original issue discount, paid or deemed paid to the record holder for the period during the calendar year for which the return is made,

(*5*) The name, address, and taxpayer identification number of the person required to file this return, and

(*6*) Any other information required by the form.

(C) *Cross-reference.* See §1.67–3T(f)(3)(ii) for additional information required to be included on an information return on Form 1099 with respect to certain holders of regular interests in REMICs described in §1.67–3T(a)(2)(ii).

(iv) *Time and place for filing a return with respect to amounts includible as interest.* The returns required under this paragraph (b)(2) for any calendar year must be filed after September 30 of that year, but not before the payor's final payment to the payee for the year, and on or before February 28 (March 31 if filed electronically) of the following year. These returns must be filed with the appropriate Internal Revenue Service Center, the address of which is listed in the instructions for Form 1099. For extensions of time for filing returns under this section, see §1.6081–1. For magnetic media filing requirements, see §301.6011–2 of this chapter.

(c) *Information returns not required.* An information return is not required under section 6049(a) and this section with respect to payments of interest on a REMIC regular interest or collateralized debt obligation, if the holder of the REMIC regular interest or the collateralized debt obligation is—

(1) An organization exempt from taxation under section 501(a) or an individual retirement plan;

(2) The United States or a State, the District of Columbia, a possession of the United States, or a political subdivision or a wholly-owned agency or

instrumentality of any one or more of the foregoing;

(3) A foreign government, a political subdivision thereof, or an international organization;

(4) A foreign central bank of issue (as defined in §1.895–1(b)(1)) or the Bank for International Settlements;

(5) A trust described in section 4947(a)(1) (relating to certain charitable trusts);

(6) For calendar quarters and calendar years after 1988, a broker (as defined in section 6045(c) and §1.6045–1(a)(1));

(7) For calendar quarters and calendar years after 1988, a person who holds the REMIC regular interest or collateralized debt obligation as a middleman (as defined in §1.6049–4(f)(4));

(8) For calendar quarters and calendar years after 1988, a corporation (as defined in section 7701(a)(3)), whether domestic or foreign;

(9) For calendar quarters and calendar years after 1988, a dealer in securities or commodities required to register as such under the laws of the United States or a State;

(10) For calendar quarters and calendar years after 1988, a real estate investment trust (as defined in section 856);

(11) For calendar quarters and calendar years after 1988, an entity registered at all times during the taxable year under the Investment Company Act of 1940;

(12) For calendar quarters and calendar years after 1988, a common trust fund (as defined in section 584 (a));

(13) For calendar quarters and calendar years after 1988, a financial institution such as a mutual savings bank, savings and loan association, building and loan association, cooperative bank, homestead association, credit union, industrial loan association or bank, or other similar organization;

(14) For calendar quarters and calendar years after 1988, any trust which is exempt from tax under section 664(c) (*i.e.*, a charitable remainder annuity trust or a charitable remainder unitrust); and

(15) For calendar quarters and calendar years after 1988, a REMIC.

(d) *Special provisions and definitions*—(1) *Incorporation of referenced rules*. The special rules of §1.6049–4(d) are incorporated in this section, as applicable, except that §1.6049–4(d)(2) does not apply to any REMIC regular interest or any other debt instrument to which section 1272(a)(6) applies. Further, §1.6049–5(c) does not apply to any REMIC regular interest or any other debt instrument to which section 1272(a)(6) applies.

(2) *Collateralized debt obligation*. For purposes of this section, the term ''collateralized debt obligation'' means any debt instrument (except a tax-exempt obligation) described in section 1272(a)(6)(C)(ii) that is issued after December 31, 1986.

(e) *Requirement of furnishing information to certain nominees, corporations, and other specified persons*—(1) *In general*. For calendar quarters and calendar years after 1988, each REMIC or issuer of a collateralized debt obligation (as defined in paragraph (d)(2) of this section) must provide the information specified in paragraph (e)(2) of this section in the time and manner prescribed in paragraph (e)(3) of this section to any persons specified in paragraph (e)(4) of this section who request the information.

(2) *Information required to be reported*. For each class of REMIC regular interest or collateralized debt obligation and for each calendar quarter specified by the person requesting the information, the REMIC or issuer of a collateralized debt obligation must provide the following information—

(i) The name, address and Employer Identification Number of the REMIC or issuer of a collateralized debt obligation;

(ii) The CUSIP number, account number, serial number, or other identifying number or information, of each specified class of REMIC regular interest or collateralized debt obligation and, for calendar quarters and calendar years after 1991, whether the information being reported is with respect to a REMIC regular interest or a collateralized debt obligation;

(iii) Interest paid on a collateralized debt obligation in the specified class for each calendar quarter, and the aggregate amount for the calendar year if the request is made for the last quarter of the calendar year;

(iv) Interest accrued on a REMIC regular interest in the specified class for each accrual period any day of which is in the specified calendar quarter, and the aggregate amount for the calendar year if the request is made for the last quarter of the calendar year;

(v) Original issue discount accrued on a collateralized debt obligation or REMIC regular interest in the specified class for each accrual period any day of which is in that calendar quarter, and the aggregate amount for the calendar year if the request is made for the last quarter of the calendar year;

(vi) The daily portion of original issue discount per $1,000 of original principal amount (or for calendar quarters prior to 1992, per other specified unit) as determined under section 1272(a)(6) and the regulations thereunder for each accrual period any day of which is in the specified calendar quarter;

(vii) The length of the accrual period;

(viii) The adjusted issue price (as defined in section 1275(a)(4)(B)(ii)) of the REMIC regular interest or the collateralized debt obligation at the beginning of each accrual period any day of which is in the specified calendar quarter;

(ix) The information required by paragraph (f)(3) of this section;

(x) Information required to compute the accrual of market discount including, for calendar years after 1989, the information required by paragraphs (f)(2)(i)(G) or (f)(2)(ii)(K) of this section; and

(xi) For calendar quarters and calendar years after 1991, if the REMIC is a single class REMIC (as described in §1.67–3T (a)(2)(ii)(B)), the information described in §1.67–3T (f)(1) and (f)(3)(ii) (A) and (B).

(3) *Time and manner for providing information*—(i) *Manner of providing information*. The information specified in paragraph (e)(2) of this section may be provided as follows—

(A) By telephone;

(B) By written statement sent by first class mail to the address provided by the requesting party;

(C) By causing it to be printed in a publication generally read by and available to persons specified in paragraph (e)(4) and by notifying the requesting persons in writing or by telephone of the publication in which it will appear, the date of its appearance, and, if possible, the page upon which it appears; or

(D) By any other method agreed to by the parties. If the information is published, then the publication should also specify the date and, if possible, the page on which corrections, if any, will be printed.

(ii) *Time for furnishing the information*. Each REMIC or issuer of a collateralized debt obligation must furnish the information specified in paragraph (e)(2) of this section on or before the later of—

(A) The 30th day after the close of the calendar quarter for which the information was requested, or

(B) The day that is two weeks after the receipt of the request.

(4) *Persons entitled to request information*. The following persons may request the information specified in paragraph (e)(2) of this section with respect to a specified class of REMIC regular interests or collateralized debt obligations from a REMIC or issuer of a collateralized debt obligation in the manner prescribed in paragraph (e)(5) of this section—

(i) Any broker who holds on its own behalf or as a nominee any REMIC regular interest or collateralized debt obligation in the specified class,

(ii) Any middleman who is required to make an information return under section 6049 (a) and paragraph (b)(2) of this section and who holds as a nominee any REMIC regular interest or collateralized debt obligation in the specified class,

(iii) Any corporation or non-calendar year taxpayer who holds a REMIC regular interest or collateralized debt obligation in the specified class directly, rather than through a nominee,

(iv) Any other person specified in paragraphs (c)(9) through (15) of this section who holds a REMIC regular interest or collateralized debt obligation in the specified class directly, rather than through a nominee, or

(v) A representative or agent for a person specified in paragraphs (e)(4)(i), (ii), (iii) or (iv) of this section.

(5) *Manner of requesting information from the REMIC*. A requesting person

specified in paragraph (e)(4) of this section should obtain Internal Revenue Service Publication 938, Real Estate Mortgage Investment Conduit (REMIC) and Collateralized Debt Obligation Reporting Information (or other guidance published by the Internal Revenue Service). This publication contains a directory of REMICs and issuers of collateralized debt obligations. The requesting person can locate the REMIC or issuer from whom information is needed and request the information from the official or representative of the REMIC or issuer in the manner specified in the publication. The publication will specify either an address or an address and telephone number. If the publication provides only an address, the request must be made in writing and mailed to the specified address. Further, the request must specify the calendar quarters (*e.g.*, all calendar quarters in 1989) and the classes of REMIC regular interests or collateralized debt obligations for which information is needed.

(f) *Requirement of furnishing statement to recipient*—(1) *In general.* Every person filing a Form 1099 under section 6049 (a) and this section must furnish to the holder (the person whose identifying number is required to be shown on the form) a written statement showing the information required by paragraph (f)(2) of this section. The written statement provided by a REMIC must also contain the information specified in paragraph (f)(3) of this section.

(2) *Form of statement*—(i) *REMIC regular interests and collateralized debt obligations not issued with original issue discount.* For a REMIC regular interest or collateralized debt obligation issued without original issue discount, the written statement must specify for the calendar year the following information—

(A) The aggregate amount shown on Form 1099 to be included in income by that person for the calendar year;

(B) The name, address, and taxpayer identification number of the person required to furnish this statement;

(C) The name, address, and taxpayer identification number of the person who must include the amount of interest in gross income;

(D) A legend, including a statement that the amount is being reported to the Internal Revenue Service, that conforms to the legend on Form 1099, Copy B, For Recipient;

(E) The CUSIP number, account number, serial number, or other identifying number or information, of each REMIC regular interest or collateralized debt obligation, with respect to which a return is being made;

(F) All other items shown on Form 1099 for the calendar year; and

(G) Information necessary to compute accrual of market discount. For calendar years after 1989, this requirement is satisfied by furnishing to the holder for each accrual period during the year a fraction computed in the manner described in either paragraph (f)(2)(i)(G)(*1*) or (f)(2)(i)(G)(*2*) of this section. For calendar years after December 31, 1991, the REMIC or the issuer of the collateralized debt obligation must be consistent in the method used to compute this fraction.

(*1*) The numerator of the fraction equals the interest, other than original issue discount, allocable to the accrual period. The denominator of the fraction equals the interest, other than original issue discount, allocable to the accrual period plus the remaining interest, other than original issue discount, as of the end of that accrual period. The interest allocable to each accrual period and the remaining interest are calculated by taking into account events which have occurred before the close of the accrual period and the prepayment assumption, if any, determined as of the startup day (as defined in section 860G(a)(9)) of the REMIC or the issue date (as defined in section 1275(a)(2)) of the collateralized debt obligaiton that would be made in computing original issue discount if the debt instrument had been issued with original issue discount.

(*2*) If the REMIC regular interest or the collateralized debt obligation has de minimis original issue discount (as defined in section 1273(a)(3) and any regulations thereunder), then, at the option of the REMIC or the issuer of the collateralized debt obligation, the fraction may be computed in the manner specified in paragraph (f)(2)(ii)(K)

of this section taking into account the de minimis original issue discount.

(ii) *REMIC regular interests and collateralized debt obligations issued with original issue discount.* For a REMIC regular interest or collateralized debt obligation issued with original issue discount, the written statement must specify for the calendar year the following information—

(A) The aggregate amount of original issue discount includible in the gross income of the holder for the calendar year with respect to the REMIC regular interest or the collateralized debt obligation;

(B) The aggregate amount of interest, other than original issue discount, includible in the gross income of the holder for the calendar year with respect to the REMIC regular interest or the collateralized debt obligation;

(C) The name, address, and taxpayer identification number of the person required to file this form;

(D) The name, address, and taxpayer identification number of the person who must include the amount of interest specified in paragraphs (f)(2)(ii) (A) and (B) of this section in gross income;

(E) For calendar years after 1987, the daily portion of original issue discount per $1,000 of original principal amount (or for calendar years prior to 1992, per other specified unit) as determined under section 1272(a)(6) and the regulations thereunder for each accrual period any day of which is in that calendar year;

(F) For calendar years after 1987, the length of the accrual period;

(G) All other items shown on Form 1099 for the calendar year;

(H) A legend, including a statement that the information required under paragraphs (f)(2)(ii) (A), (B), (C), (D) and (G) of this section is being reported to the Internal Revenue Service, that conforms to the legend on Form 1099, Copy B, For Recipient;

(I) For calendar years after 1987, the adjusted issue price (as defined in section 1275(a)(4)(B)(ii)) of the REMIC regular interest or the collateralized debt obligation at the beginning of each accrual period with respect to which interest income is required to be reported on Form 1099 for the calendar year;

(J) The CUSIP number, account number, serial number, or other identifying number or information, of each class of REMIC regular interest or collateralized debt obligation, with respect to which a return is being made; and

(K) Information necessary to compute accrual of market discount. For calendar years after 1989, this information includes:

(*1*) For each accrual period in the calendar year, a fraction, the numerator of which equals the original issue discount allocable to that accrual period, and the denominator of which equals the original issue discount allocable to that accrual period plus the remaining original issue discount as of the end of that accrual period, and

(*2*) [Reserved]

The original issue discount allocable to each accrual period and the remaining original issue discount are calculated by taking into account events which have occurred before the close of the accrual period and the prepayment assumption determined as of the start-up day (as defined in section 860G (a)(9)) of the REMIC or the issue date (as defined in section 1275 (a)(2)) of the collateralized debt obligation.

(3) *Information with respect to REMIC assets*—(i) *95 percent asset test.* For calendar years after 1988, the written statement provided by a REMIC must also contain the following information for each calendar quarter—

(A) The percentage of REMIC assets that are qualifying real property loans under section 593,

(B) The percentage of REMIC assets that are assets described in section 7701 (a)(19), and

(C) The percentage of REMIC assets that are real estate assets defined in section 856 (c)(6)(B), computed by reference to the average adjusted basis (as defined in section 1011) of the REMIC assets during the calendar quarter (as described in §1.860F–4 (e)(1)(iii)). If for any calendar quarter the percentage of REMIC assets represented by a category is at least 95 percent, then the statement need only specify that the percentage for that category, for that calendar quarter, was at least 95 percent.

(ii) *Additional information required if the 95 percent test not met.* If, for any calendar quarter after 1988, less than 95 percent of the assets of the REMIC are real estate assets defined in section 856 (c)(6)(B), then, for that calendar quarter, the REMIC's written statement must also provide to any real estate investment trust (REIT) that holds a regular interest the following information—

(A) The percentage of REMIC assets described in section 856 (c)(5)(A), computed by reference to the average adjusted basis of the REMIC assets during the calendar quarter (as described in § 1.860F–4 (e)(1)(iii)),

(B) The percentage of REMIC gross income (other than gross income from prohibited transactions defined in section 860F (a)(2)) described in section 856 (c)(3)(A) through (E), computed as of the close of the calendar quarter, and

(C) The percentage of REMIC gross income (other than gross income from prohibited transactions defined in section 860F (a)(2)) described in section 856 (c)(3)(F), computed as of the close of the calendar quarter. For purposes of this paragraph (f)(3)(ii)(C), the term ''foreclosure property'' contained in section 856 (c)(3)(F) shall have the meaning specified in section 860G (a)(8).

In determining whether a REIT satisfies the limitations of section 856 (c)(2), all REMIC gross income is deemed to be derived from a source specified in section 856 (c)(2).

(iii) *Calendar years 1988 and 1989.* For calendar years 1988 and 1989, the percentage of assets required in paragraphs (f)(3)(i) and (ii) of this section may be computed by reference to the average fair market value of the assets of the REMIC during the calendar quarter (as described in § 1.860F–4 (e)(1)(iii)), instead of by reference to the average adjusted basis of the assets of the REMIC during the calendar quarter.

(4) *Cross-reference.* See § 1.67–3T (f)(2)(ii) for additional information that may be separately stated on the statement required by this paragraph (f) with respect to certain holders of regular interests in REMICs described in § 1.67–3T (a)(2)(ii).

(5) *Time for furnishing statements*—(i) *For calendar quarters and calendar years after 1988.* For calendar quarters and calendar years after 1988, each statement required under this paragraph (f) to be furnished to any person for a calendar year with respect to amounts includible as interest must be furnished to that person after April 30 of that year and on or before March 15 of the following year, but not before the final interest payment (if any) for the calendar year.

(ii) *For calendar quarters and calendar years prior to 1989*—(A) *In general.* For calendar quarters and calendar years prior to 1989, each statement required under this paragraph (f) to be furnished to any person for a calendar year with respect to amounts includible as interest must be furnished to that person after April 30 of that year and on or before January 31 of the following year, but not before the final interest payment (if any) for the calendar year.

(B) *Nominee reporting.* For calendar quarters and calendar years prior to 1989, each statement required under this paragraph (f) to be furnished by a nominee must be furnished to the actual owner of a REMIC regular interest or a collateralized debt obligation to which section 1272 (a)(6) applies on or before the later of—

(*1*) The 30th day after the nominee receives such information, or

(*2*) January 31 of the year following the calendar year to which the statement relates.

(6) *Special rules*—(i) *Copy of Form 1099 permissible.* The requirements of this paragraph (f) for the furnishing of a statement to any person, including the legend requirement of paragraphs (f)(2)(i)(D) and (f)(2)(ii)(H) of this section, may be met by furnishing to that person—

(A) A copy of the Form 1099 filed pursuant to paragraph (b)(2) of this section in respect of that person, plus a separate statement (mailed with the Form 1099) that contains the information described in paragraphs (f)(2)(i)(E) and (G), (f)(2)(ii)(E), (F), (I), and (K), (f)(3), and (f)(4) of this section, if applicable, or

(B) A substitute form that contains all the information required under this paragraph (f) and that complies with

any current revenue procedure concerning the reproduction of paper substitutes of Forms 1099 and the furnishing of substitute statements to forms recipients. The inclusion on the substitute form of the information specified in this paragraph (f) that is not required by the official Forms 1099 will not cause the substitute form to fail to meet any requirements that limit the information that may be provided with a substitute form.

(ii) *Statement furnished by mail.* A statement mailed to the last known address of any person shall be considered to be furnished to that person within the meaning of this section.

(7) *Requirement that nominees furnish information to corporations and certain other specified persons*—(i) *In general.* For calendar quarters and calendar years after 1988, every broker or middleman must provide in writing or by telephone the information specified in paragraph (e)(2) of this section to—

(A) A corporation,

(B) A non-calendar year taxpayer, or

(C) Any other person specified in paragraphs (c)(9) through (15) of this section

who requests the information and for whom the broker or middleman holds as a nominee a REMIC regular interest or a collateralized debt obligation. A corporation, non-calendar year taxpayer, or any other person specified in paragraphs (c)(9) through (15) of this section may request the information in writing or by telephone for any REMIC regular interest or collateralized debt obligation for calendar quarters any day of which the person held the interest or obligation.

(ii) *Time for furnishing information.* The statement required in paragraph (f)(7)(i) of this section must be furnished on or before the later of—

(A) The 45th day after receipt of the request,

(B) The 45th day after the close of the calendar quarter for which the information was requested, or

(C) If the request is made for the last calendar quarter in a year, March 15 of the year following the calendar quarter for which the information was requested.

[T.D. 8366, 56 FR 49518, Sept. 30, 1991; T.D. 8366, 57 FR 5054, Feb. 12, 1992, as amended by T.D. 8431, 57 FR 40322, Sept. 3, 1992; 57 FR 46243, Oct. 7, 1992; T.D. 8734, 62 FR 53491, Oct. 14, 1997; T.D. 8888, 65 FR 37702, June 16, 2000; T.D. 8895, 65 FR 50407, Aug. 18, 2000]

§ 1.6049–7T Market discount fraction reported with other financial information with respect to REMICs and collateralized debt obligations (temporary).

For purposes of § 1.6049–7(f)(2)(i)(G)(*1*) relating to the market discount fraction to be reported with other financial information with respect to REMICs and other collateralized debt obligations, if the REMIC regular interest or the collateralized debt obligation has de minimis original issue discount (as defined in section 1273(a)(3) and any regulations thereunder), then, at the option of the REMIC or the issuer of the collateralized debt obligation, a fraction computed in the manner specified in paragraph (f)(2)(ii)(K) of this section taking into account the de minimis original issue discount may be reported instead of the fraction specified in § 1.6049–7(f)(2)(i)(G)(*1*)(*i*). The REMIC or the issuer of the collateralized debt obligation, however, must be consistent in the method used to compute this fraction.

[T.D. 8366, 56 FR 49518, Sept. 30, 1991]

§ 1.6049–8 Interest and original issue discount paid to residents of Canada.

(a) *Interest subject to reporting requirement.* For purposes of §§ 1.6049–4, 1.6049–6 and this section and except as provided in paragraph (b) of this section, the term *interest* means interest paid to a Canadian nonresident alien individual after December 31, 1996, where the interest is described in section 871(i)(2)(A) with respect to a deposit maintained at an office within the United States. For purposes of the regulations under section 6049, a Canadian nonresident alien individual is an individual who resides in Canada and is not a United States citizen. The payor or middleman may rely upon the permanent residence address (as defined in section 1441 and the regulations under

that section) as stated on the Form W–8 (described in section 6049 and the regulations under that section) in order to determine whether the payment is made to a Canadian nonresident alien individual. The payor or middleman may rely upon the permanent residence address (as defined in § 1.1441–1(e)(2)(ii)) as stated on the Form W–8 described in § 1.1441–1(e)(2)(i) in order to determine whether the payment is made to a Canadian nonresident alien individual. If the permanent residence address stated on the certificate is in Canada, or if the payor has actual knowledge of the individual's residence address in Canada, the payor must presume that the individual resides in Canada. Amounts described in this paragraph (a) are not subject to backup withholding under section 3406. See § 31.3406(g)-1(d) of this chapter.

(b) *Interest excluded from reporting requirement*. The term *interest* does not include an amount that is paid by the issuer or its agent outside the United States with respect to an obligation that is described in paragraph (b) (1) or (2) of this section.

(1)(i) The obligation is not in registered form (within the meaning of section 163(f) and the regulations thereunder); is part of a larger single public offering of securities; and is described in section 163(f)(2)(B).

(ii) Unless it has actual knowledge to the contrary, a middleman may treat an obligation as if it is described in section 163(f)(2)(B) if the obligation or coupon therefrom, whichever is presented for payment, contains the statement described in section 163(f)(2)(B)(ii)(II) and the regulations thereunder.

(2)(i) The obligation has a face or principal amount of not less than $500,000, and satisfies the requirements described in paragraphs (b)(2)(i) (A), (B), and (C) of this section.

(A) The obligation satisfies the requirements of sections 163(f)(2)(B) (i) and (ii)(I) and the regulations thereunder (as if it were a registration-required obligation within the meaning of section 163(f)(2)(A)) and is issued in accordance with the procedures of § 1.163–5(c)(2)(i)(D)).

(B) If the obligation is in registered form, it is registered in the name of an exempt recipient described in § 1.6049–4(c)(1)(ii).

(C) The obligation has on its face and on any detachable coupons the following statement (or a similar statement having the same effect): ''By accepting this obligation or coupon, the holder represents and warrants that it is not a United States person (other than an exempt recipient described in the regulations under section 6049(b)(4) of the Internal Revenue Code and the regulations thereunder) and that it is not acting for or on behalf of a United States person (other than an exempt recipient described in the regulations under section 6049(b)(4) of the Internal Revenue Code and the regulations thereunder).''

(ii) Unless the middleman has actual knowledge to the contrary, it may treat an obligation as satisfying the requirements of sections 163(f)(2)(B) (i) and (ii)(I) and the regulations thereunder if the obligation or a coupon therefrom, whichever is presented for payment, contains the statement in paragraph (b)(2)(i)(C) of this section.

[T.D. 8664, 61 FR 17574, Apr. 22, 1996, as amended by T.D. 8734, 62 FR 53491, Oct. 14, 1997]

§ 1.6046A–1 Return requirement for United States persons who acquire or dispose of an interest in a foreign partnership, or whose proportional interest in a foreign partnership changes substantially.

(a) *Return requirement*—(1) *General rule*. If a United States person has a reportable event (as defined in paragraph (b)(1) of this section) during the person's tax year, then, except as provided in paragraph (f) of this section, the United States person is required to complete and file Form 8865, ''Return of U.S. Persons With Respect To Certain Foreign Partnerships,'' containing the information described in paragraph (c) of this section.

(2) *Separate return for each partnership*. If a United States person has a reportable event with respect to an interest in more than one foreign partnership, the United States person must file a separate Form 8865 for each foreign partnership.

(b) *Definitions*—(1) *Reportable event.* There are three categories of reportable events under section 6046A: acquisitions, dispositions, and changes in proportional interests.

(i) *Acquisitions.* A United States person that acquires a foreign partnership interest has a reportable event if—

(A) The person did not own a ten-percent or greater direct interest in the partnership and as a result of the acquisition the person owns a ten-percent or greater direct interest in the partnership. For purposes of this paragraph (b)(1)(i)(A), an acquisition includes an increase in a person's direct proportional interest; or

(B) Subject to paragraph (b)(2) of this section, compared to the person's direct interest when the person last had a reportable event, after the acquisition the person's direct interest has increased by at least a ten-percent interest.

(ii) *Dispositions.* A United States person that disposes of a foreign partnership interest has a reportable event if—

(A) The person owned a ten-percent or greater direct interest in the partnership before the disposition and as a result of the disposition the person owns less than a ten-percent direct interest. For purposes of this paragraph (b)(1)(ii)(A), a disposition includes a decrease in a person's direct proportional interest; or

(B) Subject to paragraph (b)(2) of this section, compared to the person's direct interest when the person last had a reportable event, after the disposition the person's direct interest has decreased by at least a ten-percent interest.

(iii) *Changes in proportional interests not otherwise reportable as acquisitions or dispositions under paragraph (b)(1)(i)(A) or (b)(1)(ii)(A) of this section.* A United States person has a reportable event if, subject to paragraph (b)(2) of this section, compared to the person's direct proportional interest the last time the person had a reportable event, the person's direct proportional interest has increased or decreased by at least the equivalent of a ten-percent interest.

(2) *Special rule for foreign partnership interests owned on December 31, 1999.* If a United States person owned a ten-percent or greater direct interest in a foreign partnership on December 31, 1999, then to determine whether the person has a reportable event under paragraph (b)(1)(i)(B), (b)(1)(ii)(B), or (b)(1)(iii) of this section, the comparison should be made to the person's direct interest on December 31, 1999. Once the person has a reportable event after December 31, 1999, future comparisons should be made by reference to the last reportable event.

(3) *Change in a proportional interest.* A partner's proportional interest in a foreign partnership may change for a number of reasons, for example, the change may be caused by changes in other partners' interests resulting from a partner withdrawing from the partnership. A proportional change may also occur by operation of the partnership agreement, for example, if the partnership agreement provides that a partner's interest in profits will change on a set date or when the partnership has earned a specified amount of profits and one of those events occurs.

(4) *Ten-percent interest.* Under section 6046A(d) and this section, a *ten-percent interest* in a foreign partnership, as described in section 6038(e)(3)(C) and the regulations thereunder, means an interest equal to ten percent of the capital interest in such partnership, an interest equal to ten percent of the profits interest in such partnership, or an interest to which ten percent of the deductions or losses of such partnership are allocated.

(5) *United States person. United States person* means a person described in section 7701(a)(30).

(6) *Foreign partnership. Foreign partnership* means any partnership that is a foreign partnership under sections 7701(a)(2) and (5).

(7) *Examples.* The rules of paragraph (a) of this section and this paragraph (b) are illustrated by the following examples:

Example 1. Acquisition of an indirect interest. FP, a foreign partnership, has two partners, *FC1* and *FC2*, both foreign corporations. *FC1* owns a 40% interest in *FP*, and *FC2* owns a 60% interest in *FP*. No United States person owns an interest in *FP*, either directly, or constructively under section 6038(e)(3)(C) and section 267(c). On January 1, 2001, *US*, a United States person and calendar year taxpayer, acquires by purchase 100% of *FC2's* stock. *US* has acquired an indirect interest of

60% in *FP*. See sections 6038(e)(3)(C) and 267(c)(1). However, *US* is not required to report the January 1, 2001 indirect acquisition under section 6046A. *US* did not own a 10% or greater direct interest in *FP* before the acquisition, and *US* does not own a 10% or greater direct interest as a result of the acquisition. (*US* must, however, comply with the reporting requirements under section 6038 (controlled foreign corporation and controlled foreign partnership reporting) with respect to *FC2* and *FP*.)

Example 2. Acquisition of direct interests. (i) Assume the same facts as *Example 1*. In addition, on June 1, 2001, *US* purchases a 5% direct interest in *FP* from *FC1*. *US* did not own a 10% or greater direct interest in *FP* before the acquisition. After the acquisition, *US* does not own a direct interest of 10% or more. *US* owns a 10% or greater total interest (direct and indirect), but only a 5% direct interest. Therefore, *US* is not required to report the June 1, 2001, acquisition under section 6046A.

(ii) On September 1, 2001, *US* purchases a 7% direct interest in *FP* from *FC1*. The September 1, 2001 acquisition constitutes a reportable event under paragraph (b)(1)(i)(A) of this section. Before the September 1 acquisition, US did not own a 10% or greater direct interest in *FP*. After the September 1 acquisition, *US* owns a 12% direct interest, and therefore, as a result of the September 1 acquisition, *US* now owns a 10% or greater direct interest in *FP*. Consequently, *US* must report its September 1 acquisition under section 6046A on Form 8865 filed with *US's* 2001 income tax return.

(iii) On December 1, 2001, *US* acquires an additional 4% direct interest in *FP* from *FC1*, so that *US's* total direct interest has increased from 12% to 16%. This acquisition does not constitute a reportable event. Compared to *US's* direct interest when *US* last had a reportable event (12% on September 1, 2001), after acquiring the 4% interest *US's* direct interest has not increased by at least a 10% direct interest (i.e., its direct interest increased by only 4%). Therefore, *US* does not have to report the December 1, 2001, acquisition under section 6046A. On April 1, 2002, *FC2* distributes a 6% direct interest in *FP* to *US*. *US* now owns a 22% direct interest in *FP*. Compared to *US's* direct interest when *US* last had a reportable event (12% on September 1, 2001), after the April 1 acquisition *US's* direct interest has increased by at least a 10% interest (12% to 22%). *US* must report the April 1, 2002 acquisition on a Form 8865 attached to *US's* 2002 income tax return.

Example 3. Change in proportional interest resulting from withdrawal of a partner. Assume the same facts as *Example 3*. In addition, on January 5, 2003, *FC2* withdraws entirely from *FP*. As a result, the direct interests of *US* and *FC1* in *FP* each increase by at least the equivalent of 10% interests. Compared to *US's* direct interest the last time *US* had a reportable event (22% on April 1, 2002), *US's* direct interest has increased by at least the equivalent of a ten percent interest. Therefore, *US* has had a reportable event pursuant to paragraph (b)(1)(iii) of this section, and *US* must report the change in its interest resulting from *FC2's* withdrawal from the partnership on *US's* Form 8865 filed with *US's* 2003 tax year income tax return.

Example 4. Change in proportional interest constituting an acquisition. *FP* is a foreign partnership that has no United States persons as direct or constructive partners. *US* is a United States person and a calendar year taxpayer. On January 1, 2001, *US* purchases an 8% direct interest in *FP*. *US* is not required to report this acquisition. US did not own a 10% or greater direct interest in *FP*, and *US* does not own a 10% or greater direct interest as a result of the acquisition. On March 1, 2001, *FC*, a foreign partner of *FP*, withdraws from *FP*, and as result, *US's* direct interest in *FP* increases by a 7% interest. The increase in *US's* direct interest is considered an acquisition of an interest under paragraph (b)(1)(i)(A) of this section. *US* did not own a 10% or greater direct interest in *FP* before *FC* withdrew, and as a result of the increase in *US's* direct interest because of *FC's* withdrawal from *FP*, *US* now owns a 10% or greater direct interest in *FP*. Therefore, *US* must report under section 6046A the increase in *US's* direct interest resulting from the withdrawal of *FC* from *FP* on Form 8865 filed with *US's* tax return for *US's* 2001 tax year.

(c) *Content of return*. The Form 8865 that must be filed under paragraph (a)(1) of this section must contain the following information in such form and manner and to the extent that Form 8865 and its instructions prescribe—

(1) The name, address, and taxpayer identification number of the United States person required to file the return;

(2) Information about other persons (foreign or domestic) whose interests in the foreign partnership the person reporting under section 6046A is considered to own under section 6038(e)(3)(C) and section 267(c);

(3) Information about all foreign entities that were disregarded as entities separate from their owners under §§ 301.7701–2 and 301.7701–3 of this chapter that were owned by the foreign partnership during the partnership's tax year ending with or within the tax year of the person filing Form 8865 pursuant to section 6046A;

(4) For each reportable event, the date of the event, the type of event (acquisition, disposition, or change in proportional interest), and the United States person's direct percentage interest in the foreign partnership immediately before and immediately after the event;

(5) The fair market value of the interest acquired or disposed of;

(6) Information about partnerships (foreign and domestic) in which the foreign partnership owned a direct interest, or a constructive interest of ten percent or more under sections 267(c)(1) and (5) and the regulations thereunder, during the partnership's tax year ending with or within the tax year of the person filing Form 8865 pursuant to section 6046A; and

(7) Any other information required to be submitted by Form 8865 and its instructions.

(d) *Time and manner for filing returns.* The Form 8865 must be filed with the timely filed (including extensions) income tax return of the United States person for the tax year in which the reportable event occurs. If the United States person is not required to file an income tax return for its tax year in which the reportable event occurs, but is required to file an information return for that year (for example, Form 1065, ''U.S. Partnership Return of Income,'' or Form 990, ''Return of Organization Exempt from Income Tax''), the United States person should attach the Form 8865 to its information return filed for that tax year.

(e) *Duplicate returns.* If required by the instructions to Form 8865, a duplicate Form 8865 (including attachments and schedules) must also be filed.

(f) *Persons excepted from filing return*—(1) *Section 6038B overlap.* If a United States person acquires an interest in a foreign partnership as a result of a section 721 contribution required to be reported under section 6038B, and the person properly reports the contribution under section 6038B, then the United States person is not required to report the acquisition of the partnership interest under section 6046A(a) should it constitute a reportable event under paragraph (b)(1) of this section. The acquisition will still constitute a reportable event for purposes of making future comparisons pursuant to paragraphs (b)(1)(i)(B), (b)(1)(ii)(B) and (b)(1)(iii) of this section. A person that fails to properly report the section 721 contribution under section 6038B and the regulations thereunder and that fails to properly report the acquisition of the partnership interest under section 6046A may be subject to the penalties applicable to a failure to comply with the requirements of section 6038B, as well as the penalties applicable for a failure to comply with the requirements of section 6046A. See paragraph (h) of this section for more information about the penalties for failure to comply with the requirements of section 6046A.

(2) *Trusts relating to state and local government employee retirement plans.* The return requirement of section 6046A does not apply to trusts relating to state and local government employee retirement plans, unless the instructions to Form 8865 provide otherwise.

(3) *Reporting under this section not required of partnerships excluded from the application of subchapter K.* The reporting requirements of this section will not apply to any United States person in respect of an eligible partnership as described in §1.761–2(a) in which that United States person is a partner, if such partnership has validly elected to be excluded from all of the provisions of subchapter K of chapter 1 of the Internal Revenue Code in the manner specified in §1.761–2(b)(2)(i), or is deemed to have elected to be excluded from all of the provisions of subchapter K of chapter 1 of the Internal Revenue Code in accordance with the provisions of §1.761–2(b)(2)(ii).

(4) *Exclusion for satellite organizations.* The return requirement of section 6046A does not apply to the International Telecommunications Satellite Organization (or a successor organization) or the International Maritime Satellite Organization (or a successor organization).

(g) *Method of reporting.* Except as otherwise provided on Form 8865, or the accompanying instructions, any amounts required to be reported under section 6046A and this section must be expressed in United States dollars, with a statement of the exchange rates

used. All statements required on or with Form 8865 pursuant to this section must be in English.

(h) *Penalties for violating section 6046A.* For penalties for violating section 6046A, see sections 6679 and 7203.

(i) *Statute of limitations.* For exceptions to the limitations on assessment in the event of a failure to provide information under section 6046A, see section 6501(c)(8).

(j) *Effective date.* This section applies to reportable events occurring after December 31, 1999. No reporting under section 6046A is required for reportable events occurring on or before December 31, 1999.

[T.D. 8851, 64 FR 72556, Dec. 28, 1999]

§ 1.6050A–1 Reporting requirements of certain fishing boat operators.

(a) *Requirement of reporting.* The operator of a boat on which one or more individuals during a calendar year performed services described in § 31.3121(b)(20)–1(a) shall make an information return on Form 1099–MISC for that calendar year. The return shall include the following information:

(1) The name and taxpayer identification number of each individual performing the services;

(2) The percentage of each individual's share of the catch of fish or other forms of aquatic life (hereinafter ''fish'');

(3) The percentage of the operator's share of the catch of fish;

(4) If the individual receives all or part of his share of the catch in kind, the type and weight of the share and, if it can be ascertained, the fair market value of his share;

(5) If the individual receives a share of the proceeds of the catch, the dollar amount received; and

(6) Any other information that is required by the form.

For purposes of this section, the term, ''boat operator'' means an employer (as defined in § 31.3121(d)–2) of an employee whose services are excepted from employment by section 3121(b)(20) and § 31.3121(b)(20)–1. The boat operator may make separate returns on Form 1099–MISC for each crew member for each voyage, or he may aggregate the information required by this paragraph for an individual for all or any part of a return period in which the type of catch (if required) and the percentage due the crew member remain the same.

(b) *Time and place for filing.* Returns required to be made under this section on Form 1099-MISC shall be filed with the Internal Revenue Service Center, designated in the instructions for Form 1099-MISC, on or before February 28 (March 31 if filed electronically) of the year following the calendar year in which the relevant services were performed.

(c) *Requirement of and time for furnishing statement*—(1) *requirement of furnishing statement.* Every person filing a Form 1099–MISC under this section shall furnish to the individual whose identifying number is (or should be) shown on the form a written statement showing the information required by paragraph (a) of this section. The requirement of the preceding sentence may be met by furnishing to the individual copy B of Form 1099–MISC or a reasonable facsimile of Form 1099–MISC that was filed pursuant to this section.

(2) *Time for furnishing statement.* Each statement required by this paragraph to be furnished to any individual for a calendar year shall be furnished on or before January 31 of the year following the calendar year for which the return was made.

(d) *Cross-reference to penalties.* For provisions relating to the penalty provided for failure to file timely a correct information return required under section 6050A(a) and § 1.6050A–1(a), see § 301.6721–1 of this chapter (Procedure and Administration Regulations). For provisions relating to the penalty provided for failure to furnish timely a correct payee statement required under section 6050A(b) and § 1.6050A–1(c), see § 301.6722–1 of this chapter. See § 301.6724–1 of this chapter for the waiver of a penalty if the failure is due to reasonable cause and is not due to willful neglect.

[T.D. 7716, 45 FR 57123, Aug. 27, 1980, as amended by T.D. 8734, 62 FR 53492, Oct. 14, 1997; T.D. 8895, 65 FR 50407, Aug. 18, 2000]

§ 1.6050B–1 Information returns by person making unemployment compensation payments.

For taxable years beginning after December 31, 1978, every person who makes payments of unemployment compensation (as defined in section 85 (c)) aggregating $10 or more to any individual during any calendar year shall file a Form 1099UC in accordance with the instructions to such form.

[T.D. 7705, 45 FR 46070, July 9, 1980]

§ 1.6050D–1 Information returns relating to energy grants and financing.

(a) *Requirement of reporting.* Every person who administers a Federal, State, or local program a principal purpose of which is to provide subsidized energy financing (as defined in section 23(c)(10)(C) and the regulations thereunder) or grants for projects designed to conserve or produce energy shall make an information return for each calendar year beginning after December 31, 1983. However, the preceding sentence shall not apply if none of the financing and grants provided under such program during the calendar year relate either to expenditures described in section 23(c)(1) or (2), relating to the residential energy credit, made by a taxpayer before January 1, 1986, with respect to a dwelling unit or to section 38 property (as defined in section 48 and the regulations thereunder). That return shall be made on Form 6497 or, in the case of taxable gants, on Form 1099-G. (The latter form is prescribed pursuant to section 6041 as well as section 6050D.) The return shall include the following information:

(1) The name, address, and taxpayer identification number of each taxpayer receiving financing or a grant made under such program during the calendar year with respect to either section 38 property or in the case of financing or a grant for energy conservation expenditures or renewable energy source expenditures made by the taxpayer before January 1, 1986, a dwelling unit that is located in the United States;

(2) The aggregate amount of financing and grants received by the taxpayer under the program during the calendar year,

(3) In the case of returns for financing or nontaxable grants, the name of the program under which the financing or grants are made; and

(4) Any other information that is required by the form.

For purposes of this section, the term ''person'' means the officer or employee having control of the program, or the person appropriately designated for purposes of section 6050D and this section.

(b) *Time and place for filing.* Returns required to be made under this section shall be filed with the Internal Revenue Service Center designated in the instructions for Form 6497 or 1099-G on or before the last day of February (March 31 if filed electronically) of the year following the calendar year for which the return is made.

(Secs. 6050D and 7805, Internal Revenue Code of 1954 (94 Stat. 259, 26 U.S.C. 6050D; 68A Stat. 917, 26 U.S.C. 7805))

[T.D. 8018, 50 FR 12532, Mar. 29, 1985, as amended by T.D. 8146, 52 FR 26673, July 16, 1987; T.D. 8895, 65 FR 50407, Aug. 18, 2000]

§ 1.6050E–1 Reporting of State and local income tax refunds.

(a) *Applicability.* Section 6050E and this section apply to any refund officer who, with respect to an individual, makes payments of refunds of State or local income taxes or allows credits or offsets with respect to such taxes aggregating $10 or more for such individual in any calendar year.

(b) *Definitions.* For purposes of this section.—

(1) The term *refund officer* means the officer or employee of a State or local taxing jurisdiction having control of payments of refunds or the allowance of credits or offsets, or the person approporiately designated for purposes of this section.

(2) The term *State* shall include the District of Columbia but shall not include the Commonwealth of Puerto Rico or any possession of the United States.

(3) The term *individual* shall not include an estate or trust.

(4) The term *credit or offset* means an overpayment of tax which, in lieu of being refunded to the taxpayer, is:

(i) Applied against an existing liability of the taxpayer,

(ii) Available for application against a future liability of the taxpayer, or

(iii) Otherwise used or available for use for the taxpayer's benefit.

(c) *Requirement of reporting*. Every refund officer described in paragraph (a) of this section shall make an information return in accordance with this section for each calendar year. An information return must be made even if the refund officer is not required to furnish a statement to the applicable taxpayer under paragraph (k)(2) of this section.

(d) *Prescribed Form*. Except as otherwise provided in paragraph (i) of this section, the information return required by paragraph (c) of this section shall be made on Forms 1096 and 1099.

(e) *Refunds involving different taxable years*. In the case of refunds paid or credits or offsets allowed during a calendar year with respect to two or more taxable years of an individual, a separate Form 1099 shall be filed with respect to each taxable year of the individual. Thus, if during calendar year 1983 a refund officer pays to an individual a refund of $15 with respect to that individual's taxable year ending in 1982 and $20 with respect to that individual's taxable year ending in 1981, a separate Form 1099 shall be filed for each of the two payments. If, instead, the refund with respect to the individual's taxable year ending in 1982 were $5 instead of $15, no return would be required for the payment of $5.

(f) *Information required*. The information required to be reported on Forms 1096 and 1099 includes the aggregate amount of refunds, credits, and offsets made or allowed during the calendar year with respect to the taxable year of the individual covered by the return; the name, address and taxpayer identification number of the individual with respect to whom such payment, credit, or offset was made or allowed; the taxable year covered by the return; and such other information as may be required by the forms. In addition, the nature of the tax is required to be indicated on the Form 1099 in any case where the refund, credit or offset is made or allowed with respect to a payment attributable to an income tax that applies exclusively to income from a trade or business and is not a tax of general application.

(g) *When credit or offset deemed allowed*. For purposes of a return of information under this section, a credit or offset is deemed to be allowed when the liability to pay or credit such amount is admitted by the State or local taxing jurisdiction. Thus, if an amount with respect to a taxpayer's 1982 taxable year is credited in 1983 to reduce the liability of the taxpayer to make estimated tax payments in 1983, it is reportable as a credit allowed in 1983. It is not reportable in the taxable year that gives rise to the refund, credit or offset.

(h) *Time and place for filing*. The returns required under this section for any calendar year shall be filed after September 30 of that calendar year, but not before the refund officer's final payment (or allowance of credit or offset) for the year, and on or before February 28 (March 31 if filed electronically) of the following year. Returns shall be filed with the appropriate Internal Revenue Service Center, the addresses of which are listed in the instructions for Forms 1099. For extensions of time for filing returns under this section, see § 1.6081–1.

(i) *Use of magnetic media and substitute forms*—(1) *Magnetic media*. A refund officer may be required to file the Forms 1099 required by this section on magnetic media or machine-readable paper forms. See section 6011(e) and applicable regulations and revenue procedures thereunder. If a refund officer is not required to file the Forms 1099 required by this section on magnetic media, the refund officer may request permission under applicable regulations and revenue procedures to submit the information required by this section on magnetic media.

(2) *Substitute forms*. A refund officer may prepare and use a form which contains provisions identical with those of Form 1096 if the refund officer complies with all revenue procedures relating to substitute Form 1096 in effect at that time. In addition, if a refund officer is not required to file the Forms 1099 required by this section on magnetic media or machine-readable paper forms, the refund officer may prepare

and use a form which contains provisions identical with those of Form 1099 if the refund officer complies with all revenue procedures relating to substitute Form 1099 in effect at that time.

(j) *Voluntary information exchange agreements.* The requirements of reporting information to the Internal Revenue Service under this section may be satisfied for any calendar year by submission of the information required under paragraph (f) of this section in accordance with the terms of a voluntary information exchange agreement between the State and the United States in effect during such year.

(k) *Requirement of furnishing statements to recipients*—(1) *In general.* Except as provided in paragraph (k)(2) of this section, every refund officer required to make a return of information under this section shall furnish to the individual whose identifying number is required to be shown on the return a written statement showing the aggregate amount shown on the information return of refunds, credits and offsets made or allowed to such individual with respect to each taxable year of the individual, the name of the State or local taxing jurisdiction paying such refund or allowing such credits or offsets, the taxable year giving rise to the refund, credit or offset and a legend stating that such amount is being reported to the Internal Revenue Service. The requirement of this paragraph may be met by furnishing to the individual a copy of the Form 1099 filed with respect to that individual provided that the form bears a legend stating that such amount is being reported to the Internal Revenue Service. For purposes of this paragraph, a statement shall be considered to be furnished to an individual if it is mailed to the individual at the individual's last known address.

(2) *Exception for nonitemizers.* A refund officer need not furnish a statement to an individual under paragraph (k)(1) of this section if the refund officer verifies that the individual did not claim itemized deductions for Federal income tax purposes for the taxable year giving rise to the refund, credit, or offset. This exception shall not apply, however, if the refund, credit, or offset is made or allowed with respect to a payment attributable to an income tax that applies exclusively to income from a trade or business and is not a tax of general application. For purposes of this paragraph (k)(2), verification shall be made solely from—

(i) The State or local income tax return, or

(ii) Information obtained through a voluntary information exchange agreement with the United States for the applicable taxable year.

(3) *Verification from the State or local income tax return.* A refund officer shall verify from the State or local income tax return that an individual did not claim itemized deductions for Federal income tax purposes for the applicable taxable year only if—

(i)(A) An individual who itemized deductions for Federal income tax purposes either must attach a copy of Schedule A of the individual's Federal income tax return to the State or local income tax return or must transcribe information from Schedule A of the individual's Federal income tax return on the State or local income tax return;

(B) The information contained on or transcribed from the Schedule A is required for the purpose of computing liability for the State or local income tax; and

(C) The omission of a copy of the Schedule A, or of the information required to be transcribed from the Schedule A, is consistent with the taxpayer's computation of tax on the State or local income tax return; or

(ii) Individuals are required to transcribe information from their Federal income tax return (other than from Schedule A) on the State or local income tax return for the purpose of computing liability for the State or local income tax and the information can be used to determine conclusively whether the taxpayer itemized deductions for Federal income tax purposes.

(4) *Example.* The provisions of paragraph (k)(3)(ii) of this section may be illustrated by the following example:

Example. State X asks for transcription of the following information on its 1983 income tax return from the taxpayer's 1983 Federal income tax return: Adjusted gross income; taxable income; and number of exemptions

claimed. The amount of adjusted gross income and the number of exemptions claimed on the Federal income tax return are taken into account in computing the liability for income tax under the laws of State X. The amount of taxable income transcribed from the Federal return, however, does not enter into the computation of liability for income tax under the laws of State X. Thus, this amount may not be taken into account by the refund officer of State X for purposes of verifying whether a taxpayer itemized deductions for Federal income tax purposes. Since the refund officer of State X will not be able to determine conclusively from the amount of adjusted gross income and the number of exemptions transcribed from the Federal return whether a taxpayer itemized deductions for Federal income tax purposes, the transcribed information does not meet the requirements of paragraph (k)(3)(ii) of this section.

(l) *Time for furnishing statements*—(1) *General rule*. The statement required under paragraph (k) of this section shall be furnished after December 31 of the year in which the refund is paid or credit or offset is allowed, and on or before January 31 of the following year.

(2) *Extensions of time*. For good cause shown upon written application of the refund officer, the service center director may grant an extension of time not exceeding 30 days in which to furnish statements under this paragraph. The application shall be addressed to the Service Center with which the Forms 1099 required under this section are required to be filed and shall contain a concise statement of the reasons for requesting the extension to aid the service center director in determining the period of the extension, if any, which will be granted. The application shall state at the top of the first page that it is made under this section and shall be signed by the refund officer. In general, the application shall be filed after September 30 of the year in which the refund is paid or credit or offset is allowed, and before January 15 of the following year.

(m) *Effective date*. This section applies to payments of refunds and credits and offsets allowed after December 31, 1982.

[T.D. 8052, 50 FR 37349, Sept. 13, 1985, as amended by T.D. 8895, 65 FR 50408, Aug. 18, 2000]

§ 1.6050H–0 Table of contents.

This section lists the major captions that appear in §§ 1.6050H–1 and 1.6050H–2.

§ 1.6050H–1 Information reporting of mortgage interest received in a trade or business from an individual.

(a) Information reporting requirement.
(1) Overview.
(2) Reporting requirement.
(3) Optional reporting.
(b) Qualified mortgage.
(1) In general.
(2) Mortgage.
(i) In general.
(ii) Transitional rule for certain obligations existing on December 31, 1984.
(iii) Transitional rule for certain obligations existing on December 31, 1987.
(3) Payor of record.
(4) Lender of record.
(c) Interest recipient.
(1) Trade or business requirement.
(2) Interest received or collected on behalf of another person.
(i) General rule.
(ii) Exception.
(3) Interest received in the form of points.
(i) In general.
(ii) If designation agreement is in effect.
(4) Governmental unit.
(5) Examples.
(d) Additional rules.
(1) Reporting by foreign person.
(2) Reporting with respect to nonresident alien individual.
(i) In general.
(ii) Nonresident alien individual status.
(3) Reporting by cooperative housing corporations.
(e) Amount of interest received on mortgage for calendar year.
(1) In general.
(2) Calendar year.
(i) In general.
(ii) De minimis rule.
(iii) Applicability to points.
(3) Certain interest not received on mortgage.
(i) Interest received from seller on payor of record's mortgage.
(ii) Interest received from governmental unit.
(4) Interest calculated under Rule of 78s method of accounting.
(f) Points treated as interest.
(1) General rule.
(2) Limitations.
(3) Special rule.
(i) Amounts paid directly by payor of record.
(ii) Examples.
(4) Construction loans.
(i) In general.

(ii) Limitation on refinancing of construction loans.
(5) Amounts paid to mortgage brokers.
(6) Effect on deduction of points.
(g) Effective date.
(1) In general.
(2) Points.

§ 1.6050H–2 Time, form, and manner of reporting interest received on qualified mortgage.

(a) Requirement to file return.
(1) Form of return.
(2) Information included on return.
(3) Reimbursements of interest on a qualified mortgage.
(4) Time and place for filing return.
(5) Use of magnetic media.
(b) Requirement to furnish statement.
(1) In general.
(2) Information included on statement.
(3) Statement furnished pursuant to Federal mortgage program.
(4) Copy of Form 1098 to payor of record.
(5) Furnishing statement with other information reports.
(6) Time and place for furnishing statement.
(c) Notice requirement for use of Rule of 78s method of accounting.
(1) In general.
(2) Time and manner.
(d) Reporting under designation agreement.
(1) In general.
(2) Qualified person.
(3) Designation agreement.
(4) Penalties.
(e) Penalty provisions.
(1) Returns and statements the due date for which (determined without regard for extensions) is after December 31, 1987, and before December 31, 1989.
(i) Failure to file return or to furnish statement.
(ii) Failure to furnish TIN.
(iii) Failure to include correct information.
(2) Returns and statements the due date for which (determined without regard for extensions) is after December 31, 1989.
(i) Failure to file return or to furnish statement.
(ii) Failure to furnish TIN.
(iii) Failure to include correct information.
(f) Requirement to request and to obtain TIN.
(1) In general.
(2) Manner of requesting TIN.
(g) Effective date.
(1) In general.
(2) Points.

[T.D. 8571, 59 FR 63250, Dec. 8, 1994]

§ 1.6050H–1 Information reporting of mortgage interest received in a trade or business from an individual.

(a) *Information reporting requirement*—(1) *Overview*. The information reporting requirements of section 6050H, this section, and § 1.6050H–2 apply to an interest recipient who receives at least $600 of interest on a qualified mortgage for a calendar year or who makes a reimbursement of interest described in § 1.6050H–2(a)(2)(iv). Paragraph (b) of this section defines qualified mortgage. Paragraph (c) of this section defines interest recipient. Paragraph (d) of this section contains additional rules relating to the reporting requirement for foreign persons, cooperative housing corporations, and nonresident alien individuals. Paragraph (e) of this section contains rules for determining the amount of interest received on a mortgage for a calendar year. Paragraph (f) of this section provides rules for determining when prepaid interest in the form of points is taken into account as interest for purposes of section 6050H, this section, and § 1.6050H–2.

(2) *Reporting requirement*. Except as otherwise provided in this section and § 1.6050H–2, an interest recipient that either receives at least $600 of interest on a qualified mortgage for a calendar year or makes reimbursements of interest described in § 1.6050H–2(a)(2)(iv) must, with respect to that interest—

(i) File an information return with the Internal Revenue Service; and

(ii) Furnish a statement to the payor of record on the mortgage.

(3) *Optional reporting*. An interest recipient may, but is not required to, report its receipt of less than $600 of interest on a qualified mortgage for a calendar year. Similarly, an interest recipient also may report reimbursements of interest on a qualified mortgage even if the reimbursements are not required to be reported by § 1.6050H–2(a)(2)(iv). An interest recipient that chooses, but is not required, to file a return as provided in this section and § 1.6050H–2(a) or to furnish a statement as provided in this section and § 1.6050H–2(b) is subject to the requirements of this section and § 1.6050H–2.

(b) *Qualified mortgage*—(1) *In general*. A mortgage is a qualified mortgage if

the payor of record on the mortgage is an individual, including an individual acting in a capacity as a sole proprietor of a business. A mortgage is not a qualified mortgage if the payor of record on the mortgage is not an individual (such as a trust, estate, partnership, association, company, or corporation), even though an individual is a co-borrower on the mortgage and all the trustees, beneficiaries, partners, members, or shareholders of the payor of record are individuals.

(2) *Mortgage*—(i) *In general.* Except as otherwise provided in paragraphs (b)(2)(ii) and (b)(2)(iii) of this section, an obligation is a mortgage if real property (regardless of where located) secures all or part of the obligation. An interest recipient must determine whether real property secures an obligation at the time the obligation is created or, if security is added or removed at a later time, at that later time. Real property includes a manufactured home as defined in section 25(e)(10). An obligation includes a line of credit or a credit card obligation. For purposes of this section and § 1.6050H–2, a borrower incurs a line of credit or credit card obligation when the borrower first has the right to borrow against the line of credit or credit card, whether the borrower actually borrows an amount at that time. An obligation will not fail to be treated as a mortgage solely because, under an applicable State or local homestead law or other debtor protection law in effect on August 16, 1986, the security interest is ineffective or the enforceability of the security interest is restricted.

(ii) *Transitional rule for certain obligations existing on December 31, 1984*—(A) *In general.* An obligation that existed on December 31, 1984, is not a mortgage if, at the time the payor of record incurred the obligation, the interest recipient reasonably classified the obligation as other than a mortgage, real property loan, real estate loan, or other similar type of obligation. A reasonable classification of an obligation must be consistent with industry practices and determined according to the purpose of the obligation, the property securing the obligation, and any other reasonable factor. For purposes of this paragraph (b)(2)(ii)(A), an obligation was not reasonably classified as other than a mortgage, real property loan, real estate loan, or other similar type of obligation if, at the time the payor of record incurred the obligation, more than one-half of the obligations in the particular class in which the obligation was classified were secured primarily by real property.

(B) *Examples.* The following examples illustrate the rules of paragraph (b)(2)(ii)(A) of this section:

Example (1). B offers an unsecured line of credit and a line of credit secured by real property. B separately markets the two credit lines, and they are governed by different terms and conditions. For accounting purposes, B classifies the two types of loans as a single class. For purposes of paragraph (b)(2)(ii)(A) of this section, the two types of loans are different classes of obligations.

Example (2). B operates a program to make loans to small businesses. Depending on the amount of the loan and the credit history of the borrower, B may or may not require security for the loan. If B requires security, it may consist of real or personal property. For accounting purposes, B classifies all of the loans within this program as a single class. For purposes of paragraph (b)(2)(ii)(A) of this section, all of the loans within this program may be classified as belonging to a single class.

(iii) *Transitional rule for certain obligations existing on December 31, 1987.* An obligation that was incurred after December 31, 1984, and that existed on December 31, 1987, is not a mortgage if the obligation is not primarily secured by real property.

(3) *Payor of record.* A payor of record on a mortgage is the person carried on the books and records of the interest recipient as the principal borrower on the mortgage. If the books and records of the interest recipient do not indicate which borrower is the principal borrower, the interest recipient must designate a borrower as the principal borrower.

(4) *Lender of record.* The lender of record is the person who, at the time the loan is made, is named as the lender on the loan documents and whose right to receive payment from the payor of record is secured by the payor of record's principal residence. An intention by the lender of record to sell or otherwise transfer the loan to a third party subsequent to the close of

the transaction will not affect the determination of who is the lender of record.

(c) *Interest recipient*—(1) *Trade or business requirement.* Except as provided in paragraph (c)(4) of this section, an interest recipient is a person that is engaged in a trade or business (whether or not the trade or business of lending money) and that, in the course of the trade or business, either receives interest on a mortgage or makes a reimbursement of interest on a qualified mortgage described in §1.6050H–2(a)(3). For purposes of this paragraph (c)(1), if a person holds a mortgage which was originated or acquired in the course of a trade or business, the interest on the mortgage is considered to be received in the course of that trade or business. For example, if real estate developer A lends money to individual B to enable B to purchase a house in a subdivision owned and developed by A, and B gives a mortgage to A for the loan, A is an interest recipient for interest received on the mortgage. Alternatively, if C, a person engaged in the trade or business of being a physician, lends money to individual D to enable D to purchase C's home, and D gives a mortgage to C for the loan, C is not an interest recipient for interest received on the mortgage, because C will not receive the interest in the course of the trade or business of being a physician.

(2) *Interest received or collected on behalf of another person*—(i) *General rule.* Except as otherwise provided in paragraph (c)(2)(ii) or (3) of this section, a person that, in the course of its trade or business, receives or collects interest on a mortgage on behalf of another person (e.g., the lender of record) is the interest recipient (the initial recipient) for the mortgage. In this case, the reporting requirement of paragraph (a) of this section does not apply to the transfer of interest from the initial recipient to the person for which the initial recipient receives or collects the interest. For example, if financial institution A collects interest on behalf of financial institution B, A is the initial recipient for the mortgage and is subject to the reporting requirements of section 6050H, and B is not required to report the interest received on the mortgage from A.

(ii) *Exception*—(A) *Scope of exception.* Paragraph (c)(2)(i) of this section does not apply for any period for which—

(*1*) An initial recipient does not possess the information needed to comply with the reporting requirement of paragraph (a) of this section; and

(*2*) The person for which the interest is received or collected would receive the interest in the course of its trade or business if the interest were paid directly to that person. For purposes of this paragraph (c)(2)(ii)(A)(*2*), if interest is received or collected on behalf of a person other than an individual, that person is presumed to receive interest in a trade or business.

(B) *Application of exception.* If the exception provided by this paragraph (c)(2)(ii) applies, the person for which the interest is received or collected is the interest recipient with respect to interest received or collected on the mortgage during the period described in this paragraph (c)(2)(ii).

(3) *Interest received in the form of points.* For purposes of this section and §1.6050H–2, in the case of prepaid interest received in the form of points (as defined in paragraph (f) of this section):

(i) *In general.* Except as provided in paragraph (c)(3)(ii) of this section, only the lender of record or a qualified person (as defined in §1.6050H–2(d)(2)) is treated as receiving the points. The lender of record or qualified person is treated as receiving all points paid directly by the payor of record in connection with the purchase of the principal residence.

(ii) *If designation agreement is in effect.* If a designation agreement is executed pursuant to §1.6050H–2(d) with respect to points, only the designated party under the agreement is treated as receiving points with respect to any mortgage to which the agreement applies. The designated party is treated as receiving all points with respect to any mortgage to which the agreement applies.

(4) *Governmental unit.* A governmental unit or an agency or instrumentality of a governmental unit that receives interest on a mortgage is an interest recipient without regard to the requirement of paragraph (c)(1) of

this section that the interest be received in the course of a trade or business. A governmental unit or an agency or instrumentality of a governmental unit that is an interest recipient must designate an officer or employee to satisfy the reporting requirements of paragraph (a) of this section.

(5) *Examples*. The following examples illustrate the rules of paragraph (c) of this section:

Example (1). Financial institution F collects mortgage interest on behalf of financial institution G and deposits the amount collected into G's account held with F. F possesses the information needed to comply with the reporting requirement of paragraph (a) of this section. F is the interest recipient for the mortgage. G is not required to report.

Example (2). The facts are the same as in example (1), except that F does not possess the information needed to comply with the reporting requirement. G, the person for which F collects the interest, is the interest recipient for the mortgage. F is not required to report.

Example (3). S, an individual, sells real property to another individual, P, and takes back a mortgage from P to finance the sale. S does not receive the interest in the course of a trade or business. B, a bank, collects P's payments of principal and interest on behalf of S and deposits that amount into an account held at the bank in S's name. B does not possess the information needed to comply with the reporting requirement of paragraph (a) of this section. B is the interest recipient for P's mortgage without regard to paragraph (c)(2)(ii) of this section, because S would not receive the interest in the course of a trade or business. S is not required to report.

Example (4). X collects mortgage interest on behalf of Y, who would receive the interest in the course of a trade or business. X possesses the information needed to comply with the reporting requirement of paragraph (a) of this section. On July 1, 1988, Z assumes X's interest collection responsibilities. Z does not possess the information needed to comply with the reporting requirement of paragraph (a) of this section. X is the interest recipient for interest received from January 1, 1988, through June 30, 1988. Because Z does not possess the requisite information and Y would receive the interest in the course of a trade or business, Y is the interest recipient for interest received from July 1, 1988, through December 31, 1988.

Example (5). On December 1, Borrower obtains from Lender funds with which to purchase an existing structure to be used as Borrower's principal residence. In connection with the mortgage, Lender charges Borrower $300 as points. Borrower pays this amount to Lender at closing using unborrowed funds. In addition, Lender receives from Borrower with respect to the mortgage $300 as interest (as determined under paragraph (e) of this section) other than points. Because Lender has received at least $600 in interest, including points, with respect to Borrower's mortgage during the calendar year, Lender must report the payments in accordance with paragraph (a) of this section and §1.6050H–2. Under those sections, Lender must separately state on the information return and the statement to Borrower the $300 received as interest (other than points) and the $300 received as points.

(d) *Additional rules*—(1) *Reporting by foreign person*. An interest recipient that is not a United States person (as defined in section 7701(a)(30)) must report interest received on a qualified mortgage only if it receives the interest—

(i) At a location in the United States, or

(ii) At a location outside the United States if the interest recipient is—

(A) A controlled foreign corporation (within the meaning of section 957(a)), or

(B) A person, 50 percent or more of the gross income of which, from all sources for the three-year period ending with the close of the taxable year preceding the receipt of interest (or for such part of the period as the person was in existence), was effectively connected with the conduct of a trade or business within the United States.

(2) *Reporting with respect to nonresident alien individual*—(i) *In general*. The reporting requirement of paragraph (a) of this section does not apply if—

(A) The payor of record is a nonresident alien individual, and

(B) Real property located in the United States does not secure the mortgage.

(ii) *Nonresident alien individual status*. For purposes of paragraph (d)(2)(i)(A) of this section, an interest recipient must apply the following documentary evidence rules to determine whether a payor of record is a nonresident alien individual:

(A) If interest is paid outside the United States, the interest recipient must satisfy the documentary evidence standard provided in §1.6049–5(c) with respect to the payor of record; and

(B) If interest is paid within the United States, the interest recipient must secure from the payor of record a Form W–8 or a substantially similar statement signed by the payor under penalty of perjury as described in §1.1441–1(e)(1).

For purposes of this paragraph (d)(2)(ii), the place of payment is the place where the payor of record completes the acts necessary to effect payment. An amount paid by transfer to an account maintained by an interest recipient in the United States or by mail to a United States address is considered to be paid within the United States.

(3) *Reporting by cooperative housing corporations.* For purposes of this section and §1.6050H–2, an amount received by a cooperative housing corporation from an individual tenant-stockholder that represents the tenant-stockholder's proportionate share of interest described in section 216(a)(2) is interest received on a qualified mortgage in the course of the cooperative housing corporation's trade or business. A cooperative housing corporation is an interest recipient with respect to each tenant-stockholder's proportionate share of interest and must report $600 or more of interest received from an individual tenant-stockholder. The terms ''cooperative housing corporation,'' ''tenant-stockholder,'' and ''tenant-stockholder's proportionate share'' are defined in section 216 and the regulations thereunder.

(e) *Amount of interest received on mortgage for calendar year*—(1) *In general.* For purposes of this section and §1.6050H–2, interest includes mortgage prepayment penalties and late charges other than late charges for a specific mortgage service. Interest also includes prepaid interest in the form of points (as defined in paragraph (f) of this section). Whether an interest recipient receives $600 or more of interest on a mortgage for a calendar year is determined on a mortgage-by-mortgage basis. An interest recipient need not aggregate interest received on all of the mortgages of a payor of record held by the interest recipient to determine whether the $600 threshold is met. Therefore, an interest recipient need not report interest of less than $600 received on a mortgage, even though it receives a total of $600 or more of interest on all of the mortgages of the payor of record for a calendar year.

(2) *Calendar year*—(i) *In general.* Except as otherwise provided in paragraph (e)(2)(ii) or (iii) of this section, the calendar year for which interest is received is the later of the calendar year in which the interest is received or the calendar year in which the interest properly accrues.

(ii) *De minimis rule.* An interest recipient may treat interest received during the current calendar year which properly accrues by January 15 of the subsequent calendar year as interest received for the current calendar year. For example, if an interest recipient receives a monthly interest payment on December 31, 1988, which includes interest accruing for the period December 5, 1988, to January 5, 1989, the interest recipient may treat the entire interest payment as received for 1988. If a portion of an interest payment received in a current calendar year accrues after January 15 of the subsequent calendar year, an interest recipient must report as interest received for the current calendar year only the portion that properly accrues by the end of the current calendar year. For example, if an interest recipient receives a monthly payment that includes interest accruing for the period December 20, 1988, through January 20, 1989, the interest recipient may not report as interest received for 1988 any interest accruing after December 31, 1988. The interest recipient must report the interest accruing after December 31, 1988, as received for calendar year 1989.

(iii) *Applicability to points.* Paragraphs (e)(2)(i) and (ii) of this section do not apply to prepaid interest in the form of points (as defined in paragraph (f) of this section). Points (as defined in paragraph (f) of this section) must be reported in the calendar year in which they are received.

(3) *Certain interest not received on mortgage*—(i) *Interest received from seller on payor of record's mortgage.* Interest received from a seller or a person related to a seller within the meaning of section 267(b) or section 707(b)(1) on a

payor of record's mortgage is not interest received on a mortgage. For example, interest is not received on a mortgage if a real estate developer deposits an amount in escrow with an interest recipient and advises it to draw on the account to pay interest on a payor of record's mortgage (e.g., a buy-down mortgage). Similarly, interest is not received on a mortgage if an interest recipient receives a lump sum from a real estatge developer for interest on a payor of record's mortgage.

(ii) *Interest received from governmental unit.* Interest received from a governmental unit or an agency or instrumentality of a governmental unit is not interest received on a mortgage. For example, interest is not received on a mortgage if received as a housing assistance payment from the Department of Housing and Urban Development on a mortgage insured under section 235 of the National Housing Act (12 U.S.C. 1701–1715z (1982 & Supp. 1983)). Except as otherwise provided in paragraph (e) (1) and (2) of this section, interest received on a mortgage is only the excess of interest received on the mortgage over interest received from a governmental unit or an agency or instrumentality of a governmental unit.

(4) *Interest calculated under Rule of 78s method of accounting.* An interest recipient permitted by Revenue Procedure 83–40, 1983–1, C.B. 774 (or other revenue procedure) to use the Rule of 78s method of accounting to calculate interest earned on a transaction may report as interest received on a mortgage interest earned on the transaction as calculated under the Rule of 78s method of accounting only if the interest recipient satisfies the notice requirement of § 1.6050H–2(c).

(f) *Points treated as interest*—(1) *General rule.* Subject to the limitations of paragraph (f)(2) of this section, an amount is deemed to be points paid in respect of indebtedness incurred in connection with the purchase of the payor of record's principal residence (points) for purposes of this section and § 1.6050H–2 to the extent that the amount—

(i) Is clearly designated on the Uniform Settlement Statement prescribed under the Real Estate Settlement Procedures Act of 1974, 12 U.S.C. 2601 et seq., (e.g., the Form HUD–1) as points incurred in connection with the indebtedness, for example *as loan origination fees* (including amounts so designated on Veterans Affairs (VA) and Federal Housing Administration (FHA) loans), *loan discount, discount points,* or *points*;

(ii) Is computed as a percentage of the stated principal amount of the indebtedness incurred by the payor of record;

(iii) Conforms to an established practice of charging points in the area in which the loan is issued and does not exceed the amount generally charged in the area;

(iv) Is paid in connection with the acquisition by the payor of record of a residence that is the principal residence of the payor of record and that secures the loan. For this purpose, the lender of record may rely on a signed written statement of the payor of record that states whether the proceeds of the loan are for the purchase of the mortgagor's principal residence; and

(v) Is paid directly by the payor of record.

(2) *Limitations.* An amount is not points for purposes of this section to the extent that the amount is—

(i) Paid in connection with indebtedness incurred for the improvement of a principal residence;

(ii) Paid in connection with indebtedness incurred to purchase or improve a residence that is not the payor of record's principal residence, such as a second home, vacation property, investment property, or trade or business property;

(iii) Paid in connection with a home equity loan or a line of credit, even though the loan is secured by the payor of record's principal residence;

(iv) Paid in connection with a refinancing loan (except as provided by paragraph (f)(4) of this section), including a loan incurred to refinance indebtedness owed by the borrower under the terms of a land contract, a contract for deed, or similar forms of seller financing;

(v) Paid in lieu of amounts that ordinarily are stated separately on the Form HUD–1, such as appraisal fees, inspection fees, title fees, attorney fees, and property taxes; or

(vi) Paid in connection with the acquisition of a principal residence, to the extent that the amount is allocable to indebtedness in excess of the aggregate amount that may be treated as acquisition indebtedness under section 163(h)(3)(B)(ii).

(3) *Special rule*—(i) *Amounts paid directly by payor of record.* For purposes of this section, an amount is considered *paid directly* by the payor of record if it is—

(A) Provided by the payor of record from funds that have not been borrowed from the lender of record for this purpose as part of the overall transaction. The amount provided may include amounts designated as down payments, escrow deposits, earnest money applied at the closing, and other funds actually paid over by the payor of record at or before the time of closing; or

(B) Paid as points (within the meaning of this paragraph (f)) on behalf of the payor of record by the seller. For this purpose, an amount paid as points to an interest recipient by the seller on behalf of the payor of record is treated as paid to the payor of record and then paid directly by the payor of record to the interest recipient.

(ii) *Examples.* The provisions of this paragraph (f) are illustrated by the following examples:

Example 1. Financed payment of points. Buyer purchases a principal residence for $100,000. There is a total of $7,000 in closing costs (exclusive of down payment) charged in connection with the sale. Of this amount, $3,000 is charged as points (within the meaning of paragraph (f) of this section). At closing, Buyer makes a down payment of $20,000 and provides unborrowed funds in the amount of $4,000 for the payment of various closing costs other than points. Buyer finances payment of the points by increasing the principal amount of the loan by $3,000. Seller makes no payments on Buyer's behalf. Because Buyer has provided at closing funds that have not been borrowed from the lender of record for this purpose in an amount at least equal to the amount charged as points in the transaction, the lender of record (or a qualified person) must report $3,000 as points in accordance with this section and § 1.6050H–2.

Example 2. Seller-paid points. Buyer purchases a principal residence for $100,000. There is a total of $7,000 in closing costs (exclusive of down payment) charged in connection with the sale. Of this amount, $3,000 is charged as points (within the meaning of this paragraph (f)). Seller agrees to pay all closing costs on behalf of Buyer, including the amount charged as points. Accordingly, the amount paid by Seller as points is treated as paid directly by Buyer, and the lender of record (or a qualified person) must report the $3,000 as points in accordance with this section and § 1.6050H–2.

(4) *Construction loans*—(i) *In general.* An amount paid in connection with indebtedness incurred to construct a residence, or to refinance indebtedness incurred to construct a residence, is deemed to be points for purposes of this section to the extent the amount—

(A) Is clearly designated on the loan documents as points incurred in connection with the indebtedness, for example, as *loan origination fees, loan discount, discount points,* or *points;*

(B) Is computed as a percentage of the stated principal amount of the indebtedness incurred by the payor of record;

(C) Conforms to an established practice of charging points in the area in which the loan is issued and does not exceed the amount generally charged in the area;

(D) Is paid in connection with indebtedness incurred by the payor of record to construct (or to refinance construction of) a residence that is to be used, when completed, as the principal residence of the payor of record;

(E) Is paid directly by the payor of record; and

(F) Is not allocable to indebtedness in excess of the aggregate amount that may be treated as acquisition indebtedness under section 163(h)(3)(B)(ii).

(ii) *Limitation on refinancing of construction loans.* Amounts paid in connection with refinancing indebtedness incurred to construct a residence are not treated as points to the extent they are allocable to indebtedness that exceeds the indebtedness incurred to construct the residence.

(5) *Amounts paid to mortgage brokers.* Amounts received directly or indirectly by a mortgage broker are treated as points under this paragraph (f) to the same extent the amounts would be so treated if they were paid to and retained by the lender of record, and must be reported by the lender of record in accordance with this section and § 1.6050H–2.

(6) *Effect on deduction of points.* This section and § 1.6050H–2 address only the information reporting requirements of section 6050H and do not affect a payor of record's deduction for any amount in accordance with applicable provisions of the Internal Revenue Code.

(g) *Effective date*—(1) *In general.* Except as provided in paragraph (g)(2) of this section, this section is effective for mortgage interest received after December 31, 1987. Section 1.6050H–1T contains rules for reporting mortgage interest received after December 31, 1984, and before January 1, 1988.

(2) *Points.* The reporting requirements of this section do not apply to prepaid interest received in the form of points before January 1, 1995. In addition, the inclusion of points in the determination of interest under paragraph (e)(1) of this section applies only to transactions occurring after December 31, 1994.

[T.D. 8191, 53 FR 12002, Apr. 12, 1988, as amended by T.D. 8571, 59 FR 63251, Dec. 8, 1994; T.D. 8734, 62 FR 53492, Oct. 14, 1997]

§ 1.6050H–1T Information reporting of mortgage interest received in a trade or business from individuals after 1985 and before 1988 (temporary).

The following questions and answers relate to the requirement of reporting mortgage interest under section 6050H of the Internal Revenue Code of 1954, as added by section 145 of the Tax Reform Act of 1984 (Pub. L. 98–369, 98 Stat. 685):

REQUIREMENT OF REPORTING

In general

Q–1: What does section 6050H provide with respect to the reporting of mortgage interest?

A–1: In general, section 6050H provides that an information return must be made by any person who is engaged in a trade or business and who, in the course of such trade or business, receives from any individual $600 or more of interest on any mortgage in a calender year. For purposes of this section—

(a) Any person who is engaged in a trade or business and who, in the course of such trade or business, receives interest on any mortgage is referred to as an ''interest recipient''; and

(b) Any individual who pays interest on any mortgage is referred to as a ''payor''.

Interest Subject To Reporting

Q–2: Does the reporting requirement apply to all interest received by an interest recipient?

A–2: No. The reporting requirement applies only to interest received from a payor on a mortgage (as defined in A–4 and A–5 of this section). The reporting requirement does not apply to interest received from a trust, estate, partnership, association, company, or corporation.

Q–3: Does the reporting requirement apply to any amount of mortgage interest received from a payor?

A–3: No. The reporting requirement applies only if $600 or more of interest is received from a payor on any mortgage in a calendar year. The $600 threshold is determined on an obligation by obligation basis. Therefore, if the interest received from a payor on an obligation is less than $600, reporting with respect to that interest is not required even if the total interest received from the payor on all obligations held by the interest recipient exceeds $600 in a calendar year.

Q–4: What is a mortgage, for purposes of this section and section 6050H, with respect to obligations in existence on December 31, 1984?

A–4: An obligation in existence on December 31, 1984, that is secured primarily by real property (regardless of whether the property is located inside or outside the United States) is a mortgage unless, at the time the obligation was incurred, the interest recipient reasonably classified such obligation as other than a mortgage, real property loan, real estate loan, or other similar type of obligation. (See A–12 of this section for rules relating to interest received by foreign persons.) For example, if an obligation incurred in 1980 was secured primarily by real property, but the interest recipient reasonably classified the obligation as a commercial loan because the proceeds were used to finance the payor's trade or business, the obligation is not considered a mortgage for purposes of this section and section 6050H. If, however, a majority of the obligations in a particular class are primarily secured by real property, it is not reasonable to classify such obligations as other than mortgages, real property loans, real estate loans, or other similar types of obligations; such obligations are, therefore, mortgages for purposes of section 6050H and this section. For purposes of this definition, real property includes stock in a cooperative housing corporation. A mortgage does not include a credit card obligation that is secured primarily by real property or a line of credit that is secured primarily by real property.

Q–5: What is a mortgage, for purposes of this section and section 6050H, with respect to obligations incurred after December 31, 1984?

A–5: With respect to obligations incurred after December 31, 1984, a mortgage is any obligation that is secured primarily by real property, regardless of whether the property is located inside or outside the United States. (See A–12 of this section for rules relating to interest received by foreign persons.) For purposes of this definition, real property includes stock in a cooperative housing corporation. A mortgage does not include a credit card obligation that is secured primarily by real property or a line of credit that is secured primarily by real property. The determination of whether a particular obligation is a mortgage shall be made without regard to the interest recipient's classification of that obligation. For example, if an obligation is secured primarily by real property, but the interest recipient classifies the obligation as a commercial loan because the proceeds are to be used to finance the payor's trade or business, the obligation is nevertheless a mortgage for purposes of this section and section 6050H.

Q–6: If the amount of interest received on a mortgage in a calendar year is less than the amount of interest due on the mortgage, what amount of interest must be reported under this section?

A–6: The amount of interest received must be reported. For example, assume that $800 of interest is payable in a calendar year but only $600 of interest is received in the calendar year. The amount of interest received ($600) must be reported under this section. Similarly, assume that an interest recipient accrues $900 of interest on a mortgage in a calendar year but only $800 of interest is payable and is received in the calendar year (resulting in a $100 increase in the unpaid balance of the loan). The amount of interest received ($800) must be reported under this section.

Q–7: If a payor remits 13 payments of interest on any mortgage in a calendar year, but the interest recipient receives only 12 payments in the calendar year, what amount should the interest recipient report?

A–7: The interest recipient should report the interest actually received in the calendar year. For example, if a payor mails the 13th payment on December 31 or a calendar year, and the interest recipient does not receive it until the following calendar year, the interest recipient should report only the 12 payments received in the calendar year.

Trade or Business Requirement

Q–8: Must an interest recipient be engaged in the trade or business of lending money to be subject to the reporting requirement of this section?

A–8: No. An interest recipient (other than a governmental unit, or any agency or instrumentality thereof) is subject to this reporting requirement if the interest recipient is engaged in any trade or business and, in the course of such trade or business, receives from an individual $600 or more of interest on any mortgage in a calendar year. For example, if A, a real estate developer, provides financing to B, an individual, to enable B to purchase a house in a subdivision owner and developed by A, and that house is the primary security for the financing, A is subject to this reporting requirement. Alternatively, if C, a physician, who is not engaged in any other trade or business, lends money to D to enable D to purchase C's home, C is not subject to the reporting requirement of this section because C will not receive the interest in the course of his sole trade or business of being a physician.

Q–9: How does the trade or business requirement apply to a governmental unit?

A–9: A governmental unit (or any agency or instrumentality thereof) which receives from a payor $600 or more of interest on any mortgage in a calendar year is subject to the reporting requirement without regard to the requirement that the money be received in the course of a trade or business. A governmental unit (or any agency or instrumentality thereof) that is subject to the reporting requirement must designate an officer or employee to make the return. The designated officer or employee must make the return in the form and manner prescribed by this section.

Treatment of Cooperative Housing Corporations

Q–10: How does this reporting requirement apply in the case of cooperative housing corporation?

A–10: For purposes of section 6050H and this section, a cooperative housing corporation (as defined in section 216) is treated as a person who is engaged in a trade or business and who, in the course of such trade or business, receives interest from its tenant-stockholders on a mortgage. Therefore, a cooperative housing corporation is required to report under section 6050H and this section.

Interest Received on Behalf of Another

Q–11: If, in the course of a trade or business, a person receives (collects) interest on behalf of another, who is required to report?

A–11: The person first receiving (collecting) the interest is required to report. For example, a servicing bank that receives $600 or more of mortgage interest in a calendar year from a payor on behalf of a lender is required to report the interest received under this section. No reporting is required under this section upon the transfer of the interest from the servicing bank to the lender for whom the interest was received.

Interest Received by Foreign Persons

Q–12: Must an interest recipient that is a foreign person report under section 6050H and this section?

A–12: An interest recipient that is a foreign person must report with respect to mortgage interest that is received at a location within the United States. In the case of interest received at locations outside the United States, an interest recipient that is a foreign person must report—

(a) If the foreign person is a controlled foreign corporation within the meaning of section 957(a); or

(b) If the foreign person is a corporation any interest received from which would be considered to be from sources within the United States under section 861(a)(1)(C) (without regard to whether the interest is paid or credited by a domestic branch of a foreign corporation engaged in the commercial banking business).

Multiple Borrowers

Q–13: When there is more than one borrower on a mortgage, must the interest recipient report with respect to each borrower?

A–13: No. The interest recipient must report only with respect to the payor of record (as defined in A–14 of this section) on the mortgage. The amount of interest subject to reporting is the full amount received by the interest recipient with respect to the mortgage during the calendar year.

Q–14: Who is a payor of record?

A–14: For purposes of this section, the payor of record is the individual carried on the books and records of the interest recipient as the principal borrower or the individual designated by the interest recipient as the payor of record.

Interest Paid by Third Parties

Q–15: If an interest recipient receives interest on a mortgage from a person other than the borrower, must the interest recipient report this amount as received from the borrower?

A–15: In general, yes. Except as otherwise provided in this A–15 and A–15a of this section, an interest recipient must report all amounts received on a borrower's mortgage as received from the borrower under section 6050H and this section. For example, assume that N is the borrower on a mortgage and that interest is received on the mortgage from N's mother. The interest that is received from N's mother on N's mortgage is reportable under section 6050H and this section as received from N. However, interest that is paid by a seller on a purchaser's mortgage shall not be reported under section 6050H and this section as received from the purchaser. For example, if a real estate developer deposits an amount in escrow with the interest recipient and advises the interest recipient to draw on the account to pay interest on a purchaser's mortgage, this interest is not reportable under section 6050H and this section. Similarly, if a real estate developer pays a lump sum to the interest recipient for interest on a purchaser's mortgage, this interest is not reportable under section 6050H and this section. In addition, amounts received by the interest recipient as housing assistance payments from the Department of Housing and Urban Development (''HUD'') on a borrower's mortgage that is insured under section 235 of the National Housing Act (12 U.S.C. 1701–1715z (1982 and Supp. 1983)) shall not be reported as interest received from the borrower. In such a case, therefore, only the amount of interest received on the mortgage that exceeds the amount of housing assistance payments received from HUD shall be reported.

Q–15a: If an interest recipient receives, with respect to a borrower's mortgage, an amount from a governmental unit, or any agency or instrumentality thereof (other than an amount received from HUD as described in A–15 of this section), should the interest recipient report the amount as received from the borrower?

A–15a: If the interest is received after December 31, 1986, it must be reported in the same manner as interest on mortgages with respect to which housing assistance payments are received from HUD, as described in A–15 of this section. If the interest is received before January 1, 1987, it may, but need not, be reported.

FORM AND MANNER OF RETURN

Form of Return

Q–16: What form must be used to make a return required by section 6050H and this section?

A–16: An interest recipient must make the return on Form 1098 (with Form 1096 as the transmittal form). The interest recipient may, however, prepare and use a form that contains provisions substantially similar to those of Forms 1096 and 1098 if that person complies with any revenue procedures relating to substitute Forms 1096 and 1098 in effect at that time. A separate return must be made for each mortgage with respect to which $600 or more of interest is received for a calendar year.

Information Included on Return

Q–17: What information must an interest recipient include on Form 1098?

A–17: An interest recipient must include the following information on the Form 1098:

(a) The name, address, and TIN (as defined in section 7701(a)) of the payor or payor of record;

(b) The name and address of the interest recipient;

(c) The amount of interest (not including points and other prepaid interest) received on the mortgage in the calendar year; and

(d) Any other information as may be required by Form 1098 or its instructions.

Time for Filing

Q–18: When must an interest recipient file the return or returns required by section 6050H and this section?

A–18: An interest recipient must file the return or returns on or before February 28 of the year following the calendar year in which the mortgage interest is received.

Place for Filing

Q–19: Where must the return or returns required under section 6050H and this section be filed?

A–19: The return or returns must be filed with the same Internal Revenue Service Center where other returns of the interest recipient are filed.

Use of Magnetic Media

Q–20: What rules apply with respect to the use of magnetic media?

A–20: Any return required under section 6050H and this section must be filed on magnetic media to the extent required by section 6011(e) and the regulations thereunder. Any person not required by section 6011(e) to file returns on magnetic media may request permission to do so. See §1.9101 for rules relating to permission to submit information on magnetic tape or other media. If a person required to file returns on magnetic media fails to do so, the penalty under section 6652 (failure to file an information return) applies.

REQUIREMENT OF FURNISHING STATEMENTS TO PAYORS

In General

Q–21: What statements are required to be furnished to payors under section 6050H and this section?

A–21: Any interest recipient required to make an information return under section 6050H must also furnish a statement to the payor or, if applicable, payor of record (see A–13 and A–14 of this section). For the date when the statement must be furnished, see A–26 of this section.

Q–22: Is the statement considered to be furnished to the payor or payor of record if it is mailed to him at his last known address?

A–22: Yes.

Q–23: If an interest recipient furnishes a statement required under a Federal mortgage program will the requirements of A–21 of this section be met?

A–23: Yes, if the statement furnished contains all the information required under A–24 of this section and is furnished to the payors or payors of record by the date required under A–26 of this section.

Information Included on Statement

Q–24: What information must be included on the statement required to be furnished to payors or payors of record under section 6050H and this section?

A–24: The statement must include the following information:

(a) The information required under A–17 of this section;

(b) A legend stating that the information is being reported to the Internal Revenue Service; and

(c) A legend stating that the amount reported on the statement is deductible by the payor for Federal income tax purposes only to the extent the payor actually paid the amount and was not reimbursed by another person.

Copy of Form 1098 to Payors

Q–25: Can an interest recipient meet the requirement to furnish a statement to a payor or payor of record by furnishing a copy of the Form 1098 filed with respect to that payor or payor of record?

A–25: Yes. The requirement of furnishing a statement may be met by furnishing to the payor or payor of record a copy of the Form 1098 containing the same information filed with the Service with respect to such payor, or a form that contains provisions substantially similar to those of Form 1098, provided that the form bears the legends described in A–24 of this section.

Time for Furnishing Statement

Q–26: When is a statement required to be furnished by an interest recipient to the payor or payor of record?

A–26: A statement is required to be furnished by the interest recipient to the payor or payor of record on or before January 31 of the year following the calendar year in which the mortgage interest is received.

PENALTIES

In General

Q–27: Are there any penalties for failing to comply with the requirements of section 6050H and this section?

A–27: Yes. The penalty for failing to make an information return with respect to a payor or payor of record is provided in section 6652. The penalty for failing to furnish a statement to a payor or payor of record is provided in section 6678.

Q–28: Are there any penalties for failing to furnish a TIN upon request?

A–28: Yes. Any payor or payor of record is subject to a $50 penalty by the Internal Revenue Service if such payor fails to furnish his TIN upon the request of an interest recipient. For rules relating to the requesting of TINs by interest recipients, see A–30 and A–31 of this section.

Q–29: Is an interest recipient subject to any penalties for failing to furnish the TIN of a payor or payor of record?

A–29: Yes. In general, the penalties provided under section 6676 will be assessed against interest recipients who fail to furnish to the Internal Revenue Service the TIN of a payor or payor of record. With respect to mortgages in existence on December 31, 1984, however, the interest recipient will not be subject to the section 6676 penalties if the interest recipient followed the rules of A–30 and A–31 of this section for requesting TINs and properly processed the responses.

Requesting TINS

Q–30: What rules apply with respect to the requesting of TINs by interest recipients?

A–30: With respect to obligations incurred after December 31, 1984, the interest recipient must take all reasonable steps to obtain the TIN of the payor or payor of record at the time the obligation is incurred. With respect to any mortgage for which the interest recipient does not have the TIN of the payor or payor of record in its accounting system, the interest recipient must request, at least once a year, the TIN of such payor.

The request for a TIN need not be in a separate mailing. The request may be included, for example, in the interest recipient's regular mailings of payment coupon booklets or annual statements. However, if the interest recipient makes no other mailings to the payor or payor of record during 1985 (or during the year in which the obligation is incurred for obligations incurred after 1985), then the interest recipient must request the TIN in a separate mailing.

Q–31: What form must the interest recipient use to request the TIN of a payor or a payor of record?

A–31: No particular form must be used to request the TIN. However, the request must be made on a separate piece of paper and the request must clearly notify the payor that the Internal Revenue Service requires the payor to furnish his TIN in order to verify any deduction for mortgage interest. The interest recipient must also notify such payor that he is subject to a $50 penalty, imposed by the Internal Revenue Service, if he fails to furnish his TIN.

Effective Date

Q–32: When is this section effective?

A–32: This section generally is effective for mortgage interest received after December 31, 1984, and before January 1, 1988. However, Q/A–15a of this section is effective for mortgage interest received after December 31, 1986, and before January 1, 1988.

(26 U.S.C. 6050H)

[T.D. 8047, 50 FR 33530, Aug. 20, 1985, as amended by T.D. 8191, 53 FR 12002, Apr. 12, 1988]

§ 1.6050H–2 Time, form, and manner of reporting interest received on qualified mortgage.

(a) *Requirement to file return*—(1) *Form of return.* An interest recipient must file a return required by § 1.6050H–1(a) on Form 1098 (with Form 1096 as the transmittal form). An interest recipient may use forms containing provisions substantially similar to those in Forms 1098 and 1096 if it complies with applicable revenue procedures relating to substitute Forms 1098 and 1096. An interest recipient must file a separate return for each qualified mortgage for which it receives $600 or more of interest for a calendar year.

(2) *Information included on return.* An interest recipient must include on Form 1098:

(i) The name, address, and taxpayer identification number (TIN) (as defined in section 7701(a)(41)) of the payor of record;

(ii) The name, address, and TIN of the interest recipient;

(iii) The amount of interest (other than points) required to be reported with respect to the qualified mortgage for the calendar year;

(iv) With respect to reimbursements of interest on a qualified mortgage (as discussed in paragraph (a)(3) of this section) made to the payor of record in the calendar year—

(A) Reimbursements aggregating $600 or more; and

(B) Reimbursements aggregating less than $600, but only if $600 or more of interest on the qualified mortgage is received in the calendar year from the payor of record;

(v) The amount of points paid directly by the payor of record (within the meaning of § 1.6050H–1(f)(3)) required to be reported with respect to the qualified mortgage for the calendar year; and

(vi) Any other information required by Form 1098 or its instructions.

Section 1.6050H–1(e) contains rules to determine the amount of interest received on a mortgage for a calendar year.

(3) *Reimbursements of interest on a qualified mortgage.* For purposes of paragraph (a)(2)(iv) of this section, a reimbursement of interest on a qualified mortgage is a reimbursement of an

amount received in a prior year that was required to be reported for that prior year under paragraph (a)(2)(iii) of this section by any interest recipient. Only the interest recipient that makes the reimbursement is required to report the reimbursement under this section. Form 1098 and the statement furnished to the payor of record under paragraph (b) of this section must not include any amount that constitutes interest on the reimbursement paid to the payor of record. Rules relating to the requirement to report interest on a reimbursement are, in the case of a person carrying on the banking business (or a middleman, as defined in §1.6049–4(f)(4), of a person carrying on the banking business), provided in section 6049 and the regulations thereunder, and, for other persons, provided in section 6041 and the regulations thereunder. Reimbursements of interest on a qualified mortgage (as described in this section) made in 1993 and subsequent calendar years must be reported on Form 1098 and statements furnished to payors of record. Reimbursements made prior to 1993 are not required to be reported.

(4) *Time and place for filing return.* An interest recipient must file a return required by this paragraph (a) on or before February 28 (March 31 if filed electronically) of the year following the calendar year for which it receives the mortgage interest. If no interest is required to be reported for the calendar year, but a reimbursement of interest on a qualified mortgage is required to be reported for the calendar year, then a return required by this paragraph (a) must be filed on or before February 28 (March 31 if filed electronically) of the year following the calendar year in which the reimbursement was made. An interest recipient must file the return required by paragraph (a) of this section with the IRS office designated in the instructions for Form 1098.

(5) *Use of magnetic media.* An interest recipient must file the return required by paragraph (a) of this section on magnetic media only if required by section 6011(e) and the regulations thereunder. An interest recipient not required by section 6011(e) to file returns on magnetic media may request permission to do so. Section 301.6011–2 contains rules relating to the use of magnetic media. A failure to file on magnetic media when required constitutes a failure to file an information return under section 6721.

(b) *Requirement to furnish statement*—(1) *In general.* An interest recipient that must file a return under paragraph (a) of this section must furnish a statement to the payor of record.

(2) *Information included on statement.* An interest recipient must include on the statement that it must furnish to a payor of record:

(i) The information required under paragraph (a)(2) of this section;

(ii) A legend that—

(A) Identifies the statement as important tax information that is being furnished to the IRS; and

(B) Notifies the payor of record that if the payor of record is required to file a return, a negligence penalty or other sanction may be imposed on the payor of record if the IRS determines that an underpayment of tax results because the payor of record overstated a deduction for this mortgage interest (if any) or understated income from this mortgage interest reimbursement (if any) on the payor of record's return;

(iii) A legend stating that the payor of record may be unable to deduct the full amount of mortgage interest reported on the statement; that limitations based on the cost and value of the property securing the mortgage may apply; and that the payor of record may only deduct mortgage interest to the extent it was incurred, actually paid by the payor of record, and not reimbursed by another person; and

(iv) With respect to any information required to be reported under paragraph (a)(2)(iv) of this section, an instruction providing that the amount of the reimbursement is not to be deducted and that the amount must be included in the gross income of the payor of record if the reimbursed interest was deducted by the payor of record in a prior year so as to reduce income tax.

(3) *Statement furnished pursuant to Federal mortgage program.* An interest recipient that furnishes a statement to a payor of record under a Federal mortgage program will satisfy the requirement of paragraph (b)(1) of this section

if the statement contains all the information and legends required by paragraph (b)(2) of this section and is furnished by the time and at the place required by paragraph (b)(6) of this section.

(4) *Copy of Form 1098 to payor of record.* An interest recipient will satisfy the requirement of paragraph (b)(1) of this section by furnishing to a payor of record a copy of Form 1098 (or a substitute statement that complies with applicable revenue procedures) containing all the information filed with the Internal Revenue Service and all the legends required by paragraph (b)(2) of this section by the time and at the place required by paragraph (b)(6) of this section.

(5) *Furnishing statement with other information reports.* An interest recipient may transmit the statement required by paragraph (b)(1) of this section to the payor of record with other information, including other information returns, as permitted by applicable revenue procedures.

(6) *Time and place for furnishing statement.* An interest recipient must furnish a statement required by paragraph (b)(1) of this section to a payor of record on or before January 31 of the year following the calendar year for which it receives the mortgage interest. If no mortgage interest is required to be reported for the calendar year, but a reimbursement of interest on a qualified mortgage is required to be reported for the calendar year, then the statement required by paragraph (b)(1) of this section must be furnished on or before January 31 of the year following the calendar year in which the reimbursement was made. The interest recipient will be considered to have furnished the statement to the payor of record if it mails the statement to the payor of record's last known address.

(c) *Notice requirement for use of Rule of 78s method of accounting*—(1) *In general.* An interest recipient seeking to report interest received on a mortgage under the Rule of 78s method of accounting as permitted under § 1.6050H–1(e)(4) must notify the payor of record that the Rule of 78s method of accounting was used to calculate interest received on the mortgage and that the payor of record may not deduct as interest the amount calculated under the Rule of 78s method of accounting unless the payor of record properly uses that method to determine interest deductions. The notice must state that the payor of record may use the Rule of 78s method of accounting to determine interest paid for Federal income tax purposes only for a self-amortizing consumer loan requiring level payments at regular intervals (at least annually) over no longer than a five-year period, with no balloon payment at the end of the loan term, and only when the loan agreement provides for use of the Rule of 78s method of accounting to determine interest earned. See Rev. Proc. 83–40, 1983–1 C.B. 774; Rev. Rul. 83–84, 1983–1 C.B. 97.

(2) *Time and manner.* An interest recipient must provide notice required by paragraph (c)(1) of this section to a payor of record on or with the statement required by paragraph (b) of this section. An interest recipient may provide notice on a separate paper or on the statement required by paragraph (b) of this section.

(d) *Reporting under designation agreement*—(1) *In general.* An interest recipient that receives or collects interest (including points) on a mortgage may designate a qualified person to satisfy the reporting requirements of paragraphs (a), (b), and (c) of this section. If a designated qualified person reports as permitted under this paragraph (d), it will satisfy the requirement of paragraph (a)(2)(ii) of this section by including on Form 1098 (and Form 1096) the name, address, and TIN of the designated qualified person.

(2) *Qualified person.* A qualified person is either—

(i) A trade or business with respect to which the interest recipient is under common control within the meaning of § 1.414(c)–2; or

(ii) A person who is named as the designee by the lender of record or by a qualified person (under paragraph (d)(2) of this section) in a designation agreement entered into in accordance with paragraph (d)(3) of this section, and who either was involved in the original loan transaction or is a subsequent purchaser of the loan.

(3) *Designation agreement.* An interest recipient that designates a qualified

person to satisfy the reporting requirements described in paragraphs (a), (b), and (c) of this section must make that designation in a written designation agreement. The designation agreement must identify the mortgage(s) and calendar years for which the designated qualified person must report, and must be signed by both the designator and designee. A designee may report an amount as having been paid directly by the payor of record (for purposes of paragraph (a)(2)(v) of this section) only if the designation agreement contains the designator's representation that it did not lend such amount to the payor of record as part of the overall transaction. The designator must retain a copy of the designation agreement for four years following the close of the calendar year in which the loan is made. The designation agreement need not be filed with the Internal Revenue Service.

(4) *Penalties*. A designated qualified person is subject to any applicable penalties provided in part II of subchapter B of chapter 68 of the Internal Revenue Code as if it were an interest recipient. A designator is relieved from liability for applicable penalties by designating a qualified person under the provisions of paragraph (d)(3) of this section. Paragraph (e) of this section describes applicable penalties.

(e) *Penalty provisions*—(1) *Returns and statements the due date for which (determined without regard for extensions) is after December 31, 1987, and before December 31, 1989*. For purposes of this paragraph (e)(1) only, all references to sections of the Internal Revenue Code refer to sections of the Internal Revenue Code of 1986, as amended on or before December 31, 1987.

(i) *Failure to file return or to furnish statement*. The section 6721 penalty applies to an interest recipient that fails to file a return required by paragraph (a) of this section with respect to a payor of record. The section 6722 penalty applies to an interest recipient that fails to furnish a statement required by paragraph (b) of this section to a payor of record.

(ii) *Failure to furnish TIN*. The section 6676 penalty may apply to an interest recipient that fails to furnish the TIN of a payor of record on a return required by paragraph (a) of this section. The section 6676 penalty may apply to an interest recipient that fails to request and to obtain the TIN of a payor of record under paragraph (f) of this section.

(iii) *Failure to include correct information*. The section 6723 penalty may apply to an interest recipient that fails to include correct information on a return required by paragraph (a) of this section or on a statement required by paragraph (b) of this section to be furnished to a payor of record.

(2) *Returns and statements the due date for which (determined without regard for extensions) is after December 31, 1989*—(i) *Failure to file return or to furnish statement*. The section 6721 penalty applies to an interest recipient that fails to file a return required by paragraph (a) of this section with respect to a payor of record. The section 6722 penalty applies to an interest recipient that fails to furnish a statement required by paragraph (b) of this section to a payor of record.

(ii) *Failure to furnish TIN*. The section 6721 penalty may apply to an interest recipient that fails to furnish the TIN of a payor of record on a return required by paragraph (a) of this section. The section 6721 penalty may apply to an interest recipient that fails to request and to obtain the TIN of a payor of record under paragraph (f) of this section.

(iii) *Failure to include correct information*. The section 6721 penalty may apply to an interest recipient that fails to include correct information on a return required by paragraph (a) of this section. The section 6722 penalty may apply to an interest recipient that fails to include correct information on a statement required by paragraph (b) of this section to be furnished to a payor record.

(f) *Requirement to request and to obtain TIN*—(1) *In general*. For obligations incurred after December 31, 1987, an interest recipient must make all reasonable efforts to obtain the TIN of a payor of record when the payor of record incurs the obligation. For example, an interest recipient may require a borrower to furnish a TIN during the mortgage approval or application process. If an interest recipient does not

maintain the TIN of a payor of record on a mortgage, whenever incurred, it must request the TIN at least annually and must process responses properly and promptly.

(2) *Manner of requesting TIN.* An interest recipient need not separately mail a request for a TIN. An interest recipient may include a request in its regular mailing of payment coupon booklets or annual statements. If an interest recipient makes no mailing to a payor of record during the year in which the payor of record incurs the obligation, it must request the TIN in a separate mailing. No particular form is required to request a TIN. Nevertheless, an interest recipient must make the request on a separate paper and must clearly notify a payor of record that the Internal Revenue Service requires the payor of record to furnish a TIN in order to verify any mortgage interest deduction. An interest recipient must notify a payor of record that failure to furnish a TIN subjects the payor of record to a $50 penalty imposed by the Internal Revenue Service. A request for a TIN made on Form W–9 satisfies the requirement of this paragraph (f)(2).

(g) *Effective date*—(1) *In general.* Except as provided in paragraph (g)(2) of this section, this section is effective for mortgage interest received after December 31, 1987. Section 1.6050H–1T contains rules for reporting mortgage interest received after December 31, 1984, and before January 1, 1988.

(2) *Points.* The reporting requirement of this section does not apply to prepaid interest in the form of points received before January 1, 1995.

[T.D. 8191, 53 FR 12005, Apr. 12, 1988, as amended by T.D. 8507, 58 FR 68753, Dec. 29, 1993; T.D. 8571, 59 FR 63253, Dec. 8, 1994; T.D. 8895, 65 FR 50408, Aug. 18, 2000]

§ 1.6050I–0 Table of contents.

This section lists the major captions that appear in §§ 1.6050I–1 and 1.6050I–2.

§ 1.6050I–1 Returns relating to cash in excess of $10,000 received in a trade or business.

(a) Reporting requirement.
(1) In general.
(2) Cash received for the account of another.
(3) Cash received by agents.
(i) General rule.
(ii) Exception.
(iii) Example.
(b) Multiple payments.
(1) Initial payment in excess of $10,000.
(2) Initial payment of $10,000 or less.
(3) Subsequent payments.
(4) Example.
(c) Meaning of terms.
(1) Cash.
(i) Amounts received prior to February 3, 1992.
(ii) Amounts received on or after February 3, 1992.
(iii) Designated reporting transaction.
(iv) Exception for certain loans.
(v) Exception for certain installment sales.
(vi) Exception for certain down payment plans.
(vii) Examples.
(2) Consumer durable.
(3) Collectible.
(4) Travel or entertainment activity.
(5) Retail sale.
(6) Trade or business.
(7) Transaction.
(8) Recipient.
(d) Exceptions to the reporting requirements of section 6050I.
(1) Receipt of cash by certain financial institutions.
(2) Receipt of cash by certain casinos having gross annual gaming revenue in excess of $1,000,000.
(i) In general.
(ii) Casinos exempt under 31 CFR 103.45(c).
(iii) Reporting of cash received in a nongaming business.
(iv) Example.
(3) Receipt of cash not in the course of the recipient's trade or business.
(4) Receipt is made with respect to a foreign cash transaction.
(i) In general.
(ii) Example.
(e) Time, manner, and form of reporting.
(1) Time of reporting.
(2) Form of reporting.
(3) Manner of reporting.
(i) Where to file.
(ii) Verification.
(iii) Retention of returns.
(f) Requirement of furnishing statements.
(1) In general.
(2) Form of statement.
(3) When statement is to be furnished.
(g) Cross-reference to penalty provisions.
(1) Failure to file correct information return.
(2) Failure to furnish correct statement.
(3) Criminal penalties.

§ 1.6050I–2 Returns relating to cash in excess of $10,000 received as bail by court clerks.

(a) Reporting requirement.
(b) Meaning of terms.
(c) Time, form, and manner of reporting.
(1) Time of reporting.

(i) In general.
(ii) Multiple payments.
(2) Form of reporting.
(3) Manner of reporting.
(i) Where to file.
(ii) Verification of identity.
(d) Requirement to furnish statements.
(1) Information to Federal prosecutors.
(i) In general.
(ii) Form of statement.
(2) Information to payors of bail.
(i) In general.
(ii) Form of statement.
(iii) Aggregate amount.
(e) Cross-reference to penalty provisions.
(f) Effective date.

[T.D. 8652, 61 FR 7, Jan. 2, 1996]

§ 1.6050I–1 Returns relating to cash in excess of $10,000 received in a trade or business.

(a) *Reporting requirement*—(1) *In general*. Any person (as defined in section 7701(a)(1)) who, in the course of a trade or business in which such person is engaged, receives cash in excess of $10,000 in 1 transaction (or 2 or more related transactions) shall, except as otherwise provided, make a return of information with respect to the receipt of cash.

(2) *Cash received for the account of another*. Cash in excess of $10,000 received by a person for the account of another must be reported under this section. Thus, for example, a person who collects delinquent accounts receivable for an automobile dealer must report with respect to the receipt of cash in excess of $10,000 from the collection of a particular account even though the proceeds of the collection are credited to the account of the automobile dealer (*i.e.*, where the rights to the proceeds from the account are retained by the automobile dealer and the collection is made on a fee-for-service basis).

(3) *Cash received by agents*—(i) *General rule*. Except as provided in paragraph (a)(3)(ii) of this section, a person who in the course of a trade or business acts as an agent (or in some other similar capacity) and receives cash in excess of $10,000 from a principal, must report the receipt of cash under this section.

(ii) *Exception*. An agent who receives cash from a principal and uses all of the cash within 15 days in a cash transaction (the ''second cash transaction'') which is reportable under section 6050I or 5312 of title 31 of the United States Code and the regulations thereunder (31 CFR Part 103), and who discloses the name, address, and taxpayer identification number of the principal to the recipient in the second cash transaction need not report the initial receipt of cash under this section. An agent will be deemed to have met the disclosure requirements of this paragraph (a)(3)(ii) if the agent discloses only the name of the principal and the agent knows that the recipient has the principal's address and taxpayer identification number.

(iii) *Example*. The following example illustrates the application of the rules in paragraphs (a)(3) (i) and (ii) of this section:

Example. B, the principal, gives D, an attorney, $75,000 in cash to purchase real property on behalf of B. Within 15 days D purchases real property for cash from E, a real estate developer, and discloses to E, B's name, address, and taxpayer identification number. Because the transaction qualifies for the exception provided in paragraph (a)(3)(ii) of this section, D need not report with respect to the initial receipt of cash under this section. The exception does not apply, however, if D pays E by means other than cash, or effects the purchase more than 15 days following receipt of the cash from B, or fails to disclose B's name, address, and taxpayer identification number (assuming D does not know that E already has B's address and taxpayer identification number), or purchases the property from a person whose sale of the property is not in the course of that person's trade or business. In any such case, D is required to report the receipt of cash from B under this section.

(b) *Multiple payments*. The receipt of multiple cash deposits or cash installment payments (or other similar payments or prepayments) on or after January 1, 1990, relating to a single transaction (or two or more related transactions), is reported as set forth in paragraphs (b)(1) through (b)(3) of this section.

(1) *Initial payment in excess of $10,000*. If the initial payment exceeds $10,000, the recipient must report the initial payment within 15 days of its receipt.

(2) *Initial payment of $10,000 or less*. If the initial payment does not exceed $10,000, the recipient must aggregate the initial payment and subsequent payments made within one year of the initial payment until the aggregate amount exceeds $10,000, and report with

respect to the aggregate amount within 15 days after receiving the payment that causes the aggregate amount to exceed $10,000.

(3) *Subsequent payments*. In addition to any other required report, a report must be made each time that previously unreportable payments made within a 12-month period with respect to a single transaction (or two or more related transactions), individually or in the aggregate, exceed $10,000. The report must be made within 15 days after receiving the payment in excess of $10,000 or the payment that causes the aggregate amount received in the 12-month period to exceed $10,000. (If more than one report would otherwise be required for multiple cash payments within a 15-day period that relate to a single transaction (or two or more related transactions), the recipient may make a single combined report with respect to the payments. The combined report must be made no later than the date by which the first of the separate reports would otherwise be required to be made.) A report with respect to payments of $10,000 or less that are reportable under this paragraph (b)(3) and are received after December 31, 1989, but before July 10, 1990, is due July 24, 1990.

(4) *Example*. The following example illustrates the application of the rules in paragraphs (b)(1) through (b)(3) of this section:

Example. On January 10, 1991, M receives an initial cash payment of $11,000 with respect to a transaction. M receives subsequent cash payments with respect to the same transaction of $4,000 on February 15, 1991, $6,000 on March 20, 1991, and $12,000 on May 15, 1991. M must make a report with respect to the payment received on January 10, 1991, by January 25, 1991. M must also make a report with respect to the payments totalling $22,000 received from February 15, 1991, through May 15, 1991. This report must be made by May 30, 1991, that is, within 15 days of the date that the subsequent payments, all of which were received within a 12-month period, exceeded $10,000.

(c) *Meaning of terms*. The following definitions apply for purposes of this section—

(1) *Cash*—(i) *Amounts received prior to February 3, 1992*. For amounts received prior to February 3, 1992, the term *cash* means the coin and currency of the United States or of any other country, which circulate in and are customarily used and accepted as money in the country in which issued.

(ii) *Amounts received on or after February 3, 1992*. For amounts received on or after February 3, 1992, the term *cash* means—

(A) The coin and currency of the United States or of any other country, which circulate in and are customarily used and accepted as money in the country in which issued; and

(B) A cashier's check (by whatever name called, including ''treasurer's check'' and ''bank check''), bank draft, traveler's check, or money order having a face amount of not more than $10,000—

(*1*) Received in a designated reporting transaction as defined in paragraph (c)(1)(iii) of this section (except as provided in paragraphs (c)(1)(iv), (v), and (vi) of this section), or

(*2*) Received in any transaction in which the recipient knows that such instrument is being used in an attempt to avoid the reporting of the transaction under section 6050I and this section.

(iii) *Designated reporting transaction*. A designated reporting transaction is a retail sale (or the receipt of funds by a broker or other intermediary in connection with a retail sale) of—

(A) A consumer durable,

(B) A collectible, or

(C) A travel or entertainment activity.

(iv) *Exception for certain loans*. A cashier's check, bank draft, traveler's check, or money order received in a designated reporting transaction is not treated as cash pursuant to paragraph (c)(l)(ii)(B)(*1*) of this section if the instrument constitutes the proceeds of a loan from a bank (as that term is defined in 31 CFR part 103). The recipient may rely on a copy of the loan document, a written statement from the bank, or similar documentation (such as a written lien instruction from the issuer of the instrument) to substantiate that the instrument constitutes loan proceeds.

(v) *Exception for certain installment sales*. A cashier's check, bank draft, traveler's check, or money order received in a designated reporting transaction is not treated as cash pursuant

to paragraph (c)(1)(ii)(B)(*1*) of this section if the instrument is received in payment on a promissory note or an installment sales contract (including a lease that is considered to be a sale for Federal income tax purposes). However, the preceding sentence applies only if—

(A) Promissory notes or installment sales contracts with the same or substantially similar terms are used in the ordinary course of the recipient's trade or business in connection with sales to ultimate consumers; and

(B) The total amount of payments with respect to the sale that are received on or before the 60th day after the date of the sale does not exceed 50 percent of the purchase price of the sale.

(vi) *Exception for certain down payment plans.* A cashier's check, bank draft, traveler's check, or money order received in a designated reporting transaction is not treated as cash pursuant to paragraph (c)(1)(ii)(B)(*1*) of this section is the instrument is received pursuant to a payment plan requiring one or more down payments and the payment of the balance of the purchase price by a date no later than the date of the sale (in the case of an item of travel or entertainment, a date no later than the earliest date that any item of travel or entertainment pertaining to the same trip or event is furnished). However, the preceding sentence applies only if—

(A) The recipient uses payment plans with the same or substantially similar terms in the ordinary course of its trade or business in connection with sales to ultimate consumers; and

(B) The instrument is received more than 60 days prior to the date of the sale (in the case of an item of travel or entertainment, the date on which the final payment is due).

(vii) *Examples.* The following examples illustrate the definition of ''cash'' set forth in paragraphs (c)(l)(ii) through (vi) of this section.

Example 1. D, an individual, purchases gold coins from M, a coin dealer, for $13,200. D tenders to M in payment United States currency in the amount of $6,200 and a cashier's check in the face amount of $7,000 which D had purchased. Because the sale is a designated reporting transaction, the cashier's check is treated as cash for purposes of section 6050I and this section. Therefore, because M has received more than $10,000 in cash with respect to the transaction, M must make the report required by section 6050I and this section.

Example 2. E, an individual, purchases an automobile from Q, an automobile dealer, for $11,500. E tenders to Q in payment United States currency in the amount of $2,000 and a cashier's check payable to E and Q in the amount of $9,500. The cashier's check constitutes the proceeds of a loan from the bank issuing the check. The origin of the proceeds is evident from provisions inserted by the bank on the check that instruct the dealer to cause a lien to be placed on the vehicle as security for the loan. The sale of the automobile is a designated reporting transaction. However, under paragraph (c)(1)(iv) of this section, because E has furnished Q documentary information establishing that the cashier's check constitutes the proceeds of a loan from the bank issuing the check, the cashier's check is not treated as cash pursuant to paragraph (c)(1)(ii)(B)(*1*) of this section.

Example 3. F, an individual, purchases an item of jewelry from S, a retail jeweler, for $12,000. F gives S traveler's checks totalling $2,400 and pays the balance with a personal check payable to S in the amount of $9,600. Because the sale is a designated reporting transaction, the traveler's checks are treated as cash for purposes of section 6050I and this section. However, because the personal check is not treated as cash for purposes of section 6050I and this section, S has not received more than $10,000 in cash in the transaction and no report is required to be filed under section 6050I and this section.

Example 4. G, an individual, purchases a boat from T, a boat dealer, for $16,500. G pays T with a cashier's check payable to T in the amount of $16,500. The cashier's check is not treated as cash because the face amount of the check is more than $10,000. Thus, no report is required to be made by T under section 6050I and this section.

Example 5. H, an individual, arranges with W, a travel agent, for the chartering of a passenger aircraft to transport a group of individuals to a sports event in another city. H also arranges with W for hotel accommodations for the group and for admission tickets to the sports event. In payment, H tenders to W money orders which H had previously purchased. The total amount of the money orders, none of which individually exceeds $10,000 in face amount, exceeds $10,000. Because the transaction is a designated reporting transaction, the money orders are treated as cash for purposes of section 6050I and this section. Therefore, because W has received more than $10,000 in cash with respect to the transaction, W must make the report required by section 6050I and this section.

(2) *Consumer durable*. The term *consumer durable* means an item of tangible personal property of a type that is suitable under ordinary usage for personal consumption or use, that can reasonably be expected to be useful for at least 1 year under ordinary usage, and that has a sales price of more than $10,000. Thus, for example, a $20,000 automobile is a consumer durable (whether or not it is sold for business use), but a $20,000 dump truck or a $20,000 factory machine is not.

(3) *Collectible*. The term *collectible* means an item described in paragraphs (A) through (D) of section 408(m)(2) (determined without regard to section 408(m)(3)).

(4) *Travel or entertainment activity*. The term *travel or entertainment activity* means an item of travel or entertainment (within the meaning of § 1.274–2(b)(1)) pertaining to a single trip or event where the aggregate sales price of the item and all other items pertaining to the same trip or event that are sold in the same transaction (or related transactions) exceeds $10,000.

(5) *Retail sale*. The term *retail sale* means any sale (whether for resale or for any other purpose) made in the course of a trade or business if that trade or business principally consists of making sales to ultimate consumers.

(6) *Trade or business*. The term *trade or business* has the same meaning as under section 162 of the Internal Revenue Code of 1954.

(7) *Transaction*—(i) The term *transaction* means the underlying event precipitating the payer's transfer of cash to the recipient. Transactions include (but are not limited to) a sale of goods or services; a sale of real property; a sale of intangible property; a rental of real or personal property; an exchange of cash for other cash; the establishment or maintenance of or contribution to a custodial, trust, or escrow arrangement; a payment of a preexisting debt; a conversion of cash to a negotiable instrument; a reimbursement for expenses paid; or the making or repayment of a loan. A transaction may not be divided into multiple transactions in order to avoid reporting under this section.

(ii) The term *related transactions* means any transaction conducted between a payer (or its agent) and a recipient of cash in a 24-hour period. Additionally, transactions conducted between a payer (or its agent) and a cash recipient during a period of more than 24 hours are related if the recipient knows or has reason to know that each transaction is one of a series of connected transactions.

(iii) The following examples illustrate the definition of paragraphs (c)(7)(i) and (ii).

Example (1). A person has a tacit agreement with a gold dealer to purchase $36,000 in gold bullion. The $36,000 purchase represents a single transaction under paragraph (c)(7)(i) of this section and the reporting requirements of this section cannot be avoided by recasting the single sales transaction into 4 separate $9,000 sales transactions.

Example (2). An attorney agrees to represent a client in a criminal case with the attorney's fee to be determined on an hourly basis. In the first month in which the attorney represents the client, the bill for the attorney's services comes to $8,000 which the client pays in cash. In the second month in which the attorney represents the client, the bill for the attorney's services comes to $4,000, which the client again pays in cash. The aggregate amount of cash paid ($12,000) relates to a single transaction as defined in paragraph (c)(7)(i) of this section, the sale of legal services relating to the criminal case, and the receipt of cash must be reported under this section.

Example (3). A person intends to contribute a total of $45,000 to a trust fund, and the trustee of the fund knows or has reason to know of that intention. The $45,000 contribution is a single transaction under paragraph (c)(7)(i) of this section and the reporting requirement of this section cannot be avoided by the grantor's making five separate $9,000 cash contributions to a single fund or by making five $9,000 cash contributions to five separate funds administered by a common trustee.

Example (4). K, an individual, attends a one day auction and purchases for cash two items, at a cost of $9,240 and $1,732.50 respectively (tax and buyer's premium included). Because the transactions are related transactions as defined in paragraph (c)(7)(ii) of this section, the auction house is required to report the aggregate amount of cash received from the related sales ($10,972.50), even though the auction house accounts separately on its books for each item sold and presents the purchaser with separate bills for each item purchased.

Example (5). F, a coin dealer, sells for cash $9,000 worth of gold coins to an individual on three successive days. Under paragraph

(c)(7)(ii) of this section the three $9,000 transactions are related transactions aggregating $27,000 if F knows, or has reason to know, that each transaction is one of a series of connected transactions.

(8) *Recipient*. (i) The term *recipient* means the person receiving the cash. Except as provided in paragraph (c)(8)(ii) of this section, each store, division, branch, department, headquarters, or office (''branch'') (regardless of physical location) comprising a portion of a person's trade or business shall for purposes of this section be deemed a separate recipient.

(ii) A branch that receives cash payments will not be deemed a separate recipient if the branch (or a central unit linking such branch with other branches) would in the ordinary course of business have reason to know the identity of payers making cash payments to other branches of such person.

(iii) *Examples*. The following examples illustrate the application of the rules in paragraphs (c)(8)(i) and (ii) of this section:

Example (1). N, an individual, purchases regulated futures contracts at a cost of $7,500 and $5,000, respectively, through two different branches of Commodities Broker X on the same day. N pays for each purchase with cash. Each branch of Commodities Broker X transmits the sales information regarding each of N's purchases to a central unit of Commodities Broker X (which settles the transactions against N's account). Under paragraph (c)(8)(ii) of this section the separate branches of Commodities Broker X are not deemed to be separate recipients; therefore. Commodities Broker X must report with respect to the two related regulated futures contracts sales in accordance with this section.

Example (2). P, a corporation, owns and operates a racetrack. P's racetrack contains 100 betting windows at which pari-mutuel wagers may be made. R, an individual, places cash wagers of $3,000 each at five separate betting windows. Assuming that in the ordinary course of business each betting window (or a central unit linking windows) does not have reason to know the identity of persons making wagers at other betting windows, each betting window would be deemed to be a separate cash recipient under paragraph (c)(8)(i) of this section. As no individual recipient received cash in excess of $10,000, no report need be made by P under this section.

(d) *Exceptions to the reporting requirements of section 6050I*—(1) *Receipt of cash by certain financial institutions*. A financial institution as defined in subparagraphs (A), (B), (C), (D), (E), (F), (G), (J), (K), (R), and (S) of section 5312 (a)(2) of Title 31, United States Code is not required to report the receipt of cash exceeding $10,000 under section 6050I.

(2) *Receipt of cash by certain casinos having gross annual gaming revenue in excess of $1,000,000*—(i) *In general*. If a casino receives cash in excess of $10,000 and is required to report the receipt of such cash directly to the Treasury Department under 31 CFR 103.22(a)(2) and 103.25 and is subject to the recordkeeping requirements of 31 CFR 103.36, then the casino is not required to make a return with respect to the receipt of such cash under section 6050I and these regulations.

(ii) *Casinos exempt under 31 CFR 103.45(c)*. Under the authority of section 6050I(c)(1)(A), the Secretary may exempt from the reporting requirements of section 6050I casinos with gross annual gaming revenue in excess of $1,000,000 that are exempt under 31 CFR 103.45(c) from reporting certain cash transactions to the Treasury Department under 31 CFR 103.22(a)(2) and 103.25. The determination whether a casino which is granted an exemption under 31 CFR 103.45(c) will be required to report under section 6050I will be made on a case by case basis, concurrently with the granting of such an exemption.

(iii) *Reporting of cash received in a nongaming business*. Nongaming businesses (such as shops, restaurants, entertainment, and hotels) at casino hotels and resorts are separate trades or businesses in which the receipt of cash in excess of $10,000 is reportable under section 6050I and these regulations. Thus, a casino exempt under paragraph (d)(2) (i) or (ii) of this section must report with respect to cash in excess of $10,000 received in its nongaming businesses.

(iv) *Example*. The following example illustrates the application of the rules in paragraphs (d)(2) (i) and (iii) of this section:

Example. A and B are casinos having gross annual gaming revenue in excess of $1,000,000. C is a casino with gross annual gaming revenue of less than $1,000,000. Casino

A receives $15,000 in cash from a customer with respect to a gaming transaction which the casino reports to the Treasury Department under 31 CFR 103.22(a)(2) and 103.25. Casino B receives $15,000 in cash from a customer in payment for accommodations provided to that customer at Casino B's hotel. Casino C receives $15,000 in cash from a customer with respect to a gaming transaction. Casino A is not required to report the transaction under section 6050I or these regulations because the exception for certain casinos provided in paragraph (d)(2)(i) (''the casino exception'') applies. Casino B is required to report under section 6050I and these regulations because the casino exception does not apply to the receipt of cash from a nongaming activity. Casino C is required to report under section 6050I and these regulations because the casino exception does not apply to casinos having gross annual gaming revenue of $1,000,000 or less which do not have to report to the Treasury Department under 31 CFR 103.22(a)(2) and 103.25.

(3) *Receipt of cash not in the course of the recipient's trade or business.* The receipt of cash in excess of $10,000 by a person other than in the course of the person's trade or business is not reportable under section 6050I. Thus, for example, F, an individual in the trade or business of selling real estate, sells a motorboat for $12,000, the purchase price of which is paid in cash. F did not use the motorboat in any trade or business in which F was engaged. F is not required to report under section 6050I or these regulations because the exception provided in this paragraph (d)(3) applies.

(4) *Receipt is made with respect to a foreign cash transaction*—(i) *In general.* Generally, there is no requirement to report with respect to a cash transaction if the entire transaction occurs outside the United States (the fifty states and the District of Columbia). An entire transaction consists of both the transaction as defined in paragraph (c)(7)(i) of this section and the receipt of cash by the recipient. If, however, any part of an entire transaction occurs in the Commonwealth of Puerto Rico or a possession or territory of the United States and the recipient of cash in that transaction is subject to the general jurisdiction of the Internal Revenue Service under title 26 of the United States Code, the recipient is required to report the transaction under this section.

(ii) *Example.* The following example illustrates the application of the rules in paragraph (d)(4)(i) of this section:

Example. W, an individual engaged in the trade or business of selling aircraft, reaches an agreement to sell an airplane to a U.S. citizen living in Mexico. The agreement, no portion of which is formulated in the United States, calls for a purchase price of $125,000 and requires delivery of and payment for the airplane to be made in Mexico. Upon delivery of the airplane in Mexico, W receives $125,000 in cash. W is not required to report under section 6050I or these regulations because the exception provided in paragraph (d)(4)(i) of this section (''foreign transaction exception'') applies. If, however, any part of the agreement to sell had been formulated in the United States, the foreign transaction exception would not apply and W would be required to report the receipt of cash under section 6050I and these regulations.

(e) *Time, manner, and form of reporting*—(1) *Time of reporting.* The reports required by this section must be filed with the Internal Revenue Service by the 15th day after the date the cash is received. However, in the case of multiple payments relating to a single transaction (or two or more related transactions), see paragraph (b) of this section.

(2) *Form of reporting.* A report required by paragraph (a) of this section must be made on Form 8300. A return of information made in compliance with this paragraph must contain the name, address, and taxpayer identification number of the person from whom the cash was received; the name, address, and taxpayer identification number of the person on whose behalf the transaction was conducted (if the recipient knows or has reason to know that the person from whom the cash was received conducted the transaction as an agent for another person); the amount of cash received; the date and nature of the transaction; and any other information required by Form 8300. Form 8300 can be obtained from any Internal Revenue Service Forms Distribution Center.

(3) *Manner of reporting*—(i) *Where to file.* A person making a return of information under this section must file Form 8300 by mailing it to the address shown in the instructions to the form.

(ii) *Verification*. A person making a return of information under this section must verify the identity of the person from whom the reportable cash is received. Verification of the identity of a person who purports to be an alien must be made by examination of such person's passport, alien identification card, or other official document evidencing nationality or residence. Verification of the identity of any other person may be made by examination of a document normally acceptable as a means of identification when cashing or accepting checks (for example, a driver's license or a credit card). In addition, a return will be considered incomplete if the person required to make a return knows (or has reason to know) that an agent is conducting the transaction for a principal, and the return does not identify both the principal and the agent.

(iii) *Retention of returns*. A person required to make an information return under this section must keep a copy of each return filed for five years from the date of filing.

(f) *Requirement of furnishing statements*—(1) *In general*. Any person required to make an information return under this section must furnish a single, annual, written statement to each person whose name is set forth in a return (''identified person'') filed with the Internal Revenue Service.

(2) *Form of statement*. The statement required by the preceding paragraph need not follow any particular format, but it must contain the following information:

(i) The name and address of the person making the return;

(ii) The aggregate amount of reportable cash received by the person who made the information return required by this section during the calendar year in all cash transactions relating to the identified person; and

(iii) A legend stating that the information contained in the statement is being reported to the Internal Revenue Service.

(3) *When statement is to be furnished*. Statements required under this paragraph (f) must be furnished to an identified person on or before January 31 of the year following the calendar year in which the cash is received. A statement shall be considered to be furnished to an identified person if it is mailed to the identified person at the identified person's last known address.

(g) *Cross-reference to penalty provisions*—(1) *Failure to file correct information return*. See section 6721 for civil penalties relating to the failure to file a correct return under section 6050I(a) and paragraph (a) of this section.

(2) *Failure to furnish correct statement*. See section 6722 for civil penalties relating to the failure to furnish a correct statement to identified persons under section 6050I(e) and paragraph (f) of this section.

(3) *Criminal penalties*. Any person who willfully fails to make a return or makes a false return under section 6050I and this section may be subject to criminal prosecution.

[T.D. 8098, 51 FR 31611, Sept. 4, 1986; 51 FR 33033, Sept. 18, 1986, as amended by T.D. 8373, 56 FR 57976, 57977, Nov. 15, 1991; 58 FR 16496, Mar. 29, 1993; T.D. 8479, 58 FR 33764, June 21, 1993]

§ 1.6050I–2 Returns relating to cash in excess of $10,000 received as bail by court clerks.

(a) *Reporting requirement*. Any clerk of a Federal or State court who receives more than $10,000 in cash as bail for any individual charged with a specified criminal offense must make a return of information with respect to that cash receipt. For purposes of this section, a clerk is the clerk's office or the office, department, division, branch, or unit of the court that is authorized to receive bail. If someone other than a clerk receives bail on behalf of a clerk, the clerk is treated as receiving the bail for purposes of this paragraph (a).

(b) *Meaning of terms*. The following definitions apply for purposes of this section—

Cash means—

(1) The coin and currency of the United States, or of any other country, that circulate in and are customarily used and accepted as money in the country in which issued; and

(2) A cashier's check (by whatever name called, including treasurer's check and bank check), bank draft,

traveler's check, or money order having a face amount of not more than $10,000.

Specified criminal offense means—

(1) A Federal criminal offense involving a controlled substance (as defined in section 802 of title 21 of the United States Code), provided the offense is described in Part D of Subchapter I or Subchapter II of title 21 of the United States Code;

(2) Racketeering (as defined in section 1951, 1952, or 1955 of title 18 of the United States Code);

(3) Money laundering (as defined in section 1956 or 1957 of title 18 of the United States Code); and

(4) Any State criminal offense substantially similar to an offense described in this paragraph (b).

(c) *Time, form, and manner of reporting*—(1) *Time of reporting*—(i) *In general.* The information return required by this section must be filed with the Internal Revenue Service by the 15th day after the date the cash bail is received.

(ii) *Multiple payments.* If multiple payments are made to satisfy bail reportable under this section and the initial payment does not exceed $10,000, the initial payment and subsequent payments must be aggregated and the information return required by this section must be filed with the Internal Revenue Service by the 15th day after receipt of the payment that causes the aggregate amount to exceed $10,000. However, if payments are made to satisfy separate bail requirements, no aggregation is required. Thus, if in Month 1 a clerk receives $6,000 in bail for an individual charged with a specified criminal offense and later, in Month 2, receives $7,000 in bail for that same individual charged with another specified criminal offense, no aggregation is required.

(2) *Form of reporting.* The return of information required by paragraph (a) of this section must be made on Form 8300 and must contain the following information—

(i) The name, address, and taxpayer identification number (TIN) of the individual charged with the specified criminal offense;

(ii) The name, address, and TIN of each person posting the bail (payor of bail), other than a person posting bail who is licensed as a bail bondsman in the jurisdiction in which the bail is received;

(iii) The amount of cash received;

(iv) The date the cash was received; and

(v) Any other information required by Form 8300 or its instructions.

(3) *Manner of reporting*—(i) *Where to file.* Returns required by this section must be filed with the Internal Revenue Service office designated in the instructions for Form 8300. A copy of the information return required to be filed under this section must be retained for five years from the date of filing.

(ii) *Verification of identity.* A clerk required to make an information return under this section must, in accordance with §1.6050I–1(e)(3)(ii), verify the identity of each payor of bail listed in the return.

(d) *Requirement to furnish statements*—(1) *Information to Federal prosecutors*—(i) *In general.* A clerk required to make an information return under this section must furnish a written statement to the United States Attorney for the jurisdiction in which the individual charged with the specified crime resides and the United States Attorney for the jurisdiction in which the specified criminal offense occurred (applicable United States Attorney(s)). The written statement must be filed with the applicable United States Attorney(s) by the 15th day after the date the cash bail is received.

(ii) *Form of statement.* The written statement must include the information required by paragraph (c)(2) of this section. The requirement of this paragraph (d)(1)(ii) will be satisfied if the clerk provides to the applicable United States Attorney(s) a copy of the Form 8300 that is filed with the Internal Revenue Service pursuant to this section.

(2) *Information to payors of bail*—(i) *In general.* A clerk required to make an information return under this section must furnish a written statement to each payor of bail whose name is set forth in a return required by this section. A statement required under this paragraph (d)(2) must be furnished to a payor of bail on or before January 31 of the year following the calendar year in

which the cash is received. A statement will be considered furnished to a payor of bail if it is mailed to the payor's last known address.

(ii) *Form of statement*. The statement required by this paragraph (d)(2) need not follow any particular format, but must contain the following information—

(A) The name and address of the clerk's office making the return;

(B) The aggregate amount of reportable cash received during the calendar year by the clerk who made the information return required by this section in all cash transactions relating to the payor of bail; and

(C) A legend stating that the information contained in the statement has been reported to the Internal Revenue Service and the applicable United States Attorney(s).

(iii) *Aggregate amount*. The requirement of furnishing the aggregate amount in paragraph (d)(2)(ii)(B) of this section will be satisfied if the clerk provides to the payor of bail either a single written statement listing the aggregate amount, or a copy of each Form 8300 relating to that payor of bail.

(e) *Cross-reference to penalty provisions*. See sections 6721 through 6724 for penalties relating to the failure to comply with the provisions of this section.

(f) *Effective date*. This section applies to cash received by court clerks on or after February 13, 1995.

[T.D. 8652, 61 FR 7, Jan. 2, 1996]

§ 1.6050J–1T Questions and answers concerning information returns relating to foreclosures and abandonments of security (temporary).

The following questions and answers relate to the requirement of reporting foreclosures and abandonments of security under section 6050J of the Internal Revenue Code Act of 1954, as added by section 148 of the Tax Reform Act of 1984 (98 Stat. 687).

REQUIREMENT OF REPORTING

In General

Q–1: What does section 6050J provide with respect to the reporting of acquisitions and abandonments of property that secures indebtedness?

A–1: Section 6050J provides that an information return must be made by any person who, in connection with a trade or business conducted by the person (except as provided in A–13), lends money and, in full or partial satisfaction of the debt, acquires an interest in any property that is security for the debt, or has reason to know that the property has been abandoned. For purposes of these questions and answers, a person who lends money in connection with a trade or business is referred to as a ''lender''.

Trade or Business Requirement

Q–2: Must a person be in the trade or business of lending money in order to be subject to the reporting requirement of this section?

A–2: No. A person does not have to be in the trade or business of lending money to be subject to this reporting requirement. Thus, if L sells automobiles and lends money to B to enable B to purchase an automobile from L for use in B's trade or business, and that automobile is security for the loan, L would be subject to this reporting requirement. Similarly, if P promotes interests in an oil well, and lends money to I to enable I to invest in the oil well which is security for the loan, P would be subject to this reporting requirement.

Q–3: How does the reporting requirement apply in the case of pools, fixed investment trusts, or other similar arrangements through which undivided beneficial interests or participations in indebtedness are offered?

A–3: In these cases, the owners of the undivided beneficial interests or participations are not subject to this reporting requirement. Instead, the trustee, record owner, or person acting in a similar capacity is treated as the lender for purposes of this reporting requirement and is the party required to report. For purposes of both section 6050J and the applicable penalty provisions, only one return and one statement must be filed with respect to each loan or other evidence of indebtedness. For situations when more than one return or statement must be filed, see A–29, A–31, and A–41. The trustee, record owner, or person acting in a similar capacity, rather than the owners of beneficial interests or participations, is subject to the applicable penalty provisions (see A–43).

Q–4: How does the reporting requirement apply in the case of corporate, tax-exempt, or other bond issues?

A–4: In these cases, the owners or holders of a bond issue are not required to report. Instead, the trustee or person acting in a similar capacity is treated as the lender for purposes of this reporting requirement and is the party required to report. For purposes of both section 6050J and the applicable penalty provisions, only one return and one statement must be filed with respect to a bond issue. For situations when more than one return or statement must be filed, see A–29, A–

31, and A–41. The trustee or person acting in a similar capacity, rather than the owners or holders of a bond issue, is subject to the applicable penalty provisions (see A–43).

Property Subject to Reporting

Q–5: Does the reporting requirement apply to all types of property securing indebtedness?

A–5: No. The reporting requirement does not apply to any loan made to an individual and secured by an interest in tangible personal property which is neither held for investment nor used in a trade or business. For rules governing when the reporting requirment applies to tangible personal property of a type ordinarily used for personal purposes, see A–8.

Q–6: Does the reporting requirement apply when property securing indebtedness is held both for personal use and for use in a trade or business?

A–6: Yes. The reporting requirement applies when property securing indebtedness is held both for personal use and for use in a trade or business. Similarly, the reporting requirement applies when the borrower holds such property both for personal use and for investment purposes.

Q–7: Does the reporting requirement apply to indebtedness secured by a personal residence?

A–7: Yes. A lender is subject to the reporting requirement if the property that is security for the loan is real property, including a personal residence, whether or not held for investment or used in a trade or business.

Q–8: In the case of a loan made to an individual and secured by personal property of a type that is ordinarily used for personal purposes, how does a lender know whether such property is used in a trade or business or held for investment purposes?

A–8: In the case of a loan made to an individual and secured by personal property of a type that is ordinarily used for personal purposes, such as an automobile, computer, or boat, the lender is subject to the reporting requirement if the lender knows that the property will be used in a trade or business or held for investment purposes. For this purpose, a lender knows information if the information is included on the books and records of the lender or its agents pertaining to the loan, or is known by the lender or agent's officers, partners, principals or employees, but only if such information was acquired in the course of their ordinary business activities on behalf of the lender. For example, if a borrower indicates on the loan agreement or disclosure statement that the borrower intends to use the property securing the loan in the borrower's trade or business, the lender is subject to this reporting requirement. Similarly, if the borrower notifies the lender that the borrower intends to convert the property from personal use to use in a trade or business, the lender is subject to the reporting requirement.

Q–9: If a lender maintains a system under which the lender classifies loans according to the use of property that secures the loan (such as use in a trade or business or personal use), may the lender rely on this system in determining whether the reporting requirement applies?

A–9: Yes. A lender may rely on the classification system to determine whether the reporting requirement applies, provided that the classification system is designed and reasonably maintained to ensure accuracy in identifying the use of property.

Acquisition of an Interest

Q–10: For purposes of the reporting requirement, when is a lender treated as acquiring an interest in property that is security for indebtedness?

A–10: In general, an interest in property is acquired on the earlier of the date title is transferred to the lender or the date possession and the burdens and benefits of ownership are transferred to the lender. If State or other applicable law provides for an objection period within which the borrower and other appropriate parties may object to the lender's proposal toretain the property in satisfaction of the indebtedness, a lender is treated as acquiring an interest in the property on the date this objection period expires. If the lender purchases the property at a sale held to satisfy the indebtedness, such as at a foreclosure or execution sale, the lender is treated as acquiring an interest in the property on the later of the date of the sale or the date the borrower's right of redemption, if any, expires. See 4A–15 for rules governing reporting when a party other than the lender acquires property securing indebtedness at a foreclosure, execution or similar sale.

Q–11: If a lender takes possession of property that is security for a loan for a limited purpose, such as completing construction on or improvement to the property, is the lender treated as having acquired an interest in the property at that point?

A–11: No. The lender in these circumstances is not treated as acquiring an interest in the property. However, the lender must report if he later acquires an interest in the property in full or partial satisfaction of the indebtedness (see A–10 or A–15).

Indirect Acquisition

Q–12: If a lender acquires an interest in a partnership, trust, or other entity in full or partial satisfaction of a loan that is secured by the assets or property owned by the partnership, trust, or other entity, is the lender treated as acquiring an interest in the property securing the loan?

A–12: Yes. A lender in this case acquires an interest in the underlying assets or property and the reporting requirements of this section apply to the acquisition of that interest in a partnership, trust, or other entity.

Treatment of Governmental Units

Q–13: How does the reporting requirement apply to a governmental unit?

A–13: A governmental unit (or any agency or instrumentality thereof) which lends money secured by property is subject to the reporting requirement without regard to the requirement that the money be lent in connection with a trade or business. A governmental unit (or any agency or instrumentality thereof) subject to the reporting requirement must designate an officer or employee to make the return. The officer or employee appropriately designated must make the return in the form and manner prescribed by this section.

Notification of Sale Under Section 7425(b)

Q–14: Does a return filed as required under this section constitute a notification of sale under section 7425(b)?

A–14: No. A return filed under this section is not considered a notification of sale under section 7425(b).

Sale to Third Party

Q–15: If a party other than the lender purchases property securing a loan at a foreclosure, execution, or similar sale, must the lender report under this section?

A–15: Yes. The lender must report if a party other than the lender purchases property securing the lender's loan at a foreclosure, execution, or similar sale. If the proceeds of that sale are applied to satisfy all or any portion of the lender's loan, the lender must treat the property as having been abandoned. The lender will be treated as having reason to know that the property has been abandoned as of the date of the sale (see A–19). If no proceeds of such a sale are made available to satisfy any portion of the lender's loan but the lender's security interest foreclosed upon is terminated, reduced, or otherwise impaired by reason of the sale, the lender will be treated as having reason to know that the property has been abandoned as of the date of the sale (see A–19).

Treatment of Foreign Borrowers

Q–16: How does the reporting requirement apply in the case of foreign borrowers where the property securing the loan is located outside the United States?

A–16: No reporting is required where both of the following requirements are met: (a) The property securing the loan is located outside the United States, and (b) at any time before the lender is required to report, the borrower furnishes the lender with a statement, signed upon penalty of perjury, that he is an exempt foreign person (unless an employee or other agent of the lender who is responsible for receiving or reviewing these statements has actual knowledge that the statement is incorrect). For purposes of this section, the borrower is an exempt foreign person if he:

(1) Is not a citizen of the United States, a resident of the United States, a person treated as a resident of the United States by reason of an election under section 6013 (g) or (h) or a United States corporation or other United States entity;

(2) Is not subject to the provisions of section 877; and

(3) At the time the statement is furnished, is not, or reasonably expects not to be, engaged in a trade or business in the United States during the current year in connection with the loan or property securing the loan.

If, after providing the statement, the borrower ceases to be an exempt foreign person, he must so notify the lender in writing within 30 days of this change in status. If the lender is so notified, this exemption from the reporting requirement no longer applies.

Abandonments

Q–17: For purposes of this reporting requirement, when has an abandonment occurred?

A–17: An abandonment has occurred when the objective facts and circumstances indicate that the borrower intended to and has permanently discarded the property from use.

Q–18: Does the fact that a lender knows or has reason to know of an abandonment of property securing a loan mean that the borrower is entitled to an abandonment loss?

A–18: No. The definition of an abandonment of property securing a loan in A–17 applies only for purposes of this reporting requirement and is not intended to apply for other purposes, such as determining whether a borrower would be entitled to an abandonment loss.

Q–19: Under what circumstances will a lender be considered to have reason to know that property which is security for a loan has been abandoned?

A–19: Whether a lender has reason to know that property which is security for a loan has been abandoned is to be determined with reference to all the facts and circumstances concerning the status of the property. When the lender in the ordinary course of business becomes aware or should become aware of circumstances indicating that the property has been abandoned, the lender will be deemed to know all the information that would have been discovered through a reasonable inquiry. For example, if a borrower has failed (without adequate explanation) to make payments on the loan for a substantial

period, the lender must make a reasonable inquiry to determine whether there has been an abandonment. If a reasonable inquiry would reveal objective facts and circumstances indicating that the borrower intended to and has permanently discarded the property from use, then the lender has reason to know that the property has been abandoned. If a lender knows or has reason to know that the property has been abandoned and reasonably expects to commence foreclosure, execution sale, or similar proceedings, see A–20.

Q–20: If a lender has reason to know that property that is security for a loan has been abandoned and reasonably expects to commence within three months foreclosure, execution sale, or similar proceedings, is reporting of the abandonment required?

A–20: In these circumstances, the lender need not report as of the date he knows or has reason to know that the property has been abandoned. Instead, the lender must report as of the date he acquires an interest in the property or a third party purchases the property at a foreclosure, execution or similar sale (see A–10 and A–15). In any other case, the lender must report as of the date the lender knows or has reason to know that the property has been abandoned (see A–18).

Q–21: If a lender has reason to know that property that is security for a loan has been abandoned and reasonably expects to commence within three months foreclosure, execution sale or similar proceedings but in fact does not commence such proceedings within the three month period, must the lender report?

A–21: Yes. In these circumstances, the lender's obligation to report the abandonment arises at the close of the three month period. For example, if on December 31, 1985, a lender first has reason to know that property securing his loan has been abandoned and reasonably expects to commence foreclosure proceedings within three months, the lender is not required to report as of December 31, 1985 (see A–20). However, if the lender does not in fact commence foreclosure proceedings by March 31, 1986, the lender's obligation to report arises on this date. The lender must provide information on the abandonment under A–27 as of the date the lender first had reason to know of the abandonment (December 31, 1985). The lender must file the return required under this section with the Internal Revenue Service on or before February 28, 1987, and furnish a statement to the borrower on or before January 31, 1987 (see A–33 and A–40).

Subsequent Holder of a Loan

Q–22: To whom does the reporting requirement apply when a person lends money secured by property and subsequently transfers his interest in the indebtedness to another person?

A–22: The subsequent holder of a loan is treated as the lender for purposes of this reporting requirement and is the party required to report with respect to events occurring after the date he acquires the loan. This rule applies to all subsequent holders of a secured loan, including governmental units or any agencies or instrumentalities thereof. For example, if the Federal National Mortgage Association purchases real property loans from a lender, it would be subject to the reporting requirement.

Multiple Lenders

Q–23: If more than one person lends money secured by the same property, and one lender forecloses upon or otherwise acquires an interest in the property, must the other lenders report under this section?

A–23: Yes. In these circumstances, other lenders must report if they know or have reason to know that the property securing their loans is foreclosed upon or otherwise acquired by another lender and the sale or other acquisition terminates, reduces, or otherwise impairs their security interests in the property (see A–15). For example, if there is a first and second mortgage on a building, and the second mortgagee knows or has reason to know that the first mortgagee has foreclosed upon the building, the second mortgagee is subject to the reporting requirement even if no part of the indebtedness owed to him is satisfied by the proceeds of the foreclosure sale. For a description of the reporting requirement applicable to the first mortgagee, see A–10 and A–15.

Q–24: If more than one person lends money secured by property, and one lender knows or has reason to know that the property has been abandoned, must each lender report under this section?

A–24: No. Each lender is required to report only when he knows or has reason to know that property has been abandoned (see A–19).

FORM AND MANNER OF RETURN

Form of Return

Q–25: What form shall be used to make a return required by section 6050J?

A–25: Except as provided in A–35, the return must be made on Forms 1096 and 1099. The person required to make the return, however, may prepare and use a form which contains provisions substantially similar with those of Forms 1096 and 1099 if the person complies with any revenue procedures relating to substitute Forms 1096 and 1099 in effect at that time.

Information Included on Return

Q–26: What information must be included on a return required by reason of an acquisition of an interest in property that is security for a loan?

A–26: The following information must be included on the return:

(a) The name and address of the borrower with respect to the secured indebtedness;

(b) The borrower's TIN, as defined in Section 7701(a);

(c) A general description of the property in which an interest is acquired;

(d) Whether the borrower is personally liable for repayment of the indebtedness;

(e) The date on which the person acquired an interest in the property (see A–10 or A–15);

(f) The amount of the indebtedness outstanding at the time the interest in property is acquired;

(g) If the borrower is personally liable for repayment of the indebtedness, the fair market value of the property at the time the interest is acquired;

(h) The amount of the indebtedness satisfied by the acquisition; and

(i) Any other information as may be required by Forms 1096 and 1099.

Q–27: What information must be included on a return required because a person knows or has reason to know that property which is security for a loan has been abandoned?

A–27: The following information must be included on the return:

(a) The information required in A–26 (a), (b), and (d);

(b) A general description of the property abandoned;

(c) The date on which the person first knows or has reason to know that the property has been abandoned;

(d) The amount of the indebtedness outstanding as of the date on which the person first knows or has reason to know that the property has been abandoned;

(e) If the borrower is personally liable for repayment of the indebtedness, the fair market value of the property at the time of abandonment; and

(f) Any other information as may be required by Forms 1096 and 1099.

Partnership Borrower

Q–28: If a borrower is a partnership, must the TIN of each partner be reported?

A–28: No. If a borrower is a partnership, only the TIN of the partnership must be reported.

Multiple Borrowers

Q–29: If there is more than one borrower on a single secured loan, must a person required to report under this section make a return with respect to each borrower on the loan?

A–29: Yes. Generally, a separate return must be made with respect to each borrower on a secured loan. However, only one report is required if the lender knows that the borrowers hold property as tenants by the entirety or that the property is held as community property.

General Description of Property

Q–30: What type of information constitutes a general description of the property?

A–30: A general description of the property consists of information that sufficiently identifies the property. In the case of real property, a general description consists of the property's address unless this information is not available or would not sufficiently identify the property, in which case a legal description (*i.e.*, section, lot, block) must be provided instead. A general description of personal property consists of the type, make and model (where applicable) of the property. For example, an automobile would be described as ''Car—1983 Pontiac Firebird.'' However, in the case of a single loan secured by more than one piece of personal property, a general description consists of the type or category of the pieces acquired or abandoned. For example, if the security for a single loan is six desks and seven typewriters, a general description of the property would be ''Office Equipment.''

Multiple Acquisitions and Abandonments

Q–31: Must each acquisition and abandonment that occurs in a taxable year be reported on a separate return?

A–31: Generally, each acquisition and abandonment required to be reported by a person for a taxable year must be reported on a separate return. However, in the case of a single loan secured by more than one piece of property, separate returns will not be required when a person acquires an interest in, or knows or has reason to know of the abandonment of, more than one piece of property that is security for the single loan in a taxable year. Instead, the person shall make one return for all of the acquisitions and one return for all of the abandonments of property that are security for the loan for a taxable year.

Fair Market Value

Q–32: In the case of a foreclosure, execution, or similar sale, what is the fair market value of the property for purposes of the reporting requirement?

A–32: In general, in the absence of clear and convincing evidence to the contrary, the proceeds of the foreclosure, execution, or similar sale will be considered the fair market value of the property for purposes of this reporting requirement.

Time for Filing

Q–33: When must a person file the return or returns required by section 6050J with the Internal Revenue Service?

A–33: The return or returns must be filed on or before February 28 (March 31 if filed electronically) of the year following the calendar year in which the acquisition of an interest in the property occurs or in which the

lender knows or has reason to know of the abandonment of the property.

Place for Filing

Q–34: Where must the return or returns be filed?

A–34: The return or returns must be filed with the appropriate Internal Revenue Service Center, the addresses of which are listed in the instructions for the Form 1099 series.

Use of Magnetic Media

Q–35: What rules apply with respect to the use of magnetic media?

A–35: Any return required under section 6050J must be filed on magnetic media to the extent required by section 6011(e). Any person not required by section 6011(e) to file returns under section 6050J on magnetic media may request permission to do so. See §1.9101 for rules relating to permission to submit information on magnetic tape or other media. If a person required to file returns on magnetic media fails to do so, the penalty under section 6652 (failure to file an information return) applies.

REQUIREMENT OF FURNISHING STATEMENTS TO BORROWERS

In General

Q–36: What statements must be furnished to borrowers?

A–36: Any person required to make an information return under section 6050J must furnish a statement to each borrower whose name is required to be set forth in a return filed with the Internal Revenue Service. For the date when the statement must be furnished, see A–40.

Q–37: Is the statement considered to be furnished to the borrower if it is mailed to the borrower at the borrower's last known address?

A–37: Yes.

Information Included on Statement

Q–38: What information must be included on the statement?

A–38: The statement must include the following information:

(a) Except in the case where the return is made on behalf of a governmental unit (or any agency or instrumentality thereof), the name and address of the person required to make the information return;

(b) In the case where the return is made on behalf of a governmental unit or any agency or instrumentality thereof, the name and address of such unit, agency or instrumentality;

(c) The information required under A–26 or A–27, whichever is applicable; and

(d) A legend stating that the information is being reported to the Internal Revenue Service.

Copy of Form 1099 to Borrowers

Q–39: May the requirement of furnishing a statement be met by furnishing a copy of the Form 1099 filed with respect to that borrower?

A–39: Yes. The requirement of furnishing a statement may be met by furnishing to the borrower a copy of the Form 1099 containing the same information filed with the Service with respect to that borrower, or a reasonable facsimile thereof, provided that the form or the reasonable facsimile bears a legend stating that the information is being reported to the Internal Revenue Service.

Time of Furnishing Statement

Q–40: When is a statement required to be furnished to the borrower?

A–40: A statement is required to be furnished to the borrower on or before January 31 of the year following the calendar year in which the acquisition or abandonment of property occurs.

Multiple Borrowers

Q–41: If a person required to report under this section must make an information return with respect to more than one borrower on a single loan, of an interest in the property occurs or in which the lender knows or has reason to know of the abandonment of the property.

A–41: Yes. A separate statement must be furnished to each borrower with respect to which a separate return is required under section 6050J.

Extensions of Time

Q–42: Are there any circumstances under which an extension of time may be granted with respect to the requirement of furnishing statements to borrowers?

A–42: Yes. Upon written application of the person required to report, the service center director may, for good cause shown, grant that person an additional period (not to exceed 30 days) in which to furnish statements under section 6050J with respect to any calendar year. The application for an extension must be addressed to the director of the service center with which the returns must be filed. The application must contain a concise statement of the reasons for requesting the extension in order to aid the service center director in determining the period of extension, if any, to be granted. The application must state at the top of the first page that it is made under section 1.6050J–1T and must be signed by the person required to report under section 6050J. In general, the application should be filed not earlier than September 30 of the year in which the acquisition of an interest in the property occurs or in which the lender knows or has reason to know of the abandonment of the property,

and not later than January 15 of the following year.

PENALTIES

Q–43: Are there penalties for failing to comply with the requirements of section 6050J and the regulations thereunder?

A–43: Yes. The penalty for failing to make any information return with respect to any borrower under section 6050J is provided in section 6652. The penalty for failing to furnish a statement to any borrower is provided in section 6678.

EFFECTIVE DATE

Q–44: When is section 6050J effective?

A–44: Section 6050J is effective for acquisitions and abandonments of property after December 31, 1984.

(Approved by the Office of Management and Budget under control number 1545–0877)

(Secs. 6050J and 7805 of the Internal Revenue Code of 1954 (98 Stat. 687, 68A Stat. 917, 26 U.S.C. 6050J, 7805 respectively)

[T.D. 7971, 49 FR 34460, Aug. 31, 1984, as amended by T.D. 8895, 65 FR 50408, Aug. 18, 2000]

§ 1.6050K–1 Returns relating to sales or exchanges of certain partnership interests.

(a) *Partnership return required*—(1) *In general*. Except as otherwise provided in this paragraph (a), a partnership shall make a separate return on Form 8308 with respect to each section 751(a) exchange (as defined in paragraph (a)(4)(i) of this section) of an interest in such partnership which occurs after December 31, 1984. A partnership that is in doubt as to whether partnership property constitutes section 751 property to any extent or as to whether a transfer of a partnership interest constitutes a section 751(a) exchange may file Form 8308 in order to avoid the risk of incurring a penalty under section 6721. The penalty under section 6721 will generally apply, however, to partnerships that do not file Form 8308 where in fact a section 751(a) exchange occurred, except as provided in paragraphs (a)(2) and (e) of this section.

(2) *Return required under section 6045*. No return shall be required under section 6050K(a) and paragraph (a)(1) of this section with respect to the sale or exchange of a partnership interest if a return is required to be filed under section 6045 with respect to such sale or exchange.

(3) *Single or composite documents*. The Commissioner may authorize the use, at the option of the partnership, of a single document which includes all of the partnership's returns for a calendar year in the case of partnerships required under paragraph (a)(1) of this section to make 25 or more returns on Form 8308 for any calendar year. In addition, the Commissioner may authorize the use for this purpose, also at the option of such a partnership, of a composite document. These authorizations shall be subject to such conditions, limitations, and special rules governing the preparation, execution, filing, and correction thereof as the Commissioner may deem appropriate. Such composite document shall consist of a form prescribed by the Commissioner and an attachment or attachments of magnetic tape or other approved media. To the extent that the use of a single or composite document has been authorized by the Commissioner, references in this section to Form 8303 shall be deemed to refer also to returns included in a single or composite document under this paragraph (a)(3). Any single or composite document so authorized shall include the information required to be provided on Form 8308 under paragraph (b) of this section with respect to each section 751(a) exchange.

(4) *Definitions*. For purposes of section 6050K of the Code and this section—

(i) *Section 751(a) exchange*. The term *section 751(a) exchange* means any sale or exchange of a partnership interest (or portion thereof) in which any portion of any money or other property received by a transferor partner in exchange for all or a part of his or her interest in the partnership is attributable to section 751 property. The term does not include a distribution which is treated as a sale or exchange between the distributee and the partnership under section 751(b) of the Code.

(ii) *Section 751 property*. The term *section 751 property* means unrealized receivables, as defined in section 751(c) of the Code, and inventory items which have appreciated substantially in value (''substantially appreciated inventory

items''), as defined in section 751(d) of the Code.

(iii) *Transferor and transferee.* The term *transferor* means the beneficial owner of a partnership interest immediately before the transfer of that interest. The term ''transferee'' means the beneficial owner of a partnership interest immediately after the transfer of that interest. However, if a partnership does not know the identity of the beneficial owner of an interest in the partnership, the record holder of such interest shall be treated as the transferor or transferee (as the case may be) for purposes of paragraphs (b) and (c) of this section.

(b) *Contents of return.* The return on Form 8308 shall include the following information:

(1) The names, addresses, and taxpayer identification numbers of the transferee and transferor in the exchange and of the partnership filing the return;

(2) The date of the exchange; and

(3) Such other information as may be required by Form 8308 or its instructions.

(c) *Statement to be furnished to transferor and transferee.* Every partnership required to file a return under paragraph (a) of this section must furnish to each person whose name is required to be set forth in such return a written statement on or before January 31 of the calendar year following the calendar year in which the section 751 (a) exchange occurred to which the return under paragraph (a) relates (or, if later, 30 days after the partnership is notified of the exchange as defined in paragraph (e) of this section). The partnership shall use a copy of the completed Form 8308 as a statement unless the Form 8308 contains information with respect to more than one section 751 (a) exchange (see paragraph (a) (3) of this section). If the partnership does not use a copy of Form 8308 as a statement, the statement shall include the information required to be shown on Form 8308 with respect to the section 751 (a) exchange to which the person to whom the statement is furnished is a party. In addition, it shall state that—

(1) The information shown on the statement has been supplied to the Internal Revenue Service,

(2) A transferor of a partnership interest in a sale or exchange described in section 751 (a) of the Internal Revenue Code is required to treat a portion of any gain or loss resulting from the sale or exchange as ordinary income or loss, and

(3) The transferor in a section 751 (a) sale or exchange is required under paragraph (a) (3) of § 1.751–1 to attach a statement relating to the sale or exchange to his or her income tax return for the taxable year in which the sale or exchange occurred.

(d) *Requirement that transferor notify partnership*—(1) *In general.* The transferor of any partnership interest in a section 751 (a) exchange shall notify the partnership of such exchange in writing within 30 days of the exchange (or, if earlier, January 15 of the calendar year following the calendar year in which the exchange occurred). The written notification from the transferor shall include the following information:

(i) The names and addresses of the transferor and transferee in the section 751 (a) exchange;

(ii) The taxpayer identification numbers of the transferor and, if known, of the transferee; and

(iii) The date of the exchange.

Any transferor who notified a partnership under section 6050K (c) (1) prior to January 22, 1986 by a notification that does not meet the requirements of this paragraph (d) shall furnish such partnership with the written notification described in this paragraph (d) on or before February 21, 1986.

(2) *Return required under section 6045.* No transferor shall be required to notify a partnership of the sale or exchange of a partnership interest under section 6050K (c) (1) or paragraph (d) (1) of this section if a return is required to be filed under section 6045 with respect to such sale or exchange.

(e) *Partnership not required to make a return or furnish statements under this section until it has notice of the exchange.* A partnership shall not be required to make a return or furnish statements under section 6050K and this section with respect to any section 751 (a) exchange until it has been notified of the exchange. For purposes of section 6050K (c) (2) and this section, a partnership is

notified of a section 751 (a) exchange when either:

(1) The partnership receives the written notification from the transferor required under paragraph (d) of this section; or

(2) The partnership has knowledge that there has been a transfer of a partnership interest or any portion thereof, and, at the time of the transfer, the partnership had any section 751 property. However, no return or statements are required under section 6050K if the transfer was not a section 751 (a) exchange (*e.g.*, a transfer which in its entirety constitutes a gift for federal income tax purposes). For purposes of this paragraph (e) (2), the partnership may rely on a written statement from the transferor that the transfer was not a section 751 (a) exchange in the absence of knowledge to the contrary. For rules applicable where the partnership is in doubt as to whether partnership property constitutes section 751 property to any extent or as to whether a transfer of a partnership interest constitutes a section 751 (a) exchange, see paragraph (a) (1) of this section.

(f) *Partnership return is to be attached to Form 1065*—(1) *In general.* Any partnership return on Form 8308 required under this section shall be filed as an attachment to the partnership's Form 1065 for its taxable year in which the calendar year in which the section 751 (a) exchange occurred ends and shall be filed at the time (determined with regard to any extension of time for filing) and place prescribed for filing of the partnership's Form 1065 for that taxable year (see paragraph (e) of §1.6031–1 for the time and place for filing Form 1065).

(2) *Notification after Form 1065 is filed.* If a partnership is notified of an exchange (as defined in paragraph (e) of this section) after the partnership has filed Form 1065 for the taxable year with respect to which the exchange should have been reported, Form 8308 shall be filed with the service center or other Internal Revenue office with which the partnership's Form 1065 was filed, on or before the thirtieth day after the partnership is notified of the exchange.

(g) *Penalties.* For penalties for failure of:

(1) Transferors to furnish the notification required by paragraph (d) of this section see section 6722 (b);

(2) Partnerships to furnish any statement required under paragraph (c) of this section see section 6722 (a); and

(3) Partnerships to file the return on Form 8308 as required by paragraph (a) of this section see section 6721.

[T.D. 8119, 52 FR 41, Jan. 2, 1987]

§ 1.6050L–1 Information return by donees relating to certain dispositions of donated property.

(a) *Information returns*—(1) *Disposition of charitable deduction property.* If a donee of any charitable deduction property (as defined in paragraph (e) of this section), sells, exchanges, consumes, or otherwise disposes of (with or without consideration) such property (or any portion thereof) within 2 years after the date of the donor's contribution of such property, the donee shall make an information return on the form prescribed by the Internal Revenue Service. For special rules with respect to successor donees, see paragraph (c) of this section.

(2) *Disposition of items appraised for $500 or less*—(i) *In general.* Paragraph (a)(1) of this section shall not apply with respect to an item of charitable deduction property disposed of by sale if the appraisal summary (as defined in §1.170A–13(c)(4)) signed by the donee with respect to the item contains, at the time of the donee's signature, a statement signed by the donor that the appraised value of the item does not exceed $500. In the case of an appraisal summary that describes more than one item, this exception shall apply only with respect to an item clearly identified as having an appraised value of $500 or less. For purposes of this paragraph (a)(2)(i), items that form a set (such as, for example, a collection of books written by the same author, components of a stereo system, or a group of place settings of a pattern of silverware) are considered one item. In addition, all nonpublicly traded stock is considered one item as are all nonpublicly traded securities other than nonpublicly traded stock.

(ii) *Transitional rule.* Paragraph (a)(2)(i) of this section is satisfied with

respect to an appraisal summary submitted to the donee on or before January 31, 1986, if such donee obtained the required statement from the donor on or before March 31, 1986, on either an amended appraisal summary or an attachment to the original appraisal summary.

(3) *Consumption for distribution of exempt purpose.* Paragraph (a)(1) of this section shall not apply with respect to an item of charitable deduction property consumed or distributed by a donee without consideration if the consumption or distribution is in furtherance of a purpose or function constituting a basis for such donee's exemption under section 501 of the Code. For example, no reporting is required with respect to medical supplies consumed or distributed by a tax-exempt relief organization in aiding disaster victims.

(b) *Information required to be provided on return.* The information return required by paragraph (a)(1) of this section shall include the following:

(1) The name, address, and employer identification number of the donee making the information return;

(2) A description of the property (or portion disposed of) in sufficient detail to identify the charitable deduction property received by such donee;

(3) The name and taxpayer identification number of the donor (social security number if the donor is an individual or employer identification number if the donor is a corporation or partnership);

(4) The date of the contribution to such donee;

(5) Any amount received by such donee with respect to the disposition;

(6) The date of the disposition by such donee; and

(7) Such other information as may be specified by the form or its instructions.

(c) *Successor donees*—(1) *In general.* Section 6050L and this section shall apply to successor donees that receive charitable deduction property (as defined in paragraph (e) of this section) that was transferred by the original donee after July 5, 1988, (whether the successor donee received the property from the original donee or another successor donee). For definitions of the terms ''donor,'' ''donee,'' ''original donee,'' and ''successor donee,'' see §1.170A–13(c)(7)(iv)–(vii).

(2) *Information required to be provided on return.* With respect to charitable deduction property that is transferred to one or more successor donees to which this section applies, the information return required by paragraph (a)(1) of this section shall include, in addition to the information described in paragraph (b) of this section, the following:

(i) The name, address, and employer identification number of the immediately succeeding successor donee (if any) and the immediately preceding successor donee (if any);

(ii) The name, address, and employer identification number of the original donee if different from the information required by paragraph (b)(1) of this section;

(iii) The date of contribution to the original donee; and

(iv) Such other information as may be specified by the form or its instructions.

(3) *Information to be provided to transferor.* Every successor donee to which this section applies that receives any charitable deduction property within the 2-year period described in paragraph (a)(1) of this section shall provide its name, address, and employer identification number to that preceding donee on or before the 15th day after the later of—

(i) The date of transfer to such successor donee, or

(ii) The date such successor donee receives a copy of the appraisal summary from the preceding donee.

(4) *Donees that transfer property to successor donees.* In addition to complying with the requirements of paragraph (a)(1) of this section, every donee that transfers any charitable deduction property to a successor donee to which this section applies within the 2-year period described in paragraph (a)(1) of this section—

(i) Shall provide its name, address, and employer identification number and a copy of the appraisal summary (as described in §1.170A–13(c)(4)) relating to the transferred property to the successor donee on or before the 15th day after the latest of—

(A) The date of such transfer, or

(B) The date the original donee signs the appraisal summary, or

(C) In a case in which the transferring donee is a successor donee, the date such donee receives a copy of the appraisal summary from such donee's transferor, and

(ii) Shall provide a copy of its information return required by paragraph (a)(1) this section to the successor donee on or before the 15th day after the transferring donee files the information return pursuant to paragraph (e)(2) of this section.

(5) *Donee*. In the case of charitable deduction property that is transferred to a successor donee to which this section applies, the term *donee* as used in paragraph (a)(2) and (e) of this section means only the original donee.

(d) *Special rules*—(1) *Statement to be furnished to donors*. Every donee making a return under section 6050L and this section with respect to the disposition of charitable deduction property shall furnish a copy of the return to the donor of the property.

(2) *Retention of appraisal summary*. Every donee shall retain the appraisal summary described in §1.170A–13(c)(4) in the donee's records for so long as it may be relevant in the administration of any internal revenue law.

(e) *Charitable deduction property*. For purposes of this section, the term *charitable deduction property* means any property (other than money and publicly traded securities to which §1.170A–13(c)(7)(xi)(B) does not apply) contributed after December 31, 1984, with respect to which the donee signs (or is presented with for signature in cases described in §1.170A–13(c)(4)(iv)(C)(*2*)) an appraisal summary (as required by §1.170A–13(c)(4)(i)(B)). For purposes of this section, if such donee signs (or is presented with for signature in cases described in §1.170A–13(c)(4)(iv)(C)(*2*)) the appraisal summary after the date of contribution of the property, the property is deemed to be charitable deduction property from the date of contribution.

(f) *Place and time for filing information returns*—(1) *Place for filing*. The donee information return required by section 6050L and this section shall be filed with the Internal Revenue Service center listed on the return form or its instructions.

(2) *Time for filing*—(i) *In general*. Except as provided in paragraph (f)(2)(ii) of this section, the donee information return shall be filed on or before the 125th day after a donee sells, exchanges, consumes or otherwise disposes of the charitable deduction property. A donee information return filed pursuant to this paragraph (f)(2)(i) does not have to include the information required by paragraphs (b) (3), (4), (5), or (6), or (c)(2)(i)–(iii) of this section if such information is not available to the donee by the due date of the return.

(ii) *Exception*. Notwithstanding paragraph (f)(2)(i) of this section, in the case of a donee who, on the date of receipt of the transferred property, had no reason to believe that the substantiation requirements of §1.170A–13(c) apply with respect to the property, the donee information return is not required to be filed until the 60th day after the later of May 5, 1988, or the date on which such donee has reason to believe that the substantiation requirements of §1.170A–13(c) apply with respect to the property. A donee information return filed pursuant to this paragraph (f)(2)(ii) does not have to include the information required by paragraph (b) (3), (4), (5), or (6), or (c)(2)(i)–(iii) of this section if such information is not available to the donee by the due date of the return.

(g) *Penalties*. For penalties for failure to compy with the requirements of this section, see sections 6676, 6721, and 6723.

[T.D. 8199, 53 FR 16085, May 5, 1988; T.D. 8199, 53 FR 18372, May 23, 1988]

§ 1.6050M–1 Information returns relating to persons receiving contracts from certain Federal executive agencies.

(a) *General rule*. Except as otherwise provided in paragraph (c) of this section, the head of every Federal executive agency or his or her delegate shall make an information return to the Internal Revenue Service reporting the following information with respect to each contract entered into by that Federal executive agency—

(1) Name and address of the contractor;

(2) Contractor's TIN and, if the contractor is a member of an affiliated group of corporations that files its Federal income tax returns on a consolidated basis, the name and TIN of the common parent of the affiliated group;

(3) The date of the contract action;

(4) The expected date of completion of the contract as determined under any reasonable method, such as the expected contract delivery date under the contract schedule;

(5) The total amount obligated under the contract action; and

(6) Any other information required by Forms 8596 and 8596A and their instructions, or by any other administrative guidance issued by the Internal Revenue Service (such as a revenue procedure).

See paragraph (e) of this section relating to the manner in which to report increases in amounts obligated under existing contracts. See paragraph (d)(5) of this section for special rules for agencies that submit contract information to the Federal Procurement Data Center. For provisions concerning the requesting and furnishing of identifying numbers, see section 6109 and the regulations thereunder.

(b) *Definitions*. The following definitions apply for purposes of this section—

(1) *Federal executive agency*. The term ''Federal executive agency'' means—

(i) Any executive agency (as defined in 5 U.S.C. 105) other than the General Accounting Office;

(ii) Any military department (as defined in 5 U.S.C. 102); and

(iii) The United States Postal Service and the Postal Rate Commission.

(2) *Contract*—(i) *General rule*. The term ''contract'' means an obligation of a Federal executive agency to make payment of money (or other property) to a person in return for the sale of property, the rendering of services, or other consideration. The term ''contract'' includes, for example, such an obligation arising from a written agreement executed by the agency and the contractor, an award or notice of award, a job order or task letter issued under a basic ordering agreement, a letter contract, an order that becomes effective only upon written acceptance or performance, or an action described in paragraph (e) of this section.

(ii) *Exceptions*. For purposes of this section, the term ''contract'' does not include—

(A) A license granted by a Federal executive agency;

(B) An obligation of a contractor (other than a Federal executive agency) to a subcontractor;

(C) A debt instrument of the United States Government or a Federal agency, such as a Treasury note, Treasury bond, Treasury bill, savings bond, or similar instrument; or

(D) An obligation of a Federal executive agency to lend money, lease property to a lessee, or sell property.

(iii) *Special rule for certain contracts of the Small Business Administration*. Any subcontract entered into by the Small Business Administration (SBA) under a prime contract between the SBA and a procuring Federal executive agency pursuant to section 8(a) of the Small Business Act (15 U.S.C. 637(a)) shall not be treated as a contract of the SBA but shall be treated as a contract of the procuring agency for purposes of this section.

(iv) *Certain schedule contracts*. For purposes of this section, any of the following contracts entered into on behalf of one or more Federal executive agencies is not a ''contract'' to be reported by the General Services Administration or the Department of Veteran's Affairs at the time of execution:

(A) A Federal Supply Schedule Contract entered into by the General Services Administration,

(B) An Automated Data Processing Schedule Contract entered into by the General Services Administration, or

(C) A schedule contract entered into by the Department of Veteran's Affairs.

Instead, an order placed by a Federal executive agency, including the General Services Administration or the Department of Veteran's Affairs, under such a schedule contract is a ''contract'' for purposes of this section.

(v) *Blanket purchase agreements*. For purposes of this section, the term *contract* does not include a blanket purchase agreement between one or more Federal executive agencies and one or more contractors. Instead, an order

placed by a Federal executive agency under the terms of a blanket purchase agreement is a ''contract'' for purposes of this section.

(vi) *Contracts entered into using non-appropriated funds.* [Reserved]

(3) *Contractor.* The term *contractor* means any person who enters into a contract with a Federal executive agency.

(4) *Person and TIN.* The terms *person* and *TIN* are defined in sections 7701(a)(1) and (41), respectively.

(c) *Exceptions to information reporting requirement*—(1) *General exceptions.* The following do not need to be reported pursuant to this section:

(i) Any contract or contract action for which the amount obligated is $25,000 or less;

(ii) Any contract with a contractor who, in making the agreement, is acting in his or her capacity as an employee of a Federal executive agency (*e.g.*, any contract of employment under which the employee is paid wages subject to the withholding provisions contained in chapter 24 of subtitle C);

(iii) Any contract between a Federal executive agency and another Federal governmental unit (or any agency or instrumentality thereof);

(iv) Any contract with a foreign government (or any agency or instrumentality thereof);

(v) Any contract with a state or local governmental unit (or any agency or instrumentality thereof);

(vi) Any contract with a person who is not required to have a TIN (see, for example, § 301.6109–1(g));

(vii) Any contract the terms of which provide that all amounts payable under the contract by any Federal executive agency will be paid on or before the 120th day following the date of the contract action, and for which it is reasonable to except that all amounts will be so paid.

(viii) Any contract under which all money (or other property) that will be received by the contractor after the 120th day after the date of the contract action will come from persons other than a Federal executive agency or an agent of such an agency (*e.g.*, a contract under which the contractor will collect amounts owed to a Federal executive agency by the agency's debtor and will remit to the agency the money collected less an amount that serves as the contractor's consideration under the contract).

(ix) Any contract for which the Commissioner determines that the information described in paragraph (a) of this section will not facilitate the collection of Federal tax liabilities because of the manner, method, or timing of payment by the agency under that contract.

(2) *Special rule for certain classified or confidential contracts.* Contracts described in section 6050M(e)(3), relating to certain classified or confidential contracts, are to be reported only in accordance with section 6050M(e)(2).

(d) *Filing requirements*—(1) *Frequency and time for filing.* The information returns required by this section with respect to contracts of a Federal executive agency entered into on or after January 1, 1989, must be filed on a quarterly basis for the calendar quarters ending on the last day of March, June, September, and December. Except as provided in paragraph (d)(5) of this section, the returns for contracts entered into during a calendar quarter must be filed on or before the last day of the month following that quarter. Notwithstanding the preceding sentence, returns filed before May 7, 1990, will be considered timely filed.

(2) *Form of reporting*—(i) *General rule concerning magnetic media.* The information returns required by this section with respect to contracts of a Federal executive agency for each calendar quarter shall be made in one submission (or in multiple submissions if permitted by paragraph (d)(4) of this section). Except as provided in paragraph (d)(2)(ii) of this section, the required returns shall be made on magnetic media (within the meaning of § 301.6011–2(a)(1)) in accordance with any applicable revenue procedure or other guidance promulgated by the Internal Revenue Service for the filing of such returns under section 6050M.

(ii) *Magnetic media exception for low-volume filers.* Any Federal executive agency that on any October 1 has a reasonable expectation of entering into, during the one year period beginning on that date, fewer than 250 contracts

that are subject to the reporting requirements under this section may make the information returns required by this section for each quarter of that one year period on the prescribed paper Form 8596 in accordance with the instructions accompanying such form.

(3) *Place of filing*—(i) *Returns on magnetic media*. Information returns made under this section on magnetic media shall be filed with the Internal Revenue Service at the Martinsburg Computing Center, Martinsburg, West Virginia 25401–1359, in accordance with any applicable revenue procedure or other guidance promulgated by the Internal Revenue Service relating to the filing of returns under section 6050M.

(ii) *Form 8596*. Information returns made on Form 8596 shall be filed with the Ifternal Revenue Service at the location specified in the instructions for that form.

(4) *Special rule concerning multiple returns*. To the extent permitted in any revenue procedure or other guidance relating to the filing of information returns under this section, a Federal executive agency which files information returns under this section on magnetic media may make more than one magnetic media submission for any quarter, if each submission for that quarter contains all of the information required by paragraph (a) of this section with respect to contracts entered into by one or more departments, branches, bureaus, agencies, or other readily identifiable operating functions (such as a geographic region) of the Federal executive agency.

(5) *Special rules for agencies reporting to the Federal Procurement Data Center*—(i) *Election to have the Director of the Federal Procurement Data Center make returns on behalf of agency*. If, in complying with the requirements of the Federal Procurement Data System (FPDS) (as established under the authority of the Office of Federal Procurement Policy Act, as amended, 41 U.S.C. 401 *et seq.*), a Federal executive agency is required to submit to the Federal Procurement Data Center (FPDC) all the information with respect to one or more contracts required to be reported by paragraph (a) of this section, that Federal executive agency may, in lieu of making returns directly to the Internal Revenue Service with respect to those contracts, elect to have the Director of the FPDC (or his or her delegate) make the required returns with respect to all of those contracts on its behalf. In order to make this election for such contracts entered into during a calendar quarter, the head of a Federal executive agency (or his or her delegate) shall attach to its submission to the FPDC for that quarter a signed statement to the effect that:

(A) The Director of the FPDC (or his or her delegate) is authorized, in accordance with an election made under 26 CFR 1.6050M–1(d)(5) to make, on the agency's behalf, the required returns for such contracts for that quarter, and

(B) Under the penalties of perjury, such official has examined the information to be submitted by the agency to the FPDC for making those returns and certifies that information to be, to the best of such official's knowledge and belief, a compilation of agency records maintained in the normal course of business for the purpose of providing the information necessary for making true, correct, and complete returns as required by section 6050M.

If the election is made, the Director of the FPDC (or his or her delegate) shall, on the electing agency's behalf, make the returns required by paragraph (a) of this section with respect to the contracts to which the election applies.

(ii) *Time, manner, and place of filing*. The Director of the FPDC (or his or her delegate) must—

(A) Make the required returns for a quarter on or before the earlier of;

(*1*) 45 days following the date that the contract information is required to be submitted to the FPDC, or

(*2*) 90 days following the end of the calendar quarter for which the election is made, except that, if that calendar quarter ends September 30, 105 days following the end of that quarter, and

(B) Comply with paragraph (d)(2)(i) and (3)(i) of this section, relating to form and place of filing.

Notwithstanding the preceding sentence, returns made before May 7, 1990, will be considered timely filed.

(iii) *Contracts reported directly to the Internal Revenue Service*. Even if the election is made, all information with

respect to any particular contract required to be reported under paragraph (a) of this section must be reported directly to the Internal Revenue Service by the electing agency if the FPDS does not require that information to be submitted to the FPDC. An electing agency shall not, however, make direct returns to the Internal Revenue Service of contract information that is subject to the election.

(6) *Certification of return*—(i) *Returns made directly with the Internal Revenue Service.* Each return made under this section by a Federal executive agency directly with the Internal Revenue Service on magnetic media or on Forms 8596 and 8596–A shall be signed by the head of the Federal executive agency (or his or her delegate) under the penalties of perjury, certifying that such official has examined the return, that it is prepared pursuant to the requirements of section 6050M and that, to the best of such official's knowledge and belief, it is compiled from agency records maintained in the normal course of business for the purpose of making a true, correct, and complete return as required by section 6050M.

(ii) *Returns made by Director of FPDC on agency's behalf.* Each return made under this section by the Director of the FPDC on behalf of a Federal executive agency shall be signed by the Director of the FPDC (or his or her delegate) under the penalties of perjury, certifying that such official has examined the return, that it is prepared pursuant to the requirements of section 6050M and that, to the best of such official's knowledge and belief, it is compiled from information submitted by the Federal executive agency to the FPDC pursuant to §1.6050M–1(d)(5)(i) for the purpose of making a true, correct, and complete return as required by section 6050M.

(e) *Special rules relating to increases in amount obligated.* If, through the exercise of an option contained in a basic or initial contract or under any other rule of contract law, express or implied, the amount of money or other property obligated under the contract is increased by more than $25,000 in one contract action, then that action shall be treated as the entering into of a new contract with respect to which the information required by paragraph (a) of this section is to be reported to the Internal Revenue Service for the calendar quarter in which the increase occurs.

(f) *Effective date*—(1) *Contracts required to be reported.* Except as otherwise provided in this paragraph (f), this section applies to each Federal executive agency with respect to its contracts entered into on or after January 1, 1989 (including any increase in amount obligated on or after January 1, 1989, that is treated as a new contract under paragraph (e) of this section).

(2) *Contracts not required to be reported.* A Federal executive agency is not required to report—

(i) Any basic or initial contract entered into before January 1, 1989,

(ii) Any increase contract action occurring before January 1, 1989, that is treated as a new contract under paragraph (e) of this section, or

(iii) Any increase contract action that is treated as a new contract under paragraph (e) of this section if the basic or initial contract to which that contract action relates was entered into before January 1, 1989, and—

(A) The increase occurs before April 1, 1990, or

(B) The amount of the increase does not exceed $50,000.

(3) *Illustration*—(i) If Federal executive agency enters into an initial contract on December 1, 1988, and the amount of money obligated under the contract is increased by $55,000 on April 15, 1990, then (A) there is no reporting requirement with respect to the contract when entered into on December 1, 1988, and (B) the April 15, 1990, increase, which is treated as a new contract under paragraph (e) of this section, is subject to the reporting requirements of this section because it is considered to be a new contract entered into on April 15, 1990.

(ii) If the $55,000 increase had occurred before April 1, 1990, there would have been no reporting requirement with respect to that increase.

[T.D. 8275, 54 FR 50369, Dec. 6, 1989; 55 FR 13522, Apr. 11, 1990]

§ 1.6050N–1 Statements to recipients of royalties paid after December 31, 1986.

(a) *Requirement.* A person required to make an information return under section 6050N(a) must furnish a statement to each recipient whose name is required to be shown on the related information return for royalties paid.

(b) *Form, manner, and time for providing statements to recipients.* The statement required by paragraph (a) of this section must be either the official Form 1099 prescribed by the Internal Revenue Service for the respective calendar year or an acceptable substitute statement. The rules under § 1.6042–4 (relating to statements with respect to dividends) apply comparably in determining the form of the acceptable substitute statement permitted by this section. Those rules also apply for purposes of determining the manner of and time for providing the Form 1099 or its acceptable substitute statement to a recipient under this section.

(c) *Exempted foreign-related items*—(1) *In general.* No return shall be required under paragraph (a) of this section for payments of the items described in paragraphs (c)(1)(i) through (iv) of this section.

(i) Returns of information are not required for payments of royalties that a payor can, prior to payment, associate with documentation upon which it may rely to treat as made to a foreign beneficial owner in accordance with § 1.1441–1(e)(1)(ii) or as made to a foreign payee in accordance with § 1.6049–5(d)(1) or presumed to be made to a foreign payee under § 1.6049-5(d)(2), (3), (4), or (5). However, such payments may be reportable under § 1.1461–1(b) and (c).

For purposes of this paragraph (c)(1)(i), the provisions in § 1.6049–5(c) (regarding rules applicable to documentation of foreign status and definition of U.S. payor and non-U.S. payor) shall apply. See § 1.1441–1(b)(3)(iii)(B) and (C) for special payee rules regarding scholarships, grants, pensions, annuities, etc. The provisions of § 1.1441–1 shall apply by substituting the term *payor* for the term *withholding agent* and without regard to the fact that the provisions apply only to amounts subject to withholding under chapter 3 of the Internal Revenue Code.

(ii) Returns of information are not required for payments of royalties from sources outside the United States (determined under Part I of subchapter N and the regulations under these provisions) made outside the United States by a non-U.S. payor or non-U.S. middleman. For a definition of non-U.S. payor or non-U.S. middleman, see § 1.6049–5(c)(5). For circumstances in which a payment is considered to be made outside the United States, see § 1.6049–5(e).

(iii) Returns of information are not required for payments made by a foreign intermediary described in § 1.1441–1(e)(3)(i) that it has received in its capacity as an intermediary and that are associated with a valid withholding certificate described in § 1.1441–1(e)(3)(ii) or (iii) and payments made by a U.S. branch of a foreign bank or of a foreign insurance company described in § 1.1441–1(b)(2)(iv) that are associated with a valid withholding certificate described in § 1.1441–1(e)(3)(v), which certificate the intermediary or branch has furnished to the payor or middleman from whom it has received the payment, unless, and to the extent, the intermediary or branch knows that the payments are required to be reported and were not so reported.

(2) *Definitions*—(i) *Payor.* For purposes of this section, the term *payor* shall have the meaning ascribed to it under § 1.6049–4(a).

(ii) *Joint owners.* Amounts paid to joint owners for which a certificate or documentation is required as a condition for being exempt from reporting under this paragraph (c) of this section are presumed made to U.S. payees who are not exempt recipients if, prior to payment, the payor cannot reliably associate the payment either with a Form W–9 furnished by one of the joint owners in the manner required in §§ 31.3406(d)-1 through 31.3406(d)-5 of this chapter, or with documentation described in paragraph (c)(1)(i) of this section furnished by each joint owner upon which it can rely to treat each joint owner as a foreign payee or foreign beneficial owner. For purposes of applying this paragraph (c)(2)(ii), the grace period described in § 1.6049–5(d)(2)(ii) shall apply only if each payee qualifies for such grace period.

(d) *Cross-reference to penalties.* For provisions relating to the penalty provided for failure to file timely a correct information return required under section 6050N(a), see § 301.6721–1 of this chapter (Procedure and Administration Regulations). For provisions relating to the penalty provided for failure to furnish timely a correct payee statement required under section 6050N(b) and § 1.6050N–1(a), see § 301.6722–1 of this chapter. See § 301.6724–1 of this chapter for the waiver of a penalty if the failure is due to reasonable cause and is not due to willful neglect.

(e) *Effective date*—This section, except paragraph (c), applies to payee statements due after December 31, 1995, without regard to extensions. For further guidance regarding the substantially similar statement mailing requirements that apply with respect to forms required to be filed after October 22, 1986, and before January 1, 1996 (see Rev. Proc. 84–70 (1984–2 C.B. 716) and § 601.601(d)(2) of this chapter). The provisions of paragraph (c) of this section apply to payments made after December 31, 2000.

[T.D. 8637, 60 FR 66111, Dec. 21, 1995, as amended by T.D. 8734, 62 FR 53492, Oct. 14, 1997; T.D. 8804, 63 FR 72188, Dec. 31, 1998; T.D. 8856, 64 FR 73412, Dec. 30, 1999]

§ 1.6050P–0 Table of contents.

This section lists the major captions that appear in § 1.6050P–1.

§ 1.6050P–1 Information reporting for discharges of indebtedness by certain financial entities.

(a) Reporting requirement.
(1) In general.
(2) No aggregation.
(3) Amounts not includible in income.
(4) Time and place for reporting.
(i) In general.
(ii) Indebtedness discharged in bankruptcy.
(b) Date of discharge.
(1) In general.
(2) Identifiable events.
(i) In general.
(ii) Statute of limitations.
(iii) Decision to discontinue collection activity; creditor's defined policy.
(iv) Expiration of non-payment testing period.
(3) Permitted reporting.
(c) Indebtedness.
(d) Exceptions from reporting requirement.
(1) Certain bankruptcy discharges.
(i) In general.
(ii) Business or investment debt.
(2) Interest.
(3) Non-principal amounts in lending transactions.
(4) Indebtedness of foreign persons held by foreign branches of U.S. financial institutions.
(i) Reporting requirements.
(ii) Definition.
(5) Acquisition of indebtedness by related party.
(6) Releases.
(7) Guarantors and sureties.
(e) Additional rules.
(1) Multiple debtors.
(i) In general.
(ii) Amount to be reported.
(2) Multiple creditors.
(i) In general.
(ii) Partnerships.
(iii) Pass-through securitized indebtedness arrangement.
(A) Reporting requirements.
(B) Definition.
(iv) REMICs.
(3) Coordination with reporting under section 6050J.
(4) Direct or indirect subsidiary.
(5) Use of magnetic media.
(6) TIN solicitation requirement.
(i) In general.
(ii) Manner of soliciting TIN.
(7) Recordkeeping requirements.
(8) No multiple reporting.
(f) Requirement to furnish statement.
(1) In general.
(2) Furnishing copy of Form 1099–C.
(3) Time and place for furnishing statement.
(g) Penalties.
(h) Effective dates.
(1) In general.
(2) Earlier application.

[T.D. 8654, 61 FR 268, Jan. 4, 1996]

§ 1.6050P–1 Information reporting for discharges of indebtedness by certain financial entities.

(a) *Reporting requirement*—(1) *In general.* Except as provided in paragraph (d) of this section, any applicable financial entity (as defined in section 6050P(c)(1)) that discharges an indebtedness of any person (within the meaning of section 7701(a)(1)) of at least $600 during a calendar year must file an information return on Form 1099–C with the Internal Revenue Service. Solely for purposes of the reporting requirements of section 6050P and this section, a discharge of indebtedness is deemed to have occurred, except as provided in paragraph (b)(3) of this section, if and only if there has occurred an identifiable event described in paragraph (b)(2)

of this section, whether or not an actual discharge of indebtedness has occurred on or before the date on which the identifiable event has occurred. The return must include the following information—

(i) The name, address, and taxpayer identification number (TIN), as defined in section 7701(a)(41), of each person for which there was an identifiable event during the calendar year;

(ii) The date on which the identifiable event occurred, as described in paragraph (b) of this section;

(iii) The amount of indebtedness discharged, as described in paragraph (c) of this section;

(iv) An indication whether the identifiable event was a discharge of indebtedness in a bankruptcy, if known; and

(v) Any other information required by Form 1099–C or its instructions, or current revenue procedures.

(2) *No aggregation*. For purposes of reporting under this section, multiple discharges of indebtedness of less than $600 are not required to be aggregated unless such separate discharges are pursuant to a plan to evade the reporting requirements of this section.

(3) *Amounts not includible in income*. Except as otherwise provided in this section, discharged indebtedness must be reported regardless of whether the debtor is subject to tax on the discharged debt under sections 61 and 108 or otherwise by applicable law.

(4) *Time and place for reporting*— (i) *In general*. Except as provided in paragraph (a)(4)(ii) of this section, returns required by this section must be filed with the Internal Revenue Service office designated in the instructions for Form 1099-C on or before February 28 (March 31 if filed electronically) of the year following the calendar year in which the identifiable event occurs.

(ii) *Indebtedness discharged in bankruptcy*. Indebtedness discharged in bankruptcy that is required to be reported under this section must be reported for the later of the calendar year in which the amount of discharged indebtedness first becomes ascertainable, or the calendar year in which the identifiable event occurs.

(b) *Date of discharge*—(1) *In general*. Solely for purposes of this section, except as provided in paragraph (b)(3) of this section, indebtedness is discharged on the date of the occurrence of an identifiable event specified in paragraph (b)(2) of this section.

(2) *Identifiable events*—(i) *In general*. An identifiable event is—

(A) A discharge of indebtedness under title 11 of the United States Code (bankruptcy);

(B) A cancellation or extinguishment of an indebtedness that renders a debt unenforceable in a receivership, foreclosure, or similar proceeding in a federal or State court, as described in section 368(a)(3)(A)(ii) (other than a discharge described in paragraph (b)(2)(i)(A) of this section);

(C) A cancellation or extinguishment of an indebtedness upon the expiration of the statute of limitations for collection of an indebtedness, subject to the limitations described in paragraph (b)(2)(ii) of this section, or upon the expiration of a statutory period for filing a claim or commencing a deficiency judgment proceeding;

(D) A cancellation or extinguishment of an indebtedness pursuant to an election of foreclosure remedies by a creditor that statutorily extinguishes or bars the creditor's right to pursue collection of the indebtedness;

(E) A cancellation or extinguishment of an indebtedness that renders a debt unenforceable pursuant to a probate or similar proceeding;

(F) A discharge of indebtedness pursuant to an agreement between an applicable financial entity and a debtor to discharge indebtedness at less than full consideration;

(G) A discharge of indebtedness pursuant to a decision by the creditor, or the application of a defined policy of the creditor, to discontinue collection activity and discharge debt; or

(H) The expiration of the non-payment testing period, as described in paragraph (b)(2)(iv) of this section.

(ii) *Statute of limitations*. In the case of an expiration of the statute of limitations for collection of an indebtedness, an identifiable event occurs under paragraph (b)(2)(i)(C) of this section only if, and at such time as, a debtor's affirmative statute of limitations defense is upheld in a final judgment or decision of a judicial proceeding, and

the period for appealing the judgment or decision has expired.

(iii) *Decision to discontinue collection activity; creditor's defined policy*. For purposes of the identifiable event described in paragraph (b)(2)(i)(G) of this section, a creditor's defined policy includes both a written policy of the creditor and the creditor's established business practice. Thus, for example, a creditor's established practice to discontinue collection activity and abandon debts upon expiration of a particular non-payment period is considered a defined policy for purposes of paragraph (b)(2)(i)(G) of this section.

(iv) *Expiration of non-payment testing period*. There is a rebuttable presumption that an identifiable event under paragraph (b)(2)(i)(H) of this section has occurred during a calendar year if a creditor has not received a payment on an indebtedness at any time during a testing period (as defined in this paragraph (b)(2)(iv)) ending at the close of the year. The testing period is a 36-month period increased by the number of calendar months during all or part of which the creditor was precluded from engaging in collection activity by a stay in bankruptcy or similar bar under state or local law. The presumption that an identifiable event has occurred may be rebutted by the creditor if the creditor (or a third-party collection agency on behalf of the creditor) has engaged in significant, bona fide collection activity at any time during the 12-month period ending at the close of the calendar year, or if facts and circumstances existing as of January 31 of the calendar year following expiration of the 36-month period indicate that the indebtedness has not been discharged. For purposes of this paragraph (b)(2)(iv)—

(A) Significant, bona fide collection activity does not include merely nominal or ministerial collection action, such as an automated mailing;

(B) Facts and circumstances indicating that an indebtedness has not been discharged include the existence of a lien relating to the indebtedness against the debtor (to the extent of the value of the security), or the sale or packaging for sale of the indebtedness by the creditor; and

(C) In no event will an identifiable event described in paragraph (b)(2)(i)(H) of this section occur prior to December 31, 1997.

(3) *Permitted reporting*. If a discharge of indebtedness occurs before the date on which an identifiable event occurs, the discharge may, at the creditor's discretion, be reported under this section.

(c) *Indebtedness*. For purposes of this section, indebtedness means any amount owed to an applicable financial entity, including stated principal, fees, stated interest, penalties, administrative costs and fines. The amount of indebtedness discharged may represent all, or only a part, of the total amount owed to the applicable financial entity.

(d) *Exceptions from reporting requirement*—(1) *Certain bankruptcy discharges*—(i) *In general*. Reporting is required under this section in the case of a discharge of indebtedness in bankruptcy only if the creditor knows from information included in the reporting entity's books and records pertaining to the indebtedness that the debt was incurred for business or investment purposes as defined in paragraph (d)(1)(ii) of this section.

(ii) *Business or investment debt*. Indebtedness is considered incurred for business purposes if it is incurred in connection with the conduct of any trade or business other than the trade or business of performing services as an employee. Indebtedness is considered incurred for investment purposes if it is incurred to purchase property held for investment, as defined in section 163(d)(5).

(2) *Interest*. The discharge of an amount of indebtedness that is interest is not required to be reported under this section.

(3) *Non-principal amounts in lending transactions*. In the case of a lending transaction, the discharge of an amount other than stated principal is not required to be reported under this section. For this purpose, a lending transaction is any transaction in which a lender loans money to, or makes advances on behalf of, a borrower (including revolving credits and lines of credit).

(4) *Indebtedness of foreign debtors held by foreign branches of U.S. financial institutions*—(i) *Reporting requirements.* [Reserved]

(ii) *Definition.* An indebtedness held by a foreign branch of a U.S. financial institution is described in this paragraph (d)(4) only if—

(A) The financial institution is engaged through a branch or office in the active conduct of a banking or similar business outside the United States;

(B) The branch or office is a permanent place of business that is regularly maintained, occupied, and used to carry on a banking or similar financial business;

(C) The business is conducted by at least one employee of the branch or office who is regularly in attendance at such place of business during normal working hours;

(D) The indebtedness is extended outside of the United States by the branch or office in connection with that trade or business; and

(E) The financial institution does not know or have reason to know that the debtor is a United States person.

(5) *Acquisition of indebtedness by related party.* No reporting is required under this section in the case of a deemed discharge of indebtedness under section 108(e)(4) (relating to the acquisition of an indebtedness by a person related to the debtor), unless the disposition of the indebtedness by the creditor was made with a view to avoiding the reporting requirements of this section.

(6) *Releases.* The release of a co-obligor is not required to be reported under this section if the remaining debtors remain liable for the full amount of any unpaid indebtedness.

(7) *Guarantors and sureties.* Solely for purposes of the reporting requirements of this section, a guarantor is not a debtor. Thus, in the case of guaranteed indebtedness, reporting under this section is not required with respect to a guarantor, whether or not there has been a default and demand for payment made upon the guarantor.

(e) *Additional rules*—(1) *Multiple debtors*—(i) *In general.* In the case of indebtedness of $10,000 or more incurred on or after January 1, 1995, that involves more than one debtor, a reporting entity is subject to the requirements of paragraph (a) of this section for each debtor discharged from such indebtedness. In the case of indebtedness incurred prior to January 1, 1995, and indebtedness of less than $10,000 incurred on or after January 1, 1995, involving multiple debtors, reporting under this section is required only with respect to the primary (or first-named) debtor. Additionally, only one return of information is required under this section if the reporting entity knows, or has reason to know, that co-obligors were husband and wife living at the same address when an indebtedness was incurred, and does not know or have reason to know that such circumstances have changed at the date of a discharge of the indebtedness. This paragraph (e)(1) applies to discharges of indebtedness after December 31, 1994.

(ii) *Amount to be reported.* In the case of multiple debtors jointly and severally liable on an indebtedness, the amount of discharged indebtedness required to be reported under this section with respect to each debtor is the total amount of indebtedness discharged. For this purpose, multiple debtors are presumed to be jointly and severally liable on an indebtedness in the absence of clear and convincing evidence to the contrary.

(2) *Multiple creditors*—(i) *In general.* Except as otherwise provided in this paragraph (e)(2), if indebtedness is owned (or treated as owned for federal income tax purposes) by more than one creditor, each creditor that is an applicable financial entity must comply with the reporting requirements of this section with respect to any discharge of indebtedness of $600 or more allocable to such creditor. A creditor will be considered to have complied with the requirements of this section if a lead bank, fund administrator, or other designee of the creditor complies on its behalf in any reasonable manner, such as by filing a single return reporting the aggregate amount of indebtedness discharged, or by filing a return with respect to the portion of the discharged indebtedness allocable to the creditor. For purposes of this paragraph (e)(2)(i), any reasonable method may be used to determine the portion of discharged indebtedness allocable to each creditor.

(ii) *Partnerships*. For purposes of paragraph (e)(2)(i) of this section, indebtedness owned by a partnership is treated as owned by the partners.

(iii) *Pass-through securitized indebtedness arrangement*—(A) *Reporting requirements*. [Reserved]

(B) *Definition*. For purposes of this paragraph (e)(2)(iii), a pass-through securitized indebtedness arrangement is any arrangement whereby one or more debt obligations are pooled and held for twenty or more persons whose interests in the debt obligations are undivided co-ownership interests that are freely transferrable. Co-ownership interests that are actively traded personal property (as defined in § 1.1092(d)–1) are presumed to be freely transferrable and held by twenty or more persons.

(iv) *REMICs*. [Reserved]

(3) *Coordination with reporting under section 6050J*. If, in the same calendar year, a discharge of indebtedness reportable under section 6050P occurs in connection with a transaction also reportable under section 6050J (relating to foreclosures and abandonments of secured property), an applicable financial entity need not file both a Form 1099–A and a Form 1099–C with respect to the same debtor. The filing requirements of section 6050J will be satisfied with respect to a borrower if, in lieu of filing Form 1099–A, a Form 1099–C is filed in accordance with the instructions for the filing of that form. This paragraph (e)(3) applies to discharges of indebtedness after December 31, 1994.

(4) *Direct or indirect subsidiary*. For purposes of section 6050P(c)(1)(C), the term direct or indirect subsidiary means a corporation in a chain of corporations beginning with an entity described in section 6050P(c)(1)(A), if at least 50 percent of the total combined voting power of all classes of stock entitled to vote, or at least 50 percent of the total value of all classes of stock, of such corporation is directly owned by the entity described in section 6050P(c)(1)(A), or by one or more other corporations in the chain.

(5) *Use of magnetic media*. Any return required under this section must be filed on magnetic media to the extent required by section 6011(e) and the regulations thereunder. A failure to file on magnetic media when required constitutes a failure to file an information return under section 6721. Any person not required by section 6011(e) to file returns on magnetic media may request permission to do so under applicable regulations and revenue procedures.

(6) *TIN solicitation requirement*—(i) *In general*. For purposes of reporting under this section, a reasonable effort must be made to obtain the correct name/taxpayer identification number (TIN) combination of a person whose indebtedness is discharged. A TIN obtained at the time an indebtedness is incurred satisfies the requirement of this section, unless the entity required to file knows that such TIN is incorrect. If the TIN is not obtained prior to the occurrence of an identifiable event, it must be requested of the debtor for purposes of satisfying the requirement of this paragraph (e)(6).

(ii) *Manner of soliciting TIN*. Solicitations made in the manner described in § 301.6724–1(e)(1)(i) and (2) of this chapter will be deemed to have satisfied the reasonable effort requirement set forth in paragraph (e)(6)(i) of this section. A TIN solicitation made after the occurrence of an identifiable event must clearly notify the debtor that the Internal Revenue Service requires the debtor to furnish its TIN, and that failure to furnish such TIN may subject the debtor to a $50 penalty imposed by the Internal Revenue Service. A TIN provided under this section is not required to be certified under penalties of perjury.

(7) *Recordkeeping requirements*. Any applicable financial entity required to file a return with the Internal Revenue Service under this section must also retain a copy of the return, or have the ability to reconstruct the data required to be included on the return under paragraph (a)(1) of this section, for at least four years from the date such return is required to be filed under paragraph (a)(4) of this section.

(8) *No multiple reporting*. If discharged indebtedness is reported under this section, no further reporting under this section is required for the amount so reported, notwithstanding that a subsequent identifiable event occurs with respect to the same amount. Further,

no additional reporting or Form 1099–C correction is required if a creditor receives a payment of all or a portion of a discharged indebtedness reported under this section for a prior calendar year.

(f) *Requirement to furnish statement*—(1) *In general.* Any applicable financial entity required to file a return under this section must furnish to each person whose name is shown on such return a written statement that includes the following information—

(i) The information required by paragraph (a)(1) of this section;

(ii) The name, address, and TIN of the applicable financial entity required to file a return under paragraph (a) of this section;

(iii) A legend identifying the statement as important tax information that is being furnished to the Internal Revenue Service; and

(iv) Any other information required by Form 1099–C or its instructions, or current revenue procedures.

(2) *Furnishing copy of Form 1099–C.* The requirement to provide a statement to the debtor will be satisfied if the applicable financial entity furnishes copy B of the Form 1099–C or a substitute statement that complies with the requirements of the current revenue procedure for substitute Forms 1099.

(3) *Time and place for furnishing statement.* The statement required by this paragraph (f) must be furnished to the debtor on or before January 31 of the year following the calendar year in which the identifiable event occurs. The statement will be considered furnished to the debtor if it is mailed to the debtor's last known address.

(g) *Penalties.* For penalties for failure to comply with the requirements of this section, see sections 6721 through 6724.

(h) *Effective dates*—(1) *In general.* The rules in this section apply to discharges of indebtedness after December 21, 1996, except paragraphs (e)(1) and (e)(3) of this section, which apply to discharges of indebtedness after December 31, 1994.

(2) *Earlier application.* Notwithstanding the provisions of paragraph (h)(1) of this section, an applicable financial entity may, at its discretion, apply any of the provisions of this section to any discharge of indebtedness occurring on or after January 1, 1996, and before December 22, 1996.

[T.D. 8654, 61 FR 268, Jan. 4, 1996, as amended by T.D. 8895, 65 FR 50408, Aug. 18, 2000]

§ 1.6050S–1T Information reporting for payments and reimbursements or refunds of qualified tuition and related expenses (temporary).

(a) *Electronic furnishing of statements*—(1) *In general.* A person required by section 6050S(d) to furnish a written statement (furnisher) to the individual to whom it is required to be furnished (recipient) may furnish the statement in an electronic format in lieu of a paper format. A furnisher who meets the requirements of paragraphs (a)(2) through (7) of this section is treated as furnishing the statement in a timely manner.

(2) *Consent*—(i) *In general.* The recipient must have affirmatively consented to receive the statement in an electronic format and must not have withdrawn that consent before the statement is furnished. The consent must be made electronically in a manner that reasonably demonstrates that the recipient can access the statement in the electronic format in which it will be furnished to the recipient. Alternatively, the consent may be made in a different manner (for example, in an e-mail or in a paper document) if it is confirmed electronically in the manner described in the preceding sentence.

(ii) *Change in hardware or software requirements.* If a change in the hardware or software required to access the statement creates a material risk that the recipient will not be able to access the statement, the furnisher must, prior to changing the hardware or software, provide the recipient with a notice. The notice must describe the revised hardware and software required to access the statement and inform the recipient that a new consent to receive the statement in the revised electronic format must be provided to the furnisher. After implementing the revised hardware and software, the furnisher must obtain from the recipient, in the manner described in paragraph (a)(2)(i)

of this section, a new consent or confirmation of consent to receive the statement electronically.

(iii) *Example*. The following example illustrates the rules of this paragraph (a)(2):

Example. Furnisher F sends Recipient R an e-mail stating that R may consent to receive statements required by section 6050S(d) electronically on a website instead of in a paper format. The e-mail contains an attachment instructing R how to consent to receive the statements electronically. The e-mail attachment uses the same electronic format that F will use for the electronically furnished statements. R opens the attachment, reads the instructions, and submits the consent in the manner provided in the instructions. R has consented to receive the statements electronically in the manner described in paragraph (a)(2)(i) of this section.

(3) *Required disclosures*—(i) *In general*. Prior to, or at the time of, a recipient's consent, the furnisher must provide to the recipient a clear and conspicuous disclosure statement containing each of the disclosures described in paragraphs (a)(3)(ii) through (viii) of this section.

(ii) *Paper statement*. The recipient must be informed that the statement will be furnished on paper if the recipient does not consent to receive it electronically.

(iii) *Scope and duration of consent*. The recipient must be informed of the scope and duration of the consent. For example, the recipient must be informed whether the consent applies to statements furnished every year after the consent is given until it is withdrawn in the manner described in paragraph (a)(3)(v)(A) of this section or only to the statement required to be furnished on or before the January 31 immediately following the date on which the consent is given.

(iv) *Post-consent request for a paper statement*. The recipient must be informed of any procedure for obtaining a paper copy of the recipient's statement after giving the consent described in paragraph (a)(2)(i) of this section.

(v) *Withdrawal of consent*. The recipient must be informed that—

(A) The recipient may withdraw a consent at any time by furnishing the withdrawal in writing (electronically or on paper) to the person whose name, mailing address, telephone number, and e-mail address is provided in the disclosure statement;

(B) The furnisher will confirm the withdrawal in writing (either electronically or on paper); and

(C) A withdrawal of consent does not apply to a statement that was furnished electronically in the manner described in this paragraph (a) before the withdrawal of consent is furnished.

(vi) *Notice of termination*. The recipient must be informed of the conditions under which a furnisher will cease furnishing statements electronically to the recipient.

(vii) *Updating information*. The recipient must be informed of the procedures for updating the information needed by the furnisher to contact the recipient.

(viii) *Hardware and software requirements*. The recipient must be provided with a description of the hardware and software required to access, print, and retain the statement, and the date when the statement will no longer be available on the website.

(4) *Format*. The electronic version of the statement must contain all required information and comply with applicable revenue procedures relating to substitute statements to recipients.

(5) *Posting*. The furnisher must on or before January 31 of the year following the calendar year to which the statement relates (or such other date permitted or required for furnishing the statement) post it on a website accessible to the recipient.

(6) *Notice*—(i) *In general*. The furnisher must on or before January 31 of the year following the calendar year to which the statement relates (or such other date permitted or required for furnishing the statement) notify the recipient that the statement is posted on a website. The notice may be delivered by mail, electronic mail, or in person. The notice must provide instructions on how to access and print the statement. The notice must include the following statement in capital letters, ''IMPORTANT TAX RETURN DOCUMENT AVAILABLE.'' If the notice is provided by electronic mail, the foregoing statement should be on the subject line of the electronic mail and sent with high importance.

(ii) *Undeliverable electronic address.* If an electronic notice described in paragraph (a)(6)(i) of this section is returned as undeliverable, and the correct electronic address cannot be obtained from the furnisher's records or from the recipient, then the furnisher must furnish the notice by mail or in person within 30 days after the electronic notice is returned.

(iii) *Corrected statements.* A furnisher must notify a recipient that it has posted corrected statements on a website within 30 days of such posting in the manner described in paragraph (a)(6)(i) of this section. This notice must be furnished by mail or in person if—

(A) An electronic notice of the website posting of an original statement was returned as undeliverable; and

(B) The recipient has not provided a new e-mail address.

(7) *Retention.* The furnisher must maintain access to the statements on the website through October 15 of the year following the calendar year to which the statements relate (or the first business day after such October 15, if October 15 falls on a Saturday, Sunday, or legal holiday). The furnisher must maintain access to corrected statements that are posted on the website through October 15 of the year following the calendar year to which the statements relate (or the first business day after such October 15, if October 15 falls on a Saturday, Sunday, or legal holiday) or the date 90 days after the corrected statements are posted, whichever is later.

(b) *Effective date.* This section applies to statements required to be furnished under section 6050S(d) after December 31, 2000.

[T.D. 8942, 66 FR 10193, Feb. 14, 2001]

§ 1.6050S–2T Information reporting for payments of interest on qualified education loans (temporary).

(a) *Electronic furnishing of statements*—(1) *In general.* A person required by section 6050S(d) to furnish a written statement (furnisher) to the individual to whom it is required to be furnished (recipient) may furnish the statement in an electronic format in lieu of a paper format. A furnisher who meets the requirements of paragraphs (a)(2) through (7) of this section is treated as furnishing the statement in a timely manner.

(2) *Consent*—(i) *In general.* The recipient must have affirmatively consented to receive the statement in an electronic format and must not have withdrawn that consent before the statement is furnished. The consent must be made electronically in a manner that reasonably demonstrates that the recipient can access the statement in the electronic format in which it will be furnished to the recipient. Alternatively, the consent may be made in a different manner (for example, in an e-mail or in a paper document) if it is confirmed electronically in the manner described in the preceding sentence.

(ii) *Change in hardware or software requirements.* If a change in the hardware or software required to access the statement creates a material risk that the recipient will not be able to access the statement, the furnisher must, prior to changing the hardware or software, provide the recipient with a notice. The notice must describe the revised hardware and software required to access the statement and inform the recipient that a new consent to receive the statement in the revised electronic format must be provided to the furnisher. After implementing the revised hardware and software, the furnisher must obtain from the recipient, in the manner described in paragraph (a)(2)(i) of this section, a new consent or confirmation of consent to receive the statement electronically.

(iii) *Example.* The following example illustrates the rules of this paragraph (a)(2):

Example. Furnisher F sends Recipient R an e-mail stating that R may consent to receive statements required by section 6050S(d) electronically on a website instead of in a paper format. The e-mail contains an attachment instructing R how to consent to receive the statements electronically. The e-mail attachment uses the same electronic format that F will use for the electronically furnished statements. R opens the attachment, reads the instructions, and submits the consent in the manner provided in the instructions. R has consented to receive the statements electronically in the manner described in paragraph (a)(2)(i) of this section.

(3) *Required disclosures*—(i) *In general.* Prior to, or at the time of, a recipient's consent, the furnisher must provide to the recipient a clear and conspicuous disclosure statement containing each of the disclosures described in paragraphs (a)(3)(ii) through (viii) of this section.

(ii) *Paper statement.* The recipient must be informed that the statement will be furnished on paper if the recipient does not consent to receive it electronically.

(iii) *Scope and duration of consent.* The recipient must be informed of the scope and duration of the consent. For example, the recipient must be informed whether the consent applies to statements furnished every year after the consent is given until it is withdrawn in the manner described in paragraph (a)(3)(v)(A) of this section or only to the statement required to be furnished on or before the January 31 immediately following the date on which the consent is given.

(iv) *Post-consent request for a paper statement.* The recipient must be informed of any procedure for obtaining a paper copy of the recipient's statement after giving the consent described in paragraph (a)(2)(i) of this section.

(v) *Withdrawal of consent.* The recipient must be informed that—

(A) The recipient may withdraw a consent at any time by furnishing the withdrawal in writing (electronically or on paper) to the person whose name, mailing address, telephone number, and e-mail address is provided in the disclosure statement;

(B) The furnisher will confirm the withdrawal in writing (either electronically or on paper); and

(C) A withdrawal of consent does not apply to a statement that was furnished electronically in the manner described in this paragraph (a) before the withdrawal of consent is furnished.

(vi) *Notice of termination.* The recipient must be informed of the conditions under which a furnisher will cease furnishing statements electronically to the recipient.

(vii) *Updating information.* The recipient must be informed of the procedures for updating the information needed by the furnisher to contact the recipient.

(viii) *Hardware and software requirements.* The recipient must be provided with a description of the hardware and software required to access, print, and retain the statement, and the date when the statement will no longer be available on the website.

(4) *Format.* The electronic version of the statement must contain all required information and comply with applicable revenue procedures relating to substitute statements to recipients.

(5) *Posting.* The furnisher must on or before January 31 of the year following the calendar year to which the statement relates (or such other date permitted or required for furnishing the statement) post it on a website accessible to the recipient.

(6) *Notice*—(i) *In general.* The furnisher must on or before January 31 of the year following the calendar year to which the statement relates (or such other date permitted or required for furnishing the statement) notify the recipient that the statement is posted on a website. The notice may be delivered by mail, electronic mail, or in person. The notice must provide instructions on how to access and print the statement. The notice must include the following statement in capital letters, ''IMPORTANT TAX DOCUMENT RETURN AVAILABLE.'' If the notice is provided by electronic mail, the foregoing statement should be on the subject line of the electronic mail and sent with high importance.

(ii) *Undeliverable electronic address.* If an electronic notice described in paragraph (a)(6)(i) of this section is returned as undeliverable, and the correct electronic address cannot be obtained from the furnisher's records or from the recipient, then the furnisher must furnish the notice by mail or in person within 30 days after the electronic notice is returned.

(iii) *Corrected statements.* A furnisher must notify a recipient that it has posted corrected statements on a website within 30 days of such posting in the manner described in paragraph (a)(6)(i) of this section. This notice must be furnished by mail or in person if—

(A) An electronic notice of the website posting of an original statement was returned as undeliverable; and

(B) The recipient has not provided a new e-mail address.

(7) *Retention*. The furnisher must maintain access to the statements on the website through October 15 of the year following the calendar year to which the statements relate (or the first business day after such October 15, if October 15 falls on a Saturday, Sunday, or legal holiday). The furnisher must maintain access to corrected statements that are posted on the website through October 15 of the year following the calendar year to which the statements relate (or the first business day after such October 15, if October 15 falls on a Saturday, Sunday, or legal holiday) or the date 90 days after the corrected statements are posted, whichever is later.

(b) *Effective date*. This section applies to statements required to be furnished under section 6050S(d) after December 31, 2000.

[T.D. 8942, 66 FR 10193, Feb. 14, 2001]

§ 1.6052–1 Information returns regarding payment of wages in the form of group-term life insurance.

(a) *Requirement of reporting*—(1) *In general*. Every employer, who during any calendar year provides any one of his employees remuneration for services in the form of group-term life insurance on the life of such employee any part of the cost of which is to be included in such employee's gross income as provided in section 79(a), shall make a separate return on Form W–2 with respect to each such employee for such year which includes the following information:

(i) Name, address, and identifying number of the employer;

(ii) Name, address, and social security number of the employee; and

(iii) Total amount includible in the employee's gross income by reason of the provisions of section 79(a), computed as if each employee reported his income on the basis of a calendar year (determined as if the employer making such return is the only employer paying the employee remuneration in the form of group-term life insurance on his life which is includible in his gross income under section 79(a)).

Returns on Form W–2 required to be filed pursuant to the provisions of this section shall be transmitted by Form W–3. In a case where, with respect to the same employee, an employer must make a return on Form W–2 under this section and also under § 31.6011(a)–4 or § 31.6011(a)–5 of this chapter (Employment Tax Regulations), or under § 1.6041–2 (relating to return of information as to payments to employees), such employer may make such returns on the same Form W–2 or on separate Forms W–2. In a case where an employer must file a Form W–3 under this section and also under § 31.6011(a)–4 or § 31.6011(a)–5 of this chapter (Employment Tax Regulations), the Form W–3 filed under such § 31.6011(a)–4 or § 31.6011(a)–5 shall also be used as the transmittal form for a return on Form W–2 made pursuant to the provisions of this section.

(2) *Definitions*. Terms used in subparagraph (a)(1) of this section and in section 79 and the regulations thereunder have the meaning ascribed to them in section 79 and the regulations thereunder.

(b) *Time and place for filing*—(1) *Time for filing*—(i) *General rule*. In a case where an employer must file Forms W–3 and W–2 under this section and also under § 31.6011(a)–4 or § 31.6011(a)–5 of this chapter (Employment Tax Regulations), the time for filing such forms under this section shall be the same as the time (including extensions thereof) for filing such forms under § 31.6011(a)–4 or § 31.6011(a)–5.

(ii) *Exception*. In a case where an employer is not required to file Forms W–3 and W–2 under § 31.6011(a)–4 or § 31.6011(a)–5 of this chapter, returns on Forms W–3 and W–2 required under paragraph (a) of this section for any calendar year shall be filed on or before February 28 (March 31 if filed electronically) of the following year.

(iii) *Cross reference*. For extensions of time for filing returns, see section 6081 and the regulations thereunder.

(2) *Place for filing*. The returns on Forms W–3 and W–2 required under paragraph (a) of this section shall be filed pursuant to the rules contained in § 31.6091–1 of this chapter (Employment

Tax Regulations), relating to the place for filing certain returns.

(c) *Special rule for calendar years before 1972.* For calendar years before 1972, the provisions of this section will be deemed to have been complied with if the returns for such years were filed in accordance with the provisions of this section in effect prior to August 3, 1973, or with the instructions applicable to the appropriate forms.

(d) *Last day for filing return.* For provisions relating to the time for performance of an act when the last day prescribed for performance falls on Saturday, Sunday, or a legal holiday, see § 301.7503–1 of this chapter (Regulations on Procedure and Administration).

(e) *Penalty.* For provisions relating to the penalty provided for failure to file the information returns required by this section, see section 6652 and the regulations thereunder.

[T.D. 6888, 31 FR 9205, July 6, 1966, as amended by T.D. 7284, 38 FR 20828, Aug. 3, 1973; T.D. 7580, 43 FR 60160, Dec. 26, 1978; T.D. 7623, 44 FR 28800, May 17, 1979; T.D. 8895, 65 FR 50408, Aug. 18, 2000]

§ 1.6052–2 Statements to be furnished employees with respect to wages paid in the form of group-term life insurance.

(a) *Requirement.* Every employer filing a return under section 6052(a) and § 1.6052–1 with respect to group-term life insurance on the life of an employee shall furnish to the employee whose name is set forth in such return a written statement showing the information required by paragraph (b) of this section.

(b) *Form of statement.* The written statement required to be furnished to an employee under paragraph (a) of this section shall show:

(1) The total amount includible in the employee's gross income by reason of the provisions of section 79(a), but determined as if the employer furnishing such statement is the only employer paying the employee remuneration in the form of group-term life insurance on his life which is includible in his gross income under section 79(a).

(2) The name, address, and identifying number of the employer filing the statement.

The requirement of this section for the furnishing of a statement to an employee may be satisfied by the furnishing to such employee of a copy of the return filed pursuant to § 1.6052–1 in respect of such employee. A statement shall be considered to be furnished to a person within the meaning of this section if it is mailed to such person at his last known address.

(c) *Time for furnishing statements*—(1) *In general.* Each statement required by this section to be furnished to any employee for a calendar year shall be furnished to such person after the close of that year and on or before January 31 of the following year.

(2) *Extensions of time.* For good cause shown upon written application of the employer required to furnish statements under this section, the district director may grant an extension of time not exceeding 30 days in which to furnish such statements. The application shall be addressed to the district director with whom the income tax returns of the applicant are filed and shall contain a full recital of the reasons for requesting the extension to aid the district director in determining the period of the extension, if any, which will be granted. Such a request in the form of a letter to the district director signed by the applicant will suffice as an application. The application shall be filed on or before the date prescribed in subparagraph (1) of this paragraph for furnishing the statements required by this section.

(3) *Last day for furnishing statement.* For provisions relating to the time for performance of an act when the last day prescribed for performance falls on Saturday, Sunday, or a legal holiday, see § 301.7503–1 of this chapter (Regulations on Procedure and Administration).

(d) *Special rule where Form W–2 is used.* The provisions of this paragraph shall apply notwithstanding anything to the contrary in paragraph (b) or (c) of this section. The requirement of this section for the furnishing of a statement to an employee may be satisfied by furnishing to such employee the employee's copy of Form W–2 filed pursuant to § 1.6052–1 in respect of such employee. In a case where the statement

furnished by an employer to an employee for purposes of complying with this section is the employee's copy of a Form W–2, then the rules in § 31.6051–1 of this chapter (Employment Tax Regulations) shall apply with respect to the means and time (including extensions thereof) for furnishing such statements to the employee and making corrections on such form.

(e) *Definitions*. Terms used in this section and in section 79 and the regulations thereunder have the meaning ascribed to them in section 79 and the regulations thereunder.

(f) *Penalty*. For provisions relating to the penalty provided for failure to furnish a statement under this section, see section 6678 and the regulations thereunder.

(g) *Special rule for calendar years before 1972*. For calendar years before 1972, the provisions of this section will be deemed to have been complied with if the statements for such years were furnished in accordance with the provisions of this section in effect prior to August 3, 1973, or with the instructions applicable to the appropriate forms.

[T.D. 6888, 31 FR 9205, July 6, 1966, as amended by T.D. 7284, 38 FR 20828, Aug. 3, 1973; T.D. 7580, 43 FR 60160, Dec. 26, 1978; T.D. 7623, 44 FR 28800, May 17, 1979]

§ 1.6060–1 Reporting requirements for income tax return preparers.

(a) *In general*. (1) Each person who employs (or engages) one or more income tax return preparers to prepare any return of tax under subtitle A of the Internal Revenue Code of 1954 or claim for refund of tax under subtitle A of the Internal Revenue Code of 1954, other than for the person, at any time during a return period shall satisfy the requirements of section 6060 of the Code by:

(i) Retaining a record of the name, taxpayer identification number, and principal place of work during the return period of each income tax return preparer employed (or engaged) by the person at any time during that period; and

(ii) Making that record available for inspection upon request by the district director.

The record described in this paragraph (a) must be retained and kept available for inspection for the 3-year period following the close of the return period to which that record relates.

(2) The person may chose any form of documentation to be used under this section as a record of the preparers employed (or engaged) during a return period. However, the record must disclose on its face which individuals were employed (or engaged) as income tax return preparers during that period.

(3) For the definition of the term ''income tax return preparer'' (or ''preparer''), see section 7701(a)(36) and § 301.7701–15. For the definition of the term ''return period'', see paragraph (b) of this section.

(4)(i) For purposes of this section, any individual who, in acting as an income tax return preparer, is not employed by another income tax return preparer shall be treated as his (or her) own employer. Thus, a sole proprietor shall retain and make available a record with respect to himself (or herself) as provided in this section.

(ii) A partnership shall, for purposes of this section, be treated as the employer of the partners of the partnership and shall retain and make available a record with respect to the partners and others employed (or engaged) by the partnership as provided in this section.

(b) *Return period defined*. For purposes of this section, the term *return period* means the 12-month period beginning on July 1 of each year.

(c) *Penalty*. For the civil penalty for failure to retain and make available a record of the preparers employed (or engaged) during a return period as required under this section, or for failure to include an item in the record required to be retained and made available under this section, see § 1.6695–1(e).

[T.D. 7640, 44 FR 49451, Aug. 23, 1979]

SIGNING AND VERIFYING OF RETURNS AND OTHER DOCUMENTS

§ 1.6061–1 Signing of returns and other documents by individuals.

(a) *Requirement*. Each individual (including a fiduciary) shall sign the income tax return required to be made by him, except that the return may be signed for the taxpayer by an agent who is duly authorized in accordance

with paragraph (a)(5) or (b) of § 1.6012–1 to make such return. Other returns, statements, or documents required under the provisions of subtitle A or F of the Code or of the regulations thereunder to be made by any person with respect to any tax imposed by subtitle A of the Code shall be signed in accordance with any regulations contained in this chapter, or any instructions, issued with respect to such returns, statements, or other documents.

(b) *Cross references.* For provisions relating to the signing of returns, statements, or other documents required to be made by corporations and partnerships with respect to any tax imposed by subtitle A of the Code, see §§ 1.6062–1 and 1.6063–1, respectively. For provisions relating to the making of returns by agents, see paragraphs (a)(5) and (b) of § 1.6012–1; and to the making of returns for minors and persons under a disability, see paragraph (a)(4) of § 1.6012–1 and paragraph (b) of § 1.6012–3.

[T.D. 7332, 39 FR 44232, Dec. 23, 1974]

§ 1.6062–1 Signing of returns, statements, and other documents made by corporations.

(a) *Returns*—(1) *In general.* Returns required to be made by corporations under the provisions of subtitle A or F of the Code, or the regulations thereunder, with respect to any tax imposed by subtitle A of the Code, shall be signed for the corporation by the president, vice-president, treasurer, assistant treasurer, chief accounting officer, or any other officer duly authorized to sign such returns. It is not necessary that the corporate seal be affixed to the return. Spaces provided on return forms for affixing the corporate seal are for the convenience of corporations required by charter, or by law of the jurisdiction in which they are incorporated, to affix their corporate seals in the execution of instruments.

(2) *By fiduciaries.* A return with respect to income required to be made for a corporation by a fiduciary, pursuant to the provisions of section 6012(b)(3), shall be signed by such fiduciary. See paragraph (b)(4) of § 1.6012–3.

(3) *By agents.* A return with respect to income required to be made by an agent for a foreign corporation shall be signed by such agent. See paragraph (g) of § 1.6012–2.

(b) *Statements and other documents.* Statements and other documents required to be made by or for corporations under the provisions of subtitle A or F of the Code, or the regulations thereunder, with respect to any tax imposed by subtitle A, shall be signed in accordance with the regulations contained in this chapter, or the forms and instructions, issued with respect to such statements or other documents.

(c) *Evidence of authority to sign.* An individual's signature on a return, statement, or other document made by or for a corporation shall be prima facie evidence that such individual is authorized to sign such return, statement, or other document.

(d) *Related provisions.* For the rules realating to the verification of returns, see § 1.6065–1.

[T.D. 6500, 25 FR 12108, Nov. 26, 1960, as amended by T.D. 7293, 38 FR 32804, Nov. 28, 1973]

§ 1.6063–1 Signing of returns, statements, and other documents made by partnerships.

(a) *In general.* Returns, statements, and other documents required to be made by partnerships under the provisions of subtitle A or F of the Code, or the regulations thereunder, with respect to any tax imposed by subtitle A of the Code shall be signed by any one of the partners. However, with respect to the signing of powers of attorney, see paragraph (a)(2) of § 601.504 of this chapter (Statement of Procedural Rules).

(b) *Evidence of authority to sign.* A partner's signature on a return, statement, or other document made by or for a partnership of which he is a member shall be prima facie evidence that such partner is authorized to sign such return, statement, or other document.

(c) *Certain partnership elections*—(1) *In general.* For rules regarding the authority of a partner to sign a partnership return filed solely for the purpose of making certain partnership level elections, see § 1.6031(a)–1(b)(5)(ii).

(2) *Effective date.* Paragraph (c) of this section applies to taxable years of a

partnership beginning after December 31, 1999.

[T.D. 6500, 25 FR 12108, Nov. 26, 1960, as amended by T.D. 8841, 64 FR 61502, Nov. 12, 1999]

§ 1.6065–1 Verification of returns.

(a) *Persons signing returns.* If a return, declaration, statement, or other document made under the provisions of subtitle A or F of the Code, or the regulation thereunder, with respect to any tax imposed by subtitle A of the Code is required by the regulations contained in this chapter, or the form and instructions, issued with respect to such return, declaration, statement, or other document, to contain or be verified by a written declaration that it is made under the penalties of perjury, such return, declaration, statement, or other document shall be so verified by the person signing it.

(b) *Persons preparing returns*—(1) *In general.* Except as provided in subparagraph (2) of this paragraph, if a return, declaration, statement, or other document is prepared for a taxpayer by another person for compensation or as an incident to the performance of other services for which such person receives compensation, and the return, declaration, statement, or other document requires that it shall contain or be verified by a written declaration that it is prepared under the penalties of perjury, the preparer must so verify the return, declaration, statement, or other document. A person who renders mere mechanical assistance in the preparation of a return, declaration, statement, or other document as, for example, a stenographer or typist, is not considered as preparing the return, declaration, statement, or other document.

(2) *Exception.* The verification required by subparagraph (1) of this paragraph is not required on returns, declarations, statements, or other documents which are prepared:

(i) For an employee either by his employer or by an employee designated for such purpose by the employer, or

(ii) For an employer as a usual incident of the employment of one regularly or continuously employed by such employer.

TIME FOR FILING RETURNS AND OTHER DOCUMENTS

§ 1.6071–1 Time for filing returns and other documents.

(a) *In general.* Whenever a return, statement, or other document is required to be made under the provisions of subtitle A or F of the Code, or the regulations thereunder, with respect to any tax imposed by subtitle A of the Code, and the time for filing such return, statement, or other document is not provided for by the Code, it shall be filed at the time prescribed by the regulations contained in this chapter with respect to such return, statement, or other document.

(b) *Return for a short period.* In the case of a return with respect to tax under subtitle A of the Code for a short period (as defined in section 443), the district director or director of the Internal Revenue Service Center may, upon a showing by the taxpayer of unusual circumstances, prescribe a time for filing the return for such period later than the time when such return would otherwise be due. However, the district director or director of the Internal Revenue Service Center may not extend the time when the return for a DISC (as defined in section 992(a)(1)) must be filed, as specified in section 6072(b).

(c) *Time for filing certain information returns.* (1) For provisions relating to the time for filing returns of partnership income, see paragraph (e)(2) of § 1.6031–1.

(2) For provisions relating to the time for filing information returns by banks with respect to common trust funds, see § 1.6032–1.

(3) For provisions relating to the time for filing information returns by certain organizations exempt from taxation under section 501(a), see paragraph (e) of § 1.6033–1.

(4) For provisions relating to the time for filing returns by trusts claiming charitable deductions under section 642(c), see paragraph (c) of § 1.6034–1.

(5) For provisions relating to the time for filing information returns by officers, directors, and shareholders of foreign personal holding companies, see §§ 1.6035–1 and 1.6035–2.

(6) For provisions relating to the time for filing information returns with respect to certain stock option transactions, see paragraph (c) of § 1.6039–1.

(7) For provisions relating to the time for filing information returns by persons making certain payments, see § 1.6041–2(a)(3) and § 1.6041–6.

(8) For provisions relating to the time for filing information returns regarding payments of dividends, see § 1.6042–2(c).

(9) For provisions relating to the time for filing information returns by corporations with respect to contemplated dissolution or liquidations, see paragraph (a) of § 1.6043–1.

(10) For provisions relating to the time for filing information returns by corporations with respect to distributions in liquidation, see paragraph (a) of § 1.6043–2.

(11) For provisions relating to the time for filing information returns with respect to payments of patronage dividends, see § 1.6044–2(d).

(12) For provisions relating to the time for filing information returns with respect to formation or reorganization of foreign corporations, see § 1.6046–1.

(13) For provisions relating to the time for filing information returns regarding certain payments of interest, see § 1.6049–4(g).

(14) For provisions relating to the time for filing information returns with respect to payment of wages in the form of group-term life insurance, see paragraph (b) of § 1.6052–1.

(15) For provisions relating to the time for filing the annual information return on Form 1042–S of the tax withheld under chapter 3 of the Code (relating to withholding of tax nonresident aliens and foreign corporations and tax-free covenant bonds), see § 1.1461–1(c).

(16) For provisions relating to the time for filing the annual information return on Form 1042S of the tax withheld under chapter 3 of the Code (relating to withholding of tax on nonresident aliens and foreign corporations and tax-free covenant bonds), see paragraph (c) of § 1.1461–2.

[T.D. 6500, 25 FR 12108, Nov. 26, 1960, as amended by T.D. 6887, 31 FR 8814, June 24, 1966; T.D. 6908, 31 FR 16775, Dec. 31, 1966; T.D. 7284, 38 FR 20829, Aug. 3, 1973; T.D. 7533, 43 FR 6604, Feb. 15, 1978; T.D. 8734, 62 FR 53492, Oct. 14, 1997]

§ 1.6072–1 Time for filing returns of individuals, estates, and trusts.

(a) *In general*. Except as provided in paragraphs (b) and (c) of this section, returns of income required under sections 6012, 6013, 6014, and 6017 of individuals, estates, domestic trusts, and foreign trusts having an office or place of business in the United States (including unrelated business tax returns of such trusts referred to in section 511(b)(2)) shall be filed on or before the fifteenth day of the fourth month following the close of the taxable year.

(b) *Decedents*. In the case of a final return of a decedent for a fractional part of a year, the due date of such return shall be the fifteenth day of the fourth month following the close of the 12-month period which began with the first day of such fractional part of the year.

(c) *Nonresident alien individuals and foreign trusts*. The income tax return of a nonresident alien individual (other than one treated as a resident under section 6013 (g) or (h)) and of a foreign trust which does not have an office or place of business in the United States (including unrelated business tax returns of such trusts referred to in section 511(b)(2)0 shall be filed on or before the fifteenth day of the sixth month following the close of the taxable year. However, a nonresident alien individual who for the taxable year has wages subject to withholding under chapter 24 of the Code shall file his income tax return on or before the fifteenth day of the fourth month following the close of the taxable year.

(d) *Last day for filing return*. For provisions relating to the time for filing a return where the last day for filing falls on Saturday, Sunday, or a legal holiday, see section 7503 and § 301.7503–

1 of this chapter (Regulations on Procedure and Administration).

[T.D. 6500, 25 FR 12108, Nov. 26, 1960, as amended by T.D. 7426, 41 FR 33263, Aug. 9, 1976; T.D. 7670, 45 FR 6931, Jan. 31, 1980]

§ 1.6072–2 Time for filing returns of corporations.

(a) *Domestic and certain foreign corporations.* The income tax return required under section 6012 of a domestic corporation or of a foreign corporation having an office or place of business in the United States shall be filed on or before the fifteenth day of the third month following the close of the taxable year.

(b) *Foreign corporations not having an office or place of business in the United States.* The income tax return of a foreign corporation which does not have an office or place of business in the United States shall be filed on or before the fifteenth day of the sixth month following the close of the taxable year.

(c) *Exempt organizations.* For taxable years beginning after November 10, 1978, the income tax return required under section 6012 and § 1.6012–2(e) of an organization exempt from taxation under section 501(a) (other than an employee's trust under section 401(a)) shall be filed on or before the fifteenth day of the fifth month following the close of the organization's taxable year.

(d) *Cooperative organizations.* The income tax return of the following cooperative organizations shall be filed on or before the fifteenth day of the ninth month following the close of the taxable year:

(1) A farmers', fruit growers', or like association, organized and operated in compliance with the requirements of section 521 and § 1.521–1; and

(2) For a taxable year beginning after December 31, 1962, a corporation described in section 1381(a)(2), which is under a valid enforceable written obligation to pay patronage dividends (as defined in section 1388(a) and paragraph (a) of § 1.1388–1) in an amount equal to at least 50 percent of its net earnings from business done with or for its patrons, or which paid patronage dividends in such an amount out of the net earnings from business done with or for patrons during the most recent taxable year for which it had such net earnings. Net earnings for this purpose shall not be reduced by any taxes imposed by Subtitle A of the Code and shall not be reduced by dividends paid on capital stock or other proprietary interest.

(e) *DISC's and former DISC's.* The return required under section 6011(c)(2) of a corporation which is a DISC (as defined in section 992(a) shall be filed on or before the 15th day of the 9th month following the close of the taxable year. For the rule that a DISC may not have an extension of time in which to file such return, see §§ 1.6071–1(b), 1.6081–1(a), and 1.6081–3(e). The return required under § 1.6011–2(b)(1) by a former DISC shall be filed at the time it is required to file its income tax return.

(f) *Cross references.* For provisions relating to the time for filing a return where the last day for filing falls on Saturday, Sunday, or a legal holiday, see section 7503 and § 301.7503–1 of this chapter (Regulations on Procedure and Administration). For provisions relating to the fixing of a later time for filing in the case of a return for a short period, see paragraph (b) of § 1.6071–1. For provisions relating to time for filing consolidated returns and separate returns for short periods not included in consolidated returns, see §§ 1.1502–75 and 1.1502–76.

[T.D. 6500, 25 FR 12133, Nov. 26, 1960, as amended by T.D. 6643, 28 FR 3163, Apr. 2, 1963; T.D. 7244, 37 FR 28897, Dec. 30, 1972; T.D. 7533, 43 FR 6604, Feb. 15, 1978; T.D. 7896, 48 FR 23818, May 27, 1983]

§ 1.6072–3 Income tax due dates postponed in case of China Trade Act corporations.

(a) With respect to a taxable year beginning after December 31, 1948, and ending before October 1, 1956, the income tax return of any corporation organized under the China Trade Act of 1922 (15 U.S.C. ch. 4), as amended, shall not become due until December 31, 1956, provided that during any such taxable year conditions in China have been generally so unsettled as to militate against the normal commercial operations and corporate activities of such corporation. However, the postponement of the due date shall not

apply to an income tax return for any such taxable year if:

(1) The books of account and business records are available so as to permit the filing of a proper return, and the corporation has otherwise been in a position to carry on its commercial operations and corporate activities and to make a proper distribution of its earnings or profits, if any, so as to permit the certification required by section 941(b); or

(2) All the commercial operations and corporate activities of such corporation have been carried on in Hong Kong, Macao, or Taiwan (Formosa).

(b) Notwithstanding the provisions of paragraph (a) (1) or (2) of this section, the postponed due date referred to in this section will apply if a corporation satisfies the Commissioner that special circumstances exist, related to the unsettled conditions in China, which warrant such postponement.

(c) The postponed due date provided for in this section is expressly subject to the power of the Commissioner to extend, as in other cases, the time for filing the income tax return. See section 6081 and the regulations thereunder.

§ 1.6072–4 Time for filing other returns of income.

(a) *Reports for recovery of excessive profits on Government contracts.* For the time for filing annual reports by persons completing Government contracts, see 26 CFR (1939) 17.16 (Treasury Decision 4906, approved June 23, 1939), and 26 CFR (1939) 16.15 (Treasury Decision 4909, approved June 28, 1939), as made applicable to section 1471 of the Internal Revenue Code of 1954 by Treasury Decision 6091, approved August 16, 1954 (19 FR 5167, C.B. 1954–2, 47).

(b) *Returns of tax on transfers to avoid income tax.* For the time for filing returns of tax under Chapter 5 of the Code, see § 1.1494–1.

[T.D. 6908, 31 FR 16775, Dec. 31, 1966]

§ 1.6073–1 Time and place for filing declarations of estimated income tax by individuals.

(a) *Individuals other than farmers or fishermen.* Declarations of estimated tax for the calendar year shall be made on or before April 15th of such calendar year by every individual whose anticipated income for the year meets the requirements of section 6015(a). If, however, the requirements necessitating the filing of the declaration are first met, in the case of an individual on the calendar year basis, after April 1st, but before June 2d of the calendar year, the declaration must be filed on or before June 15th; if such requirements are first met after June 1st and before September 2d, the declaration must be filed on or before September 15th; and if such requirements are first met after September 1st, the declaration must be filed on or before January 15th of the succeeding calendar year. In the case of an individual on the fiscal year basis, see § 1.6073–2. A special rule applies to nonresident aliens who do not have wages subject to withholding under Chapter 24 of the code and are not treated as residents under section 6013 (g) or (h) of the code. For taxable years beginning after December 31, 1976, these aliens are not required to file a declaration of estimated tax before June 15th.

(b) *Farmers or fishermen*—(1) *In general.* In the case of an individual on a calendar year basis:

(i) If at least two-thirds of the individual's total estimated gross income from all sources for the calendar year is from farming or fishing (including oyster farming), or

(ii) If at least two-thirds of the individual's total gross income from all sources shown on the return for the preceding taxable year was from farming or fishing (including oyster farming) (with respect to declarations of estimated tax for taxable years beginning after November 10, 1978),

He may file a declaration of estimated tax on or before the 15th day of January of the succeeeding calendar year in lieu of the time prescribed in paragraph (a) of this section. For the filing of a return in lieu of a declaration, see paragraph (a) of § 1.6015–1.

(2) *Farmers.* The estimated gross income from farming is the estimated income resulting from oyster farming, the cultivation of the soil, the raising or harvesting of any agricultural or horticultural commodities, and the raising of livestock, bees, or poultry. In other words, the requisite gross income

must be derived from the operations of a stock, dairy, poultry, fruit, or truck farm, or plantation, ranch, nursery, range, orchard, or oyster bed. If an individual receives for the use of his land income in the form of a share of the crops produced thereon such income is from farming. As to determination of income of farmers, see sections 61 and 162 and the regulations thereunder.

(3) *Fishermen*. The estimated gross income from fishing is the estimated income resulting from the catching, taking, harvesting, cultivating or farming of any kind of fish, shellfish (for example, clams and mussels), crustacea (for example, lobsters, crabs, and shrimps), sponges, seaweeds, or other aquatic forms of animal and vegetable life. The estimated gross income from fishing includes the income expected to be received by an officer or member of the crew of a vessel while the vessel is engaged in any such activity, whether or not the officer or member of the crew is himself so engaged, and, in the case of an individual who is engaged in any such activity in the employ of any person, the income expected to be received by such individual from such employment. In addition, income expected to be received for services performed as an ordinary incident to any such activity is estimated gross income from fishing. Similarly, for example, the estimated gross income from fishing includes income expected to be received from the shore services of an officer or member of the crew of a vessel engaged in any such activity, if such services are an ordinary incident to any such activity. Services performed as an ordinary incident to such activities include, for example, services performed in such cleaning, icing, and packing of fish as are necessary for the immediate preservation of the catch.

(c) *Nonresident aliens*. Notwithstanding the provisions of paragraph (a) of this section, for taxable years beginning after December 31, 1976, in the case of a nonresident alien described in section 6072(c) (relating to returns of nonresident aliens whose wages are not subject to withholding) whose estimated gross income for the calendar year meets the requirements of section 6015(a), a declaration of estimated tax for the calendar year need not be made before June 15th of such calendar year.

(d) *Place for filing declaration*. Except as provided in paragraph (b) of § 301.6091–1 (relating to hand-carried documents), the declaration of estimated tax shall be filed at the place prescribed by the instructions applicable to such declaration. For example, if the instructions applicable to a declaration provide that the declaration of a taxpayer located in North Carolina be filed with the Director, Internal Revenue Service Center, Chamblee, Ga., such declaration shall be filed with the service center.

(e) *Amendment of declaration*. An amended declaration of estimated tax may be filed during any interval between installment dates prescribed for the taxable year. However, no amended declaration may be filed until after the installment date on or before which the original declaration was filed and only one amended declaration may be filed during each interval between installment dates. Except as provided in paragraph (b) of § 301.6091–1 (relating to hand-carried documents), an amended declaration shall be filed with the internal revenue officer with whom the original declaration was filed.

[T.D. 6678, 28 FR 10516, Oct. 1, 1963, as amended by T.D. 6950, 33 FR 5355, Apr. 4, 1968; T.D. 7670, 45 FR 6931, Jan. 31, 1980; T.D. 7719, 45 FR 60902, Sept. 15, 1980]

§ 1.6073–2 Fiscal years.

(a) *Individuals other than farmers or fishermen*. In the case of an individual on the fiscal year basis, the declaration must be filed on or before the 15th day of the 4th month of the taxable year. If, however, the requirements of section 6015(a) are first met after the 1st day of the 4th month and before the 2d day of the 6th month, the declaration must be filed on or before the 15th day of the 6th month of the taxable year. If such requirements are first met after the 1st day of the 6th month, and before the 2d day of the 9th month, the declaration must be filed on or before the 15th day of the 9th month of the taxable year. If such requirements are first met after the 1st day of the 9th month, the declaration must be filed on or before the 15th day of the 1st month of the succeeding fiscal year.

Thus, if an individual taxpayer has a fiscal year ending on June 30, 1956, his declaration must be filed on or before October 15, 1955, if the requirements of section 6015(a) are met on or before October 1, 1955. If, however, such requirements are not met until after October 1, 1955, and before December 2, 1955, the declaration need not be filed until December 15, 1955.

(b) *Farmers or fishermen*. In the case of an individual on a fiscal year basis:

(1) If at least two-thirds of the individual's total estimated gross income from all sources for the fiscal year is from farming or fishing (including oyster farming), or

(2) If at least two-thirds of the individual's total gross income from all sources shown on the return for the preceding taxable year was from farming or fishing (including oyster farming) (with respect to declarations of estimated tax for taxable years beginning after November 10, 1978),

he may file a declaration on or before the 15th day of the month immediately following the close of his taxable year, in lieu of the time prescribed in paragraph (a) of this section.

(c) *Nonresident aliens*. Notwithstanding the provisions of paragraph (a) of this section, in the case of a nonresident alien described in section 6072(c) (relating to returns of nonresident aliens whose wages are not subject to withholding) whose anticipated income for the fiscal year meets the requirements of section 6015(a), § 1.6015(a)–1, and § 1.6015(i)–1, the declaration of estimated tax for the fiscal year need not be filed before the 15th day of the 6th month of such fiscal year.

[T.D. 6678, 28 FR 10516, Oct. 1, 1963, as amended by T.D. 7719, 45 FR 60903, Sept. 15, 1980]

§ 1.6073–3 Short taxable years.

(a) *Individuals other than farmers or fishermen*. In the case of short taxable years the declaration shall be filed on or before the 15th day of the 4th month of such taxable year if the requirements of section 6015(a) are met on or before the 1st day of the 4th month of such year. If such requirements are first met after the 1st day of the 4th month but before the 2d day of the 6th month, the declaration must be filed on or before the 15th day of the 6th month. If such requirements are first met after the 1st day of the 6th month but before the 2d day of the 9th month, the declaration must be filed on or before the 15th day of the 9th month. If, however, the period for which the declaration is filed is one of 4 months, or one of 6 months and the requirements of section 6015(a) are not met until after the 1st day of the 4th month, or one of 9 months and such requirements are not met until after the 1st day of the 6th month, the declaration may be filed on or before the 15th day of the succeeding taxable year.

(b) *Farmers or fishermen*. In the case of an individual:

(1) Whose current taxable year is a short taxable year and whose estimated gross income from farming or fishing (including oyster farming) is at least two-thirds of his total estimated gross income from all sources for such current taxable year, or

(2) Whose taxable year preceding the current taxable year was a short taxable year and whose gross income from farming or fishing (including oyster farming) was at least two-thirds of the total gross income from all sources shown on the return for such preceding short taxable year (with respect to declarations of estimated tax for taxable years beginning after November 10, 1978),

he may file a declaration of estimated tax on or before the 15th day of the month immediately following the close of the current taxable year, in lieu of the time prescribed in paragraph (a) of this section.

(c) *Nonresident aliens*. Notwithstanding the provisions of paragraph (a) of this section, in the case of a short taxable year, a nonresident alien described in section 6072(c) (relating to returns of nonresident aliens whose wages are not subject to withholding) whose anticipated income for the short taxable year meets the requirements of section 6015(a). Sections 1.6015(a)–1, 1.6015(g)–1, and 1.6015(i)–1 on or before the 1st day of the 6th month following the beginning of such year need not file a declaration of estimated tax before

the 15th day of the 6th month following the beginning of such year.

[T.D. 6678, 28 FR 10516, Oct. 1, 1963, as amended by T.D. 7719, 45 FR 60903, Sept. 15, 1980]

§ 1.6073–4 Extension of time for filing declarations by individuals.

(a) *In general.* District directors and directors of service centers are authorized to grant a reasonable extension of time for filing a declaration or an amended declaration. Except as provided in paragraph (b) of § 301.6091–1 (relating to hand-carried documents), an application for an extension of time for filing such a declaration shall be addressed to the internal revenue officer with whom the taxpayer is required to file his declaration, and must contain a full recital of the causes for the delay. Except in the case of taxpayers who are abroad, no extension for filing declarations may be granted for more than 6 months.

(b) *Citizens outside of the United States.* In the case of a United States citizen outside the United States and Puerto Rico on the 15th day of the 4th month of his taxable year, an extension of time for filing his declaration of estimated tax otherwise due on or before the 15th day of the 4th month of the taxable year is granted to and including the 15th day of the 6th month of the taxable year. For purposes of applying this paragraph to taxable years beginning prior to January 1, 1964, Alaska shall be considered outside the United States.

(c) *Residents outside the United States.* In the case of a U.S. resident living or traveling outside the United States and Puerto Rico on the 15th day of the 4th month of a taxable year beginning after December 31, 1978, an extension of time for filing the declaration of estimated tax otherwise due on or before the 15th day of the 4th month of the taxable year is granted to and including the 15th day of the 6th month of the taxable year.

(d) *Addition to tax applicable.* An extension of time for filing the declaration of estimated tax automatically extends the time for paying the estimated tax (without interest) for the same period. However, such extension does not relieve the taxpayer from the addition to the tax imposed by section 6654, and the period of the underpayment will be determined under section 6654(c) without regard to such extension.

[T.D. 6500, 25 FR 12008, Nov. 26, 1960, as amended by T.D. 6638, 28 FR 1765, Feb. 26, 1963; T.D. 6950, 33 FR 5355, Apr. 4, 1968; T.D. 7736, 45 FR 76143, Nov. 18, 1980]

§ 1.6074–1 Time and place for filing declarations of estimated income tax by corporations.

(a) *Taxable years beginning on or before December 31, 1963.* For taxable years ending on or after December 31, 1955, and beginning on or before December 31, 1963, declarations of estimated tax for the taxable year shall be filed on or before the 15th day of the 9th month of such year by every corporation whose then anticipated income tax liability under section 11 or 1201(a), or subchapter L, chapter 1 of the Code, for the year meets the requirements of section 6016(a). If, however, the requirements necessitating the filing of a declaration are first met after the last day of the 8th month and before the first day of the 12th month of the taxable year the declaration shall be filed on or before the 15th day of the 12th month of the taxable year. If, however, the requirements of section 6016(a) are not met before the first day of the 12th month of the taxable year, no declaration need be filed for such year.

(b) *Taxable years beginning after December 31, 1963.* A declaration of estimated tax for a taxable year beginning after December 31, 1963, required of a corporation by section 6016 shall be filed as follows:

If the requirements of section 6016 are first met—	The declaration shall be filed on or before—
before the 1st day of the 4th month of the taxable year.	the 15th day of the 4th month of the taxable year
after the last day of the 3d month and before the 1st day of the 6th month of the taxable year.	the 15th day of the 67th month of the taxable year
after the last day of the 5th month and before the 1st day of the 9th month of the taxable year.	the 15th day of the 9th month of the taxable year
after the last day of the 8th month and before the 1st day of the 12th month of the taxable year.	the 15th day of the 12th month of the taxable year

(c) *Place for filing declaration.* Except as provided in paragraph (b) of § 301.6091–1 (relating to hand-carried

documents), the declaration of estimated tax shall be filed at the place prescribed by the instructions applicable to such declaration. For example, if the instructions applicable to a declaration provide that the declaration of a corporation located in North Carolina be filed with the Director, Internal Revenue Service Center, Chamblee, Ga., such declaration shall be filed with the service center.

(d) *Amendment of declaration*—(1) *Taxable years beginning on or before December 31, 1963.* A declaration of estimated tax for a taxable year beginning on or before December 31, 1963, which is filed by a corporation prior to the 15th day of the 12th month of the taxable year may be amended in the manner prescribed in § 1.6016–3, at any time on or before such 15th day. An amended declaration shall be filed with the internal revenue officer with whom the original declaration was filed.

(2) *Taxable years beginning after December 31, 1963.* In any case where a declaration of estimated tax for a taxable year beginning after December 31, 1963, has been filed, an amended declaration of estimated tax may be filed during any interval between installment dates prescribed for the taxable year. However, no amended declaration may be filed until after the installment date on or before which the original declaration was filed and only one amended declaration may be filed during each interval between installment dates. See § 1.6016–3 for the manner of making an amended declaration. Except as provided in paragraph (b) of § 301.6091–1 (relating to hand-carried documents), an amended declaration shall be filed with the internal revenue officer with whom the original declaration was filed.

[T.D. 6768, 29 FR 14922, Nov. 4, 1964, as amended by T.D. 6950, 33 FR 5355, Apr. 4, 1968]

§ 1.6074–2 Time for filing declarations by corporations in case of a short taxable year.

(a) *Taxable years beginning on or before December 31, 1963*—(1) *In general.* In the case of a short taxable year of 9 months or more beginning on or before December 31, 1963, where the requirements of section 6016(a) are met before the 1st day of the 9th month of the short taxable year, the declaration shall be filed on or before the 15th day of the 9th month of such short year. In the case of a short taxable year of more than 9 months, where the requirements of section 6016(a) are first met after the last day of the 8th month, but before the 1st day of the last month of the short taxable year, the declaration shall be filed on or before the 15th day of the last month of such short year. See § 1.6016–4, relating to the requirement of a declaration in the case of a short taxable year, and paragraph (a) of § 1.6154–2, relating to the time for payment of the estimated tax in case of a short taxable year.

(2) *Example.* The application of the provisions of this paragraph may be illustrated by the following example:

Example. A corporation which changes from a calendar year basis to a fiscal year basis beginning November 1, 1960, will have a short taxable year beginning January 1, 1960, and ending October 31, 1960. If the requirements of section 6016(a) are met before September 1, 1960 (the 1st day of the 9th month), the corporation is required to file its declaration on or before September 15, 1960 (the 15th day of the 9th month). However, if the requirements of section 6016(a) are first met after August 31, 1960 (the last day of the 8th month), but before October 1, 1960 (the 1st day of the last month of the short year), the corporation is required to file its declaration on or before October 15, 1960 (the 15th day of the last month of the short year).

(b) *Taxable years beginning after December 31, 1963*—(1) *In general.* In the case of a short taxable year of 4 or more months which begins after December 31, 1963, the declaration shall be filed on or before the applicable date specified in paragraph (b) of § 1.6074–1, except that in the case of a short taxable year ending after November 30, 1964, the declaration shall be filed on or before the 15th day of the last month of the short taxable year if the requirements of section 6016(a) are first met before the first day of such last month and the date specified in such paragraph (b) as applicable is not within the short taxable year. See § 1.6016–4, relating to the requirement of a declaration in the case of a short taxable year, and paragraph (b) of § 1.6154–2, relating to the time for payment of the estimated tax in case of a short taxable year.

(2) *Examples.* The application of the provisions of this paragraph may be illustrated by the following examples:

Example (1). A corporation filing on a calendar year basis which changes to a fiscal year beginning September 1, 1965, will have a short taxable year beginning January 1, 1965, and ending August 31, 1965. If the requirements of section 6016(a) are met before April 1, 1965 (the 1st day of the 4th month), the declaration of estimated tax must be filed on or before April 15, 1965 (the 15th day of the 4th month).

Example (2). If, in the first example, the corporation first meets the requirements of section 6016(a) during July 1965, then the requirements of section 6016(a) were met before the first day of the last month of the short taxable year, and a declaration of estimated tax is required to be filed on or before August 15, 1965, for the short taxable year. However, if the corporation does not meet the requirements of section 6016(a) until August 1, 1965, then the requirements of section 6016(a) were not met before the first day of the last month of the short taxable year, and no declaration of estimated tax is required to be filed for the short taxable year.

(c) *Amendment of declaration*—(1) *Taxable years beginning on or before December 31, 1963.* Where a declaration of estimated tax for a short taxable year of more than 9 months beginning on or before December 31, 1963, is filed before the 15th day of the last month of the short taxable year, an amended declaration may be filed any time on or before such 15th day.

(2) *Taxable years beginning after December 31, 1963.* Where a declaration of estimated tax for a short taxable year beginning after December 31, 1963, has been filed, an amended declaration may be filed during any interval between installment dates. However, no amended declaration for a short taxable year may be filed until after the installment date on or before which the original declaration was filed and only one amended declaration may be filed during each interval between installment dates. For purposes of this subparagraph the term ''installment date'' includes the 15th day of the last month of a short taxable year if such 15th day does not fall on a prescribed installment date.

[T.D. 6768, 29 FR 14923, Nov. 4, 1964]

§ 1.6074–3 Extension of time for filing declarations by corporations.

(a) *In general.* District directors and directors of service centers are authorized to grant a reasonable extension of time for filing a declaration or an amended declaration. Except as provided in paragraph (b) of § 301.6091–1 (relating to hand-carried documents), an application by a corporation for an extension of time for filing such a declaration shall be addressed to the internal revenue officer with whom the corporation is required to file its declaration and must contain a full recital of the causes for the delay.

(b) *Addition to tax applicable.* An extension of time granted to a corporation for filing a declaration of estimated tax automatically extends the time for paying the estimated tax (without interest) for the same period. However, such extension does not relieve the corporation from the addition to the tax imposed by section 6655, and the period of the underpayment will be determined under section 6655(c) without regard to such extension.

[T.D. 6500, 25 FR 12108, Nov. 26, 1960, as amended by T.D. 6950, 33 FR 5355, Apr. 4, 1968]

EXTENSION OF TIME FOR FILING RETURNS

§ 1.6081–1 Extension of time for filing returns.

(a) *In general.* District directors and directors of service centers are authorized to grant a reasonable extension of time for filing any return, declaration, statement, or other document which relates to any tax imposed by subtitle A of the code and which is required under the provisions of subtitle A or F of the code or the regulations thereunder. However, other than in the case of taxpayers who are abroad, such extensions of time shall not be granted for more than 6 months, and an extension of time for the filing of a return of a DISC (as defined in section 992(a)), as specified in section 6072(b), shall not be granted. Except in the case of an extension of time pursuant to § 1.6081–2, an extension of time for filing an income-tax return shall not operate to extend the time for the payment of the tax or any installment thereof unless specified to the contrary in the extension.

In the case of an extension of time pursuant to § 1.6081–2, an extension of time for filing an income-tax return shall operate to extend the time for the payment of the tax or any installment thereof unless specified to the contrary in the extension. For rules relating to extension of time for paying tax, see § 1.6161–1.

(b) *Application for extension of time*—(1) *In general.* A taxpayer desiring an extension of the time for filing a return, statement, or other document shall submit an application therefor on or before the due date of such return, statement, or other document. Except as provided in subparagraph (3) of this paragraph and, except as provided in paragraph (b) of § 301.6091–1 (relating to hand-carried documents), such application shall be made to the internal revenue officer with whom such return, statement, or other document is required to be filed. Such application shall be in writing, properly signed by the taxpayer or his duly authorized agent, and shall clearly set forth (i) the particular tax return, information return, statement, or other document, including the taxable year or period thereof, with respect to which the extension of the time for filing is desired, and (ii) a full recital of the reasons for requesting the extension to aid such internal revenue officer in determining the period of extension, if any, which will be granted. In the case of a cemetery perpetual care fund trust, a distributee cemetery's failure to make timely expenditures of distributions which prevents accurate determination of the allowable deduction under section 642(i) will be considered reasonable grounds for a 6-month extension of time for filing the trust's return. See § 1.642(i)–1(c)(2).

(2) *Additional information in the case of Form 1040.* In addition to the information required under subparagraph (1) of this paragraph, the application of a taxpayer desiring an extension of the time for filing an individual income tax return on Form 1040 for any taxable year beginning after December 31, 1958, shall also set forth (i) whether an income tax return has been filed on or before its due date for each of the three taxable years immediately preceding the taxable year of such return, and if not, the reason for each failure, and (ii) whether the taxpayer was required to file a declaration of estimated tax for the taxable year of such return, and if so, whether each required estimated tax payment was made on or before its due date. For purposes of this subparagraph a return is considered as filed on or before its due date if it is filed on or before the applicable date provided in section 6072 or on or before the last day of the period covered by an extension of time granted pursuant to the provisions of section 6081, and each required payment of estimated tax is considered as paid on or before its due date if it is paid on or before the applicable date provided in section 6153 on or before the last day of the period covered by an extension of time granted pursuant to the provisions of section 6161.

(3) *Information returns filed with Service Center.* An application for an extension of the time for filing any information return required to be filed with an Internal Revenue Service Center shall state the location of the Service Center with which such return will be filed. Except as provided in paragraph (b) of § 301.6091–1 (relating to hand-carried documents), such application shall be made to the internal revenue officer with whom the applicant is required to file an income tax return or with whom the applicant would be required to file an income tax return if such a return were required of him.

(4) *Taxpayer unable to sign.* In any case in which a taxpayer is unable, by reason of illness, absence, or other good cause, to sign a request for an extension, any person standing in close personal or business relationship to the taxpayer may sign the request on his behalf, and shall be considered as a duly authorized agent for this purpose, provided the request sets forth the reasons for a signature other than the taxpayer's and the relationship existing between the taxpayer and the signer.

(5) *Form of application.* The application for an extension of the time for filing a return, statement, or other document may be made in the form of a letter. However, in the case of an individual income tax return on Form 1040, the application for an extension of the

time for filing may be made either on Form 2688 or in the form of a letter.

[T.D. 6500, 25 FR 12108, Nov. 26, 1960, as amended by T.D. 6581, 26 FR 11678, Dec. 6, 1961; T.D. 6950, 33 FR 5355, Apr. 4, 1968; T.D. 7260, 38 FR 4258, Feb. 12, 1973; T.D. 7533, 43 FR 6604, Feb. 15, 1978; T.D. 7651, 44 FR 61597, Oct. 26, 1979; T.D. 8241, 54 FR 7762, Feb. 23, 1989]

§ 1.6081–1T Extension of time to file return in case of taxpayers with mixed straddles (temporary).

The due date for the income tax return of trusts, estates, partnerships, and individual taxpayers filing their return for calendar year 1984 or for a fiscal year ending before February 1, 1985, shall be October 15, 1985, if—

(a) The taxpayer obtained an extension of time to file the return pursuant to § 1.6081–1 or § 1.6081–4, and the due date for the return (taking the extension into account) falls after August 7, 1985 and before October 16, 1985;

(b) The taxpayer did not file the return prior to August 8, 1985; and

(c) The taxpayer held one or more mixed straddles (within the meaning of section 1092(b)(2)) at any time after December 31, 1983, and before August 8, 1985.

[T.D. 8058, 50 FR 42014, Oct. 17, 1985]

§ 1.6081–2 Automatic extension of time to file partnership return of income.

(a) *In general.* A partnership required to file a return of income on Form 1065, U.S. Partnership Return of Income, for any taxable year will be allowed an automatic 3-month extension of time to file the return after the date prescribed for filing the return if an application under this section is filed in accordance with paragraph (b) of this section. In the case of a partnership described in § 1.6081–5(a)(1), the automatic extension allowed under this section runs concurrently with an extension of time to file granted pursuant to § 1.6081–5(a).

(b) *Requirements.* In order to satisfy this paragraph (b), an application for an automatic extension under this section must be—

(1) Submitted on Form 8736, Application for Automatic Extension of Time To File U.S. Return for a Partnership, REMIC or for Certain Trusts, or in any other manner as may be prescribed by the Commissioner;

(2) Filed on or before the later of—

(i) The date prescribed for filing the partnership return (without regard to any extensions of the time for filing such return); or

(ii) The expiration of any extension of time to file granted such partnership pursuant to § 1.6081–5(a); and

(3) Filed with the Internal Revenue Service office designated in the application's instructions.

(c) *Payment of section 7519 amount.* An automatic extension of time for filing a partnership return under this section does not extend the time for payment of any amount due under section 7519, relating to required payments for entities electing not to have a required taxable year.

(d) *Section 444 election.* An automatic extension of time for filing a partnership return will run concurrently with any extension of time for filing a return allowed because of section 444, relating to the election of a taxable year other than a required taxable year.

(e) *Effect of extension on partner.* An automatic extension of time for filing a partnership return under this section does not operate to extend the time for filing a partner's income tax return or the time for the payment of any tax due on the partner's income tax return.

(f) *Termination of automatic extension.* The district director, including the Assistant Commissioner (International), or the director of a service center may terminate at any time an automatic extension by mailing to the partnership a notice of termination. The notice must be mailed at least 10 days prior to the termination date designated in such notice. The notice of termination must be mailed to the address shown on Form 8736 or to the partnerships's last known address. For further guidance regarding the definition of last known address, see § 301.6212–2 of this chapter.

(g) *Penalties.* See section 6698 for failure to file a partnership return.

(h) *Coordination with § 1.6081–1.* Except in undue hardship cases, no extension of time for filing a partnership return of income will be granted under § 1.6081–1 until an automatic extension

has been allowed pursuant to the provisions of this section.

(i) *Effective date.* This section is effective for applications for an automatic extension of time to file a partnership return of income filed on or after December 31, 1996.

[T.D. 8703, 61 FR 69029, Dec. 31, 1996, as amended by T.D. 8939, 66 FR 2819, Jan. 12, 2001]

§ 1.6081–3 Automatic extension of time for filing corporation income tax returns.

(a) *In general.* A corporation shall be allowed an automatic extension of time to the fifteenth day of the sixth month (third month in the case of taxable years ending before December 31, 1982) following the month in which falls the date prescribed for the filing of its income tax return provided the following requirements are met:

(1) An application must be signed by a person authorized by the corporation to request such extension. Such person must be a person authorized under section 6062 to execute the return of the corporation; a person currently enrolled to practice before the Treasury Department; or after November 7, 1965, either an attorney who is a member in good standing of the bar of the highest court of a State, possession, territory, commonwealth, or the District of Columbia, or a certified public accountant duly qualified to practice in a State, possession, territory, commonwealth, or the District of Columbia.

(2) The application must be filed on or before the date prescribed for the filing of the return of the corporation with the internal revenue officer with whom the corporation is required to file its income tax return.

(3) The corporation shall make a remittance, on or before the date prescribed for payment, of the amount of the properly estimated unpaid tax liability. For taxable years beginning before 1983, the corporation shall make a remittance of an estimated amount of tax which shall not be less than would be required as the first installment under section 6152(a)(1) should the corporation elect to pay the tax in installments.

Upon the timely filing of Form 7004, properly prepared, the 6-month (3-month in the case of taxable years ending before December 31, 1982) extension shall be considered as allowed. For taxable years beginning before 1983, if the taxpayer elects to pay in installments the tax shown on Form 7004, the installment privilege provided in section 6152(a)(1) is limited to the amount shown on the form.

(b) *Consolidated returns.* An application for an automatic extension of time for filing a consolidated return shall be made by a person authorized by the parent corporation to request such extension. Such person must be a person authorized under section 6062 to execute the return of the parent corporation; a person currently enrolled to practice before the Treasury Department; or after November 7, 1965, either an attorney who is a member in good standing of the bar of the highest court of a State, possession, territory, commonwealth, or the District of Columbia, or a certified public accountant duly qualified to practice in a State, possession, territory, commonwealth, or the District of Columbia. There shall be attached to such application a statement listing the name and address of each member of the affiliated group for which such consolidated return will be made. For taxable years beginning after December 31, 1970, the application shall be filed with the internal revenue officer with which the parent corporation will file its income tax return. Upon the timely filing of Form 7004 with the internal revenue officer with which such corporation files its return, the 6-month (3-month in the case of taxable years ending before December 31, 1982) extension shall be considered as granted to the affiliated group for the filing of its consolidated return or for the filing of each member's separate return.

(c) *Special rule for the extension of time for the payment of tax.* Notwithstanding the application of §1.6081–1(a), any automatic extension of time for filing a corporation income tax return granted under paragraph (a) or (b) of this section shall not operate to extend the time for payment of any tax due on such return.

(d) *Termination of automatic extension.* The district director, including the Director of International Operations, or

the director of a service center may, in his discretion, terminate at any time an automatic extension by mailing to the corporation (parent corporation in the case of an affiliated group), or the person who requested such extension for the corporation, a notice of termination. The notice shall be mailed at least 10 days prior to the termination date designated in such notice. The notice of termination shall be sufficient for all purposes when mailed to the corporation at its address shown on Form 7004 or to the person who requested such extension for the corporation at his last known address or last known place of business, even if such corporation has terminated its existence, or such person is deceased or is under a legal disability. For further guidance regarding the definition of last known address, see § 301.6212–2 of this chapter.

(e) Paragraphs (a) through (d) of this section shall not apply to returns filed by a DISC pursuant to section 6011(c)(2).

[T.D. 7567, 43 FR 45582, Oct. 3, 1978, as amended by T.D. 7885, 48 FR 16484, Apr. 18, 1983; T.D. 8939, 66 FR 2819, Jan. 12, 2001]

§ 1.6081–4 Automatic extension of time for filing individual income tax returns.

(a) *In general*—(1) *Period of extension*. An individual who is required to file an individual income tax return will be allowed an automatic 4-month extension of time to file the return after the date prescribed for filing the return provided the requirements contained in paragraphs (a)(2), (3), and (4) of this section are met. In the case of an individual described in § 1.6081–5(a)(5) or (6), the automatic 4-month extension will run concurrently with the extension of time to file granted pursuant to § 1.6081–5.

(2) *Manner for submitting an application*. An application must be submitted—

(i) On Form 4868, Application for Automatic Extension of Time to File U.S. Individual Income Tax Return; or

(ii) In any other manner as may be prescribed by the Commissioner.

(3) *Time and place for filing application*. Except in the case of an individual described in § 1.6081–5(a)(5) or (6), the application must be filed on or before the date prescribed for filing the individual income tax return. In the case of an individual described in § 1.6081–5(a)(5) or (6), the application must be filed on or before the expiration of the extension of time to file granted pursuant to § 1.6081–5. The application must be filed with the Internal Revenue Service office designated in the application's instructions.

(4) *Proper estimate of tax*. An application for extension must show the full amount properly estimated as tax for the taxable year.

(5) *Coordination with § 1.6081–1*. Except in undue hardship cases, no extension of time for filing an individual income tax return will be granted under § 1.6081–1 until an automatic extension has been allowed pursuant to the provisions of this paragraph (a).

(b) *Special rule for the extension of time for the payment of tax*. Notwithstanding the application of § 1.6081–1(a), any automatic extension of time for filing an individual income tax return granted under paragraph (a) of this section shall not operate to extend the time for payment of any tax due on such return.

(c) *Termination of automatic extension*. The district director, including the Assistant Commissioner (International), or the director of a service center may terminate at any time an automatic extension by mailing to the taxpayer a notice of termination. The notice must be mailed at least 10 days prior to the termination date designated in such notice. The notice of termination must be mailed to the taxpayer at the address shown on Form 4868 or to the taxpayer's last known address. For further guidance regarding the definition of last known address, see § 301.6212–2 of this chapter.

(d) *Penalties*. See section 6651 for failure to file an individual income tax return or failure to pay the amount shown as tax on the return. In particular, see § 301.6651–1(c)(3) of this chapter (relating to a presumption of reasonable cause in certain circumstances involving an automatic extension of time for filing an individual income tax return).

(e) *Effective date.* This section is effective for applications for an automatic extension of time to file an individual income tax return filed on or after December 31, 1996.

[T.D. 7567, 43 FR 45583, Oct. 3, 1978, as amended by T.D. 7885, 48 FR 16484, Apr. 18, 1983; T.D. 8651, 61 FR 261, Jan. 4, 1996; T.D. 8703, 61 FR 69030, Dec. 31, 1996; T.D. 8939, 66 FR 2819, Jan. 12, 2001]

§ 1.6081–5 Extensions of time in the case of certain partnerships, corporations and U.S. citizens and residents.

(a) The rules in paragraphs (a) through (e) of this section apply to returns of income due after April 15, 1988. An extension of time for filing returns of income and for paying any tax shown on the return is hereby granted to and including the fifteenth day of the sixth month following the close of the taxable year in the case of:

(1) Partnerships which are required under §1.6031–1(e)(2) to file returns on the fifteenth day of the fourth month following the close of the taxable year of the partnership, and which keep their records and books of account outside the United States and Puerto Rico;

(2) Domestic corporations which transact their business and keep their records and books of account outside the United States and Puerto Rico;

(3) Foreign corporations which maintain an office or place of business within the United States;

(4) Domestic corporations whose principal income is from sources within the possessions of the United States;

(5) United States citizens or residents whose tax homes and abodes, in a real and substantial sense, are outside the United States and Puerto Rico; and

(6) United States citizens and residents in military or naval service on duty, including non-permanent or short term duty, outside the United States and Puerto Rico.

(b) In order to qualify for the extension under this section, a statement must be attached to the return showing that the person for whom the return is made is a person described in paragraph (a) of this section.

(c) For purposes of paragraph (a)(5) of this section, whether a person is a United States resident will be determined in accordance with section 7701(b) of the Code. The term ''tax home,'' as used in paragraph (a)(5), will have the same meaning which it has for purposes of section 162(a)(2) (relating to travel expenses away from home). If a person does not have a regular or principal place of business, that person's tax home will be considered to be his regular place of abode in a real and substantial sense.

(d) In order to qualify for the extension under paragraph (a)(6), the assigned tour of duty outside the United States and Puerto Rico must be for a period that includes the entire due date of the return.

(e) A person otherwise qualifying for the extension under paragraph (a)(5) or paragraph (a)(6) shall not be disqualified because he is physically present in the United States or Puerto Rico at any time, including the due date of the return.

(f) With respect to income tax returns due on April 15, 1988, an extension of time for filing a return of income and for paying any tax shown on that return is hereby granted to and including the fifteenth day of the sixth month following the close of the taxable year in the case of citizens or residents of the United States who are traveling outside the United States and Puerto Rico. A taxpayer will be considered to be traveling outside the United States and Puerto Rico only if the period of travel outside the United States and Puerto Rico is a period of at least fourteen days continuous travel that includes all of April 15, 1988. For returns due after April 15, 1988, no extension will be granted to taxpayers traveling outside the United States and Puerto Rico.

[T.D. 8312, 55 FR 37227, Sept. 10, 1990; 55 FR 41310, Oct. 10, 1990]

§ 1.6081–6 Automatic extension of time to file trust income tax return.

(a) *In general.* A trust required to file an income tax return on Form 1041, U.S. Income Tax Return for Estates and Trusts, for any taxable year will be allowed an automatic 3-month extension of time to file the return after the date prescribed for filing the return if an application under this section is

filed in accordance with paragraph (b) of this section.

(b) *Requirements*. To satisfy this paragraph (b), an application for an automatic extension under this section must—

(1) Be submitted on Form 8736, Application for Automatic Extension of Time To File U.S. Return for a Partnership, REMIC or for Certain Trusts, or in any other manner as may be prescribed by the Commissioner;

(2) Be filed on or before the date prescribed for filing the trust income tax return with the Internal Revenue Service office designated in the application's instructions; and

(3) Show the full amount properly estimated as tax for the trust for the taxable year.

(c) *Effect of extension on beneficiary*. An automatic extension of time to file a trust income tax return under this section will not operate to extend the time for filing the income tax return of a beneficiary of the trust or the time for the payment of any tax due on the beneficiary's income tax return.

(d) *Termination of automatic extension*. The district director, including the Assistant Commissioner (International), or the director of a service center may terminate at any time an automatic extension by mailing to the trust a notice of termination. The notice must be mailed at least 10 days prior to the termination date designated in such notice. The notice of termination must be mailed to the address shown on Form 8736 or to the trust's last known address. For further guidance regarding the definition of last known address, see § 301.6212–2 of this chapter.

(e) *Penalties*. See section 6651 for failure to file a trust income tax return or failure to pay the amount shown as tax on the return.

(f) *Coordination with § 1.6081–1*. Except in undue hardship cases, no extension of time for filing a trust income tax return will be granted under § 1.6081–1 until an automatic extension has been allowed pursuant to the provisions of this section.

(g) *Effective date*. This section is effective for applications for an automatic extension of time to file a trust income tax return filed on or after December 31, 1996.

[T.D. 8703, 61 FR 69030, Dec. 31, 1996, as amended by T.D. 8939, 66 FR 2819, Jan. 12, 2001]

§ 1.6081–7 Automatic extension of time to file Real Estate Mortgage Investment Conduit (REMIC) income tax return.

(a) *In general*. A Real Estate Mortgage Investment Conduit (REMIC) required to file an income tax return on Form 1066, U.S. Real Estate Mortgage Investment Conduit Income Tax Return, for any taxable year will be allowed an automatic 3-month extension of time to file the return after the date prescribed for filing the return if an application under this section is filed in accordance with paragraph (b) of this section.

(b) *Requirements*. To satisfy this paragraph (b), an application for an automatic extension under this section must—

(1) Be submitted on Form 8736, Application for Automatic Extension of Time To File U.S. Return for a Partnership, REMIC or for Certain Trusts, or in any other manner as may be prescribed by the Commissioner;

(2) Be filed on or before the date prescribed for filing the REMIC income tax return with the Internal Revenue Service office designated in the application's instructions; and

(3) Show the full amount properly estimated as tax for the REMIC for the taxable year.

(c) *Effect of extension on residual or regular interest holders*. An automatic extension of time to file a REMIC income tax return under this section will not operate to extend the time for filing the income tax return of a residual or regular interest holder of the REMIC or the time for the payment of any tax due on the residual or regular interest holder's income tax return.

(d) *Termination of automatic extension*. The district director, including the Assistant Commissioner (International), or the director of a service center may terminate at any time an automatic extension by mailing to the REMIC a notice of termination. The notice must be mailed at least 10 days prior to the termination date designated in such

notice. The notice of termination must be mailed to the address shown on Form 8736 or to the REMIC's last known address. For further guidance regarding the definition of last known address, see § 301.6212–2 of this chapter.

(e) *Penalties.* See sections 6698 and 6651 for failure to file a REMIC income tax return or failure to pay the amount shown as tax on the return.

(f) *Coordination with § 1.6081–1.* Except in undue hardship cases, no extension of time for filing a REMIC income tax return will be granted under § 1.6081–1 until an automatic extension has been allowed pursuant to the provisions of this section.

(g) *Effective date.* This section is effective for applications for an automatic extension of time to file a REMIC income tax return filed on or after December 31, 1996.

[T.D. 8703, 61 FR 69030, Dec. 31, 1996, as amended by T.D. 8939, 66 FR 2819, Jan. 12, 2001]

PLACE FOR FILING RETURNS OR OTHER DOCUMENTS

§ 1.6091–1 Place for filing returns or other documents.

(a) *In general.* Except as provided in § 1.6091–4, whenever a return, statement, or other document is required to be made under the provisions of subtitle A or F of the Code, or the regulations thereunder, with respect to any tax imposed by subtitle A of the Code, and the place for filing such return, statement, or other document is not provided for by the Code, it shall be filed at the place prescribed by the regulations contained in this chapter.

(b) *Place for filing certain information returns.* (1) For the place for filing returns of parnership income, see paragraph (e)(1) of § 1.6031–1.

(2) For the place for filing information returns by banks with respect to common trust funds, see § 1.6032–1.

(3) For the place for filing information returns by certain organizations exempt from taxation under section 501(a), see paragraph (e) of § 1.6033–1.

(4) For the place for filing information returns by trusts claiming charitable deductions under section 642(c), see paragraph (c) of § 1.6034–1.

(5) For the place for filing information returns by officers, directors, and shareholders of foreign personal holding companies, see paragraph (d) of § 1.6035–1 and paragraph (d) of § 1.6035–2.

(6) For the place for filing information returns relating to certain stock option transactions, see paragraph (c) of § 1.6039–1.

(7) For the place for filing returns of information reporting certain payments, see paragraph (a)(5) of § 1.6041–2 and § 1.6041–6.

(8) For the place for filing returns of information regarding payments of dividends, see paragraph (d) of § 1.6042–1 and paragraph (c) of § 1.6042–2 (relating to returns for calendar years after 1962).

(9) For the place for filing information returns by corporations relating to contemplated dissolution or liquidation, see paragraph (a) of § 1.6043–1.

(10) For the place for filing information returns by corporations relating to distributions in liquidation, see paragraph (a) of § 1.6043–2.

(11) For the place for filing returns of information regarding payments of patronage dividends, see paragraph (b) of § 1.6044–1, and paragraph (d) of § 1.6044–2 (relating to returns for calendar years after 1962).

(12) For the place for filing information returns relating to formation or reorganization of foreign corporations, see paragraph (e) of § 1.6046–1.

(13) For the place for filing information returns regarding certain payments of interest, see paragraph (c) of § 1.6049–1.

(14) For the place for filing information returns with respect to payment of wages in the form of group-term life insurance, see paragraph (b) of § 1.6052–1.

(15) For the place for filing information returns on Forms 1042–S with respect to certain amounts paid to foreign persons, see instructions to the form.

(16) For the place for filing information returns on Form 5074 with respect to the allocation of individual income tax to Guam, see paragraph (b)(3) of § 1.935–1 and paragraph (d) of § 301.7654–

1 of this chapter (Regulations on Procedure and Administration).

[T.D. 6500, 25 FR 12108, Nov. 26, 1960, as amended by T.D. 6887, 31 FR 8814, June 24, 1966; T.D. 6922, 32 FR 8713, June 17, 1967; T.D. 7284, 38 FR 20829, Aug. 3, 1973; T.D. 7385, 40 FR 50264, Oct. 29, 1975; T.D. 8734, 62 FR 53493, Oct. 14, 1997]

§ 1.6091–2 Place for filing income tax returns.

Except as provided in § 1.6091–3 (relating to income tax returns required to be filed with the Director of International Operations) and § 1.6091–4 (relating to exceptional cases):

(a) *Individuals, estates, and trusts.* (1) Except as provided in paragraph (c) of this section, income tax returns of individuals, estates, and trusts shall be filed with the district director for the internal revenue district in which is located the legal residence or principal place of business of the person required to make the return, or, if such person has no legal residence or principal place of business in any internal revenue district, with the District Director at Baltimore, Md. 21202.

(2) An individual employed on a salary or commission basis who is not also engaged in conducting a commercial or professional enterprise for profit on his own account does not have a ''principal place of business'' within the meaning of this section.

(b) *Corporations.* Except as provided in paragraph (c) of this section, income tax returns of corporations shall be filed with the district director for the internal revenue district in which is located the principal place of business or principal office or agency of the corporation.

(c) *Returns filed with service centers.* Notwithstanding paragraphs (a) and (b) of this section, whenever instructions applicable to income tax returns provide that the returns be filed with a service center, the returns must be so filed in accordance with the instructions.

(d) *Hand-carried returns.* Notwithstanding paragraphs (1) and (2) of section 6091(b) and paragraph (c) of this section:

(1) *Persons other than corporations.* Returns of persons other than corporations which are filed by hand carrying shall be filed with the district director (or with any person assigned the adminstrative supervision of an area, zone or local office constituting a permanent post of duty within the internal revenue district of such director) as provided in paragraph (a) of this section.

(2) *Corporations.* Returns of corporations which are filed by hand carrying shall be filed with the district director (or with any person assigned the administrative supervision of an area, zone or local office constituting a permanent post of duty within the internal revenue district of such director) as provided in paragraph (b) of this section.

See § 301.6091–1 of this chapter (Regulations on Procedure and Administration) for provisions relating to the definition of hand carried.

(e) *Amended returns.* In the case of amended returns filed after April 14, 1968, except as provided in paragraph (d) of this section:

(1) *Persons other than corporations.* Amended returns of persons other than corporations shall be filed with the service center serving the internal revenue district referred to in paragraph (a) of this section.

(2) *Corporations.* Amended returns of corporations shall be filed with the service center serving the internal revenue district referred to in paragraph (b) of this section.

(f) *Returns of persons subject to a termination assessment.* Notwithstanding paragraph (c) of this section:

(1) *Persons other than corporations.* Returns of persons other than corporations with respect to whom an assessment was made under section 6851(a) with respect to the taxable year shall be filed with the district director as provided in paragraph (a) of this section.

(2) *Corporations.* Returns of corporations with respect to whom an assessment was made under section 6851(a) with respect to the taxable year shall be filed with the district director as provided in paragraph (b) of this section.

(g) *Returns of persons subject to a termination assessment.* Notwithstanding paragraph (c) of this section, income tax returns of persons with respect to

whom an income tax assessment was made under section 6852(a) with respect to the taxable year must be filed with the district director as provided in paragraphs (a) and (b) of this section.

[T.D. 6950, 33 FR 5356, Apr. 4, 1968, as amended by T.D. 7012, 34 FR 7690, May 15, 1969; T.D. 7495, 42 FR 33726, July 1, 1977; T.D. 7575, 43 FR 58816, Dec. 18, 1978; T.D. 8628, 60 FR 62210, Dec. 5, 1995]

§ 1.6091–3 Income tax returns required to be filed with Director of International Operations.

The following income tax returns shall be filed with the Director of International Operations, Internal Revenue Service, Washington, DC 20225, or the district director, or the director of the service center, depending on the appropriate officer designated on the return form or in the instructions issued with respect to such form:

(a) Income tax returns on which all, or a portion, of the tax is to be paid in foreign currency. See §§ 301.6316–1 to 301.6316–6 inclusive, and §§ 301.6316–8 and 301.6316–9 of this chapter (Regulations on Procedure and Administration).

(b) Income tax returns on an individual citizen of the United States whose principal place of abode for the period with respect to which the return is filed is outside the United States. A taxpayer's principal place of abode will be considered to be outside the United States if his legal residence is outside the United States or if his return bears a foreign address.

(c) Income tax returns of an individual citizen of a possession of the United States (whether or not a citizen of the United States) who has no legal residence or principal place of business in any internal revenue district in the United States.

(d) Except in the case of any departing alien return under section 6851 and § 1.6851–2, the income tax return of any nonresident alien (other than one treated as a resident under section 6013 (g) or (h)).

(e) The income tax return of an estate or trust the fiduciary of which is outside the United States and has no legal residence or principal place of business in any internal revenue district in the United States.

(f) Income tax returns of foreign corporations.

(g) The return by a withholding agent of the income tax required to be withheld at source under chapter 3 of the Code on nonresident aliens and foreign corporations and tax-free covenant bonds, as provided in § 1.1461–2.

(h) Income tax returns of persons who claim the benefits of section 911 (relating to earned income from sources without the United States).

(i) Income tax returns of corporations which claim the benefits of section 922 (relating to special deduction for Western Hemisphere trade corporations) except in the case of consolidated returns filed pursuant to the regulations under section 1502.

(j) Income tax returns of persons who claim the benefits of section 931 (relating to income from sources within possessions of the United States).

(k) Income tax returns of persons who claim the benefits of section 933 (relating to income from sources within Puerto Rico).

(l) Income tax returns of corporations which claim the benefits of section 941 (relating to the special deduction for China Trade Act corporations).

[T.D. 6950, 33 FR 5357, Apr. 4, 1968, as amended by T.D. 7012, 34 FR 7690, May 15, 1969; T.D. 7670, 45 FR 6931, Jan. 31, 1980]

§ 1.6091–4 Exceptional cases.

(a) *Permission to file in district other than required district.* (1) The Commissioner may permit the filing of any income tax return required to be made under the provisions of subtitle A or F of the Code, or the regulations in this part, in any internal revenue district, notwithstanding the provisions of paragraphs (1) and (2) of section 6091(b) and §§ 1.6091–1 to 1.6091–3, inclusive.

(2) In cases where the Commissioner authorizes (for all purposes except venue) a director of an internal revenue service center to receive returns, such returns pursuant to instructions issued with respect thereto, may be sent directly to the director and are thereby filed with him for all purposes except as a factor in determining

venue. However, after initial processing all such returns shall be forwarded by the director of a service center to the office with which such returns are, without regard to this subparagraph, required to be filed. For the sole purpose of determining venue, such returns are filed only with such office.

(3) Notwithstanding the provisions of other sections of this chapter or any rule issued under this chapter:

(i) In cases where, in accordance with subparagraph (2) of this paragraph, a return is filed with the director of a service center, the authority of the district director with whom such return would, without regard to such subparagraph, be required to be filed shall remain the same as if the return had been so filed;

(ii) Unless a return or other document is a proper attachment to, or is, a return which the director of a service center is expressly authorized to receive, such return or other document shall be filed as if all returns sent directly to the service centers, in accordance with subparagraph (2) of this paragraph, were filed in the office where such returns are, without regard to such subparagraph, required to be filed; and

(iii) Unless the performance of an act is directly related to the sending of a return directly to the director of a service center, such act shall be performed as if all returns sent directly to the service centers, in accordance with subparagraph (2) of this paragraph, were filed in the office where such returns are, without regard to such subparagraph, required to be filed.

(4) The application of subparagraphs (2) and (3) of this paragraph may be illustrated by the following examples:

Example (1). The Commissioner has authorized the Director, Internal Revenue Service Center, Chamblee, Georgia (for all purposes except venue), to receive Forms 1040 and 1040A. A, a resident of Greensboro, North Carolina, is required to file his Form 1040 for the calendar year 1964 with the District Director, Greensboro, North Carolina. In addition, A is required to file his declaration of estimated tax, Form 1040ES, for the calendar year 1965, which under paragraph (c) of § 1.6073–1 must be filed with the district director for the district in which A expects to file his income tax return. Under subparagraph (2) of this paragraph A may send his Form 1040 to either the director of the service center or to his district director. However, since his Form 1040ES is not a proper attachment to his income tax return, he shall send his Form 1040ES to his district director (with whom he is, without regard to subparagraph (2) of this paragraph, required to file his income tax return).

Example (2). Assume the same facts as in Example (1), and in addition, that A is required to attach copies of his Forms W–2 to his income tax return, Form 1040. Therefore, A must attach copies of his Forms W–2 to his Form 1040 and send both to either his district director or the director of the service center.

Example (3). Assume the facts in Example (1) and in addition, that A sends his Form 1040 to the director of the service center. Assume further that A is entitled to file a claim under section 6421 for refund of certain taxes paid for gasoline used for certain nonhighway uses. Under paragraph (c) of § 48.6421(c)–1 of this chapter the claim on Form 843 shall be filed with the district director with whom the claimant filed his latest income tax return. Since Form 843 is not a proper attachment to A's Form 1040, the claim shall be sent to A's district director since his is the office with which A would, without regard to subparagraph (2) of this paragraph, be required to file his Form 1040.

Example (4). Taxpayer B sends his Form 1040 to the director of a service center. B wishes to apply for an extension of the period of replacement for involuntarily converted property pursuant to section 1033 of the Code. Under paragraph (c)(3) of § 1.1033(a)-2 of this chapter such application is to be made to the district director for the internal revenue district in which the income tax return is filed for the first taxable year during which any of the gain from the involuntary conversion is realized. Pursuant to subparagraph (3) of this paragraph, B shall apply to the district director for the internal revenue district in which such income tax return is, without regard to subparagraph (2) of this paragraph, required to be filed. Such district director is authorized to grant or withhold such extension of the period of replacement.

Example (5). Taxpayer C sends his return directly to the director of a service center. C wishes to receive certain information concerning the value of a reversionary interest with respect to his charitable contribution under section 170 of the Code. Under paragraph (d)(2) of § 1.170–2 of this Chapter, C may upon request, obtain the information from the district director with whom he files his income tax return. Under subparagraph (3) of this paragraph, C shall request such information from the district director with whom he would, without regard to subparagraph (2) of this paragraph, be required to file his return.

(b) *Returns of officers and employees of the Internal Revenue Service.* The Commissioner may require any officer or employee of the Internal Revenue Service to file his income tax return in any district selected by the Commissioner.

(c) *Residents of Guam.* Income tax returns of an individual citizen of the United States who is a resident of Guam shall be filed with Guam, as provided in paragraph (b)(1) of § 1.935–1.

[T.D. 6500, 25 FR 12108, Nov. 26, 1960, as amended by T.D. 6793, 30 FR 704, Jan. 22, 1965; T.D. 7385, 40 FR 50264, Oct. 29, 1975]

MISCELLANEOUS PROVISIONS

§ 1.6102–1 Computations on returns or other documents.

For provisions with respect to the rounding off to whole-dollar amounts of money items on returns and accompanying schedules, see § 301.6102–1 of this chapter (Regulations on Procedure and Administration).

[T.D. 6500, 25 FR 12137, Nov. 26, 1960]

§ 1.6107–1 Income tax return preparer must furnish copy of return to taxpayer and must retain a copy or record.

(a) *Furnishing copy to taxpayer.* The person who is an income tax return preparer of any return of tax under subtitle A of the Internal Revenue Code of 1954 or claim for refund of tax under subtitle A of the Internal Revenue Code of 1954 shall furnish a completed copy of the original return or claim for refund to the taxpayer (or nontaxable entity) not later than the time the original return or claim for refund is presented for the signature of the taxpayer (or nontaxable entity). The preparer may, if it wishes request a receipt or other evidence from the taxpayer (or nontaxable entity) sufficient to show satisfaction of the requirement of this paragraph (a).

(b) *Copy or record to be retained.* The person who is an income tax return preparer of any return or claim for refund shall:

(1)(i) Retain a completed copy of the return or claim for refund; or

(ii) Retain a record, by list, card file, or otherwise of the name, taxpayer identification number, and taxable year of the taxpayer (or nontaxable entity) for whom the return or claim for refund was prepared and the type of return of claim for refund prepared;

(2) Retain a record, by retention of a copy of the return or claim for refund, maintenance of a list or card file, or otherwise, for each return or claim for refund presented to the taxpayer (or nontaxable entity) of the name of the individual preparer required to sign the return or claim for refund pursuant to § 1.6695–1(b); and

(3) Make the copy or record of returns and claims for refund and record of the individuals required to sign available for inspection upon request by the district director.

The material described in this paragraph (b) shall be retained and kept available for inspection for the 3–year period following the close of the return period during which the return or claim for refund was presented for signature to the taxpayer (or nontaxable entity). However, in the case of a return which becomes due (with extensions, if any) during a return period following the return period during which the return was presented for signature, the material shall be retained and kept available for inspection or the 3–year period following the close of the later return period in which the return became due. For the definition of ''return period'' see section 6060(c). If the person subject to the record retention requirement of this paragraph (b) is a corporation or a partnership which is dissolved before completion of the 3-year period, then all persons who under state law are responsible for the winding up of the affairs of the corporation or partnership shall be subject, on behalf of the corporation or partnership, to these record retention requirements until completion of the 3-year period. If state law does not specify any person or persons as responsible for winding up, then, collectively, the directors or general partners shall be subject, on behalf of the corporation or partnership, to the record retention requirements of this paragraph (b). For purposes of the penalty imposed by section 6695(d), such designated persons shall be deemed to be the income tax return preparer and will be jointly and severally liable for each failure.

(c) *Preparer*. For the definition of ''income tax return preparer'', see section 7701(a)(36) and § 3071.7701–15. For purposes of applying this section, in the case of:

(1) An employment arrangement between two or more income tax return preparers, the person who employs (or engages) one or more other preparers to prepare for compensation any return or claim for refund other than for the person shall be considered to be the sole income tax return preparer; and

(2) A partnership arrangement for the preparation of returns and claims for refund, the partnership shall be considered to be the sole income tax return preparer.

(d) *Penalties*. (1) For the civil penalty for failure to furnish a copy of the return or claim for refund to the taxpayers (or nontaxable entity) as required under paragraphs (a) and (c) of this section, see section 6695(a) and § 1.6695–(a).

(2) For the civil penalty for failure to retain a copy of the return or claim for refund, or to retain a record as required under paragraphs (b) and (c) of this section, see section 6695(d) and § 1.6695–1(d).

(Sec. 6060(b), Internal Revenue Code of 1954 (90 Stat. 1691, (26 U.S.C. 6060(b))); sec. 7805, Internal Revenue Code of 1954 (68A Stat. 917, (26 U.S.C. 7805))

[T.D. 7519, 42 FR 59967, Nov. 23, 1977, as amended by T.D. 7640, 44 FR 49452, Aug. 23, 1979; T.D. 7948, 49 FR 8601, Mar. 8, 1984]

§ 1.6109–1 Identifying numbers.

(a) *Information to be furnished after April 15, 1974*. For provisions concerning the requesting and furnishing of identifying numbers with respect to returns, statements, and other documents which must be filed after April 15, 1974, see § 301.6109–1 of this chapter (Regulations on Procedure and Administration).

(b) *Information to be furnished before April 15, 1974*. For provisions concerning the requesting and furnishing of identifying numbers with respect to returns, statements, and other documents which must be filed before April 16, 1974, see 26 CFR § 1.6109–1 (revised as of April 1, 1973).

[T.D. 7306, 39 FR 9946, Mar. 15, 1974; 39 FR 11080, Mar. 25, 1974]

§ 1.6109–2 Furnishing identifying number of income tax return preparer.

(a) *Furnishing identifying number*. For returns or claims for refund filed prior to January 1, 2000, each return of tax under subtitle A of the Internal Revenue Code or claim for refund of tax under subtitle A of the Internal Revenue Code prepared by one or more income tax return preparers must bear the identifying number of the preparer required by § 1.6695–1(b) to sign the return or claim for refund. In addition, it there is a partnership or employment arrangement between two or more preparers, the identifying number of the partnership or the person who employs (or engages) one or more other persons to prepare for compensation the return or claim for refund shall also appear on the return or claim for refund. If the preparer is:

(1) An individual (not described in subparagraph (2) of this paragraph (a) who is a citizen or resident of the United States such preparer's social security account number shall be affixed; and

(2) A person (whether an individual, corporation, or partnership) who employs (or engages) one or more persons to prepare the return or claim for refund (other than for the person), or who is not a citizen or resident of the United States and also is not employed or engaged by another preparer, such preparer's employer identification number shall be affixed.

For the definition of the term ''income tax return preparer'' (or ''preparer'') see section 7701(a)(36) and § 301.7701–15.

(b) *Furnishing address*. (1) Each return or claim for refund which is prepared by one or more income tax return preparers shall bear the street address, city, State, and postal ZIP code of that preparer's place of business where the preparation of the return or claim for refund was completed. However, if this place of business is not maintained on a year-round basis, the return or claim for refund shall bear the street address, city, State, and postal ZIP code of such preparer's principal office or business

location which is maintained on a yearround basis, or it none, that preparer's residence.

(2) For purposes of satisfying the requirement of the first sentence of paragraph (b)(1) of this section, and income tax return preparer, may, on returns and claims for refund, disclose only the postal ZIP code of the described place of business as a satisfactory address, but only if the preparer first by written notice advises each affected Internal Revenue Service Center that he intends to follow this practice.

(c) *Penalty*. For the civil penalty for failure to furnish an identifying number as required under paragraph (a) of this section, see section 6695(c) and § 1.6695–1(c).

(d) *Effective date*. Paragraph (a) of this section and this paragraph (d) apply to returns or claims for refund filed prior to January 1, 2000. For returns or claims for refund filed after December 31, 1999, see § 1.6109–2T(a).

[T.D. 7519, 42 FR 59967, Nov. 23, 1977, as amended by T.D. 8835, 64 FR 43911, Aug. 12, 1999]

§ 1.6109–2T Furnishing identifying number of income tax return preparer (temporary).

(a) *Furnishing identifying number*. (1) Each return of tax, or claim for refund of tax, under subtitle A of the Internal Revenue Code prepared by one or more income tax return preparers must include the identifying number of the preparer required by § 1.6695–1(b) to sign the return or claim for refund. In addition, if there is a partnership or employment arrangement between two or more preparers, the identifying number of the partnership or employer must also appear on the return or claim for refund. For the definition of the term income tax return preparer (or preparer) see section 7701(a)(36) and § 301.7701–15 of this chapter.

(2) The identifying number of a preparer who is an individual (not described in paragraph (a)(3) of this section) is that individual's social security account number, or such alternative number as may be prescribed by the Internal Revenue Service in forms, instructions, or other appropriate guidance.

(3) The identifying number of a preparer (whether an individual, corporation, or partnership) who employs or engages one or more persons to prepare the return or claim for refund (other than for the preparer) is that preparer's employer identification number.

(b) and (c) [Reserved]. For further guidance, see § 1.6109–2(b) and (c).

(d) *Effective date*. Paragraph (a) of this section and this paragraph (d) apply to returns or claims for refund filed after December 31, 1999. For returns or claims for refund filed prior to January 1, 2000, see § 1.6109–2(a).

[T.D. 8835, 64 FR 43911, Aug. 12, 1999]

§ 1.6115–1 Disclosure requirements for quid pro quo contributions.

(a) *Good faith estimate defined*—(1) *In general*. A good faith estimate of the value of goods or services provided by an organization described in section 170(c) in consideration for a taxpayer's payment to that organization is an estimate of the fair market value, within the meaning of § 1.170A–1(c)(2), of the goods or services. The organization may use any reasonable methodology in making a good faith estimate, provided it applies the methodology in good faith. If the organization fails to apply the methodology in good faith, the organization will be treated as not having met the requirements of section 6115. See section 6714 for the penalties that apply for failure to meet the requirements of section 6115.

(2) *Good faith estimate for goods or services that are not commercially available*. A good faith estimate of the value of goods or services that are not generally available in a commercial transaction may be determined by reference to the fair market value of similar or comparable goods or services. Goods or services may be similar or comparable even though they do not have the unique qualities of the goods or services that are being valued.

(3) *Examples*. The following examples illustrate the rules of this paragraph (a).

Example 1. Facility not available on a commercial basis. Museum *M*, an organization described in section 170(c), is located in Community *N*. In return for a payment of $50,000 or more, *M* allows a donor to hold a private

event in a room located in *M*. Private events other than those held by such donors are not permitted to be held in *M*. In Community *N*, there are four hotels, *O*, *P*, *Q*, and *R*, that have ballrooms with the same capacity as the room in *M*. Of these hotels, only *O* and *P* have ballrooms that offer amenities and atmosphere that are similar to the amenities and atmosphere of the room in *M* (although *O* and *P* lack the unique collection of art that is displayed in the room in *M*). Because the capacity, amenities, and atmosphere of ballrooms in *O* and *P* are comparable to the capacity, amenities, and atmosphere of the room in *M*, a good faith estimate of the benefits received from *M* may be determined by reference to the cost of renting either the ballroom in *O* or the ballroom in *P*. The cost of renting the ballroom in *O* is $2500 and, therefore, a good faith estimate of the fair market value of the right to host a private event in the room at *M* is $2500. In this example, the ballrooms in *O* and *P* are considered similar and comparable facilities to the room in *M* for valuation purposes, notwithstanding the fact that the room in *M* displays a unique collection of art.

Example 2. Services available on a commercial basis. Charity *S* is an organization described in section 170(c). *S* offers to provide a one-hour tennis lesson with Tennis Professional *T* in return for the first payment of $500 or more that it receives. *T* provides one-hour tennis lessons on a commercial basis for $100. Taxpayer pays $500 to *S* and in return receives the tennis lesson with *T*. A good faith estimate of the fair market value of the lesson provided in exchange for Taxpayer's payment is $100.

Example 3. Celebrity presence. Charity *U* is an organization described in section 170(c). In return for the first payment of $1000 or more that it receives, *U* will provide a dinner for two followed by an evening tour of Museum *V* conducted by Artist *W*, whose most recent works are on display at *V*. *W* does not provide tours of *V* on a commercial basis. Typically, tours of *V* are free to the public. Taxpayer pays $1000 to *U* and in return receives a dinner valued at $100 and an evening tour of *V* conducted by *W*. Because tours of *V* are typically free to the public, a good faith estimate of the value of the evening tour conducted by *W* is $0. In this example, the fact that Taxpayer's tour of *V* is conducted by *W* rather than *V*'s regular tour guides does not render the tours dissimilar or incomparable for valuation purposes.

(b) *Certain goods or services disregarded.* For purposes of section 6115, an organization described in section 170(c) may disregard goods or services described in § 1.170A–13(f)(8)(i).

(c) *Value of the right to purchase tickets to college or university athletic events.* For purposes of section 6115, the right to purchase tickets for seating at an athletic event in exchange for a payment described in section 170(l) is treated as having a value equal to twenty percent of such payment.

(d) *Goods or services provided to employees or partners of donors*—(1) *Certain goods or services disregarded.* For purposes of section 6115, goods or services provided by an organization described in section 170(c) to employees of a donor or to partners of a partnership that is a donor in return for a payment to the donee organization may be disregarded to the extent that the goods or services provided to each employee or partner are the same as those described in § 1.170A–13(f)(8)(i).

(2) *Description permitted in lieu of good faith estimate for other goods or services.* The written disclosure statement required by section 6115 may include a description of goods or services, in lieu of a good faith estimate of their value, if the donor is—

(i) An employer and, in return for the donor's quid pro quo contribution, an organization described in section 170(c) provides the donor's employees with goods or services other than those described in paragraph (d)(1) of this section; or

(ii) A partnership and, in return for its quid pro quo contribution, the organization provides partners in the partnership with goods or services other than those described in paragraph (d)(1) of this section.

(e) *Effective date.* This section applies to contributions made on or after December 16, 1996. However, taxpayers may rely on the rules of this section for contributions made on or after January 1, 1994.

[T.D. 8690, 61 FR 65954, Dec. 16, 1996]

TIME AND PLACE FOR PAYING TAX

PLACE AND DUE DATE FOR PAYMENT OF TAX

§ 1.6151–1 Time and place for paying tax shown on returns.

(a) *In general.* Except as provided in section 6152 and paragraph (b) of this section, the tax shown on any income tax return shall, without assessment or

notice and demand, be paid to the internal revenue officer with whom the return is filed at the time fixed for filing the return (determined without regard to any extension of time for filing the return). For provisions relating to the time for filing income tax returns, see section 6072 and §§ 1.6072–1 to 1.6072–4, inclusive. For provisions relating to the place for filing income tax returns, see section 6091 and §§ 1.6091–1 to 1.6091–4, inclusive.

(b)(1) *Returns on which tax is not shown.* If a taxpayer files a return and in accordance with section 6014 and the regulations thereunder, elects not to show the tax on the return, the amount of tax determined to be due shall be paid within 30 days after the date of mailing to the taxpayer a notice stating the amount payable and making demand upon the taxpayer therefor. However, if the notice is mailed to the taxpayer more than 30 days before the due date of the return, payment of the tax shall not be required prior to such due date.

(2) *Where tax is shown on the return.* In any case in which a taxpayer files a return on Form 1040A pursuant to paragraph (a)(7) of § 1.6012–1 and shows the amount of tax on the return, the unpaid balance of the tax shall, without assessment or notice and demand, be paid not later than the date fixed for filing the return.

(c) *Date fixed for payment of tax.* In any case in which a tax imposed by subtitle A of the Code is required to be paid on or before a certain date, or within a certain period, any reference in subtitle A or F of the Code to the date fixed for payment of such tax shall be deemed a reference to the last day fixed for such payment (determined without regard to any extension of time for paying the tax).

(d) *Use of Government depositaries.* (1) For provisions relating to the use of Federal Reserve banks or authorized financial institutions in depositing income and estimated income taxes of certain corporations, see § 1.6302–1.

(2) For provisions relating to the use of such financial institutions for the deposit of taxes required to be withheld under chapter 3 of the Code on nonresident aliens and foreign corporations and tax-free covenant bonds, see § 1.6302–2.

(Approved by the Office of Management and Budget under control number 1545–0257)

[T.D. 6500, 25 FR 12137, Nov. 26, 1960, as amended by T.D. 6922, 32 FR 8713, June 17, 1967; T.D. 6950, 33 FR 5357, Apr. 4, 1968; T.D. 7102, 36 FR 5498, Mar. 24, 1971; T.D. 7953, 49 FR 19644, May 9, 1984]

§ 1.6152–1 Installment payments.

(a) *Privilege of corporation to elect to make installment payments*—(1) *Amount to be paid.* In the case of any taxable year ending on or after December 31, 1954, a corporation subject to the taxes imposed by chapter 1 of the Code may elect, as provided in subparagraph (2) of this paragraph, to pay the unpaid amount of such tax for the taxable year in two equal installments instead of making a single payment. If such an election is made, the installments shall be paid as follows:

(i) Fifty percent on or before the date prescribed for the payment of the tax as a single payment, and

(ii) The remaining 50 percent on or before three months after the date prescribed for the payment of the first installment.

For provisions relating to installment payments of estimated income tax by corporations, see section 6154 and §§ 1.6154–1 to 1.6154–3, inclusive.

(2) *Method of election.* A corporation shall be considered to have made an election to pay its tax in installments if:

(i) It files its income tax return on or before the date prescribed therefor (determined without regard to any extension of time) and pays 50 percent of the unpaid amount of the tax at such time, or

(ii) It files an application on Form 7004 for an automatic extension of time to file its income tax return, as provided in § 1.6081–3, and pays 50 percent of the unpaid amount of the tax at such time. Except as provided in paragraph (c) of this section, the installment privilege is limited to the unpaid amount of tax as shown on the income tax return filed in accordance with the provisions of subdivision (i) of this subparagraph, or as shown on the Form 7004 filed in accordance with the provisions of this subdivision.

(3) *Use of Government depositaries*. For provisions relating to the use of Federal Reserve banks and authorized financial institutions in depositing the taxes see § 1.6302–1.

(b) *Privilege of estates of decedents to make installment payments*. With respect to the income tax imposed by chapter 1 of the Code upon estates of decedents, the fiduciary may elect to pay the tax in four equal installments instead of in a single payment. If the election is made, the tax shall be paid as follows:

(1) Twenty-five percent on or before the date prescribed for the payment of the tax as a single payment,

(2) Twenty-five percent on or before three months after the date prescribed for payment of the first installment,

(3) Twenty-five percent on or before six months after the date prescribed for payment of the first installment, and

(4) Twenty-five percent on or before nine months after the date prescribed for payment of the first installment.

(c) *Proration of deficiency to installments*. If an election has been made to pay the tax imposed by chapter 1 of the Code in installments, and a deficiency has been assessed, the deficiency shall be prorated equally to all the installments, whether paid or unpaid. Except as provided in section 6861, relating to jeopardy assessment, the part of the deficiency so prorated to any installment which is not yet due shall be collected at the same time as and as part of such installment. The part of the deficiency so prorated to any installment the date for payment of which has arrived shall be paid upon notice and demand from the district director.

(d) *Acceleration of payment*. If a taxpayer elects under the provisions of this section to pay the tax in installments, any installment may be paid prior to the date prescribed for its payment. If an installment is not paid in full on or before the date fixed for its payment the whole amount of the unpaid tax shall be paid upon notice and demand from the district director.

(Approved by the Office of Management and Budget under control number 1545–0257)

[T.D. 6500, 25 FR 12138, Nov. 26, 1960, as amended by T.D. 6914, 32 FR 3819, Mar. 8, 1967; T.D. 7953, 49 FR 19644, May 9, 1984]

§ 1.6153–1 Payment of estimated tax by individuals.

(a) *In general*. (1) The time for payment of the estimated tax by individuals for calendar years shall be as follows:

Date of filing declaration	Dates of payment of estimated tax
(i) On or before April 15	In 4 equal installments—one at time of filing declaration, one on or before June 15, one on or before September 15, and one on or before January 15 of the succeeding taxable year
(ii) After April 15 and before June 16 if not required to be filed on or before April 15.	In 3 equal installments—one at time of filing declaration, one on or before September 15, and one on or before January 15 of the succeeding taxable year
(iii) After June 15 and before September 16 if not required to be filed on or before June 15.	In 2 equal installments—one at time of filing declaration, and the other on or before January 15 of the succeeding taxable year
(iv) After September 15 if not required to be filed on or before September 15.	In full at time of filing declaration

(2) If, for example, due to the nature and amount of his gross income for 1955, the taxpayer is not required to file his declaration as of April 15, but is required to file the declaration on or before June 15, 1955, the case comes within the scope of subparagraph (1)(ii) of this paragraph and the estimated tax is payable in 3 equal installments, the 1st on the date of filing, the 2d on or before September 15, 1955, and the 3d installment on or before January 15, 1956.

(3) If a declaration is filed after the time prescribed in section 6073(a) (including any extension of time granted for filing the declaration), there shall be paid at such time all installments of the estimated tax which would have been payable on or before such date of filing if the declaration had been timely filed in accordance with the provisions of section 6073(a). The remaining installments shall be paid at the times and in the amounts in which they

would have been payable if the declaration had been timely filed. Thus, for example, B, a single man who makes his return on the calendar year basis, was employed from the beginning of 1955 and for several years prior thereto at an annual salary of $6,000, thus meeting the requirements of section 6015(a). B filed his declaration for 1955 on September 16, 1955. In such case, B should have filed a declaration on or before April 15, 1955, and at the time of filing his declaration he was delinquent in the payment of three installments of his estimated tax for the taxable year 1955. Hence, upon his filing the declaration on September 16, 1955, three-fourths of the estimated tax shown thereon must be paid.

(4) In the case of a decedent, payments of estimated tax are not required subsequent to the date of death. See, however, paragraph (c) of § 1.6015(b)–1, relating to the making of an amended declaration by a surviving spouse if a joint declaration was made before the death of the decedent.

(5) The payment of any installment of the estimated tax shall be considered payment on account of the tax for such taxable year. Hence, upon the return for such taxable year, the aggregate amount of the payments of estimated tax should be entered as payments to be applied against the tax shown on such return.

(b) *Farmers or fishermen*. Special provisions are made with respect to the filing of the declaration and the payment of the tax by an individual whose estimated gross income from farming or, with respect to taxable years beginning after December 31, 1962, from fishing is at least two-thirds of his total gross income from all sources for the taxable year. As to what constitutes income from farming or fishing within the meaning of this paragraph, see paragraph (b) of § 1.6073–1. The declaration of such an individual may be filed on or before January 15 of the succeeding taxable year in lieu of the time prescribed for individuals generally. Where such an individual makes a declaration of estimated tax after September 15 of the taxable year, the estimated tax shall be paid in full at the time of the filing of the declaration.

(c) *Amendment of declaration*. If any amendment of a declaration is filed, the remaining installments, if any, shall be ratably increased or decreased, as the case may be, to reflect the increase or decrease in the estimated tax by reason of the amendment. If any amendment is made after September 15 of the taxable year, any increase in the estimated tax by reason thereof shall be paid at the time of making the amendment.

(d) *Installments paid in advance*. At the election of the taxpayer any installment of the estimated tax may be paid prior to the date prescribed for its payment.

[T.D. 6500, 25 FR 12139, Nov. 26, 1960, as amended by T.D. 6678, 28 FR 10517, Oct. 1, 1963]

§ 1.6153–2 Fiscal years.

In the case of an individual on the fiscal year basis, the dates prescribed for payment of the estimated tax shall be the 15th day of the 4th month, the 15th day of the 6th month, and the 15th day of the 9th month of the taxable year and the 15th day of the 1st month of the succeeding taxable year. For example, if an individual having a fiscal year ending on June 30, 1956, first meets the requirements of section 6015(a) on January 15, 1956, and the declaration is filed on or before March 15, 1956, the estimated tax shall be paid in 2 equal installments, one at the time of filing of such declaration and the other on or before July 15, 1956.

[T.D. 6500, 25 FR 12139, Nov. 26, 1960]

§ 1.6153–3 Short taxable years.

In the case of a short taxable year of an individual for which a declaration is required to be filed the estimated tax shall be paid in equal installments, one at the time of filing the declaration, one on the 15th day of the 6th month of the taxable year and another on the 15th day of the 9th month of such year unless the short taxable year closed during or prior to such 6th or 9th month, and one on the 15th day of the 1st month of the succeeding taxable year. For example, if the short taxable year is the period of 10 months from January 1, 1955, to October 31, 1955, and the declaration is required to be filed

on or before April 15, 1955, the estimated tax is payable in 4 equal installments, one on the date of filing the declaration, and one each on June 15, September 15, and November 15, 1955. If in such case the declaration is required to be filed after April 15 but on or before June 15, the tax will be payable in 3 equal installments, one on the date of filing the declaration, and one each on September 15, and November 15, 1955. The provisions of paragraph (a)(3) of § 1.6153–1, relating to payment of estimated tax in any case in which the declaration is filed after the time prescribed in section 6073 and §§ 1.6073–1 to 1.6073–4, inclusive, are equally applicable to the payment of the estimated tax for short taxable years.

[T.D. 6500, 25 FR 12139, Nov. 26, 1960]

§ 1.6153–4 Extension of time for paying the estimated tax.

An extension of time granted an individual under section 6081 for filing the declaration of estimated tax automatically extends the time for paying the estimated tax (without interest) for the same period. See § 1.6073–4 for rules relating to extensions of time for filing declarations of estimated tax by individuals. Except as provided in paragraph (b) of § 301.6091–1 (relating to hand-carried documents), an application for an extension of time for paying a particular installment of the estimated tax shall be addressed to the internal revenue officer with whom the taxpayer files his declaration. Each application must contain a full recital of the causes for the delay. Such extension may be for a reasonable period not to exceed 6 months from the date fixed for payment thereof except in the case of a taxpayer who is abroad. Such extension does not relieve the taxpayer from the addition to the tax imposed by section 6654, and the period of the underpayment will be determined under section 6654(c) without regard to such extension.

[T.D. 6950, 33 FR 5357, Apr. 4, 1968]

§ 1.6154–1 Payment of estimated tax by corporations.

(a) *Taxable years beginning on or before December 31, 1963*—(1) *Amount required to be paid*. Every corporation required to file a declaration of estimated tax for a taxable year beginning on or before December 31, 1963, shall pay the following percentage of its estimated tax:

If the taxable year ends—	The amount required to be paid is the following percentage of the estimated tax
On or after Dec. 31, 1955, and before Dec. 31, 1956 ..	10
On or after Dec. 31, 1956, and before Dec. 31, 1957 ..	20
On or after Dec. 31, 1957, and before Dec. 31, 1958 ..	30
On or after Dec. 31, 1958, and before Dec. 31, 1959 ..	40
On or after Dec. 31, 1959	50

(2) *Time for payment*. (i) In the case of a corporation on the calendar year basis which files its declaration on or before September 15 of the taxable year, the percentage of the estimated tax required to be paid is payable in two equal installments, one at the time of filing the declaration, and the other on or before December 15 of the taxable year. If the corporation files its declaration after September 15 of the taxable year, the percentage of the estimated tax required to be paid is payable in full on or before December 15 of the taxable year.

(ii) In the case of a corporation whose taxable year is a fiscal year, the dates prescribed for payment of the estimated tax shall be the 15th day of the 9th month and the 15th day of the 12th month of such taxable year. If the corporation files its declaration after the 15th day of such 9th month, the percentage of the estimated tax required to be paid is payable in full on or before the 15th day of such 12th month.

(3) *Amendment of declaration*. In the case of an amended declaration, filed in accordance with section 6074, the installment payable on the 15th day of the 12th month of the taxable year shall be ratably increased or decreased, as the case may be, to reflect the increase or decrease in the estimated tax by reason of the amended declaration. For example, X, a corporation on the calendar year basis, filed a declaration on September 15, 1955, reporting an estimated tax in the amount of $20,000. The first installment of $1,000 (5 percent of $20,000) accompanied the declaration. However, X filed an amended declaration on December 15, 1955, showing an estimated tax of $30,000. Since X

has already paid $1,000, it must make a payment in the amount of $2,000 computed as follows:

Required amount of estimated tax which must be paid for calendar year 1955 (10% of $30,000)	$3,000
Amount paid with original estimate (5% of $20,000)	1,000
Balance to accompany amended declaration	2,000

Had the amended declaration been filed on December 10, 1955, then only the balance of the first installment ($500) otherwise due on September 15 would have been required to be paid with the declaration and the installment required to be paid on or before December 15, 1955, would be $1,500.

(b) *Taxable years beginning after December 31, 1963*—(1) *Amount and time for payment of each installment*—(i) *In general.* Paragraphs (1) through (4) of section 6154(a) contain four tables setting forth the percentages of estimated tax for each taxable year beginning after December 31, 1963, which shall be paid as installments of estimated tax and the date on or before which each such installment shall be paid. The date on or before which the declaration of estimated tax for a taxable year is required, under the provisions of section 6074(a), to be filed determines which of the four installment payment tables shall be used by the corporation for that taxable year. Therefore, if the declaration is required to be filed by the 15th day of the 4th, 6th, 9th, or 12th month, the estimated tax will be required to be paid in four, three, two, or one installment, respectively. However, see subdivision (iii) of this subparagraph for the rules applicable in case of the late filing of a declaration.

(ii) *Examples.* The application of the tables in section 6154(a) may be illustrated by the following examples:

Example (1). X, a corporation reporting on a calendar year basis, is required for the calendar year 1966 to file a declaration of estimated tax on or before the 15th day of the 4th month thereof (April 15, 1966) reporting an estimated tax liability of $250,000. Assuming that the original declaration is filed on or before April 15, 1966, and is not subsequently amended, X is required to pay its estimated tax in four installments. The first and second installments, each in the amount of $22,500 (9 percent of $250,000), are to be paid on or before April 15, 1966, and June 15, 1966, respectively, and the third and fourth installments, each in the amount of $62,500 (25 percent of $250,000), are to be paid on or before September 15, 1966, and December 15, 1966, respectively.

Example (2). Y, a corporation which reports on a calendar year basis, is required for the calendar year 1967 to file a declaration of estimated tax on or before the 15th day of the 6th month thereof (June 15, 1967) reporting an estimated tax liability of $100,000. Assuming that the original declaration is filed on or before June 15, 1967, and is not subsequently amended, Y is required to pay its estimated tax in three installments. The first installment, in the amount of $18,666.67 (18⅔ percent of $100,000), is to be paid on or before June 15, 1967, and the second and third installments, each in the amount of $29,666.67 (29⅔ percent of $100,000), are to be paid on or before September 15, 1967, and December 15, 1967, respectively.

Example (3). Z, a corporation which reports on a fiscal year basis ending with June 30 of each year, is required for the fiscal year ended June 30, 1968, to file a declaration of estimated tax on or before the 15th day of the fourth month thereof (October 15, 1967) reporting an estimated tax liability of $200,000. Assuming that the original declaration is filed on or before October 15, 1967, and is not subsequently amended, Z is required to pay its estimated tax in four installments. The first and second installments, each in the amount of $28,000 (14 percent of $200,000), are to be paid on or before October 15, 1967, and December 15, 1967, respectively, and the third and fourth installments, each in the amount of $50,000 (25 percent of $200,000), are to be paid on or before March 15, 1968, and June 15, 1968, respectively.

(iii) *Late filing of declaration of estimated tax.* If a declaration of estimated tax is filed after the date prescribed by section 6074(a) (determined without regard to any extension of time for filing the declaration under section 6081), the tables set forth in paragraphs (2), (3), and (4) of section 6154(a) do not apply except as provided in this subdivision. In such a case, there shall be paid at the time of the filing of the declaration all installments of the estimated tax which would have been payable under the appropriate table in section 6154(a) on or before such date of filing if the declaration had been timely filed in accordance with the provisions of section 6074(a). The remaining installments shall be paid at the times and in the amounts in which they would have been payable if the declaration had been timely filed. For example, Z, a

corporation filing its returns on a calendar year basis, fails to file a declaration of estimated tax on April 15, 1968, even though the requirements for filing a declaration were met before April 1, 1968. However, Z does file its declaration of estimated tax on July 1, 1968, disclosing an estimated tax of $75,000. As the first two installment dates specified in paragraph (1) of section 6154(a) (the 15th days of the 4th and 6th months) have passed, Z is required to pay $28,500 (2 installments, each in the amount of 19 percent of $75,000) when the declaration is filed on July 1, 1968. If there are no subsequent amendments of the declaration for this year, Z will be required to pay installments, each in the amount of $18,750 (25 percent of $75,000), on or before September 15, 1968, and December 15, 1968, respectively.

(2) *Amendment of declaration*—(i) *In general*. If any amendment of a declaration is filed, the amount of each remaining installment (including the installment due on the date of the filing of the amendment where the amendment is filed on an installment date), if any, is the amount which would have been payable as such installment if the new estimate had been the original estimate, adjusted as provided in this subdivision. The adjustment is for the difference between *(a)* the amount of estimated tax required to be paid before the date of the filing of the amendment and *(b)* the amount of estimated tax which would have been required to have been paid before such date if the new estimate had been the original estimate. The difference is divided by the number of remaining installments (including the installment due on the date of the filing of the amendment where the amendment is filed on an installment date), and the resulting amount is added to (if the amended declaration increases the amount of estimated tax) or subtracted from (if the amended declaration decreases the amount of the estimated tax) the amount which would have been payable on each remaining installment date if the new estimate had been the original estimate.

(ii) *Examples*. The application of the provisions of this subparagraph may be illustrated by the following examples:

Example (1). X, a calendar year corporation, determines that its estimated tax liability for the year 1967 is $100,000 and files a declaration of estimated tax by April 15, 1967, with an installment payment of $14,000. On June 15, 1967, the second installment payment of $14,000 is made. On July 1, 1967, X discovers that its 1967 estimated tax may reasonably be expected to be $150,000 and on September 15, 1967, files an amended declaration in that amount. The amounts to be paid on September 15, 1967, and December 15, 1967, are computed as follows:

Installment payments required to be made under the original declaration before date of filing of amendment (14% of $100,000 is $14,000×2)	$28,000
Installment payments which would have been required to be made before date of filing of amendment if the original declaration were in the amount of the amended declaration (14% of $150,000 is $21,000×2)	42,000
Difference	14,000
Amount of each installment payment due on September 15, 1967, and December 15, 1967, computed as if the original declaration were in the amount of the amended declaration (25% of $150,000)	$37,500
Add: Amount of difference divided by number of remaining installments ($14,000÷2)	7,000
Amount of each remaining installment (September 15, 1967, and December 15, 1967)	44,500

Example (2). Assume the same facts as in example (1), except that instead of filing the amended declaration on September 15, 1967, X files an amended declaration on June 15, 1967, disclosing an estimated tax of $70,000. The installment payments for June 15, 1967, September 15, 1967, and December 15, 1967, are computed as follows:

Installment payment required to be made under the original declaration before the date of filing of amendment (14% of $100,000)	$14,000
Installment payment which would have been required to be made before date of filing of amendment if the original declaration were in the amount of the amended declaration (14% of $70,000)	9,800
Difference	4,200
June 15, 1967, installment computation:	
Installment payment due on June 15, 1967, computed as if the original declaration were in the amount of the amended declaration (14% of $70,000)	9,800
Less: Amount of difference divided by number of remaining installments ($4,200÷3)	1,400
Amount to be paid as an installment on June 15, 1967	8,400
September 15, 1967, and December 15, 1967, installments computation:	
Amount of each installment payment due on September 15, 1967, and December 15, 1967, computed as if the original declaration were in the amount of the amended declaration (25% of $70,000)	17,500

Less: Amount of difference divided by number of remaining installments ($4,200÷3)	1,400
Amount of each remaining installment (September 15, 1967, and December 15, 1967)	16,100

(c) *Installments paid in advance.* A corporation may, at its election, pay any installment of its estimated tax in advance of the due date.

(d) *Considered payment of income tax.* Payments of estimated tax shall be considered payments on account of the income tax liability for the taxable year. Hence the amount of estimated tax paid shall be entered on the income tax return and applied in payment of the tax liability shown thereon.

[T.D. 6768, 29 FR 14924, Nov. 4, 1964]

§ 1.6154–2 Short taxable years.

(a) *Taxable years beginning on or before December 31, 1963*—(1) *In general.* In the case of a corporation filing a declaration for a short taxable year beginning on or before December 31, 1963, the amount of the estimated tax required to be paid shall be paid as follows:

(i) If the short taxable year is a period of more than 9 months and the declaration is required to be filed on or before the 15th day of the 9th month, the amount of the estimated tax required to be paid shall be paid in 2 installments; the 1st on or before the 15th day of the 9th month and the 2d on or before the 15th day of the last month of the short taxable year.

(ii) If the short taxable year is a period of 9 or more months and the declaration is not required to be filed until the 15th day of the last month of the short taxable year, the amount of the estimated tax required to be paid shall be paid in full on or before the 15th day of the last month of the short taxable year.

(2) *Examples.* The application of the provisions of subparagraph (1) of this paragraph may be illustrated by the following examples:

Example (1). If a corporation changes from a calendar year to a fiscal year beginning November 1, 1956, and ending October 31, 1957, a declaration is required on or before September 15, 1956, for the short taxable year January 1, 1956, to October 31, 1956, if such corporation otherwise meets the requirements of section 6016(a) on or before August 31, 1956. In such case the first installment of the estimated tax must be paid with the declaration filed on September 15, 1956. The second installment must be paid on or before October 15, 1956, the 15th day of the last month of the short taxable year.

Example (2). If, in the first example, the corporation did not meet the requirements of section 6016(a) until after August 31, 1956, but before October 1, 1956, the declaration would have been due on October 15, 1956. In such case the amount of the estimated tax required to be paid must be paid in full with the declaration filed on October 15, 1956.

(b) *Taxable years beginning after December 31, 1963*—(1) *In general.* In the case of a short taxable year which begins after December 31, 1963, and in respect of which a declaration of estimated tax is required to be filed (see paragraph (b) of § 1.6074–2), the amount of, and time for payment of, each installment of estimated tax shall be determined by paragraphs (1) to (4), inclusive, of section 6154(a), except that in the case of a short taxable year ending after November 30, 1964, any estimated tax payable in installments which is not paid before the 15th day of the last month of the short taxable year (whether or not the date otherwise specified in section 6154(a) for payment has arrived) shall be paid on such 15th day of the last month of the short taxable year.

(2) *Examples.* The application of the provisions of subparagraph (1) of this paragraph may be illustrated by the following examples:

Example (1). X, a corporation filing on a calendar year basis, changes to a fiscal year beginning September 1, 1965, and ending August 31, 1966, and is required to file a declaration on or before April 15, 1965, for the short taxable year January 1, 1965, to August 31, 1965. X must make two 4 percent installment payments of the estimated tax, the first on or before April 15, 1965, and the second on or before June 15, 1965, and must pay 50 percent (25 percent for the 3d installment plus 25 percent for the 4th installment) of the estimated tax on or before August 15, 1965 (the 15th day of the last month of the short taxable year), as the last installment.

Example (2). If, in the first example, X does not meet the requirements of section 6016(a) until June 15, 1965, the declaration is due on or before August 15, 1965. X is required to pay 58 percent of the estimated tax on or before August 15, 1965 (the 15th day of the last month of the short taxable year).

(3) *Late filing of declaration of estimated tax.* In the case of a declaration

of estimated tax for a short taxable year beginning after December 31, 1963, filed after the date prescribed by section 6074(a) (determined without regard to any extension of time for filing the declaration under section 6081), the provisions of paragraph (b)(1)(iii) of § 1.6154–1 shall be applied in determining the amount of and time for payment of each installment. However, in the case of short taxable years beginning after December 31, 1963, and ending after November 30, 1964, where, under the provisions of paragraph (b)(1)(iii) of § 1.6154–1, installments are to be paid after the close of the short taxable year, such installments shall be paid on or before the 15th day of the last month of the short taxable year.

(4) *Amended declarations.* In the case of an amended declaration of estimated tax for a short taxable year beginning after December 31, 1963, filed in accordance with section 6074(b), the provisions of paragraph (b)(2) of § 1.6154–1 shall apply to determine the amount of each remaining installment. However, where, under the provisions of such paragraph (b)(2), installments are to be paid after the close of the short taxable year, such installments shall be paid on or before the 15th day of the last month of the short taxable year.

[T.D. 6768, 29 FR 14925, Nov. 4, 1964]

§ 1.6154–3 Extension of time for paying estimated tax.

An extension of time granted a corporation under section 6081 for filing the declaration of estimated tax automatically extends the time for paying the estimated tax (without interest) for the same period. See § 1.6074–3 for rules relating to extensions of time for filing declarations of estimated tax by corporations. Except as provided in paragraph (b) of § 301.6091–1 (relating to hand-carried documents), an application for an extension of time for paying an installment of the estimated tax shall be addressed to the internal revenue officer with whom the taxpayer files its declaration. Each application must contain a full recital of the causes for the delay. Any such extension will not relieve the taxpayer from the addition to the tax imposed by section 6655, and the period of the underpayment will be determined under section 6655(c) without regard to such extension.

[T.D. 6950, 33 FR 5357, Apr. 4, 1968]

§ 1.6154–4 Use of Government depositaries.

For provisions relating to the use of Federal Reserve banks and authorized financial institutions in depositing the taxes see § 1.6302–1.

(Approved by the Office of Management and Budget under control number 1545–0257)

[T.D. 6914, 32 FR 3819, Mar. 8, 1967, as amended by T.D. 7953, 49 FR 19644, May 9, 1984]

§ 1.6154–5 Definition of estimated tax.

For taxable years beginning after December 31, 1976, the term *estimated tax* means the excess of—

(a) The amount which the corporation estimates as its income tax liability for the taxable year under section 11 or 1201(a), or subchapter L of chapter 1 of the Code, whichever is applicable, over

(b) The sum of—

(1) Any estimated credits against tax provided by part IV of subchapter A of chapter 1 of the Code, plus

(2) For taxable years ending after February 29, 1980, the amount which the corporation estimates will be the amount of such corporation's overpayment of windfall profit tax imposed by section 4986 of the Code for the taxable year. For this purpose, the amount of such overpayment is the amount by which such corporation's aggregate windfall profit tax liability for the taxable year as a producer of crude oil is reasonably expected to be exceeded by withholding of windfall profit tax for the taxable year.

(Secs. 6015, 6154, 6654, 6655, and 7805, Internal Revenue Code of 1954 (96 Stat. 2395 and 2396, 68A Stat. 917; 26 U.S.C. 6015, 6154, 6654, 6655, and 7805))

[T.D. 8016, 50 FR 11855, Mar. 26, 1985]

EXTENSIONS OF TIME FOR PAYMENT

SOURCE: Sections 1.6161–1 to 1.6165–1 contained in T.D. 6500, 25 FR 12140, Nov. 26, 1960, unless otherwise noted.

§ 1.6161–1 Extension of time for paying tax or deficiency.

(a) *In general*—(1) *Tax shown or required to be shown on return.* A reasonable extension of the time for payment of the amount of any tax imposed by subtitle A of the Code and shown or required to be shown on any return, or for payment of the amount of any installment of such tax, may be granted by the district directors (including the Director of International Operations) at the request of the taxpayer. The period of such extension shall not be in excess of six months from the date fixed for payment of such tax or installment, except that if the taxpayer is abroad the period of the extension may be in excess of six months.

(2) *Deficiency.* The time for payment of any amount determined as a deficiency in respect of tax imposed by chapter 1 of the Code, or for the payment of any part thereof, may, at the request of the taxpayer, be extended by the internal revenue officer to whom the tax is required to be paid for a period not to exceed 18 months from the date fixed for payment of the deficiency, as shown on the notice and demand, and, in exceptional cases, for a further period not in excess of 12 months. No extension of the time for payment of a deficiency shall be granted if the deficiency is due to negligence, to intentional disregard of rules and regulations, or to fraud with intent to evade tax.

(b) *Undue hardship required for extension.* An extension of the time for payment shall be granted only upon a satisfactory showing that payment on the due date of the amount with respect to which the extension is desired will result in an undue hardship. The extension will not be granted upon a general statement of hardship. The term ''undue hardship'' means more than an inconvenience to the taxpayer. It must appear that substantial financial loss, for example, loss due to the sale of property at a sacrifice price, will result to the taxpayer for making payment on the due date of the amount with respect to which the extension is desired. If a market exists, the sale of property at the current market price is not ordinarily considered as resulting in an undue hardship.

(c) *Application for extension.* An application for an extension of the time for payment of the tax shown or required to be shown on any return, or for the payment of any installment thereof, or for the payment of any amount determined as a deficiency shall be made on Form 1127 and shall be accompanied by evidence showing the undue hardship that would result to the taxpayer if the extension were refused. Such application shall also be accompanied by a statement of the assets and liabilities of the taxpayer and an itemized statement showing all receipts and disbursements for each of the 3 months immediately preceding the due date of the amount to which the application relates. The application, with supporting documents, must be filed on or before the date prescribed for payment of the amount with respect to which the extension is desired. If the tax is required to be paid to the Director of International Operations, such application must be filed with him, otherwise, the application must be filed with the applicable district director referred to in paragraph (a) or (b) of § 1.6091–2, regardless of whether the return is to be filed with, or tax is to be paid to, such district director. The application will be examined, and within 30 days, if possible, will be denied, granted, or tentatively granted subject to certain conditions of which the taxpayer will be notified. If an additional extension is desired, the request therefor must be made on or before the expiration of the period for which the prior extension is granted.

(d) *Payment pursuant to extension.* If an extension of time for payment is granted, the amount the time for payment of which is so extended shall be paid on or before the expiration of the period of the extension without the necessity of notice and demand. The granting of an extension of the time for payment of the tax or deficiency does not relieve the taxpayer from liability for the payment of interest thereon during the period of the extension. See section 6601 and § 301.6601–1 of this chapter (Regulations on Procedure and Administration). Further, the granting of an extension of the time for payment of one installment of the tax does

not extend the time for payment of subsequent installments.

(e) *Cross reference.* For extensions of time for payment of estimated tax, see §§ 1.6073–4 and 1.6074–3.

[T.D. 6500, 25 FR 12140, Nov. 26, 1960, as amended by T.D. 6950, 33 FR 5357, Apr. 4, 1968; T.D. 7260, 38 FR 4259, Feb. 12, 1973]

§ 1.6162–1 Extension of time for payment of tax on gain attributable to liquidation of personal holding companies.

(a) *In general.* (1) If it is shown to the satisfaction of the district director that undue hardship to the taxpayer will result from the payment of such portion of the amount determined as the tax under chapter 1 of the Code by the taxpayer as is attributable to the short-term or long-term capital gain derived by the taxpayer from the receipt by him of property other than money on a complete liquidation of a corporation to which section 331(a)(1) or 342 applies, the district director may grant an extension of time for the payment of such portion of the tax. For the meaning of the term ''undue hardship'', see paragraph (b) of § 1.6161–1.

(2) The extension of time for payment shall be for a period not in excess of five years. The extension shall only be granted for a taxable year beginning before January 1, 1956, and shall apply only if the corporation, for its taxable year preceding the year in which occurred the complete liquidation (or the first of the series of distributions in complete liquidation), was, under the law applicable to such taxable year, a personal holding company or a foreign personal holding company.

(b) *Requirement of bond.* As a condition to the granting of an extension of time for payment, the taxpayer will usually be required by the district director to furnish a bond as provided in section 6165 and the regulations thereunder. For other provisions with respect to bonds, see section 7101 and the regulations in part 301 of this chapter (Regulations on Procedure and Administration).

§ 1.6164–1 Extensions of time for payment of taxes by corporations expecting carrybacks.

(a) *In general.* If a corporation in any taxable year files a statement with respect to an expected net operating loss carryback from such taxable year, such corporation may extend the time for the payment of all or part of any tax imposed by subtitle A of the Code for the taxable year immediately preceding such taxable year to the extent and subject to the limitations provided in section 6164. A corporation may extend the time for payment with respect to only such taxes as meet the following requirements:

(1) The tax must be one imposed by subtitle A of the Code;

(2) The tax must be for the taxable year immediately preceding the taxable year of the expected net operating loss;

(3) The tax must be shown on the return or must be assessed within the taxable year of the expected net operating loss; and

(4) The tax must not have been paid or required to have been paid prior to the filing of the statement.

(b) *Statement for purpose of extending time for payment.* (1) The time for payment of the tax is automatically extended upon the filing of a statement on Form 1138 by the corporation with the district director for the district where the tax is payable. The statement on Form 1138 must be filled out in accordance with the instructions accompanying the form, and all information required by the form and the instructions must be furnished by the taxpayer. The district director, upon request, will furnish a receipt for any statement filed. Such receipt will show the date the statement was filed.

(2) The period of extension is that provided in section 6164(d) and § 1.6164–5 unless sooner terminated by action of either the district director or the corporation.

§ 1.6164–2 Amount of tax the time for payment of which may be extended.

(a) *Total amount to which extension may relate.* The total amount of tax the

time for payment of which may be extended under section 6164 may not exceed the amount of the reduction of the taxes previously determined attributable to the expected carryback.

(b) *Amount of tax to which extension may relate.* (1) The taxpayer shall specify on Form 1138 the kind of tax and the amount thereof the time for payment of which is to be extended. The amount of tax to which an extension may relate shall not exceed the amount of such tax shown on the return as filed, increased by any amount assessed as a deficiency (or as interest or addition to the tax) prior to the date of filing the statement and decreased by any amount paid or required to be paid prior to such date. In determining the amount of tax required to be paid prior to the date of filing the statement, only the following amounts shall be taken into consideration:

(i) The amount of the tax shown on the return as filed; and

(ii) Any amount assessed as a deficiency (or as interest or addition to the tax) if the tenth day after notice and demand for its payment occurs prior to the date of the filing of the statement.

(2) Delinquent installments are to be considered amounts required to be paid prior to the date of filing the statement. In the case of any authorized extension of time under sections 6161 and 6162, the amount of tax the time for payment of which is so extended is not to be considered required to be paid prior to the end of such extension. Similarly, any amount assessed as a deficiency (or as interest or addition to the tax) is not to be considered required to be paid prior to the date of the filing of the statement unless the tenth day after notice and demand for its payment falls prior to the date of the filing of the statement.

(3) The taxpayer may choose to extend the time for payment of all of one or more taxes, or it may choose to extend the time for payment of portions of several taxes. The taxes chosen by the taxpayer need not be those taxes which are affected by the carryback.

§ 1.6164–3 Computation of the amount of reduction of the tax previously determined.

(a) *Tax previously determined.* The taxpayer is to determine the amount of the reduction, attributable to the expected carryback, in the aggregate of the taxes previously determined for taxable years prior to the taxable year of the expected net operating loss. The tax previously determined is to be ascertained in accordance with the method prescribed in section 1314(a). Thus, the tax previously determined will be the tax shown on the return as filed, increased by any amounts assessed (or collected without assessment) as deficiencies prior to the date of the filing of the statement, and decreased by any amounts abated, credited, refunded, or otherwise repaid prior to such date. Any items as to which the Internal Revenue Service and the taxpayer are in disagreement at the time of the filing of the statement shall be taken into account in ascertaining the tax previously determined only if, and to the extent that, they were reported in the return, or were reflected in any amounts assessed (or collected without assessment) as deficiencies, or in any amounts abated, credited, refunded, or otherwise repaid, prior to the date of the filing of the statement. The tax previously determined will reflect the foreign tax credit and the credit for tax withheld at source provided in section 32.

(b) *Reduction attributable to the expected carryback.* The reduction, attributable to the expected carryback or related adjustments, in any tax previously determined is to be ascertained by applying the expected carryback as if it were a determined net operating loss carryback, in accordance with the provisions of section 172 and the regulations thereunder. Items must be taken into account only to the extent that such items were included in the return, or were reflected in amounts assessed (or collected without assessment) as deficiencies, or in amounts abated, credited, refunded, or otherwise repaid, prior to the date of the filing of the statement. Thus, for example, if

the taxpayer claims a deduction for depreciation of $10,000 in its return and the Internal Revenue Service asserts that only $4,000 is properly deductible, no change is to be made in the $10,000 depreciation deduction as shown by the taxpayer on his return unless a deficiency has been assessed, or an amount collected without assessment, prior to the date of filing of the statement as a result of a change in the depreciation deduction, or unless such change in the depreciation deduction was reflected in an amount abated, credited, refunded, or otherwise repaid prior to such date.

[T.D. 6500, 25 FR 12140, Nov. 26, 1960, as amended by T.D. 6862, 30 FR 14432, Nov. 18, 1965]

§ 1.6164–4 Payment of remainder of tax where extension relates to only part of the tax.

(a) *Time for payment.* If an extension of time relates to only part of the tax, the time for payment of the remainder of the tax shall be considered to be the dates on which payments would have been required if such remainder had been the tax and the taxpayer had elected to pay the tax in installments as provided in section 6152(a).

(b) *Example.* The provisions of this section may be illustrated by the following example:

Example. Corporation X, which keeps its books and makes its tax returns on the calendar year basis, filed its income tax return for 1956 on March 15, 1957. The corporation showed a tax of $1,000 on its return and paid 50 percent of such tax, or $500 on March 15, 1957. On June 3, 1957, Corporation X, pursuant to the provisions of section 6164, extended the time for payment of $400 of such tax. The remainder of the tax the time for payment of which was not so extended, i.e., $600, is to be considered the tax for purposes of determining when it is to be paid. The remainder is considered to be due on the dates on which payment would have been required if such remainder had been the tax. Since the taxable year ended on December 31, 1956, the tax is payable in two equal installments of $300 each on March 15, 1957, and June 17, 1957. The taxpayer, having paid $500 on March 15, 1957, will have $100 to pay on June 17, 1957.

§ 1.6164–5 Period of extension.

If the time for the payment of any tax has been extended pursuant to section 6164, such extension shall expire:

(a) On the last day of the month in which falls the last date prescribed by law (including any extension of time granted the taxpayer) for the filing of the return for the taxable year of the expected net operating loss; or

(b) If an application for a tentative carryback adjustment provided in section 6411 with respect to such loss is filed before the expiration of the period specified in paragraph (a) of this section, on the date on which notice is mailed by registered mail prior to September 3, 1958, and by either registered or certified mail on and after September 3, 1958, to the taxpayer that such application is allowed or disallowed in whole or in part.

§ 1.6164–6 Revised statements.

(a) *Requirements and effect.* A corporation may file more than one statement under section 6164 with respect to any one taxable year. Each statement is to be considered a new statement and not an amendment of any prior statement. Each such new statement is to be in lieu of the last statement previously filed with respect to the taxable year. The new statement may extend the time for payment of a greater or lesser amount of tax than was extended under the prior statement or may change the kind of tax the time for payment of which is to be extended. The extension may not relate to any amount of tax which was paid or required to be paid prior to the date of filing the new statement. Any amount of tax the time for payment of which was extended under a prior statement, however, may continue to be extended under the new statement. If the amount the time for payment of which is extended under the new statement is less than the amount so extended under the last statement previously filed, the extension of time shall be terminated on the date the new statement is filed as to the difference between the two amounts. See § 1.6164–8 for the dates on which such difference must be paid. If a corporation pays any amount of tax, the time for payment of which was extended, prior to the date the extension would otherwise terminate, the extension with respect to such amount shall be deemed terminated, without regard to whether a new statement is filed, on

the date such amount is paid. The corporation shall indicate on each new statement filed that it has already filed one or more prior statements with respect to the taxable year. The corporation shall likewise indicate the date each prior statement was filed and the amount of each tax the time for payment of which was extended under each prior statement.

(b) *Example*. The provisions of this section may be illustrated by the following example:

Example. Corporation Y, which keeps its books and makes its tax returns on the calendar year basis, filed its income tax return for 1956 on March 15, 1957, showing a tax of $100,000. At the same time it filed a statement under section 6164 in which it stated that it expected to have a net operating loss of $75,000 in 1957 and that the reduction in the tax previously determined for 1955 (the second taxable year preceding the year of the expected net operating loss) attributable to the expected net operating loss carryback resulting from such expected loss, would be $39,000. The corporation accordingly extended the time for payment of $39,000 of its income tax for 1956, and paid $30,500 (50 percent of the excess of $100,000 over $39,000) of such tax on March 15, 1957 (see section 6164(c) and § 1.6164–4). As a result of its operations during the next several months, the corporation filed a second statement on June 3, 1957, in which it stated that its expected net operating loss for 1957 would amount to $150,000 and that the corresponding reduction in the tax for 1955 would amount to $78,000. Corporation Y under the new statement may extend the time for payment of $30,500, the installment due on June 17, 1957, and the time for payment of the $39,000 extended under the first statement filed on March 15, 1957, may continue to be extended under the second statement. The $30,500 which was paid on March 15, 1957, will not be affected by the second statement filed on June 3, 1957.

§ 1.6164–7 Termination by district director.

(a) *After an examination of the statement filed by the corporation is made*. The district director is authorized to make such examination of the statements filed as he deems necessary and practicable. If, upon such examination as he may make, the district director believes that, as of the time he makes the examination, all or any part of the statement is in a material respect erroneous or unreasonable, he will terminate the extension as to any part of the amount to which such extension relates which he deems should be terminated.

(b) *Jeopardy*. If the district director believes that the collection of any amount to which an extension under section 6164 relates is in jeopardy, he will immediately terminate the extension. In the case of such a termination, notice and demand shall be made by the district director for payment of such amount, and there may be no further extension of time under section 6164 with respect to such amount.

§ 1.6164–8 Payments on termination.

(a) *In general*. If an extension of time under section 6164 is terminated with respect to any amount either (1) by the filing of a new statement by the taxpayer under section 6164(e) extending the time for payment of a lesser amount than was extended in a prior statement, or (2) by action of the district director under section 6164(f) after making an examination of the statement filed by the corporation, no further extension of time may be made under section 6164 with respect to such amount. The time for payment of such amount shall be the dates on which payments would have been required if there had been no extension with respect to such amount and the taxpayer had elected under section 6152(a) to pay the tax in installments.

(b) *Example*. The provisions of this section may be illustrated by the following example:

Example. Corporation Z, which keeps its books and makes its tax returns on the calendar year basis, filed its income tax return for 1956 on March 15, 1957, showing a tax of $100,000. At the same time it filed a statement under section 6164 extending the time for payment of the entire $100,000 on the basis of an expected net operating loss carryback from 1957. On April 10, 1957, the corporation filed a new statement indicating that the reduction, attributable to the carryback from 1957, in its income tax for 1956, would only be $80,000, and thus terminated the above extension of $20,000. The time for payment of such $20,000 may not be extended again, and such $20,000 is payable as if it were the tax for 1956 and Corporation Z had elected to pay such tax in installments. That is, $10,000 is payable on March 15, 1957, and $10,000 payable on June 17, 1957. Inasmuch as the March 15 date had already passed when the Corporation Z terminated

the extension with respect to the $20,000, $10,000 is payable immediately upon such termination, and the other installment of $10,000 is payable on June 17, 1957. This example would also apply if the extension of time for payment of the $20,000 were terminated instead by the district director on April 10, 1957.

§ 1.6164–9 Cross references.

For provisions with respect to interest due on amounts the payment of which is extended under section 6164, see section 6601 and paragraph (e) of § 301.6601–1 of this chapter (Regulations on Procedure and Administration). For extensions of time under section 6164 in the case of corporations making or required to make consolidated returns, see § 1. 1502–77(a).

[T.D. 6500, 25 FR 12140, Nov. 26, 1960, as amended by T.D. 7244, 37 FR 28897, Dec. 30, 1972]

§ 1.6165–1 Bonds where time to pay the tax or deficiency has been extended.

The district director, including the Director of International Operations, may, as a condition to the granting of an extension of time within which to pay any tax or any deficiency therein, require the taxpayer to furnish a bond in an amount not exceeding double the amount of the tax with respect to which the extension is granted. Such bond shall be furnished in accordance with the provisions contained in section 7101 and the regulations in part 301 of this chapter (Regulations on Procedure and Administration).

COLLECTION

GENERAL PROVISIONS

§ 1.6302–1 Use of Government depositaries in connection with corporation income and estimated income taxes and certain taxes of tax-exempt organizations.

(a) *Requirement*. A corporation (and, for taxable years beginning after December 31, 1986, any organization subject to the tax imposed by section 511, and any private foundation subject to the tax imposed by section 4940) shall deposit with an authorized depositary of Federal taxes all payments of tax imposed by chapter 1 of the Code (or treated as so imposed by section 6154 (h)), including any payments of estimated tax, on or before the date otherwise prescribed for paying such tax. This paragraph does not apply to a foreign corporation or entity which has no office or place of business in the United States.

(b) *Manner of deposit*—(1) *Deposit by Federal tax deposit coupon*. A deposit required to be made by this section shall be made separately from a deposit required by any other section. A corporation may make one, or more than one, remittance of the amount required by this section to be deposited. Each remittance shall be accompanied by a Federal Tax Deposit form which shall be prepared in accordance with the instructions applicable thereto. The remittance, together with the Federal Tax Deposit form, shall be forwarded to a financial institution authorized as a depositary for Federal taxes in accordance with 31 CFR part 214 or, at the election of the corporation, to a Federal Reserve bank. For procedures governing the deposit of Federal taxes at a Federal Reserve bank, see 31 CFR part 214.7. The timeliness of the deposit will be determined by the date stamped on the Federal Tax Deposit form by the Federal Reserve bank or the authorized financial institution or, if section 7502(e) applies, by the date the deposit is treated as received under section 7502(e). Each corporation making deposits under this section shall report on the return, for the period with respect to which such deposits are made, information regarding such deposits according to the instructions that apply to such return. Amounts deposited under this section shall be considered as payment of the tax.

(2) *Deposits by electronic funds transfer*. For the requirement to deposit corporation income and estimated income taxes and certain taxes of tax-exempt organizations by electronic funds transfer, see § 31.6302–1(h) of this chapter. A taxpayer not required to deposit by electronic funds transfer pursuant to § 31.6302–1(h) of this chapter remains subject to the rules of paragraph (b)(1) of this section.

(c) *Procurement of the prescribed forms*. Copies of the Federal Tax Deposit form

will so far as possible be furnished corporations. A corporation will not be excused from making a deposit, however, by the fact that no form has been furnished to it. Corporations not supplied with the proper form should make application therefor to the district director (or director of a service center) in ample time to make the required deposits within the time prescribed. The corporation may secure the form or additional forms by applying therefor and supplying the district director or director of a service center with its name, identification number, address and the taxable year to which the deposits will relate.

(d) *Failure to deposit.* For provisions relating to the penalty for failure to make a deposit within the prescribed time, see the provisions of § 301.6656–1 of this chapter (Regulations on Procedure and Administration).

[T.D. 6914, 32 FR 3820, Mar. 8, 1967, as amended by T.D. 6941, 32 FR 18040, Dec. 16, 1967; T.D. 7293, 38 FR 32804, Nov. 28, 1973; T.D. 7953, 49 FR 19644, May 9, 1984; T.D. 8157, 52 FR 33809, Sept. 9, 1987; T.D. 8723, 62 FR 37492, July 14, 1997]

§ 1.6302–2 Use of Government depositaries for payment of tax withheld on nonresident aliens and foreign corporations.

(a) *Time for making deposits*—(1) *Deposits for 1973 and subsequent years*—(i) *Monthly deposits.* Except as provided in subdivisions (ii) and (iv) of this subparagraph, every withholding agent who, pursuant to chapter 3 of the Code, has accumulated at the close of any calendar month beginning on or after January 1, 1973, an aggregate amount of undeposited taxes of $200 or more shall deposit such aggregate amount with a Federal Reserve bank or authorized financial institution (see paragraph (b)(1)(ii) of this section) within 15 days after the close of such calendar month. However, the preceding sentence shall not apply if the withholding agent has made a deposit of taxes pursuant to subdivision (ii) of this subparagraph with respect to a quarter-monthly period which occurred during such month.

(ii) *Quarter-monthly deposits.* If at the close of any quarter-monthly period within a calendar month beginning on or after January 1, 1973, the aggregate amount of undeposited taxes required to be withheld pursuant to chapter 3 of the Code is $2,000 or more, the withholding agent shall deposit such aggregate amount in a Federal Reserve bank or authorized financial institution within 3 banking days after the close of such quarter-monthly period. For purposes of determining the amount of undeposited taxes at the close of a quarter-monthly period, undeposited taxes withheld with respect to items paid during a prior quarter-monthly period shall not be taken into account if the withholding agent made a deposit with respect to such prior quarter-monthly period. A withholding agent will be considered to have complied with the requirements of this subdivision with respect to the close of a quarter-monthly period if:

(a) His deposit is not less than 90 percent of the aggregate amount of the taxes required to be withheld during the period for which the deposit is made, and

(b) If such quarter-monthly period occurs in a month other than December, he deposits any underpayment with his first deposit which is otherwise required by this subparagraph to be made after the 15th day of the following month. Any underpayment of $200 or more for a quarter-monthly period closing during December must be deposited on or before the following January 31.

For purposes of this subparagraph, the term ''quarter-monthly period'' means the first 7 days of a calendar month, the 8th day through the 15th day of a calendar month, the 16th day through the 22d day of a calendar month, or the portion of a calendar month following the 22d day of such month.

(iii) *Excess deposits.* The excess (if any) of a deposit over the actual taxes for a monthly or quarter-monthly deposit period shall be applied in order of time to each of the withholding agent's succeeding deposits with respect to the same calendar year, until exhausted, to the extent that the amount by which the taxes for a subsequent deposit period exceed the deposit for such subsequent deposit period.

(iv) *Annual deposits.* If at the close of the month of December of each calendar year beginning on or after January 1, 1973, the aggregate amount of undeposited taxes required to be withheld pursuant to chapter 3 of the Code is less than $200, the withholding agent may deposit such aggregate amount in a Federal Reserve bank or authorized financial institution on or before March 15 of the following calendar year. If such aggregate amount is not so deposited, it shall be remitted in accordance with paragraph (a)(2) of § 1.1461–3.

(2) *Cross reference.* For rules relating to the adjustment of deposits, see § 1.1461–4(b) and § 1.6414–1. For rules requiring payment of any undeposited tax, see § 1.1461–3.

(b) *Deposits by Federal tax deposit coupon*—(1) *Remittances.* Each remittance of amounts required to be deposited by paragraph (a) of this section shall be accompanied by a Federal Tax Deposit form which shall be prepared in accordance with the instructions applicable thereto. The remittance, together with the Federal Tax Deposit form, shall be forwarded to a financial institution authorized as a depositary for Federal taxes in accordance with 31 CFR part 214 or, at the election of the withholding agent, to a Federal Reserve bank. For procedures governing the deposit of Federal taxes at a Federal Reserve bank, see 31 CFR 214.7. The timeliness of the deposit will be determined by the date stamped on the Federal Tax Deposit form by the Federal Reserve bank or the authorized financial institution or, if section 7502(e) applies, by the date the deposit is treated as received under section 7502(e). Each withholding agent making deposits under this section shall report on the return, for the period with respect to which such deposits are made, information regarding such deposits according to the instructions that apply to such return.

(2) *Voluntary deposits.* An amount of tax which is not required to be deposited may nevertheless be deposited if the withholding agent so desires.

(3) *Separation of deposits.* A deposit required by paragraph (a) of this section for any period occurring in one calendar year shall be made separately from any deposit for any period occurring in another calendar year. In addition, a deposit required to be made by paragraph (a) of this section shall be made separately from a deposit required by any other section.

(4) *Multiple remittances.* A withholding agent may make one, or more than one, remittance of the amount required to be deposited if each remittance is accompanied by the applicable deposit form.

(5) *Time deemed paid.* In general amounts deposited under this section shall be considered as paid on the last day prescribed for filing the return (Form 1042) in respect of such tax (determined without regard to any extension of time for filing such return), or at the time deposited, whichever is later. For purposes of section 6511 and the regulations thereunder, relating to period of limitation on credit or refund, if an amount is so deposited prior to April 15th of a calendar year immediately succeeding the calendar year in which occurs the period for which such amount was so deposited, such amount shall be considered as paid on such April 15th.

(6) *Procurement of Federal Tax Deposit form.* Copies of the Federal Tax Deposit form will so far as possible be furnished withholding agents. A withholding agent will not be excused from making a deposit, however, by the fact that no form has been furnished to it. A withholding agent not supplied with the form should make application therefor in ample time to make the required deposits within the time prescribed. The withholding agent may secure the form or additional forms by applying therefor and supplying its name, identification number, address, and the taxable period to which the deposit will relate. Copies of the Federal Tax Deposit form may be secured by application therefor to the district director or director of a service center.

(c) *Deposits by electronic funds transfer.* For the requirement to deposit taxes withheld on nonresident aliens and foreign corporations by electronic funds transfer, see § 31.6302–1(h) of this chapter. A taxpayer not required to deposit by electronic funds transfer pursuant to § 31.6302–1(h) of this chapter remains subject to the rules of paragraph (b) of this section.

(d) *Penalties for failure to make deposits.* For provisions relating to the penalty for failure to make a deposit within the time prescribed by this section, see § 301.6656–1 of this chapter (Procedure and Administration Regulations).

(e) *Saturday, Sunday, or legal holidays.* For provisions relating to the time for performance of acts where the last day falls on Saturday, Sunday, or a legal holiday, see § 301.7503–1 of this chapter (Procedure and Administration Regulations).

(f) *Employer identification number.* For the definition of the term ''employer identification number'', see § 301.7701–12 of this chapter (Procedure and Administration Regulations). For provisions relating to the penalty for failure to include the employer identification number in a return, statement, or other document, see § 301.6676–1 of such chapter.

(g) *Effective date.* Except as otherwise provided, this section shall apply to tax required to be withheld under chapter 3 of the Code after 1966.

[T.D. 6922, 32 FR 8713, June 17, 1967, as amended by T.D. 6941, 32 FR 18040, Dec. 16, 1967; T.D. 7243, 38 FR 22, Jan. 3, 1973; T.D. 7953, 49 FR 19644, May 9, 1984; T.D. 8723, 62 FR 37492, July 14, 1997]

§ 1.6302–3 Use of Government depositaries in connection with estimated taxes of certain trusts.

(a) *Requirement.* A bank or other financial institution described in paragraph (b) of this section shall deposit in its Treasury Tax & Loan account 0described in 31 CFR 203 or with a Federal Reserve Bank all payments of estimated tax required to be paid on or after September 15, 1988, under section 6654(l) with respect to trusts for which such institution acts as a fiduciary on or before the date otherwise prescribed for paying such tax.

(b) *Banks and financial institutions subject to this requirement.* The requirement of paragraph (a) of this section applies to banks and other financial institutions described in sections 581 and 591 that have been designated as authorized Federal tax depositaries described in section 6302(c) and that act as fiduciaries for at least 200 trusts to which section 6654(l) applies that during the calendar year are required to make installment payments of estimated tax with respect to such trusts. For purposes of this section, a fiduciary is the person responsible for filing the tax returns and paying the taxes with respect to a trust.

(c) *Cross-references.* For further guidance and instructions for certain banks and financial institutions acting as fiduciaries with respect to taxable trusts, see Rev. Proc. 89–49 (1989–2 C.B. 615), (see § 601.601(d)(2) of this chapter) or any successor revenue procedure. For the requirement to deposit estimated tax payments of taxable trusts by electronic funds transfer, see § 31.6302–1(h) of this chapter.

[T.D. 8192, 53 FR 12008, Apr. 12, 1988; T.D. 8192, 53 FR 13464, Apr. 25, 1988, as amended by T.D. 8723, 62 FR 37492, July 14, 1997]

§ 1.6302–4 Use of financial institutions in connection with income taxes; voluntary payments by electronic funds transfer.

Any person may voluntarily remit by electronic funds transfer any payment of tax imposed by subtitle A of the Internal Revenue Code, including any payment of estimated tax. Such payment must be made in accordance with procedures prescribed by the Commissioner.

[T.D. 8828, 64 FR 37676, July 13, 1999]

§ 1.6361–1 Collection and administration of qualified State individual income taxes.

Except as otherwise provided in §§ 301.6361–1 to 301.6365–2, inclusive, of this chapter (Regulations on Procedure and Administration), the provisions of this part under subtitle F of the Internal Revenue Code of 1954 relating to the collection and administration of the taxes imposed by chapter 1 of such Code on the incomes of individuals (or relating to civil or criminal sanctions with respect to such collection and administration) shall apply to the collection and administration of qualified State individual income taxes (as defined in section 6362 of such Code and the regulations thereunder) as if such taxes were imposed by chapter 1.

[T.D. 7577, 43 FR 59358, Dec. 20, 1978]

ABATEMENTS, CREDITS, AND REFUNDS

§ 1.6411–1 Tentative carryback adjustments.

(a) *In general.* Any taypayer who has a net operating loss under section 172, a net capital loss under section 1211(a) which is a carryback under section 1212, an unused investment credit under section 46, or an unused work incentive program (WIN) credit under section 50A, may file an application under section 6411 for a tentative carryback adjustment of the taxes for taxable years prior to the taxable year of the net operating or capital loss or the unused credit, whichever is applicable, which are affected by the net operating loss carryback, the capital loss carryback, the unused investment credit carryback, or the unused WIN credit carryback, resulting from such loss or unused credit. The regulations under section 6411 shall apply with respect to investment credit carrybacks for taxable years ending after December 31, 1961, but only with respect to applications for tentative carryback adjustments for investment credit carrybacks filed after November 2, 1966. The regulations under section 6411 shall apply with respect to WIN credit carrybacks for taxable years beginning after December 31, 1971. The right to file an application for a tentative carryback adjustment is not limited to corporations, but is available to any taxpayer otherwise entitled to carryback a loss or unused credit. A corporation may file an application for a tentative carryback adjustment even though it has not extended the time for payment of tax under section 6164. In determining any decrease in tax under §§ 1.6411–1 through 1.6411–4, the decrease in tax is determined net of any increase in the tax imposed by section 56 (relating to the minimum tax for tax preferences).

(b) *Contents of application.* (1) The application for a tentative carryback adjustment shall be filed, in the case of a corporation, on Form 1139, and in the case of taxpayers other than corporations, on Form 1045. The application shall be filled out in accordance with the instructions accompanying the form, and all information required by the form and the instructions must be furnished by the taxpayer.

(2) An application for a tentative carryback adjustment does not constitute a claim for credit or refund. If such application is disallowed by the district director or director of a service center in whole or in part, no suit may be maintained in any court for the recovery of any tax based on such application. The filing of an application for a tentative carryback adjustment will not constitute the filing of a claim for credit or refund within the meaning of section 6511 for purposes of determining whether a claim for credit or refund was filed prior to the expiration of the applicable period of limitation. The taxpayer, however, may file a claim for credit or refund under section 6402 at any time prior to the expiration of the applicable period of limitation, and may maintain a suit based on such claim if it is disallowed or if the district director or director of a service center does not act on the claim within 6 months from the date it is filed. Such claim may be filed before, simultaneously with, or after the filing of the application for a tentative carryback adjustment. A claim for credit or refund under section 6402 filed after the filing of an application for a tentative carryback adjustment is not to be considered an amendment of such application. Such claim, however, in proper cases may constitute an amendment to a prior claim filed under section 6402.

(c) *Time and place for filing application.* Except as otherwise provided in this paragraph the application for a tentative carryback adjustment shall be filed on or after the date of the filing of the return for the taxable year of the net operating loss, net capital loss, unused investment credit, or unused WIN credit and shall be filed within a period of twelve months from the end of such taxable year. With respect to any portion of an investment credit carryback or a WIN credit carryback from a taxable year attributable to a net operating loss carryback or a capital loss carryback from a subsequent taxable year, the twelve-month period shall be measured from the end of such subsequent taxable year. In the case of an application for a tentative carryback adjustment attributable to

the carryback of an unused investment credit, the twelve-month period for filing shall not expire before the close of December 31, 1966. Any application filed prior to the date on which the return for the taxable year of the loss or unused credit is filed shall be considered to have been filed on the date such return is filed. In the case of an application filed before April 15, 1968, the application shall be filed with the internal revenue officer to whom the tax was paid or by whom the assessment was made. Except as provided in paragraph (b) of § 301.6091–1 (relating to hand-carried documents), in the case of an application filed after April 14, 1968, if the tax was paid to the Director of International Operations, the application shall be filed with him; otherwise the application shall be filed with the internal revenue office with which the return was filed.

[T.D. 6500, 25 FR 12144, Nov. 26, 1960, as amended by T.D. 6862, 30 FR 14432, Nov. 18, 1965; T.D. 6950, 33 FR 5357, Apr. 4, 1968; T.D. 7301, 39 FR 973, Jan. 4, 1974; T.D. 7564, 43 FR 40498, Sept. 12, 1978; T.D. 8107, 51 FR 43347, Dec. 2, 1986]

§ 1.6411–2 Computation of tentative carryback adjustment.

(a) *Tax previously determined.* The taxpayer is to determine the amount of decrease, attributable to the carryback, in tax previously determined for each taxable year before the taxable year of the net operating loss, net capital loss, unused investment credit, or unused WIN credit. The tax previously determined is to be ascertained in accordance with the method prescribed in section 1314(a). Thus, the tax previously determined will be the tax shown on the return as filed, increased by any amounts assessed (or collected without assessment) as deficiencies before the date of the filing of the application for a tentative carryback adjustment, and decreased by any amounts abated, credited, refunded, or otherwise repaid prior to such date. Any items as to which the Internal Revenue Service and the taxpayer are in disagreement at the time of the filing of the application shall be taken into account in ascertaining the tax previously determined only if, and to the extent that, they were reported in the return, or were reflected in any amounts assessed (or collected without assessment) as deficiencies, or in any amounts abated, credited, refunded, or otherwise repaid, before the date of filing the application. The tax previously determined, therefore, will reflect the foreign tax credit and the credit for tax withheld at source provided in section 32.

(b) *Decrease attributable to carryback.* The decrease in tax previously determined which is affected by the carryback or any related adjustments, is to be determined, except for such carryback and related adjustments, on the basis of the items which entered into the computation of such tax as previously determined; the tax previously determined being ascertained in the manner described in this section. In determining any such decrease, items shall be taken into account only to the extent that they were reported in the return, or were reflected in amounts assessed (or collected without assessment) as deficiencies, or in amounts abated, credited, refunded, or otherwise repaid, before the date of filing the application for a tentative carryback adjustment. If the Internal Revenue Service and the taxpayer are in disagreement as to the proper treatment of any item, it shall be assumed for purposes of determining the decrease in the tax previously determined that such item was correctly reported by the taxpayer unless, and to the extent that, the disagreement has resulted in the assessment of a deficiency (or the collection of an amount without an assessment), or the allowing or making of an abatement, credit, refund, or other repayment, before the date of filing the application. Thus, if the taxpayer claimed a deduction on its return of $50,000 for salaries paid its officers but the district director asserts that such deduction should not exceed $20,000, and the Internal Revenue Service and the taxpayer have not agreed on the amount properly deductible before the date the application for a tentative carryback adjustment is filed, $50,000 shall be considered as the amount properly deductible for purposes of determining the decrease in tax previously determined in respect of the application for a tentative

carryback adjustment. In determining the decrease in tax previously determined, any items which are affected by the carryback must be adjusted to reflect such carryback. Thus, unless otherwise provided, any deduction limited, for example, by adjusted gross income, such as the deduction for medical, dental, etc., expenses is to be recomputed on the basis of the adjusted gross income as affected by the carryback.

[T.D. 6500, 25 FR 12144, Nov. 26, 1960, as amended by T.D. 7301, 39 FR 973, Jan. 4, 1974]

§ 1.6411–3 Allowance of adjustments.

(a) *Time prescribed*. The district director or director of a service center (either of whom are sometimes hereinafter referred to in this section as internal revenue officer) shall act upon any application for a tentative carryback adjustment filed under section 6411(a) within a period of 90 days from whichever of the following two dates is the later:

(1) The date the application is filed; or

(2) The last day of the month in which falls the last date prescribed by law (including any extension of time granted the taxpayer) for filing the return for the taxable year of the net operating loss, net capital loss, unused investment credit, or unused WIN credit from which the carryback results.

(b) *Examination*. Within the 90-day period described in paragraph (a) of this section, the district director or director of a service center shall make, to the extent he deems practicable in such period, an examination of the application to discover omissions and errors of computation. He shall determine within such period the decrease in tax previously determined, affected by the carryback or any related adjustments, upon the basis of the application and such examination. Such decrease shall be determined in the same manner as that provided in section 1314(a) for the determination by the taxpayer of the decrease in taxes previously determined which must be set forth in the application for a tentative carryback adjustment. Such internal revenue officer, however, may correct any errors of computation or omissions he may discover upon examination of the application. In determining the decrease in tax previously determined which is affected by the carryback or any related adjustment, he accordingly may correct any mathematical error appearing on the application and he may likewise correct any modification required by the law and incorrectly made by the taxpayer in computing the net operating loss, net capital loss, unused investment credit, or unused WIN credit, the resulting carrybacks, or the net operating loss deduction, capital loss deduction, investment credit or WIN credit allowable. If the required modification has not been made by the taxpayer and such internal revenue officer has available the necessary information to make such modification within the 90-day period, he may, in his discretion, make such modification. In determining such decrease, however, such internal revenue officer will not, for example, change the amount claimed on the return as a deduction for depreciation because he believes that the taxpayer has claimed an excessive amount; likewise, he will not include in gross income any amount not so included by the taxpayer, even though such officer believes that such amount is subject to tax and properly should be included in gross income.

(c) *Disallowance in whole or in part*. If the district director or director of a service center finds that an application for a tentative carryback adjustment contains materials omissions or errors of computation, he may disallow such application in whole or in part without further action. If, however, he deems that any error of computation can be corrected by him within the 90-day period, he may do so and allow the application in whole or in part. Such internal revenue officer's determination as to whether he can correct any error of computation within the 90-day period shall be conclusive. Similarly, his action in disallowing, in whole or in part, any application for a tentative carryback adjustment shall be final and may not be challenged in any proceeding. The taxpayer in such case, however, may file a claim for credit or refund under section 6402, and may maintain a suit based on such claim if it is disallowed or if such internal revenue officer does not act upon the

claim within 6 months from the date it is filed.

(d) *Application of decrease.* (1) Each decrease determined by the district director or director of a service center in any previously determined tax which is affected by the carryback or any related adjustments shall first be applied against any unpaid amount of the tax with respect to which such decrease was determined. Such unpaid amount of tax may include one or more of the following:

(i) An amount with respect to which the taxpayer is delinquent;

(ii) An amount the time for payment of which has been extended under section 6164 and which is due and payable on or after the date of the allowance of the decrease; and

(iii) An amount (including an amount the time for payment of which has been extended under section 6162, but not including an amount the time for payment of which has been extended under section 6164) which is due and payable on or after the date of the allowance of the decrease.

(2) In case the unpaid amount of tax includes more than one of such amounts, the district director, or director of a service center in his discretion, shall determine against which amount or amounts, and in what proportion, the decrease is to be applied. In general, however, the decrease will be applied against any amounts described in subparagraph (1) (i), (ii), and (iii) of this paragraph in the order named. If there are several amounts of the type described in subparagraph (1)(iii) of this paragraph, any amount of the decrease which is to be applied against such amount will be applied by assuming that the tax previously determined minus the amount of the decrease to be so applied is ''the tax'' and that the taxpayer had elected to pay such tax in installments. The unpaid amount of tax against which a decrease may be applied under subparagraph (1) of this paragraph may not include any amount of tax for any taxable year other than the year of the decrease. After making such application, such internal revenue officer will credit any remainder of the decrease against any unsatisfied amount of any tax for the taxable year immediately preceding the taxable year of the net operating loss, capital loss, unused investment credit, or unused WIN credit, the time for payment of which has been extended under section 6164.

(3) Any remainder of the decrease after such application and credits may, within the 90-day period, in the discretion of the district director or director of a service center, be credited against any tax or installment thereof then due from the taxpayer, and, if not so credited, shall be refunded to the taxpayer within such 90-day period.

[T.D. 6950, 33 FR 5358, Apr. 4, 1968, as amended by T.D. 7301, 39 FR 973, Jan. 4, 1974]

§ 1.6411–4 Consolidated groups.

For further rules applicable to consolidated groups, see § 1.1502–78. For further rules applicable to consolidated groups that include insolvent financial institutions, see § 301.6402–7 of this chapter.

[T.D. 8446, 57 FR 53034, Nov. 6, 1992]

§ 1.6414–1 Credit or refund of tax withheld on nonresident aliens and foreign corporations.

(a) *In general.* Any withholding agent who for the calendar year pays more than the correct amount of:

(1) Tax required to be withheld under chapter 3 of the Code, or

(2) Interest, addition to the tax, additional amount, or penalty with respect to such tax,

may file a claim for credit or refund of the overpayment in the manner and subject to the conditions stated in the Procedure and Administration Regulations (Part 301 of this chapter) under section 6402, or may claim credit for the overpayment as provided in paragraph (b) of this section.

(b) *Claim for credit on Form 1042.* The withholding agent may claim credit of an overpayment described in paragraph (a) of this section for any calendar year by showing the amount of overpayment on the return on Form 1042 for such calendar year, which shall constitute a claim for credit under this paragraph. The claim for credit shall be evidenced by a statement on the return setting forth the amount determined as an overpayment and showing such other information as may be required by the

instructions relating to the return. The amount so claimed as a credit may be applied, to the extent it has not been applied under paragraph (b) of § 1.1461–4, by the withholding agent to reduce the amount of a payment or deposit of tax required by § 1.1461–3 or paragraph (a) of § 1.6302–2 for any payment period occurring in the calendar year following the calendar year of overwithholding. The amount so claimed as a credit shall also be entered on the annual return on Form 1042 for the calendar year following the calendar year of overwithholding and shall be applied as a payment on account of the tax shown on such form. If the withholding agent files a claim for credit or refund of the overpayment on Form 843 in accordance with § 301.6402–2 of this chapter (Procedure and Administration Regulations), or a claim for refund of the overpayment on Form 1042 in accordance with § 301.6402–3 of such chapter, he may not claim credit for the overpayment under this paragraph.

(c) *Overpayment of amounts actually withheld*. No credit or refund to the withholding agent shall be allowed for the amount of any overpayment of tax which, after taking into account paragraph (b) of § 1.1464–1, the withholding agent has actually withheld from an item of income under chapter 3 of the Code.

[T.D. 6922, 32 FR 8714, June 17, 1967]

§ 1.6425–1 Adjustment of overpayment of estimated income tax by corporation.

(a) *In general*. Any corporation which has made an overpayment of estimated income tax for a taxable year beginning after December 31, 1967, may file an application for an adjustment of such overpayment. The right to file an application for an adjustment of overpayment of estimated income tax is limited to corporations.

(b) *Contents of application*. (1) The application for an adjustment of overpayment of estimated income tax shall be filed on Form 4466. The application shall be filled out in accordance with the instructions accompanying the form, and all information required by the form and instructions must be furnished by the corporation. The application shall be verified in the manner prescribed by section 6065 as in the case of a return of the corporation.

(2) An application for an adjustment of overpayment of estimated income tax does not constitute a claim for credit or refund. If such application is disallowed by the district director, or director of a service center, in whole or in part, no suit may be maintained in any court for the recovery of any tax based on such application. The filing of an application for an adjustment of overpayment of estimated income tax will not constitute the filing of a claim for credit or refund within the meaning of section 6511 for the purpose of determining whether a claim for refund was filed prior to the expiration of the applicable period of limitation. The corporation, however, may file a claim for credit or refund under section 6402 at any time prior to the expiration of the applicable period of limitation and may maintain a suit based on such claim if it is disallowed or if the district director, or director of a service center, does not act on the claim within 6 months from the date it is filed. Such claim may be filed before, simultaneously with, or after the filing of the application for the adjustment of overpayment of estimated tax. A claim for credit or refund under section 6402 filed after the filing of an application for an adjustment of overpayment of estimated income tax is not to be considered an amendment of such application. Such claim, however, in proper cases, may constitute an amendment to a prior claim filed under section 6402.

(c) *Time and place for filing application*. (1) The application for an adjustment of overpayment of estimated income tax shall be filed after the last day of the taxable year and on or before the 15th day of the third month thereafter, or before the date on which the corporation first files its income tax return for such taxable year (whether or not it subsequently amends the return), whichever is earlier.

(2) Except as provided in paragraph (b)(2) of § 301.6091–1 of this chapter (relating to hand-carried documents), the application on Form 4466 shall be filed

with the internal revenue officer designated in instructions applicable to such form.

[T.D. 7059, 35 FR 14546, Sept. 17, 1970]

§ 1.6425–2 Computation of adjustment of overpayment of estimated tax.

(a) *Income tax liability defined.* For purposes of §§ 1.6425–1 through 1.6425–3 and 1.6655–5, relating to excessive adjustment, the term ''income tax liability'' means the excess of:

(1) The tax imposed by section 11 or 1201(a), or subchapter L of chapter 1 of the Code, whichever is applicable, over

(2) The credits against tax provided by part IV of subchapter A of chapter 1 of the code.

(b) *Computation of adjustment.* The amount of an adjustment under section 6425 is an amount equal to the excess of the estimated income tax paid by the corporation during the taxable year over the amount which, at the time of filing Form 4466, the corporation estimates as its income tax liability for the taxable year.

[T.D. 7059, 35 FR 14547, Sept. 17, 1970]

§ 1.6425–3 Allowance of adjustments.

(a) *Limitation.* No application under section 6425 shall be allowed unless the amount of the adjustment is (1) at least 10 percent of the amount which, at the time of filing Form 4466 the corporation estimates as its income tax liability for the taxable year, and (2) at least $500.

(b) *Time prescribed.* The Internal Revenue Service shall act upon an application for an adjustment of overpayment of estimated income tax within a period of 45 days from the date on which such application is filed.

(c) *Examination.* Within the 45-day period described in paragraph (b) of this section, the Internal Revenue Service shall make, to the extent it deems practicable in such period, a limited examination of the application to discover omissions and errors therein. The Service shall calculate the adjustment, which calculation must be set forth in the application for such adjustment, in the manner provided in section 6425(c)(2) for the determination by the corporation of such adjustment. The Service, however, may correct any material error or omission that is discovered upon examination of the application. In determining the adjustment, the Service may correct any mathematical error appearing on the application, and it may likewise make any modification required by the law to correct the corporation's computation of the adjustment. If the required modification has not been made by the corporation and the Service has available the necessary information to make such modification within the 45-day period, it may make such modification. The examination of the application and the allowance of the adjustment shall not prejudice any right of the Service to claim later that the adjustment was improper.

(d) *Disallowance in whole or in part.* If the Internal Revenue Service finds that an application for an adjustment of overpayment of estimated tax contains material omissions or errors, the Service may disallow such application in whole or in part without further action. If, however, the Service deems that any omission or error can be corrected by it within the 45-day period, it may do so and allow the application in whole or in part. In the case of a disallowance or modification, the Service shall notify the corporation of such action. The Service's determination as to whether it can correct any omission or error shall be conclusive. Similarly, its action in disallowing, in whole or in part, any application for an adjustment of overpayment of estimated income tax shall be final and may not be challenged in any proceeding. The corporation in such case, however, may file a claim for credit or refund under section 6402, and may maintain a suit based on such claim if it is disallowed or if the Service does not act upon the claim within 6 months from the date it is filed.

(e) *Application of adjustment.* If the Internal Revenue Service allows the adjustment, it may first credit the amount of the adjustment against any liability in respect of an internal revenue tax on the part of the corporation which is due and payable on the date of the allowance of the adjustment before making payment of the balance to the corporation. In such a case, the Service shall notify the corporation of the

credit, and refund the balance of the adjustment.

(f) *Effect of adjustment.* (1) For purposes of all sections of the Code except section 6655, relating to additions to tax for failure to pay estimated income tax, any adjustment under section 6425 is to be treated as a reduction of prior estimated tax payments as of the date the credit is allowed or the refund is paid. For the purpose of section 6655 (a) through (f) credit or refund of an adjustment is to be treated as if not made in determining whether there has been any underpayment of estimated income tax and, if there is an underpayment, the period during which the underpayment existed. However, an excessive adjustment under section 6425 shall be taken into account in applying the addition to tax under section 6655(g).

(2) *Excessive adjustment.* For the effect of an excessive adjustment under section 6425, see § 1.6655–5.

[T.D. 7059, 35 FR 14547, Sept. 17, 1970]

ADDITIONS TO THE TAX, ADDITIONAL AMOUNTS, AND ASSESSABLE PENALTIES

§ 1.6654–1 Addition to the tax in the case of an individual.

(a) *In general.* (1) Section 6654 imposes an addition to the taxes under chapters 1 and 2 of the Code in the case of any underpayment of estimated tax by an individual (with certain exceptions described in section 6654(d)), including any underpayment of estimated qualified State individual income taxes which are treated pursuant to section 6361(a) as if they were imposed by chapter 1. This addition to the tax is in addition to any applicable criminal penalties and is imposed whether or not there was reasonable cause for the underpayment. The amount of the underpayment for any installment date is the excess of:

(i) The following percentages of the tax shown on the return for the taxable year or, if no return was filed, of the tax for such year, divided by the number of installment dates prescribed for such taxable year:

(A) 80 percent in the case of taxable years beginning after December 31, 1966, of individuals not referred to in section 6073(b) (relating to income from farming or fishing);

(B) 70 percent in the case of taxable years beginning before January 1, 1967, of such individuals; and

(C) 66⅔ percent in the case of individuals referred to in section 6073(b); over

(ii) The amount, if any, of the installment paid on or before the last day prescribed for such payment.

(2) The amount of the addition is determinated at the annual rate referred to in the regulations under section 6621 upon the underpayment of any installment of estimated tax for the period from the date such installment is required to be paid until the 15th day of the fourth month following the close of the taxable year, or the date such underpayment is paid, whichever is earlier. For purposes of determining the period of the underpayment (i) the date prescribed for the payment of any installment of estimated tax shall be determined without regard to any extension of time, and (ii) a payment of estimated tax on any installment date, to the extent that it exceeds the amount of the installment determined under subparagraph (1)(i) of this paragraph for such installment date, shall be considered a payment of any previous underpayment.

(3) In determining the amount of the installment paid on or before the last day prescribed for payment thereof, the estimated tax shall be computed without any reduction for the amount which the taxpayer estimates as his credit under section 31 (relating to tax withheld at source on wages), and the amount of such credit shall be deemed a payment of estimated tax. An equal part of the amount of such credit shall be deemed paid on each installment date (determined under section 6153) for the taxable year unless the taxpayer establishes the dates on which all amounts were actually withheld. In the latter case, all amounts withheld shall be considered as payments of estimated tax on the dates such amounts were actually withheld. Under section 31 the entire amount withheld during a calendar year is allowed as a credit against the tax for the taxable year which begins in such calendar year. However, where more than one taxable year begins in any calendar year no

portion of the amount withheld during the calendar year will be treated as a payment of estimated tax for any taxable year other than the last taxable year beginning in such calendar year. The rules prescribed in this subparagraph for determining the time as of which the amount withheld shall be deemed paid are applicable even though such amount was withheld during a taxable year preceding that for which the credit is allowed.

(4) The term *tax* when used in subparagraph (1)(i) of this paragraph shall mean:

(i) The tax imposed by chapter 1 of the Code (other than by section 56 or, for taxable years ending before September 30, 1968, the tax surcharge imposed by section 51), including any qualified State individual income taxes which are treated pursuant to section 6361(a) as if they were imposed by chapter 1, plus—

(ii) For taxable years beginning after December 31, 1966, the tax imposed by chapter 2 of the Code, minus

(iii) All credits allowed by part IV, subchapter A of chapter 1, except the credit provided by section 31, relating to tax withheld at source on wages, minus

(iv) In the case of an individual who is subject to one or more qualified State individual incomes taxes, the sum of the credits allowed against such taxes pursuant to section 6362(b)(2) (B) or (C) or section 6362(c)(4) and paragraph (c) of § 301.6362–4 of this chapter (Regulations on Procedure and Administration) (relating to the credit for income taxes of other States or political subdivisions thereof) and paragraph (c)(2) of § 301.6361–1 (relating to the credit for tax withheld from wages on account of qualified State individual income taxes), and minus

(v) For taxable years ending after February 29, 1980, the individual's overpayment of windfall profit tax imposed by section 4986 of the Code for the taxable year. For this purpose, the amount of such overpayment is the sum of (A) the amount by which such individual's aggregate windfall profit tax liability for the taxable year as a producer of crude oil is exceeded by withholding of windfall profit tax for the taxable year, and (B) any amount treated under section 6429 or 6430 as an overpayment of windfall profit tax for crude oil removed during the taxable year. The deemed payment date in section 4995(a)(4)(B) for the amount of windfall profit tax withheld with respect to payments for crude oil shall have no effect in the determination of the overpayment of windfall profit tax.

(b) *Statement relating to underpayment.* If there has been an underpayment of estimated tax as of any installment date prescribed for its payment and the taxpayer believes that one or more of the exceptions described in § 1.6654–2 precludes the assertion of the addition to the tax under section 6654, he should attach to his income tax return for the taxable year a Form 2210 showing the applicability of any exception upon which he relies.

(c) *Examples.* The method prescribed in paragraph (a) of this section for computing the addition to the tax may be illustrated by the following examples:

Example (1). An individual taxpayer files his return for the calendar year 1972 on April 15, 1973, showing a tax (income and self-employment tax) of $30,000. He had paid a total of $20,000 of estimated tax in four installments of $5,000 on each of the four installment dates prescribed for such year. No other payments were made prior to the date the return was filed. Since the amount of each installment paid by the last date prescribed for payment thereof is less than one-quarter of 80 percent of the tax shown on the return, the addition to the tax is applicable in respect of the underpayment existing as of each installment date and is computed as follows:

(1) Amount of tax shown on return	$30,000
(2) 80 percent of item (1)	24,000
(3) One-fourth of item (2)	6,000
(4) Deduct amount paid on each installment date	5,000
(5) Amount of underpayment for each installment date (item (3) minus item (4))	1,000
(6) Addition to the tax:	
1st installment—period 4–15–72 to 4–15–73	60
2nd installment—period 6–15–72 to 4–15–73	50
3rd installment—period 9–15–72 to 4–15–73	35
4th installment—period 1–15–73 to 4–15–73	15
Total	$160

Example (2). An individual taxpayer files his return for the calendar year 1955 on April

15, 1956, showing a tax of $30,000. The requirements of section 6015(a) were first met after April 1 and before June 2, 1955, and a total of $18,000 of estimated tax was paid in three equal installments of $6,000 on each of the three installment dates prescribed for such year. Since the amount of each installment paid by the last date prescribed for payment thereof is less than one-third of 70 percent of the tax shown on the return, the addition to the tax is existing as of each installment date and is applicable in respect of the underpayment computed as follows:

(1) Amount of tax shown on return		$30,000
(2) 70 percent of item (1)		21,000
(3) One-third of item (2)		7,000
(4) Deduct amount paid on each installment date		6,000
(5) Amount of underpayment for each installment date (item (3) minus item (4))		1,000
(6) Addition to the tax:		
1st installment—period 6–15–55 to 4–15–56	$50	
2d installment—period 9–15–55 to 4–15–56	35	
3d installment—period 1–15–56 to 4–15–56	15	
Total	100	

(Secs. 6015, 6154, 6654, 6655, and 7805, Internal Revenue Code of 1954 (96 Stat. 2395 and 2396, 68A Stat. 917; 26 U.S.C. 6015, 6154, 6654, 6655, and 7805))

[T.D. 6500, 25 FR 12146, Nov. 26, 1960, as amended by T.D. 7384, 40 FR 49322, Oct. 22, 1975; T.D. 7427, 41 FR 34029, Aug. 12, 1976; T.D. 7577, 43 FR 59358, Dec. 20, 1978; T.D. 8016, 50 FR 11855, Mar. 26, 1985]

§ 1.6654–2 Exceptions to imposition of the addition to the tax in the case of individuals.

(a) *In general.* The addition to the tax under section 6654 will not be imposed for any underpayment of any installment of estimated tax if, on or before the date prescribed for payment of the installment, the total amount of all payments of estimated tax made equals or exceeds the least of the following amounts:

(1) The amount which would have been required to be paid on or before the date prescribed for payment if the estimated tax were the tax shown on the return for the preceding taxable year, provided that the preceding taxable year was a year of 12 months and a return showing a liability for tax was filed for such year. However, this subparagraph shall not apply with respect to any taxable year which ends on or after September 30, 1968, for which a tax is imposed by section 51 (relating to tax surcharge), in the case of a payment of estimated tax the time prescribed for payment of which is on or after September 15, 1968.

(2) The amount which would have been required to be paid on or before the date prescribed for payment if the estimated tax were an amount equal to a percentage of the tax computed by placing on an annual basis the taxable income for the calendar months in the taxable year ending before the month in which the installment is required to be paid. That percentage is 80 percent in the case of taxable years beginning after December 31, 1966, of individuals not referred to in section 6073(b) (relating to income from farming or fishing), 70 percent in the case of taxable years beginning before January 1, 1967, of such individuals, and 66⅔ percent in the case of individuals referred to inferred to in section 6073(b). With respect to taxable years beginning after December 31, 1966, the adjusted self-employment income shall be taken into account in determining the amount referred to in this subparagraph if net earnings from self-employment (as defined in section 1402(a)) for the taxable year equal or exceed $400. For purposes of this subparagraph:

(i) Taxable income shall be placed on an annualized basis:

(A) For taxable years beginning after 1976, by:

(*1*) Multiplying by 12 (or the number of months in the taxable year if less than 12) the adjusted gross income and the itemized deductions for the calendar months in the taxable year ending before the month in which the installment is required to be paid,

(*2*) Dividing the resulting amounts by the number of such calendar months,

(*3*) Increasing the amount of the annualized adjusted gross income by the unused zero bracket amount, if any, determined by reference to the annualized itemized deductions, or decreasing the amount of the annualized adjusted gross income by the excess itemized deductions, if any, determined by reference to the annualized itemized deductions (the amount resulting under this step is annualized tax table income), and

(*4*) Deducting from the annualized tax table income the deduction for personal exemptions (such personal exemptions being determined as of the date prescribed for payment of the installment).

If the taxpaper would be eligible to use the tax tables on the basis of annualized tax table income, the amount which would have been required to be paid for purposes of this subparagraph may be determined by applying the tax tables to annualized tax table income. the amount resulting under (3).

(B) For taxable years beginning before 1977, by:

(*1*) Multiplying by 12 (or the number of months in the taxable year if less than 12) the taxable income (computed without the standard deduction and without the deduction for personal exemptions), or the adjusted gross income if the standard deduction is to be used for the calendar months in the taxable year ending before the month in which the installment is required to be paid,

(*2*) Dividing the resulting amount by the number of such calendar months, and

(*3*) Deducting from such amount the standard deduction, if applicable, and the deduction for personal exemptions (such personal exemptions being determined as of the date prescribed for payment of the installment).

(ii) The term ''adjusted self-employment income'' means:

(A) The net earnings from self-employment (as defined in section 1402(a)) for the calendar months in the taxable year ending before the month in which the installment is required to be paid, computed as if such months constituted the taxable year, but not more than

(B) The excess of:

(1) For taxable years beginning after 1966, $6,600

(2) For taxable years beginning after 1971, $9,000,

(3) For taxable years beginning after 1972, $10,800,

(4) For taxable years beginning after 1973, $13,200, and

(5) For taxable years beginning after 1974, an amount equal to the contribution and benefit base (as determined under section 230 of the Social Security Act) which is effective for the calendar year in which the taxable year begins, over the amount of the wages (within the meaning of section 1402(b)) for such calendar months placed on an annual basis. For this purpose, wages are annualized by multiplying by 12 (or the number of months in the taxable year in the case of a taxable year of less than 12 months) the wages for such calendar months and dividing the resulting amount by the number of such months.

(3) An amount equal to 90 percent of the tax computed, at the rates applicable to the taxable year, on the basis of the actual taxable income for the calendar months in the taxable year ending before the month in which the the installment is required to ber paid, as if such months constituted the entire taxable year. For taxable years beginning after December 31, 1966, such computation shall include the tax imposed by chapter 2 on the actual self-employment income for such months. For purposes of this subparagraph, the term ''actual self-employment income'' means:

(i) The net earnings from self-employment (as defined in section 1402(a))for such calendar months, computed as if such months constituted the taxable year, but not more than

(ii) The excess of:

(A) For taxable years beginning after 1966, $6,600,

(B) For taxable years beginning after 1971, $9,000,

(C) For taxable years beginning after 1972, $10,800,

(D) For taxable years beginning after 1973, $13,200, and

(E) For taxable years beginning after 1974, an amount equal to the contribution and benefit base (as determined under section 230 of the Social Security Act) which is effective for the calendar year in which the taxable year begins, over the amount of wages (within the meaning of section 1402(b)) for such months.

(4) The amount which would have been required to be paid on or before the date prescribed for payment if the estimated tax were an amount equal to a tax determined on the basis of the tax rates and the taxpayer's status

with respect to personal exemptions under section 151 for the taxable year, but otherwise on the basis of the facts shown on the return for the preceding taxable year and the law applicable to such year, in the case of an individual required to file a return for such preceding taxable year.

In the case of a taxpayer whose taxable year consists of 52 or 53 weeks in accordance with section 441(f), the rules prescribed by paragraph (b) of § 1.441–2 shall be applicable in determining, for purposes of subparagraph (1) of this paragraph, whether a taxable year was a year of 12 months and, for purposes of subparagraphs (2) and (3) of this paragraph, the number of calendar months in a taxable year preceding the date prescribed for payment of an installment of estimated tax. For the rules to be applied in determining taxable income for any period described in subparagraphs (2) and (3) of this paragraph in the case of a taxpayer who employs accounting periods *(e.g.*, thirteen 4-week periods or four 13-week periods) none of which terminates with the end of the applicable period described in subparagraph (2) or (3) of this paragraph, see paragraph (a)(5) of § 1.6655–2.

(b) *Meaning of terms.* As used in this section and § 1.6654–3:

(1) The term ''tax'' means:

(i) The tax imposed by chapter 1 of the Code (other than by section 56), including any qualified State individual income taxes which are treated pursuant to section 6361(a) as if they were imposed by chapter 1, plus

(ii) For taxable years beginning after December 31, 1966, the tax imposed by chapter 2 of the Code, minus

(iii) The credits against tax allowed by part iv, subchapter A, chapter 1 of the Code, other than the credit against tax provided by section 31 (relating to tax withheld on wages), and without reduction for any payments of estimated tax, minus

(iv) In the case of an individual who is subject to one or more qualified State individual income taxes, the sum of the credits allowed against such taxes pursuant to section 6262(b)(2) (B) or (C) or section 6262(c)(4) and paragraph (c) of § 301.6362–4 of this chapter (Regulations on Procedure and Administration) (relating to the credit for income taxes of other States or political subdivisions thereof) and paragraph (c)(2) of § 301.6361–1 (relating to the credit for tax withheld from wages on account of qualified State individual income taxes), and minus

(v) For taxable years ending after February 29, 1980, the individual's overpayment of windfall profit tax imposed by section 4986 of the Code for the taxable year. For this purpose, the amount of such overpayment is the sum of (A) the amount by which such individual's aggregate windfall profit tax liability for the taxable year as producer of crude oil is exceeded by withholding of windfall profit tax for the taxable year, and (B) any amount treated under section 6429 or 6430 as an overpayment of windfall profit tax for crude oil removed during the taxable year. The deemed payment date in section 4995(a)(4)(B) for the amount of windfall profit tax withheld with respect to payments for crude oil shall have no effect in the determination of the overpayment of windfall profit tax.

(2) The credits against tax allowed by part IV, subchapter A, chapter 1 of the Code, are:

(i) In the case of the exception described in paragraph (a)(1) of this section, the credits shown on the return for the preceding taxable year,

(ii) In the case of the exceptions described in paragraph (a)(2) and (3) of this section, the credits computed under the law and rates applicable to the current taxable year, and

(iii) In the case of the exception described in paragraph (a)(4) of this section, the credits shown on the return for the preceding taxable year, except that if the amount of any such credit would be affected by any change in rates or status with respect to personal exemptions, the credits shall be determined by reference to the rates and status applicable to the current taxable year.

A change in rate may be either a change in the rate of tax, such as a change in the rate of the tax imposed by section 1 or section 1401, or a change in a percentage affecting the computation of the credit, such as a change in the rate of withholding under chapter 3 of the Code or a change in the percentage of a qualified investment which is

specified in section 46 for use in determining the amount of the investment credit allowed by section 38.

(3) The term ''return for the preceding taxable year'' means the income tax return for such year which is required by section 6012(a)(1) and, in the case of taxable years beginning after December 31, 1966, the self-employment tax return for such year which is required by section 607.

(c) *Examples*. The following examples illustrate the application of the exceptions to the imposition of the addition to the tax for an underpayment of estimated tax, in the case of an individual whose taxable year is the calendar year:

Example (1). A, a married man with one child and a dependent parent, files a joint return with his spouse, B, for 1955 on April 15, 1956, showing taxable income of $44,000 and a tax of $16,760. A and B had filed a joint declaration of estimated tax on April 15, 1955, showing an estimated tax of $10,000 which was paid in four equal installments of $2,500 each on April 15, June 15, and September 15, 1955, and January 15, 1956. The balance of $6,760 was paid with the return. A and B have an underpayment of estimated tax of $433 (¼ of 70 percent of $16,760, less $2,500) for each installment date. The 1954 calendar year return of A and B showed a liability of $10,000. Since the total amount of estimated tax paid by each installment date equalled the amount that would have been required to be paid on or before each of such dates if the estimated tax were the tax shown on the return for the preceding year, the exception described in paragraph (a)(1) of this section applies and no addition to the tax will be imposed.

Example (2). Assume the same facts as in example (1), except that the joint return of A and B for 1954 showed taxable income of $32,000 and a tax liability of $10,400. Assume further that only two personal exemptions under section 151 appeared on the 1954 return. The exception described in paragraph (a)(1) of this section would not apply. However, A and B are entitled to four exemptions under section 151 for 1955. Taxable income for 1954 based on four exemptions, but otherwise on the basis of the facts shown on the 1954 return, would be $30,800. The tax on such amount in the case of a joint return would be $9,836. Since the total amount of estimated tax paid by each installment date exceeds the amount which would have been required to be paid on or before each of such dates if the estimated tax were $9,836, the exception described in paragraph (a)(4) of this section applies and no addition to the tax will be imposed.

Example (3). C, who is self-employed (other than as a farmer or fisherman), has annualized taxable income of $6,900 for the period January 1, 1967, through August 31, 1967, the income tax on which is $1,171. For the same period his net earnings from self-employment are $5,000 and his wages are $2,000. The estimated tax payments made by C for 1967 on or before September 15, 1967, total $1,200. For the purposes of the exception described in paragraph (a)(2) of this section, the adjusted self-employment income is $3,600, computed as follows:

(1) Net earnings from self-employment	$5,000
(2) $6,600 minus annualized wages ($6,600 – 3,000 ($2,000×12÷8))	3,600
(3) Lesser of (1) or (2)	3,600

The tax on C's adjusted self-employment income would be $230.40 ($3,600×6.4 percent). Since the total amount of estimated tax paid on or before September 15, 1967, exceeds $1,121.12, that is, 80 percent of $1,401.40 ($1,171+230.40), the exception described in paragraph (a)(2) of this section applies and no addition to tax will be imposed.

Example (4). D, who is self-employed (other than as a farmer or fisherman), has actual taxable income of $3,800 for the period January 1, 1967, through August 31, 1967, the income tax on which is $586. For the same period his net earnings from self-employment are $5,000 and his wages are $2,000. The estimated tax payments made by D for 1967 on or before September 15, 1967, total $840. For the purposes of the exception described in paragraph (a)(3) of this section, the actual self-employment income for this period is $4,600, computed as follows:

(1) Net earnings from self-employment	$5,000
(2) $6,600 minus wages ($6,600 – 2,000)	4,600
(3) Lesser of (1) or (2)	4,600

The tax on D's actual self-employment income would be $294.40 ($4,600×6.4 percent). Since the total amount of estimated tax paid by September 15, 1967, exceeds $792.36, that is, 90 percent of $880.40 ($586+294.40), the exception described in paragraph (a)(3) of this section applies and no addition to tax will be imposed.

Example (5). E and F, his spouse, filed a joint return for the calendar year 1967, showing a tax liability of $10,000. The liability, attributable primarily to income received during the last quarter of the year, included both income and self-employment tax. Their aggregate payments of estimated tax on or before September 15, 1967, total $1,350, representing three installments of $450 paid on each of the first three installment dates prescribed for the taxable year. Since each installment paid, $450, was less then $2,000 (¼ of 80 percent of $10,000), there was an underpayment on each of the installment dates. Assume that the exceptions described in paragraph (a) (1) and (4) of this section do not apply. Actual taxable income for the

three months ending March 31, 1967, was $2,000 and for the five months ending May 31, 1967, was $4,500. Actual self-employment income, for the same periods, was $2,000 and $4,000, respectively. Since the amounts paid by the April 15 and June 15 installment dates, $450 and $900, respectively, exceed $376.20 and $873.90, respectively (90 percent of the income tax on the actual taxable income of $2,000 and $4,500, respectively, determined on the basis of a joint return, and the self-employment tax on the actual self-employment income of $2,000 and $4,000, respectively), the exception described in paragraph (a)(3) of this section applies and no addition to the tax will be imposed for the underpayments on the April 15 and June 15 installment dates. For the eight months ending August 31, 1967, actual taxable income, assuming E and F did not elect to use the standard deduction, was $7,500; net earnings from self-employment were $6,000 and wages were $2,700. Since the total amount paid by the September 15 installment date, $1,350, was less than $1,381.14 (90 percent of the income tax on the actual taxable income of $7,500 determined on the basis of a joint return and the self-employment tax on actual self-employment income of $3,900 ($6,600 − 2,700)), the exception described in paragraph (a)(3) of this section does not apply to the September 15 installment. Furthermore, the exception described in paragraph (a)(2) of this section does not apply, as illustrated by the following computation:

(1) Income tax:	
Taxable income for the period ending Aug. 31, 1967 (without deduction for personal exemptions) on an annual basis ($8,700×12÷8)	$13,050.00
Deduction for two personal exemptions	1,200.00
	11,850.00
Tax on $11,850 (on the basis of a joint return)	2,227.00
(2) Self-employment tax:	
Net earnings from self-employment	6,000.00
Adjusted self-employment income ($6,600 − 4,050 annualized wages ($2,700×12÷8))	2,550.00
Tax on adjusted self-employment income ($2,550×6.4 percent)	163.20
(3) Total tax ($2,227.00+163.20)	2,390.20
(4) ¾ of 80 percent of $2,390.20	1,434.12
Amount paid by Sept. 15, 1967	1,350.00

An addition to the tax will thus be imposed for the underpayment of $1,550 ($2,000 − 450) on the September 15 installment.

Example (6). Assume the same facts as in example (5) and assume further that adjusted gross income for the eight months ending August 31, 1967, was $9,200 and the amount of deductions (other than the deduction for personal exemptions) not allowable in determining adjusted gross income aggregate only $500. If E and F elect, they may use the standard deduction in computing the tax for purposes of the exceptions described in paragraph (a) (2) and (3) of this section. Taxable income for purposes of the exception described in paragraph (a)(3) of this section would be reduced to $7,080 ($9,200 less $1,200 for two personal exemptions and $920 for the standard deduction). The income tax thereon is $1,205.20; income tax and self-employment tax total $454.80 ($1,205.20+249.60 ($3,900×6.4 percent)). Since the amount paid by the September 15 installment date, $1,350, exceeds $1,309.32 (90 percent of $1,454.80), the exception described in paragraph (a)(3) of this section applies. However, the exception described in paragraph (a)(2) of this section does not apply, as illustrated by the following computation:

Adjusted gross income for period ending Aug. 31, 1967	$9,200.00
Adjusted gross income annualized ($9,200×12÷8)	13,800.00
Taxable income annualized ($13,800 minus $1,200 for two personal exemptions and $1,000 for the standard deduction)	11,600.00
Tax on $11,600 (on basis of joint return)	2,172.00
Self-employment tax on adjusted self-employment income ($2,550×6.4 percent)	163.20
Total tax ($2,172.00+163.20	2,335.20
¾ of 80 percent of $2,335.20	1,401.12
Amount paid by Sept. 15, 1967	1,350.00

Example (7). G was a married individual, 73 years of age, who filed a joint return with his wife, H, for the calendar year 1956. H, who was 70 years of age, had no income during the year. G had taxable income in the amount of $7,000 for the eight-month period ending on August 31, 1956, which included $2,000 of dividend income (after excluding $50 under section 116) and $900 of rental income. The $7,000 figure also reflected a deduction of $2,400 for personal exemptions ($600×4), since G and H are both over 65 years of age. The application of the exception described in paragraph (a)(2) of this section to an underpayment of estimated tax on the September 15 installment date may be illustrated by the following computation:

Taxable income for the period ending Aug. 31, 1956 (without deduction for personal exemptions) on an annual basis ($9,400×12÷8)	$14,100.00
Deduction for personal exemptions	2,400.00
Taxable income on an annual basis	11,700.00
Tax (on the basis of a joint return)	2,642.00
Dividends received for 8-month period	2,050.00
Less: Amount excluded from gross income under section 116	50.00
Dividends included in gross income	2,000.00
Dividend income annualized ($2,000×12÷8)	3,000.00
Dividends received credit under section 34 (4 percent of $3,000)	120.00
Tax less dividends received credit	2,522.00
Retirement income (as defined in section 37(c)) includes:	
Dividend income (to extent included in gross income)	2,000.00
Rental income	900.00
Total retirement income	2,900.00

Limit on amount of retirement income under section 37(d)	1,200.00
Retirement income credit under section 37 (20 percent of $1,200)	240.00
Tax less credits under section 34 and section 37	2,282.00
Amount determined under the exception described in paragraph (a)(2) of this section (¾ of 70 percent of $2,282)	1,198.05

Example (8). C, an unmarried individual for whom another taxpayer is entitled to a deduction under section 151(e), has adjusted gross income of $4,000 for the period January 1, 1977, through August 31, 1977. All of C's income is non-exempt interest. For the same period C, who is entitled to one personal exemption, has itemized deductions amounting to $300. C is entitled to no credits other than the general tax credit. C filed a declaration of estimated tax on April 15, 1977, and on or before September 15, 1977, makes estimated tax payments for 1977 which total $460. For purposes of determing whether the exception described in paragraph (a)(2) of this section applies, the following computations are necessary:

Adjusted gross income for the period ending Aug. 31, 1977, on an annual basis ($4,000 × 12÷8)		$6,000.00
Itemized deductions for the period ending Aug. 31, 1977, on an annual basis ($300 × 12÷8)		450.00
Unused zero bracket amount computation required under sec. 63(e)(1)(D):		
Zero bracket amount	$2,200.00	
Annualized itemized deductions	450.00	
Unused zero bracket amount	1,750.00	
Annualized adjusted gross income		6,000.00
Plus: unused zero bracket amount		1,750.00
Annualized tax table income		7,750.00
Tax from tables		757.00
Amount specified in paragraph (a)(2) of this section (¾×80 pct.×$757)		$454.20

The exception described in paragraph (a)(2) applies, and no addition to tax will be imposed.

Example (9). An unmarried taxpayer entitled to one exemption, has adjusted gross income of $16,000 and itemized deductions of $2,000 for the period for the period January 1, 1977, through August 31, 1977. D has no net earnings from self-employment and is entitled to no credits other than the general tax credit. D files a declaration of estimated tax on April 15, 1977, and on or before September 15, 1977, makes estimated tax payments for 1977 which total $3,000. For purposes of determining whether the exception in paragraph (a)(2) of this section applies, the following computations are necessary:

Adjusted gross income for the period ending Aug. 31, 1977, on an annual basis ($16,000 × 12÷8)		$24,000
Itemized deductions for the period ending Aug. 31, 1977, on an annual basis ($2,000 × 12÷8)		3,000
Annualized itemized deductions	$3,000	
Minus zero bracket amount	2,200	
Excess itemized deductions	800	
Annualized adjusted gross income		24,000
Minus excess itemized deductions		800
Annualized tax table income		23,200
Minus: Personal exemption		750
Annualized taxable income		22,450
Tax under sec. 1(c) on annualized taxable income		5,325
Minus: general tax credit		180
Total		5,145
Amount specified in paragraph (a)(2) of this section (¾×80 pct.×$5,145)		3,087

The exception described in paragraph (a)(2) does not apply.

(d) *Determination of taxable income for installment periods*—(1) *In general.* (i) In determining the applicability of the exceptions described in paragraph (a) (2) and (3) of this section, there must be an accurate determination of the amount of income and deductions for the calendar months in the taxable year preceding the installment date as of which the determination is made, that is, for the period terminating with the last day of the third, fifth, or eighth month of the taxable year. For example, a taxpayer distributes year-end bonuses to his employees but does not determine the amount of the bonuses until the last month of the taxable year. He may not deduct any portion of such year-end bonuses in determining his taxable income for any installment period other than the final installment period for the taxable year, since deductions are not allowable until paid or accrued, depending on the taxpayer's method of accounting.

(ii) If a taxpayer on an accrual method of accounting wishes to use either of the exceptions described in paragraphs (a) (2) and (3) of this section, he must establish the amount of income and deductions for each applicable period. If his income is derived from a business in which the production, purchase, or sale of merchandise is an income-producing factor requiring the use of inventories, he will be unable to determine accurately the amount of his taxable income for the applicable period

unless he can establish, with reasonable accuracy, his cost of goods sold for the applicable installment period. The cost of goods sold for such period shall be considered, unless a more exact determination is available, as such part of the cost of goods sold during the entire taxable year as the gross receipts from sales for such installment period is of gross receipts from sales for the entire taxable year.

(2) *Members of partnerships*. The provisions of this subparagraph shall apply in determining the applicability of the exceptions described in paragraphs (a)(2) and (3) of this section to an underpayment of estimated tax by a taxpayer who is a member of a partnership.

(i) For purposes of determining taxable income, there shall be taken into account:

(A) The partner's distributive share of partnership items set forth under section 702,

(B) The amount of any guaranteed payments under section 707(c), and

(C) Gains or losses on partnership distributions which are treated as gains or losses on sales of property.

(ii) For purposes of determining net earnings from self-employment (for taxable years beginning after December 31, 1966) there shall be taken into account:

(A) The partner's distributive share of income or loss, described in section 702(a)(9), subject to the special rules set forth in section 1402(a) and §§1.1402(a)–1 to 1.1402(a)–16, inclusive, and

(B) The amount of any guaranteed paments under section 707(c), except for payments received from a partnership not engaged in a trade or business within the meaning of section 1402(c) and §1.1402(c)–1.

In determining a partner's taxable income and, for taxable years beginning after December 31, 1966, net earnings from self-employment, for the months in his taxable year which precede the month in which the installment date falls, the partner shall take into account items set forth in sections 702 and 1402(a) for any partnership taxable year ending with or within his taxable year to the extent that such items are attributable year which precede the month in which the installment date falls. For special rules used in computing a partner's net earnings from self-employment in the case of the termination of his taxable year as a result of death, see section 1402(f) and §1.1402(f)–1. In addition, a partner shall include in his taxing after December 31, 1966, net earnings from self-employment, for the months in his taxable year which precede the month in which the installment date falls guaranteed payments from the partnership to the extent that such guaranteed payments are includible in his taxable income for such months. See section 706(a), section 707(c), paragraph (c) of §1.707–1 and section 1402(a).

(iii) The provisions of subdivision (i)(A) and (B) of this subdivision (ii) of this subparagraph may be illustrated by the following examples:

Example (1). A, whose taxable year is the calendar year, is a member of a partnership whose taxable year ends on January 31. A must take into account, in determining his taxable income for the installment due on April 15, 1973, all of his distributive share of partnership items described in section 702 and the amount of any guaranteed payments made to him which were deductible by the partnership in the partnership taxable year beginning on February 1, 1972, and ending on January 31, 1973. A must take into account, in determining his net earnings from self-employment, his distributive share of partnership income or loss described in section 702(a)(9), subject to the special rules set forth in section 1402(a) and §§1.1402(a)–1 to 1.1402(a)–16, inclusive.

Example (2). Assume that the taxable year of the partnership of which A, a calendar year taxpayer, is a member ends on June 30. A must take into account in the determination of his taxable income and net earnings from self-employment for the installment due on April 15, 1973, his distributive share of partnership items for the period July 1, 1972, through March 31, 1973; for the installment due on June 15, 1973, he must take into account such amounts for the period July 1, 1972, through May 31, 1973; and for the installment due on September 15, 1973, he must take into account such amounts for the entire partnership taxable year of July 1, 1972, through June 30, 1973 (the date on which the partnership taxable year ends).

(3) *Beneficiaries of estates and trusts*. In determining the applicability of the exceptions described in paragraph (a)(2) and (3) of this section as of any installment date, the beneficiary of an estate or trust must take into account his distributable share of income from

the estate or trust for the applicable period (whether or not actually distributed) if the trust or estate is required to distribute income to him currently. If the estate or trust is not required to distribute income currently, only the amounts actually distributed to the beneficiary during such period must be taken into account. If the taxable year of the beneficiary and the taxable year of the estate or trust are different, there shall be taken into account the beneficiary's distributable share of income, or the amount actually distributed to him as the case may be, during the months in the taxable year of the estate or trust ending within the taxable year of the beneficiary which precede the month in which the installment date falls. See subparagraph (2) of this paragraph for examples of a similar rule which is applied when a partner and the partnership of which he is a member have different taxable years.

(e) *Special rule in case of change from joint return or separate return for the preceding taxable year*—(1) *Joint return to separate returns*. In determining the applicability of the exceptions described in paragraph (a) (1) and (4) of this section to an underpayment of estimated tax, a taxpayer filing a separate return who filed a joint return for the preceding taxable year shall be subject to the following rule: The tax:

(i) Shown on the return for the preceding taxable year, or

(ii) Based on the tax rates and personal exemptions for the current taxable year but otherwise determined on the basis of the facts shown on the return for the preceding taxable year, and the law applicable to such year,

shall be that portion of the tax which bears the same ratio to the whole of the tax as the amount of the tax for which the taxpayer would have been liable bears to the sum of the taxes for which the taxpayer and his spouse would have been liable had each spouse filed a separate return for the preceding taxable year. For rules with respect to the allocation of joint payments of estimated tax, see section 6015(b) and § 1.605(b)–1(b).

(2) *Examples*. The rule in paragraph (i) of this paragraph may be illustrated by the following examples:

Example (1). H and W filed a joint return for the calendar year 1955 showing taxable income of $20,000 and a tax of $5,280. Of the $20,000 taxable income, $18,000 was atributable to H, and $2,000 was attributable to W. H and W filed separate returns for 1956. The tax shown on the return for the preceding taxable year, for purposes of determining the applicability of the exception described in paragraph (a)(1) of this section to an underpayment of estimated tax by H for 1956, is determined as follows:

Taxable income of H for 1955	$18,000
Tax on $18,000 (on basis of separate return)	6,200
Taxable income of W for 1955	2,000
Tax on $2,000 (on basis of separate return)	400
Aggregate tax of H and W (on basis of separate returns)	6,600
Portion of 1955 tax shown on joint return attributable to H (6200/6600×5280)	4,960

Example (2). Assume the same facts as in example (1) and that H and W file a joint declaration of estimated tax for 1956 and pay estimated tax in amounts determined on the basis of their eligibility for three rather than two exemptions for 1956. H and W ultimately file separate income tax returns for 1956. Assume further that the exception described in paragraph (a)(1) of this section does not apply. The tax based on the tax rates and personal exemptions for 1956 but otherwise determined on the basis of the facts shown on the return for 1955 and the law applicable to 1955, for purposes of determining the applicability of the exception described in paragraph (a)(4) of this section to an underpayment of estimated tax by H for 1956, is determined as follows:

Taxable income of H and W for 1955 based on additional personal exemption for 1956	$19,400
Tax on 1955 income based on joint return rate for 1956	5,076
Portion of 1955 tax attributable to H (computed as in example (1) but allowing benefit of additional exemption to H)	5900/6300
Portion of tax attributable to H based on tax rates and personal exemptions for 1956 but otherwise on facts on 1955 return ($5900/6300×$5,076)	$4,754

Example (3). Assume that H and W had the same taxable income in 1972 as in 1955, and that they filed a joint return for 1972 and separate returns for 1973. Assume further that H's taxable income for 1972 included net earnings from self-employment in excess of the $9,000 maximum base for the self-employment tax for 1972, and that the joint return filed by H and W for 1972 showed tax under Chapter 1 (other than section 56) and tax under Chapter 2 totaling $5,055. The tax shown on the return for 1972, for purposes of determining the applicability of the exception described in paragraph (a)(1) of this section to an underpayment of estimated tax by H for 1973, is determined as follows:

Taxable income of H for 1972	$18,000
Chapter 1 tax (other than section 56 tax) on $18,000 (on basis of separate return)	5,170

Self-employment income of H for 1972	9,000
Chapter 2 tax on $9,000	$675
Total of such taxes	$5,845
Taxable income of W for 1972	2,000
Chapter 1 tax (other than section 56 tax) on $2,000 (on basis of separate return)	310
Aggregate tax on H and W (on basis of separate returns)	$6,155
Portion of 1972 tax shown on joint return attributable to H (5845/6155×$5,055)	$4,800.40

(3) *Separate return to joint return.* In the case of a taxpayer who files a joint return for the taxable year with respect to which there is an underpayment of estimated tax and who filed a separate return for the preceding taxable year:

(i) The tax shown on the return for the preceding taxable year, for purposes of determining the applicability of the exception described in paragraph (a)(1) of this section, shall be the sum of both the tax shown on the return of the taxpayer and the tax shown on the return of the taxpayer's spouse for such preceding year, and

(ii) The facts shown on both the taxpayer's return and the return of his spouse for the preceding taxable year shall be taken into account for purposes of determining the applicability of the exception described in paragraph (a)(4) of this section.

(4) *Example.* The rules described in subparagraph (3) of this paragraph may be illustrated by the following example:

Example. H and W filed separate income tax returns for the calendar year 1954 showing tax liabilities of $2,640 and $350, respectively. In 1956 they married and participated in the filing of a joint return for that year. In the filing of a joint return for that year. Thus, for the purpose of determining the applicability of the exceptions described in paragraph (a)(1) and (4) of this section to an underpayment of estimated tax for the year 1955, the tax shown on the return for the preceding taxable year is $2,990 ($2,640 plus $350).

(Secs. 6015, 6154, 6654, 6655, and 7805, Internal Revenue Code of 1954 (96 Stat. 2395 and 2396, 68A Stat. 917; 26 U.S.C. 6015, 6154, 6654, 6655, and 7805))

[T.D. 7427, 41 FR 34029, Aug. 12, 1976, as amended by T.D. 7577, 43 FR 59359, Dec. 20, 1978; T.D. 7585, 44 FR 1105, Jan. 4, 1979; T.D. 8016, 50 FR 11855, Mar. 26, 1985; 50 FR 18244, Apr. 30, 1985]

§ 1.6654–3 Short taxable years of individuals.

(a) *In general.* The provisions of section 6654, with certain modifications relating to the application of subsection (d) thereof, which are explained in paragraph (b) of this section, are applicable in the case of a short taxable year for which a declaration is required to be filed. (See § 1.6015(g)–1 for requirement of declaration for short taxable year.)

(b) *Rules as to application of section 6654(d).* (1) In any case in which the taxable year for which an underpayment of estimated tax exists is a short taxable year due to a change in annual accounting periods, in determining the tax:

(i) Shown on the return for the preceding taxable year (for purposes of section 6654(d)(1)), or

(ii) Based on the personal exemptions and rates for the current taxable year but otherwise on the basis of the facts shown on the return for the preceding taxable year, and the law applicable to such year (for purposes of section 6654(d)(4)),

the tax will be reduced by multiplying it by the number of months in the short taxable year and dividing the resulting amount by 12.

(2) If the taxable year for which an underpayment of estimated tax exists is a short taxable year due to a change in annual accounting periods, in annualizing the taxable income for the months in the taxable year preceding an installment date, for purposes of section 6654(d)(1)(C), the personal exemptions allowed as deductions under section 151 shall be reduced to the same extent that they are reduced under section 443(c) in computing the tax for a short taxable year.

(3) If ''the preceding taxable year'' referred to in section 6654(d)(4) was a short taxable year, for purposes of determining the applicability of the exception described in section 6654(d)(4), the tax, computed on the basis in the facts shown on the return for the preceding year, shall be the tax computed on the annual basis in the manner described in section 443(b)(1) (prior to its reduction in the manner described in the last sentence thereof). If the tax

rates or the taxpayer's status with respect to personal exemptions for the taxable year with respect to which the underpayment occurs differ from such rates or status applicable to the preceding taxable year, the tax determined in accordance with this subparagraph shall be recomputed to reflect the rates and status applicable to the year with respect to which the underpayment occurs.

[T.D. 6500, 25 FR 12149, Nov. 26, 1960, as amended by T.D. 7427, 41 FR 34033, Aug. 12, 1976]

§ 1.6654–4 Waiver of penalty for underpayment of 1971 estimated tax by an individual.

(a) *In general.* Section 207 of the Revenue Act of 1971 provides that, in the case of individuals, the penalty prescribed by section 6654(a) and § 1.6654–1 for underpayment of estimated tax shall not apply in certain cases to taxable years beginning after December 31, 1970, and ending before January 1, 1972. The penalty shall be waived only if the taxpayer meets one of the gross income requirements contained in paragraph (b) of this section and if the limitation contained in paragraph (c) of this section is not applicable.

(b) *Gross income requirement.* Except as provided in paragraph (c) of this section, the waiver provided in paragraph (a) of this section shall be applicable only:

(1) If the gross income for the taxable year does not exceed $10,000 in the case of:

(i) A single individual who is neither a head of a household (as defined in section 2(b)) nor a surviving spouse (as defined in section 2(a)), or

(ii) A married individual not entitled under section 6013 to file a joint return for the taxable year, or

(2) If the gross income for the taxable year does not exceed $20,000 in the case of:

(i) A head of a household (as defined in section 2(b)) or

(ii) A surviving spouse (as defined in section 2(a)), or

(3) If the aggregate gross income for the taxable year does not exceed $20,000 in the case of a married individual (entitled under section 6013 to file a joint return for the taxable year) and his spouse.

(c) *Limitation.* Notwithstanding any other provision of this section, the waiver provided in paragraph (a) of this section shall not be applicable if, in the taxable year, the taxpayer has income from sources other than wages (as defined in section 3401(a)) in excess of $200 ($400 in the case of a husband and wife entitled to file a joint return for the taxable year under section 6013). Thus, for example, even if the aggregate gross income of a husband and wife (entitled under section 6013 to file a joint return for the taxable year) does not exceed $20,000, the waiver of the penalty for underpayment of estimated tax shall not apply if the husband and wife have, in the aggregate, income from sources other than wages in excess of $400.

[T.D. 7282, 38 FR 19028, July 17, 1973]

§ 1.6654–5 Applicability.

Section 6654 is applicable only with respect to taxable years beginning after December 31, 1954. Section 294(d) of the Internal Revenue Code of 1939 shall continue in force with respect to taxable years beginning before January 1, 1955.

[T.D. 6500, 25 FR 12150, Nov. 26, 1960. Redesignated by T.D. 7282, 38 FR 19028, July 17, 1973]

§ 1.6655–1 Addition to the tax in the case of a corporation.

(a) *In general.* (1) Section 6655 imposes an addition to the tax under chapter 1 of the Code in the case of any underpayment of estimated tax by a corporation (with certain exceptions described in section 6655(d)). This addition to the tax is in addition to any applicable criminal penalties and is imposed whether or not there was reasonable cause for the underpayment. The amount of the underpayment for any installment date is the excess of:

(i) 70 percent of the tax shown on the return for the taxable year or, if no return was filed, 70 percent of the tax for such year, multiplied by the percentage of estimated tax required to be paid on or before the installment date, over

(ii) The amount, if any, of the installment paid on or before the last day prescribed for such payment.

(2) The amount of the addition is determined at the annual rate referred to in the regulations under section 6621 upon the underpayment of any installment of estimated tax for the period from the date such installment is required to be paid until the 15th day of the third month following the close of the taxable year, or the date such underpayment is paid, whichever is earlier. For purposes of determining the period of the underpayment (i) the date prescribed for payment of any installment of estimated tax shall be determined without regard to any extension of time, and (ii) a payment of estimated tax on any installment date, to the extent that it exceeds the amount of the installment determined under subparagraph (1)(i) of this paragraph for such date, shall be considered a payment of the previous underpayment, if any.

(3) The term *tax* as used in subparagraph (1)(i) of this paragraph means the excess of the tax imposed by section 11 or 1201(a), or subchapter L, chapter 1 of the Code, whichever is applicable, over the sum of $100,000 and the credits against tax provided by sections 32, 33, and 38. However, for the rule with respect to the limitation upon the $100,000 exemption for members of certain electing affiliated groups, see section 243(b)(3)(C)(v) and the regulations thereunder.

(4) For special rules relating to the determination of the amount of the underpayment in the case of a corporation whose income is included in a consolidated return, see § 1.1502–5(b).

(b) *Statement relating to underpayment.* If there has been an underpayment of estimated tax as of the installment date prescribed for its payment and the taxpayer believes that one or more of the exceptions described in § 1.6655–2 precludes the assertion of the addition to the tax under section 6655, it should attach to its income tax return for the taxable year a Form 2220 showing the applicability of any exception upon which the taxpayer relies.

(c) *Example.* The method prescribed in paragraph (a) of this section of computing the addition to the tax may be illustrated by the following example:

Example. A corporation using the calendar year basis reported on its declaration for 1955, estimated tax in the amount of $50,000. It made payments of $2,500 each on September 15, 1955, and December 15, 1955. On March 15, 1956, it filed its final income tax return showing a tax liability of $200,000. Since the amount of each of the two installments paid by the last date prescribed for payment thereof was less than 5 percent of 70 percent of the tax shown on the return, the addition to the tax under section 6655(a) is applicable and is computed as follows:

(1) Tax as defined in paragraph (a) of this section ($200,000 – $100,000 (no credits allowable under sections 32 and 33))	$100,000
(2) 70% of item (1)	70,000
(3) Amount of estimated tax required to be paid on each installment date (5% of $70,000)	3,500
(4) Deduct amount paid on each installment date	2,500
(5) Amount of underpayment for each installment date (item (3) minus item (4))	1,000
(6) Addition to the tax:	
First installment—period 9–15–55 to 3–15–56	30
Second installment—period 12–15–55 to 3–15–56	15
Total	45

[T.D. 6500, 25 FR 12150, Nov. 26, 1960, as amended by T.D. 6768, 29 FR 14926, Nov. 4, 1964; T.D. 7244, 37 FR 28897, Dec. 30, 1972; T.D. 7384, 40 FR 49322, Oct. 22, 1975]

§ 1.6655–2 Exceptions to imposition of the addition to the tax in the case of corporations.

(a) *In general.* The addition to the tax under section 6655 will not be imposed for any underpayment of any installment of estimated tax if, on or before the date prescribed for payment of the installment, the total amount of all payments of estimated tax made equals or exceeds the amount which would have been required to be paid on or before such date if the estimated tax were the least of the following amounts:

(1) The tax shown on the return for the preceding taxable year, provided that the preceding taxable year was a year of 12 months and a return showing a liability for tax was filed for such year;

(2) An amount equal to a tax determined on the basis of the tax rates for the taxable year but otherwise on the

basis of the facts shown on the return for the preceding taxable year and the law applicable to such year, in the case of a corporation required to file a return for such preceding taxable year; or

(3) An amount equal to 70 percent of the tax determined by placing on an annual basis the taxable income for:

(i) The first 3 months of the taxable year, in the case of the installment required to be paid in the 4th month,

(ii) Either the first 3 months or the first 5 months of the taxable year (whichever results in no addition being imposed), in the case of the installment required to be paid in the 6th month,

(iii) Either the first 6 months or the first 8 months of the taxable year (whichever results in no addition being imposed), in the case of the installment required to be paid in the 9th month, and

(iv) Either the first 9 months or the first 11 months of the taxable year (whichever results in no addition being imposed), in the case of the installment required to be paid in the 12th month.

The taxable income so determined shall be placed on an annual basis by first multiplying it by 12, and then dividing the resulting amount by the number of months in the taxable year for which the taxable income was so determined.

(4) In the case of a taxpayer whose taxable year consists of 52 or 53 weeks in accordance with section 441(f), the rules prescribed by paragraph (b) of §1.441–2 shall be applicable in determining, for purposes of subparagraph (1) of this paragraph, whether a taxable year was a year of 12 months and in determining, for purposes of subparagraph (3) of this paragraph, the commencement of the 3-month period, or the 3- or 5-month period, or the 6- or 8-month period, or the 9- or 11-month period, whichever is applicable. For example, if a taxable year begins on December 26, 1956, taxable income for the first 6 months of such year, for purposes of subparagraph (3) of this paragraph, shall be taxable income for the period beginning on December 26, 1956, and ending on June 30, 1957, since such taxable year is deemed to commence on January 1, 1957, under section 441(f).

(5) If the end of any accounting period employed by the taxpayer (e.g., any of either thirteen 4-week periods or four 13-week periods) does not correspond to the termination date of the applicable 3-month, or 3- or 5-month, or 6- or 8-month, or 9- or 11-month, period, taxable income shall be determined from the beginning of the taxable year to the close of the accounting period ending immediately before the termination date of the applicable 3-month, or 3- or 5- month, or 6- or 8-month, or 9- or 11-month, period and to the close of the accounting period within which such termination date falls. There shall be determined that portion of the difference between the two amounts of taxable income so determined which bears the same ratio to the total difference between such amounts as the number of days from the close of the first such accounting period to the close of such applicable 3-month, or 3- or 5-month, or 6- or 8-month, or 9- or 11-month, period bears to the total number of days between the termination dates of such two accounting periods. The portion of the difference between such amounts so determined shall then be added to (or subtracted from) taxable income determined to the close of the first such accounting period to determine taxable income for such applicable 3-month, or 3- or 5-month, or 6- or 8-month, or 9- or 11-month, period. For example, a taxpayer whose taxable year consists of 52 or 53 weeks in accordance with section 441(f) has a taxable year beginning on December 26, 1956, and thirteen 4-week accounting periods are employed in determining taxable income. Taxable income from December 26, 1956, to the close of the 4-week accounting period ending on June 11, 1957, is $200,000, and taxable income from December 26, 1956, to the close of the 4-week accounting period ending on July 9, 1957, is $228,000. Taxable income for the 6-month period ending on June 30, 1957, is $219,000 ($200,000+(19×28,000 ÷28)).

(b) *Meaning of terms.* (1) For the purpose of the exceptions described in paragraph (a) of this section, the term

tax means the excess of the tax imposed by section 11 or 1201(a), or subchapter L, chapter 1 of the Code, whichever is applicable, over the sum of $100,000 plus the credits against tax allowed by sections 32, 33, and 38.

(2) The credits against the tax allowed by sections 32, 33, and 38, are:

(i) In the case of the exception described in paragraph (a)(1) of this section, such credits shown on the return for the preceding taxable year,

(ii) In the case of the exception described in paragraph (a)(2) of this section, such credits shown on the return for the preceding taxable year, except that if the amount of any such credits would be affected by any change in rates, the credits shall be determined by reference to the rates applicable to the current taxable year, and

(iii) In the case of the exception described in paragraph (a)(3) of this section, such credits computed under the law and rates applicable to the current taxable year.

The provisions of subdivision (ii) of this subparagraph may be illustrated by the following example:

Example. Assume that during the taxable year within which the normal tax rate in section 11 changes from 30 percent to 25 percent, Corporation X has an underpayment of estimated tax. One-fourth of the taxable income of Corporation X for the taxable year preceding that in which such underpayment occurs was from sources within foreign country Y. The return of Corporation X for such preceding year shows taxable income of $325,000 and a tax, without regard to any credits, of $163,500. The credit allowed by section 33 on account of taxes paid to foreign country Y may not exceed one-fourth of such amount, or $40,875, under section 904. The tax for the preceding year, computed by using the rates applicable to the year during which the underpayment occurs, would be reduced to $147,250 and the limitation under section 904 on the credit allowed under section 33 for taxes paid to foreign country Y would be reduced to $36,812.50, for purposes of determining the applicability of the exception described in paragraph (a)(2) of this section. Therefore, the exception described in paragraph (a)(2) of this section will be applicable if, on or before the date prescribed for such payment, the total amount paid by Corporation X equals or exceeds the amount which would have been required to be paid by such date if the estimated tax were $10,437.50 ($147,250 less ($100,000÷$36,812.50)).

(3) For the purpose of the exceptions described in paragraphs (a) (1) and (2) of this section, the term ''return for the preceding taxable year'' means the income tax return for such year which is required by section 6012(a)(2).

(c) *Examples.* The application of the exceptions to the imposition of the addition to tax may be illustrated by examples employing the following statement of facts:

STATEMENT OF FACTS

Y, a corporation reporting on a calendar year basis, filed a declaration on April 15, 1965, showing an estimated tax of $47,100 for its taxable year ending December 31, 1965. The first installment of 4 percent of the estimated tax or $1,884 was paid with the filing of the declaration, the second installment in the same amount was paid on June 15, 1965, and the third and fourth installments of $11,775 (25 percent of the estimated tax) each were paid on September 15, 1965, and December 15, 1965, respectively. Y reported a tax liability of $175,900 on its return due March 15, 1966. There was an underpayment in the amount of $241.20 on each of the first and second installment dates and $1,507.50 on each of the third and fourth installments dates determined as follows:

(1) Tax as defined in paragraph (b) of this section ($175,900 – $100,000)	$75,900.00
(2) 70% of item (1)	53,130.00
(3) 4% of item (2)	2,125.20
(4) Deduct amount paid on each of the first and second installment dates	1,884.00
(5) Amount of underpayment at each of the first and second installment dates (item (3) minus item (4))	241.20
(6) 25% of item (2)	13,282.50
(7) Deduct amount paid on each of the last two installment dates	11,775.00
(8) Amount of underpayment at each of the third and fourth installment dates (item (6) minus item (7))	1,507.50

The application of each exception described in paragraph (a) of this section is determined as follows:

(1) Assume Y reported a liability of $158,000 on its return for the taxable year ending December 31, 1964. If the estimated tax were $158,000 reduced by $100,000, or $58,000, the amount which would have been required to be paid on or before each of the first and second installment dates would be 4 percent of $58,000, or $2,320. The amount which would have been required to be paid on or before each of the third and fourth installment dates would be 25 percent of $58,000, or $14,500. Since these amounts exceed the corresponding amounts actually paid on each

installment date ($1,884 and $11,775, respectively), the exception described in paragraph (a) (1) of this section does not apply.

(2) As the corporation tax rates under section 11 are different for the taxable years ending December 31, 1964, and December 31, 1965, the amount of tax determined under paragraph (a)(2) of this section and the amounts required to be paid on or before each installment date must be determined. The tax liability determined on the basis of the calendar year 1965 rates but on the basis of the calendar year 1964 return is $151,900 and the estimated tax is $151,900 less $100,000, or $51,900. The amount which would have been required to be paid on or before each of the first and second installment dates would be 4 percent of $51,900, or $2,076, and the amount which would have been required to be paid on or before each of the third and fourth installment dates would be 25 percent of $51,900, or $12,975. Since these amounts exceed the corresponding amounts actually paid on each installment date ($1,884 and $11,775, respectively), the exception described in paragraph (a)(2) of this section does not apply.

(3) Y determined that its taxable income for the first 3, 5, 6, 8, 9, and 11 months was $87,500, $155,000, $185,000, $246,000, $288,000, and $341,000, respectively. The income for each period is annualized as follows:

$87,500×12÷3=$350,000
$155,000×12÷5=$372,000
$185,000×12÷6=$370,000
$246,000×12÷8=$369,000
$288,000×12÷9=$384,000
$341,000×12÷11=$372,000

To determine whether the installment payment made on April 15, 1965, equals or exceeds the amount which would have been required to be paid if the estimated tax were equal to 70 percent of the tax computed on the annualized income for the 3-month period, the following computation is necessary:

	3 months
(1) Annualized income	$350,000
(2) Tax on item (1) reduced by $100,000	61,500
(3) 70 percent of item (2)	43,050
(4) 4 percent of item (3)	1,722

To determine whether the installment payments made on or before June 15, 1965, equal or exceed the amount which would have been required to be paid if the estimated tax were equal to 70 percent of the tax computed on the annualized income for either the 3- or 5-month period, the following computation is necessary:

	3 months	5 months
(1) Annualized income	$350,000.00	$372,000.00
(2) Tax on item (1) reduced by $100,000	61,500.00	72,060.00
(3) 70 percent of item (2)	43,050.00	50,442.00
(4) 8 percent of item (3)	3,444.00	4,035.36

To determine whether the installment payments made on or before September 15, 1965, equal or exceed the amount which would have been required to be paid if the estimated tax were equal to 70 percent of the tax computed on the annualized income for either the 6- or 8-month period, the following computation is necessary:

	6 months	8 months
(1) Annualized income	$370,000.00	$369,000.00
(2) Tax on item (1) reduced by $100,000	71,100.00	70,620.00
(3) 70 percent of item (2)	49,770.00	49,434.00
(4) 33 percent of item (3)	16,424.10	16,313.22

To determine whether the installment payments made on or before December 15, 1965, equal or exceed the amount which would have been required to be paid if the estimated tax were equal to 70 percent of the tax computed on the annualized income for either the 9- or 11-month period, the following computation is necessary:

	9 months	11 months
(1) Annualized income	$384,000.00	$372,000.00
(2) Tax on item (1) reduced by $100,000	77,820.00	72,060.00
(3) 70 percent of item (2)	54,474.00	50,442.00
(4) 58 percent of item (3)	31,594.92	29,256.36

The total amounts of all payments of estimated tax actually paid on or before the installment dates of April 15, 1965, June 15, 1965, September 15, 1965, and December 15, 1965, are $1,884, $3,768, $15,543, and $27,318, respectively. Since the total amounts of estimated tax actually paid on the first and second installment dates (April 15, 1965, and June 15, 1965) exceed the amounts required to be paid on such dates if the estimated tax were 70 percent of the tax determined by placing on an annualized basis the taxable income for the first 3 months of the taxable year, the exception described in paragraph (a)(3) of this section applies and no addition to tax will be imposed for the installments paid on April 15, 1965, and June 15, 1965. However, since the total amount of all payments of estimated tax actually paid on or before the third and fourth installment dates (September 15, 1965, and December 15, 1965) does not equal or exceed the applicable alternative amounts, the addition to the tax with respect to the underpayment of the September 15, 1965, and December 15, 1965, installments must be imposed.

(d) *Determination of taxable income for portion of taxable year*. In determining the applicability of the exception described in paragraph (a)(3) of this section, there must be an accurate determination of the amount of income and deductions for the appropriate period, that is, for the first 3, 5, 6, 8, 9, or 11 months of the taxable year. See paragraph (d)(1) of § 1.6654–2 for a description of a similar requirement with respect to individuals.

[T.D. 6500, 25 FR 12151, Nov. 26, 1960, as amended by T.D. 6768, 29 FR 14926, Nov. 4, 1964]

§ 1.6655–2T Safe harbor for certain installments of tax due before July 1, 1987 (temporary).

(a) *Applicability*—(1) *Safe harbor*. The safe harbor provided by paragraph (b) of this section applies only to installment payments of corporate estimated tax required to be made before July 1, 1987, for taxable years beginning in 1987.

(2) *Subsequent payment*. The requirement that a corporation using the safe harbor provided by this section make a timely subsequent installment payment in accordance with paragraph (c) of this section applies with respect to the corporation's first installment payment (''the subsequent installment payment'') of estimated tax required to be made after the last payment computed under the safe harbor rule.

(3) *Section inapplicable to new corporation*. This section shall not apply in the case of any corporation whose first taxable year began after December 31, 1986.

(b) *Safe harbor for use of annualization exception*—(1) *In general*. A corporation computing an installment payment of estimated tax using the annualization exception provided in section 6655(d)(3) will not be subject to an addition to tax under section 6655 with respect to an installment payment of estimated tax that satisfies the requirements of this paragraph (b), except as provided in paragraph (c) of this section. For purposes of this paragraph (b)—

(i) A corporation shall assume that its annualized taxable income for the current year equals or exceeds 120 percent of the taxable income shown on its return for the preceding taxable year, and

(ii) The term ''tax'' as used in section 6655(d)(3) shall be defined by reference to section 6655(f) without regard to section 6655(f)(1) (B) and (C) (that is, without regard to the alternative minimum tax imposed by section 55 or the environmental tax imposed by section 59A).

(2) *Special rules for determining taxable income for preceding year*. For purposes of paragraph (b)(1)(i) of this section, the taxable income shown on the return of the corporation for its preceding taxable year shall be—

(i) Adjusted to eliminate any net operating loss deduction taken into account in that preceding year, and

(ii) Annualized, if that preceding year was of less than 12 months.

(3) *Credits taken into account*—(i) *In general*. In computing the amount of an installment payment under paragraph (b)(1) of this section, the corporation may take into account any credits against tax that are permitted to be taken into account under section 6655(d)(3) for the current taxable year.

(ii) *Foreign tax credit*. For purposes of paragraph (b)(3)(i) of this section, the amount of foreign tax credit that is permitted to be taken into account for the current taxable year is equal to the foreign tax credit allowed for the preceding taxable year multiplied by the fraction specified in the following sentence. The numerator of the fraction is the highest tax rate applicable for the taxable year under section 11, as adjusted under section 15, and the denominator is 46 percent. This alternative computation of the foreign tax credit is applicable only for purposes of computing a safe harbor installment payment under paragraph (b) of this section and cannot be applied for other estimated tax purposes.

(4) *Net operating loss carryover*. A corporation that has a net operating loss carryover as of the first day of the taxable year for which the estimated tax is being paid may use that carryover to reduce the annualized taxable income referred to in paragraph (b)(1)(i) of this section. For example, if a corporation with a net operating loss carryover of $3,000 had taxable income of $10,000 in

1986, it may use the carryover to reduce its annualized taxable income to $9,000, (($10,000 × 120%) − 3,000).

(c) *Corporation must bring aggregate payments to required level through timely subsequent installment*—(1) *In general.* A corporation using the safe harbor provided by paragraph (b) of this section shall make a timely subsequent installment payment of estimated tax in an amount sufficient to satisfy the requirements of either paragraph (c)(3) or paragraph (c)(4) of this section.

(2) *Applicable percentage.* For purposes of this paragraph (c), the applicable percentage is—

(i) 45 percent (50 percent × 90 percent), if the subsequent installment payment is the second installment payment for the taxable year, or

(ii) 67.5 percent (75 percent × 90 percent), if the subsequent installment payment is the third installment payment for the taxable year.

(3) *Annualization exception.* The subsequent installment payment of a corporation satisfies the requirements of this paragraph (c)(3) if the amount of the payment is sufficient to satisfy the requirements of section 6655(d)(3) with respect to all applicable taxes specified in section 6655(f). Thus, the corporation must determine its annualized taxable income under section 6655(d)(3)(A) (ii) or (iii), whichever is applicable, and compute the resulting tax. The resulting tax shall include the alternative minimum tax under section 55 and the environmental tax under section 59A and may take credits into account to the extent permitted under section 6655(d)(3). The sum of this subsequent installment payment and the earlier installment payment or payments of the corporation must equal or exceed the applicable percentage of the tax so computed. In determining whether the corporation has satisfied the requirements of section 6655(d)(3)(A) (ii) or (iii) with respect to the subsequent installment, the safe harbor provided in paragraph (b)(1) of this section shall not apply.

(4) *Installment payments equal to applicable percentage of tax shown on return.* The subsequent installment payment of a corporation satisfies the requirement of this paragraph (c)(4) if the sum of that payment and the earlier installment payment or payments of the corporation equals or exceeds the applicable percentage of the tax shown on the return of the corporation for the taxable year to which the installment payments relate. The tax shown on the return includes all taxes specified in section 6655(f).

(5) *Consequence of corporation's failure to satisfy requirements for subsequent installment*—(i) *In general.* If a corporation fails to satisfy the requirements set out in this paragraph (c), the corporation shall lose the benefit of the safe harbor provided by paragraph (b)(1) of this section.

(ii) *Limit on penalty.* The aggregate underpayment penalty with respect to any installment payment or payments for which a corporation loses the benefit of the safe harbor under paragraph (c)(5)(i) of this section shall be limited to the ''shortfall penalty amount.'' The shortfall penalty amount is the penalty that would be imposed under section 6655(a) if there were an underpayment of the subsequent installment payment equal to the excess of—

(A) The amount required to be paid, as determined under this paragraph (c), on or before the due date of the subsequent installment payment, over

(B) The amount actually paid on or before such date with respect to the subsequent installment payment.

For purposes of this determination, the period of the underpayment shall run from the due date of the subsequent installment payment until the earlier of the dates specified in section 6655(c) (1) or (2).

(iii) *Example.* The provisions of this paragraph (c)(5) may be illustrated by the following example:

Example. Corporation M, which uses the calendar year as its taxable year, relies on the safe harbor provided by paragraph (b) of this section for its first two installment payments of estimated tax for 1987. M is required by this paragraph (c) to make a timely subsequent installment payment of $1,000,000 by September 15, 1987, but M's actual installment payment by that date is only $990,000. Because of this shortfall, M loses the benefit of the safe harbor and is subject to underpayment penalties with respect to the first two installments. The aggregate penalties with respect to those two installments, however, cannot exceed the amount of the underpayment penalty to

which M would be subject if there were an underpayment of $10,000 with respect to the September 15, 1987, installment payment. Such penalties are independent of any penalty that may apply with respect to M's third installment payment under the normal rules of section 6655.

(d) *Example*. The provisions of this section may be illustrated by the following example:

Example. (i) Corporation X (which is not a life insurance company) uses as its taxable year a fiscal year ending on January 31 and is required to pay an installment of estimated income tax by May 15, 1987, for its taxable year beginning on February 1, 1987. On its return for the taxable year ending January 31, 1987, which was a year of 12 months, X reported taxable income of $10,000,000 ($9,000,000 of which was ordinary income and $1,000,000 of which was net capital gain) and did not claim any net operating loss deduction. As of February 1, 1987, X has no net operating loss carryforwards and no credit carryforwards. X has no credits against tax that are permitted to be taken into account under section 6655(d)(3) for 1987. If X uses the safe harbor provided in paragraph (b)(1) of this section, X must make by May 15, 1987, an installment payment of estimated tax of at least $1,037,836, computed as follows:

(1) Taxable income shown on return for taxable year ending on January 31, 1987	$10,000,000
(2) Annualized taxable income for taxable year ending January 31, 1988, determined pursuant to paragraph (b)(1) of this section (Item (1)x120%)	$12,000,000
(Note: 120%xordinary income of $9,000,000=$10,800,000; 120%xnet capital gain of $1,000,000=$1,200,000)	
(3) Tax on annualized taxable income (Item 2) using rates under section 11 and 1201, taking into account section 15, applicable to the taxable year ending January 31, 1988	$4,612,603
(4) Amount described in section 6655(d)(3)(A)(i) (Item (3)x22.5%)	$1,037,836

(ii) To preclude imposition of an addition to tax under section 6655 with respect to its May 15, 1987, installment payment, X must make by July 15, 1987, a second installment payment of estimated tax sufficient to bring its aggregate payments to the minimum level required under paragraph (c) of this section.

(iii) X may satisfy the requirements of paragraph (c)(3) of this section by making a second installment payment sufficient to bring X within the exception provided in section 6655(d)(3). Thus, if X determines under that section that the aggregate of X's installment payments of estimated tax by July 15, 1987, must equal at least $3,000,000, X may obtain the benefit of the safe harbor provided in paragraph (b)(1) of this section with respect to the May 15, 1987, installment payment by making a timely second installment payment of $1,962,164 ($3,000,000—$1,037,836).

(iv) Even if X fails to satisfy the requirements of paragraph (c)(3) of this section, X may obtain the benefit of the safe harbor for the May 15, 1987, installment payment if X's second installment payment, when aggregated with the first payment, equals at least 45 percent of the tax (including the alternative minimum tax under section 55 and the environmental tax under section 59A) shown on X's return for X's taxable year beginning on February 1, 1987. Thus, if the tax shown on that return is $6,000,000, X's second installment payment under paragraph (c)(4) of this section must be at least $1,662,164, computed as follows:

45 percent of $6,000,000	$2,700,000
less first payment	1,037,836
Minimum second installment	$1,662,164

[T.D. 8132, 52 FR 10051, Mar. 30, 1987]

§ 1.6655–3 Short taxable years in the case of corporations.

(a) *In general*. The provisions of section 6655, with certain modifications relating to the application of subsection (d) thereof, which are explained in paragraph (b) of this section, are applicable in the case of a short taxable year for which a declaration is required to be filed. (See § 1.6016–4 for requirement of declaration for short taxable year.)

(b) *Rules as to application of section 6655(d)*. In any case in which the taxable year for which an underpayment of estimated tax exists is a short taxable year due to a change in annual accounting periods, in determining the tax:

(1) Shown on the return for the preceding taxable year (for purposes of section 6655(d)(1));

(2) Based on the current year's rates but otherwise on the basis of the facts shown on the return for the preceding taxable year and the law applicable to such year (for purposes of section 6655(d)(2)); or

(3) Computed by placing taxable income for a portion of the current year on an annual basis under section 6655(d)(3);

the tax will be reduced by multiplying it by the number of months in the short taxable year and dividing the resulting amount by 12. The application of the exception provided in section 6655(d)(3) shall be determined as if the estimated tax were 70 percent of the tax so reduced.

(c) *Preceding taxable year a short taxable year.* If ''the preceding taxable year'' referred to in section 6655(d)(2) was a short taxable year, the tax computed on the basis of the facts shown on the return for such preceding year, for purposes of determining the applicability of the exception described in section 6655(d)(2), shall be the tax computed on the annual basis in the manner described in section 443(b)(1) (prior to its reduction in the manner described in the last sentence thereof). If the tax rates for the taxable year with respect to which the underpayment occurs differ from the rates applicable to the preceding taxable year, the tax determined in accordance with the preceding sentence shall be recomputed using the rates applicable to the year with respect to which the underpayment occurs.

[T.D. 6500, 25 FR 12152, Nov. 26, 1960]

§ 1.6655–5 Addition to tax on account of excessive adjustment under section 6425.

(a) *In general.* (1) Section 6655(g) imposes an addition to the tax under chapter 1 of the Code in the case of any excessive amount (as defined in subparagraph (3) of this paragraph) of an adjustment under section 6425 which is made before the 15th day of the third month following the close of a taxable year beginning after December 31, 1967. This addition to tax is imposed whether or not there was reasonable cause for an excessive adjustment.

(2) If the amount of an adjustment under section 6425 is excessive, there shall be added to the tax under chapter 1 for the taxable year an amount determined at the annual rate referred to in the regulations under section 6621 upon the excessive amount from the date on which the credit is allowed or the refund paid to the 15th day of the third month following the close of the taxable year. A refund is paid on the date it is allowed under section 6407.

(3) The excessive amount is equal to the lesser of the amount of the adjustment or the amount by which (i) the income tax liability (as defined in section 6425(c) of the Code) for the taxable year, as shown on the return for the taxable year, exceeds (ii) the estimated income tax paid during the taxable year, reduced by the amount of the adjustment.

(4) The computation of the addition to the tax imposed by section 6655 is made independently of, and does not affect the computation of, any addition to the tax which a corporation may otherwise owe for an underpayment of an installment of estimated tax.

(5) The provisions of section 6655 may be illustrated by the following example:

Example. Corporation A, a calendar year taxpayer, had an underpayment as defined in section 6655(b) for its fourth installment of estimated tax which was due on December 15, 1968, in the amount of $10,000. Nevertheless, on January 1, 1969, corporation A filed an application for adjustment of overpayment of estimated income tax for 1968 in the amount of $20,000. On February 15, 1969, the Internal Revenue Service in response to the application, refunded $20,000 to Corporation A. On March 15, 1969, corporation A filed its 1968 tax return and made a payment in settlement of its total tax liability. Under section 6655(a), corporation A is subject to an addition to tax in the amount of $150 ($10,000×6 percent×3/12) on account of corporation A's December 15, 1968 underpayment. Under section 6655(g) corporation A is subject to an addition to tax in the amount of $100 ($20,000×6 percent ×1/2) on account of corporation A's excessive adjustment under section 6425. In determining the amount of the addition to tax under section 6655(a) for failure to pay estimated income tax, the excessive adjustment under section 6425 is not taken into account.

(6) An adjustment is generally to be treated as a reduction of estimated income tax paid as of the date of the adjustment. However, for purposes of §§ 1.6655–1 through 1.6655–3, the adjustment is to be treated as if not made in determining whether there has been any underpayment of estimated income tax and, if there is an underpayment,

the period during which the underpayment existed.

[T.D. 7059, 35 FR 14548, Sept. 17, 1970, as amended by T.D. 7384, 40 FR 49322, Oct. 22, 1975]

§ 1.6655–7 Special rules for estimating the corporate alternative minimum tax book income adjustment under the annualization exception.

(a) *In general.* For purposes of section 6655(e) (relating to the ''annualization exception'') a corporate taxpayer must take into account the tax imposed by section 55 (relating to the alternative minimum tax) and the tax imposed by section 59A (relating to the environmental tax). Thus, a taxpayer using the annualization exception must estimate alternative mimimum taxable income, including the book income adjustment, for the period of the taxable year that is annualized (the ''annualization period'').

(b) *Estimating the book income adjustment.* The book income adjustment for the annualization period is determined in accordance with the rules of § 1.56–1, except as otherwise provided in this section.

(c) *Applicable financial statement for the annualization period*—(1) *In general.* A taxpayer's applicable financial statement for an annualization period is the financial statement of highest priority described in section 56(f)(3)(A) and § 1.56–1(c) that is prepared for such annualization period by the date the installment payment is due. However, if a taxpayer reasonably expects to have a financial statement of higher priority for such period no later than 30 days after the date the installment payment is due, the taxpayer shall make a reasonable estimate of the adjusted net book income that will result from such statement, and such estimate shall be used as the taxpayer's adjusted net book income for that annualization period. If the date that is 30 days after the due date of the installment falls on a Saturday, Sunday or legal holiday, the 30-day period is extended to the immediately following day that is not a Saturday, Sunday or legal holiday. For example, an event arising subsequent to the installment due date that causes the taxpayer's estimate of net book income to be understated will not result in a recomputation of the book income adjustment for the annualization period, if, based on all the facts and circumstances at the time the installment payment was made, it was not reasonably foreseeable that the subsequent event would occur.

(2) *Example.* The provisions of this paragraph may be illustrated by the following example:

Example. A is a public corporation that is a calendar year taxpayer. A's first installment payment of estimated tax is due April 15. A uses the annualization exception under section 6655(e) in order to determine whether it is liable for an addition to tax due to an underpayment of estimated tax. In the case of the first installment, the applicable annualization period is the first three months of the taxable year. On April 15, A has an unaudited financial statement for the first three-month period that is used for credit purposes. By May 15, A will file a quarterly report, Form 10-Q, with the Securities and Exchange Commission. Since the financial statement filed with the SEC has higher priority than the unaudited statement and A can reasonably expect to have such statement no later than 30 days after the installment due date, A must make a reasonable estimate of the adjusted net book income that will result from such statement. This estimate shall be used as A's adjusted net book income for the annualization period.

(d) *Earnings and profits*—(1) *In general.* If an applicable financial statement is not available by the date a payment is due for an annualization period or reasonably expected to be available no later than 30 days after the payment is due under the rules of paragraph (c) of this section, current earnings and profits for the applicable annualization period must be used in lieu of net book income. See § 1.56–1(b)(5) for rules relating to computing current earnings and profits for purposes of computing the book income adjustment.

(2) *Election to use earnings and profits*—(i) *In general.* A taxpayer may elect to use current earnings and profits for the applicable annualization period if the taxpayer has only a statement for such period that is described in section 56(f)(3)(A)(iv) and § 1.56–1(c)(1)(iv) and th taxpayer has elected under the rules of section 56(f)(3)(B)(ii) and § 1.56–1(c)(2) to use current earnings

and profits to compute the book income adjustment for purposes of filing its annual Federal income tax return. Once the election has been made, current earnings and profits must be used for any annualization period for which the taxpayer has only an applicable financial statement described in section 56(f)(3)(A)(iv) and § 1.56–1(c)(1)(iv).

(ii) *Election during 1987 taxable year.* During its taxable year beginning in 1987, a taxpayer may elect to use current earnings and profits for an applicable annualization period even if the taxpayer has not elected to use current earnings and profits for purposes of computing its annual Federal income tax liability under section 56(f)(3)(B)(ii) and § 1.56–1(c)(2). In addition, a taxpayer electing in 1987 to use current earnings and profits for purposes of its installment payments of estimated tax is not required to use current earnings and profits to compute the book income adjustment when filing its annual Federal income tax return. However, unless an annual election under section 56(f)(3)(B)(ii) is made when filing the taxpayer's 1987 Federal income tax return, the election to use current earnings and profits for purposes of computing its estimated tax liability in taxable years beginning after 1987 is terminated.

(iii) *Manner of making election.* If a taxpayer elects to use current earnings and profits for the applicable annualization period under the rules of this section, the taxpayer must attach a statement to its Federal income tax return for the taxable year in which the election was made. The statement must include the electing taxpayer's name, address and taxpayer identification number, identify the election and indicate that it was made under the provisions of § 1.6655–7, state that the only financial statement of the taxpayer available for the annualization period is described in § 1.56–1(c)(1)(iv).

[T.D. 8307, 55 FR 33689, Aug. 17, 1990]

§ 1.6655(e)–1 Time and manner for making election under the Omnibus Budget Reconciliation Act of 1993.

(a) *Description.* Section 6655(e)(2)(C), as added by section 13225 of the Omnibus Budget Reconciliation Act of 1993 (Pub. L. 103–66, 107 Stat. 486), allows a corporate taxpayer to make an annual election to use a different annualization period to determine annualized income for purposes of paying any required installment of estimated income tax for a taxable year beginning after December 31, 1993.

(b) *Time and manner for making the election.* An election under section 6655(e)(2)(C) must be made on or before the date required for the payment of the first required installment for the taxable year. For a calendar or fiscal year corporation, Form 8842, Election to Use Different Annualization Periods for Corporate Estimated Tax, must be filed by the 15th day of the 4th month of the taxable year for which the election is to apply. Form 8842 must be filed with the Internal Revenue Service Center where the corporation files its income tax return.

(c) *Revocability of election.* The election described in this section is irrevocable.

(d) *Effective date.* The rules set forth in this section are effective December 12, 1996.

[T.D. 8688, 61 FR 65322, Dec. 12, 1996]

§ 1.6661–1 Addition to tax in the case of a substantial understatement of tax liability.

(a) *In general.* Section 6661 imposes an addition to tax (penalty) for an understatement of tax liability that constitutes a substantial understatement of income tax. This section prescribes the effective date of the penalty. The manner of computing understatements subject to the penalty is set forth in § 1.6661–2. The definition of ''substantial authority'' is set forth in § 1.6661–3. Rules concerning the adequacy of disclosure are set forth in § 1.6661–4. The treatment of ''tax shelters'' is provided in § 1.6661–5. The circumstances in which the penalty may or will be waived by the Commissioner are set forth in § 1.6661–6.

(b) *Effective date.* The penalty under section 6661 applies to returns the due date (determined without regard to extensions of the time for filing) of which is after December 31, 1982. The penalty does not apply to amended returns, so-called, if the due date for the return to

which the amended return relates (determined without regard to extensions) is before January 1, 1983.

[T.D. 8017, 50 FR 12014, Mar. 27, 1985]

§ 1.6661–2 Computation of penalty; meaning of terms.

(a) *Amount of penalty*. If there is a substantial understatement of income tax for a taxable year (as defined in paragraph (b) of this section), section 6661 imposes a penalty equal to 10 percent of the understatement of tax liability.

(b) *Substantial understatement*. The term *substantial understatement* means an understatement (as defined in paragraph (c) of this section) that exceeds the greater of—

(1) 10 percent of the tax required to be shown on the return for the taxable year (as defined in paragraph (d)(4) of this section); or

(2) $5,000 ($10,000 in the case of a corporation other than an S corporation (as defined in section 1361(a)(1)) or a personal holding company (as defined in section 542)).

(c) *Understatement*. The term *understatement* means the excess of—

(1) The amount of tax required to be shown on the return for the taxable year (as defined in paragraph (d)(4) of this section), over

(2) The amount of tax shown on the return for the taxable year (as defined in paragraph (d)(2) of this section), reduced by any rebate (as defined in paragraph (d)(3) of this section).

(d) *Determination of amounts*—(1) *Amount of tax*. For purposes of section 6661, the amount of tax is the amount of tax imposed by Subtitle A of the Code.

(2) *Tax shown on return*. For purposes of section 6661, the amount of tax shown on the return for the taxable year is determined with the adjustments prescribed in this paragraph (d)(2), without regard to the items described in paragraph (d)(5) of this section, without regard to any net operating loss carryback, tax credit carryback, capital loss carryback, or commodity futures loss carryback (''carryback''), and without regard to any amount of additional tax shown on a return (including an amended return, so-called) filed after the taxpayer is first contacted by the Internal Revenue Service concerning the tax liability of the taxpayer for the taxable year. See § 1.6661–6(c) for rules relating to waiver of the penalty if the taxpayer files a ''qualified amended return.'' If no return was filed for the taxable year or if the return (other than a return filed under section 6014) shows no tax due, the amount of tax shown on the return is considered to be zero. The amount of tax shown on the return for the taxable year is determined by computing the tax as if the following items (in addition to the items that were properly reported on the return) had received the proper tax treatment:

(i) Items (other than tax shelter items as defined in § 1.6661–5(c)) for which there is or was substantial authority for the treatment claimed (as provided in § 1.6661–3).

(ii) Items (other than tax shelter items as defined in § 1.6661–5(c)) with respect to which there is adequate disclosure (as provided in § 1.6661–4).

(iii) Tax shelter items (as defined in § 1.6661–5(c)) for which there is or was substantial authority for the treatment claimed (as provided in § 1.6661–3), and with respect to which the taxpayer reasonably believes that the tax treatment of the item was more likely than not the proper tax treatment (as provided in § 1.6661–5(d)).

(iv) Items taken into account in computing the amount of any net operating loss, unused tax credit, or net capital loss for a taxable year the return for which was due (determined without regard to extensions of time for filing) before January 1, 1983 (regardless of whether there is substantial authority or adequate disclosure with respect to such items).

(3) *Rebate*. For purposes of section 6661, the amount of a rebate is the rebate (within the meaning of section 6211(b)(2) and § 301.6211–1(f)), determined as if any items to which the rebate is attributable that are described in paragraphs (d)(2) (i) through (iv) of this section (in addition to the items that were properly reported on the return) had received the proper tax treatment.

(4) *Tax required to be shown*. For purposes of section 6661, the amount of tax required to be shown on the return for the taxable year is the amount of tax

imposed on the taxpayer for the taxable year determined without regard to items described in paragraph (d)(5) of this section and without regard to any allowable carryback that was not taken into account in computing the amount of a rebate for the taxable year.

(5) *Items disregarded*. The amount of tax shown on the return for the taxable year and the amount of tax required to be shown on the return for the taxable year are both determined without regard to—

(i) The credit under section 31 for tax withheld;

(ii) The credit under section 33 for tax withheld at source on nonresident aliens and foreign corporations;

(iii) Any credit resulting from the collection of amounts assessed under section 6851 as the result of a termination assessment;

(iv) Payments of tax or estimated tax by the taxpayer; and

(v) Any tax that the taxpayer is not required to assess on the return (such as the tax imposed by section 535 on the accumulated taxable income of a corporation).

(6) *Treatment of carryovers*—(i) *In general*. A net operating loss carryover, tax credit carryover, or capital loss carryover shall be treated for purposes of section 6661 as a credit or deduction in the year in which the carryover is taken into account. See paragraph (d)(2)(iv) of this section for rules applicable to carryovers from a taxable year the return for which was due (without regard to extensions of time for filing) before January 1, 1983.

(ii) *Carryovers treated as carrybacks*. For purposes of section 6661, a carryover to a taxable year shall be treated as a carryback rather than a carryover with respect to such year to the extent such carryover exceeds the amount of the carryover determined without taking into account carrybacks from taxable years subsequent to such years.

(e) *Examples*. The following examples illustrate the computation of an understatement:

Example (1). In 1983, An individual calendar year taxpayer, files a return for 1982, which shows taxable income of $18,200 and tax liability of $3,194. Subsequent adjustments on audit for 1982 increase taxable income to $51,500 and tax liability to $17,068. There was substantial authority for an item resulting in an adjustment that increases taxable income by $5,300. The item is not a tax shelter item. In computing the amount of the understatement, the amount of tax shown on A's return is determined as if the item for which there was substantial authority had been given the proper tax treatment. Thus, the amount of tax that is treated as shown on A's return is $4,837 (the tax on $23,500) ($18,200 taxable income actually shown on A's return plus $5,300, the amount of the adjustment for which there was substantial authority). The amount of the understatement is $12,231 ($17,068 (the amount of tax required to be shown) less $4,837 (the amount of tax treated as shown on A's return after adjustment for the item for which there was substantial authority)). Because the understatement exceeds the greater of 10 percent of the tax required to be shown on the return for the year ($1,707 ($17,068×.10)) or $5,000, A has a substantial understatement of income tax for the year. The amount of section 6661 penalty is $1,223.10 (.10×$12,231).

Example (2). Corporation X was formed on January 1, 1982. In 1983, X adopts a calendar taxable year and files a return for 1982 showing a tax liability of $10,000. In 1984, X determines that it has an unused investment tax credit for taxable year 1983 in the amount of $20,000. X files an amended return, so-called, for taxable year 1982 claiming an investment tax credit carryback of $20,000 and receives a rebate of $10,000 (the tax liability shown on X's original return for taxable year 1982). On audit for taxable years 1982 and 1983, adjustments increase tax liability for 1982 to $24,000, and decrease the unused investment tax credit for 1983 to $8,000. There was not substantial authority and X did not make adequate disclosure with respect to the items comprising the 1982 adjustments, but there was substantial authority for $1,000 of the $12,000 investment tax credit disallowed for 1983. The amount of the section 6661 penalty for 1982 is computed as follows:

(i) The amount of tax required to be shown on the return for 1982 is $16,000 (*i.e.*, the tax liability as adjusted on audit ($24,000) reduced by the allowable tax credit carryback taken into account in computing the amount of the rebate ($8,000)).

(ii) The amount of tax shown on the return is $10,000 (*i.e.*, the tax shown on the return without adjustment for carryback of the investment tax credit).

(iii) The amount of the rebate is $9,000 (i.e., the amount of the rebate determined as if the items described in paragraph (d)(2)(i) of this section ($1,000 item for which there was substantial authority) had received the proper tax treatment ($10,000 − $1,000=$9,000)).

(iv) The understatement is $15,000 (*i.e.*, the excess of the tax required to be shown

($16,000) over the tax shown reduced by the rebate ($10,000 − $9,000=$1,000)).

(v) Since the understatement exceeds the greater of 10 percent of the tax required to be shown or $10,000, X has a substantial understatement of income tax for the year. The amount of the section 6661 penalty is $1,500 (.10 x $15,000).

Example (3). Corporation Y was formed on January 1, 1982. In 1983, Y adopts a calendar taxable year and files a return for 1982 showing tax liability of $50,000. Y subsequently determines that it has unused investment tax credits in the amount of $20,000 for taxable year 1983, $20,000 for taxable year 1984, and $37,000 for taxable year 1985. Y files an amended return, so-called, for taxable year 1982 claiming investment tax credit carrybacks of $77,000 and receives a rebate of $50,000 (the tax liability shown on Y's original return for 1982). On audit for taxable years 1982, 1983, 1984, and 1985, the only adjustments decrease the unused investment tax credit for taxable year 1983 to $5,000, and the unused investment tax credit for 1984 to $8,000. There was not substantial authority and X did not make adequate disclosure with respect to the items comprising the 1983 and 1984 adjustments. The amount of the section 6661 penalty for 1982 is computed as follows:

(i) The amount of the tax required to be shown on the return for 1982 is $27,000 (*i.e.*, the original tax liability ($50,000) reduced by the allowable carrybacks taken into account in computing the amount of the rebate ($5,000+$8,000+$10,000=$23,000)).

(ii) The amount of the tax shown on the return is $50,000 (*i.e.*, the tax shown on the return without adjustment for carryback of the investment tax credit).

(iii) The amount of the rebate is $50,000 (*i.e.*, the amount of the rebate determined as if any items described in paragraph (d)(2)(i)–(iv) of this section ($0) had received the proper tax treatment ($50,000 − 0=$50,000)).

(iv) The understatement is $27,000 (*i.e.*, the excess of the tax required to be shown ($27,000) over the tax shown reduced by the rebate ($50,000 − $50,000=0)).

(v) Since the understatement exceeds the greater of 10 percent of the tax required to be shown or $10,000, Y has a substantial understatement of income tax for the year. The amount of the section 6661 penalty is $2,700 (.10 x $27,000).

(f) *Coordination with penalty for valuation overstatments*—(1) *In general.* The amount of the penalty imposed under section 6661 shall be determined without taking into account the portion of the substantial understatement on which the penalty under section 6659 (relating to valuation overstatements) has been imposed. The portion of the understatement on which the penalty under section 6659 has been imposed is taken into account, however, in determining whether there is a substantial understatement of tax. For purposes of section 6661, a penalty under section 6659 is not considered to have been imposed to the extent that the penalty is waived under the authority of section 6659(e). If a penalty is imposed under section 6659, the amount to which the section 6661 penalty applies is the amount by which the understatement exceeds the amount of the underpayment attributable to a valuation overstatement as determined under section 6659.

(2) *Example.* The following example illustrates the coordination of the penalties under sections 6659 and 6661:

Example. In 1983, A, an individual calendar year taxpayer, files a return for 1982 which shows taxable income of $40,000 and tax liability of $11,408. Subsequent adjustments on audit for 1982 increases taxable income to $70,000 and tax liability to $26,318. The increase in taxable income is attributable to a $20,000 adjustment for a valuation overstatement and a $10,000 adjustment not related to a valuation overstatement. There are no adjustments under paragraph (d)(2) of this section. Since the amount of the understatement, $14,910 ($26,318–$11,408), exceeds the greater of $2,631.80 (10 percent of the tax required to be shown) or $5,000, there is a substantial understatement. Assume that under section 6659 the $20,000 adjustment for the valuation overstatement results in a $10,000 underpayment attributable to a valuation overstatement on which the section 6659 penalty is imposed. The amount of the understatement on which the section 6661 penalty is imposed is $4,910. (The amount by which the $14,910 understatement exceeds the $10,000 underpayment to which the section 6659 penalty applies.) The amount of the section 6661 penalty is $491 ($4,910×.10).

[T.D. 8017, 50 FR 12014, Mar. 27, 1985]

§ 1.6661–3 Substantial authority.

(a) *General rule*—(1) *Effect of having substantial authority.* If there is or was substantial authority for the tax treatment of an item (other than a tax shelter item as defined in § 1.6661–5(c)), the item is treated as if it were shown properly on the return for the taxable year in computing the amount of tax shown on the return. Thus, for purposes of section 6661, the tax attributable to the item is not included in

the understatement for the year. (See paragraph (d)(2) of § 1.6661–2.)

(2) *Substantial authority standard.* The substantial authority standard is less stringent than a ''more likely than not'' standard (that is, a greater than 50-percent likelihood of being upheld in litigation), but stricter than a reasonable basis standard (the standard which, in general, will prevent imposition of the penalty under section 6653 (a), relating to negligence or international disregard of rules and regulations). Thus, a position with respect to the tax treatment of an item that is arguable but fairly unlikely to prevail in court would satisfy a reasonable basis standard, but not the substantial authority standard.

(b) *Determination of whether substantial authority is present*—(1) *Evaluation of authorities.* There is substantial authority for the tax treatment of an item only if the weight of the authorities supporting the treatment is substantial in relation to the weight of authorities supporting contrary positions. All authorities relevant to the tax treatment of an item, including the authorities contrary to the treatment, are taken into account in determining whether substantial authority exists and the weight of those authorities is determined in light of the pertinent facts and circumstances in the manner prescribed in paragraph (b)(3) of this section. There may be substantial authority for more than one position with respect to the same item. The taxpayer's belief that the authorities with respect to the tax treatment of an item constitute substantial authority is not taken into account in determining whether there is substantial authority.

(2) *Types of authority.* In determining whether there is substantial authority (other than in cases described in paragraph (b) (4) (i) of this section), only the following will be considered authority. Applicable provisions of the Internal Revenue Code and other statutory provisions; temporary and final regulations construing such statutes; court cases; administrative pronouncements (including revenue rulings and revenue procedures); tax treaties and regulations thereunder, and Treasury Department and other official explanations of such treaties; and Congressional intent as reflected in committee reports, joint explanatory statements of managers included in conference committee reports, and floor statements made prior to enactment by one of a bill's managers. Conclusions reached in treatises, legal periodicals, legal opinions or opinions rendered by other tax professionals, descriptions of statutes prepared after enactment (such as ''General Explanations'' prepared by the Staff of the joint Committee on Taxation), general counsel memoranda (other than those published in pre-1955 volumes of the Cumulative Bulletin), actions on decisions, technical memoranda, written determinations (except as provided in paragraph (b)(4)(i) of this section), and proposed regulations are not authority. The authorities underlying such expressions of opinion where applicable to the facts of a particular case, however, may give rise to substantial authority for the tax treatment of an item. (See § 1.6661–6(b), however, regarding waiver of the penalty when the taxpayer relies on proposed regulations.)

(3) *Nature of analysis.* Except as otherwise provided in this section, the weight of the authorities for the tax treatment of an item is determined by the same analysis that a court would be expected to follow in evaluating the tax treatment of the item. Thus, the weight of authorities depends on their persuasiveness and relevance as well as their source. For example, a case or revenue ruling having some facts in common with the tax treatment at issue would not be considered particularly relevant if the authority is materially distinguishable on its facts, or is otherwise inapplicable to the tax treatment at issue. Similarly, an authority that merely states a conclusion ordinarily would be given less weight than an authority that reaches its conclusion by cogently relating the applicable law to pertinent facts. There may be substantial authority for the tax treatment of an item despite the absence of certain types of authority. Thus, a taxpayer may have substantial authority for a position that is supported only by a well-reasoned construction of the applicable statutory provision.

(4) *Special rules*—(i) *Written determinations*. There is substantial authority for the tax treatment of an item if the treatment is supported by the holding of a ruling or a determination letter (as defined in § 301.6110–2 (d) and (e)) issued to the taxpayer, by the holding of a technical advice memorandum in which the taxpayer is named, or by an affirmative statement in a revenue agent's report with respect to a prior taxable year of the taxpayer (''written determinations''). The preceding sentence shall not apply, however, if there has been a misstatement or omission of a material fact, the facts that subsequently develop are materially different from the facts on which the written determination was based, or authority supporting a contrary position has arisen since the date of the written determination.

(ii) *Taxpayer's jurisdiction*. The applicability of court cases to the taxpayer by reason of the taxpayer's residence in a particular jurisdiction is not taken into account in determining whether there is substantial authority for the tax treatment of an item. Notwithstanding the preceding sentence, however there is substantial authority for the tax treatment of an item if the treatment is supported by controlling precedent of a United States Court of Appeals to which the taxpayer has a right of appeal with respect to the item.

(iii) *When substantial authority determined*. For purposes of section 6661, there is substantial authority for the tax treatment of an item if there is substantial authority at the time the return containing the item is filed or there was substantial authority on the last day of the taxable year to which the return relates.

[T.D. 8017, 50 FR 12016, Mar. 27, 1985]

§ 1.6661–4 Disclosure of certain information.

(a) *In general*. Items (other than tax shelter items as defined in § 1.6661–5(c)) for which there is adequate disclosure are treated as if such items were shown properly on the return for the taxable year in computing the amount of tax shown on the return. Thus, for purposes of section 6661, the tax attributable to such items is not included in the understatement for the year. (See paragraph (d)(2) of § 1.6661–2.) Disclosure is adequate with respect to the tax treatment of an item on a return only if it is made on such return or in a statement attached thereto. Thus, disclosure with respect to a recurring item, such as the basis of recovery property, made on a return or statement attached thereto for one taxable year is not adequate disclosure with respect to the item for any other taxable year. (See paragraph (d) of this section for special rules relating to disclosure with respect to carrybacks and carryovers.)

(b) *Disclosure in attached statement*—(1) *In general*. Disclosure will be adequate with respect to an item (or group of similar items, such as the specific deduction of business bad debts or the deduction of amounts paid or incurred for supplies by a taxpayer engaged in business), if it is made on a properly completed Form 8275 or if it takes the form of a statement attached to the return that includes the following:

(i) A caption identifying the statement as disclosure under section 6661.

(ii) An identification of the item (or group of similar items) with respect to which disclosure is made.

(iii) The amount of the item (or group of similar items).

(iv) The facts affecting the tax treatment of the item (or group of similar items) that reasonably may be expected to apprise the Internal Revenue Service of the nature of the potential controversy concerning the tax treatment of the item (or items).

(2) *Disclosure of legal issue*. In lieu of setting forth the facts affecting the tax treatment of an item (or group of similar items) in accordance with paragraph (b)(1)(iv) of this section, the taxpayer may set forth a concise description of the legal issue presented by such facts.

(3) A concise description of the taxpayer's legal position with respect to the items.

(4) *Requirement of particularity*. Disclosure is not adequate with respect to an item (or group of similar items) if it consists of undifferentiated information that is not arranged in a manner that reasonably may be expected to apprise the Internal Revenue Service of

the identity of the item, its amount, and the nature of the potential controversy concerning the item (or items). For example, attachment to the return of an acquisition agreement generally will not constitute adequate disclosure of the issues involved in determining the basis of certain acquired assets.

(c) *Disclosure on return.* The Commissioner may by revenue procedure prescribe the circumstances in which information provided on the return in accordance with the applicable forms and instructions will be adequate disclosure for purposes of section 6661.

(d) *Carryovers and carrybacks.* In the case of a carryover or carryback attributable to the tax treatment of an item on a return to which section 6661 applies (see paragraph (b) of § 1.6661–1 and paragraph (d)(2)(iv) of § 1.6661–2), disclosure is adequate with respect to the item only if it is made on the return for the taxable year in which the item arises or in a statement attached thereto. In such a case, disclosure with respect to the item is not required on the return for the taxable year in which the carryover or carryback attributable to the item is taken into account.

(e) *Pass-through entities.* In the case of items attributable to a pass-through entity (''pass-through items''), disclosure regarding the tax treatment of such items should be made on the return of the entity or on an attachment thereto. For this purpose, a pass-through entity is a partnership, an S corporation (as defined in section 1361(a)(1)), an estate, a trust, a regulated investment company (as defined in section 851(a)), or a real estate investment trust (as defined in section 856(a)). A taxpayer (partner, shareholder, or beneficiary) also may make adequate disclosure with respect to a pass-through item, however, if the taxpayer files a separate statement in duplicate, one copy attached to and filed with the taxpayer's return and the other copy filed with the Internal Revenue Service Center with which the return of the entity is required to be filed. Each statement filed shall relate to the pass-through items of only one entity and shall include the following:

(1) An identification of the taxpayer and the entity by name, address, and taxpayer identification number.

(2) The taxable year of the entity to which the disclosure relates.

(3) An identification of the items with respect to which the taxpayer has made disclosure under this paragraph.

(4) Such additional information as would be required for adequate disclosure with respect to the items under paragraphs (a), (b), and (d) of this section.

(5) A notation to the effect that the statement is to be associated with the return of the entity.

[T.D. 8017, 50 FR 12017, Mar. 27, 1985]

§ 1.6661–5 Items relating to tax shelters.

(a) *In general.* (1) Tax shelter items (as defined in paragraph (c) of this section) are treated as if such items were shown properly on the return for the taxable year in computing the amount of tax shown on the return if—

(i) There is or was substantial authority for the tax treatment of the items (as provided in § 1.6661–3); and

(ii) The taxpayer reasonably believes at the time the return is filed that the tax treatment claimed is more likely than not the proper tax treatment of the items (see paragraph (d) of this section).

Thus, for purposes of section 6661, the tax attributable to such items is not included in the understatement for the year. (See paragraph (d)(2) of § 1.6661–2.)

(2) Disclosure (whether or not adequate under § 1.6661–4) with respect to tax shelter items (as defined in paragraph (c) of this section) does not affect the amount of the understatement.

(b) *Tax shelter*—(1) *In general.* For purposes of section 6661, the term ''tax shelter'' means—

(i) A partnership or other entity (such as a corporation or trust),

(ii) An investment plan or arrangement, or

(iii) Any other plan or arrangement, if the principal purpose of the entity, plan, or arrangement, based on objective evidence, is the avoidance or evasion of Federal income tax. The principal purpose of an entity, plan or arrangement is the avoidance or evasion of Federal income tax if that purpose

exceeds any other purpose. See §1.269–3(a). Typical of tax shelters are transactions structured with little or no motive for the realization of economic gain, and transactions that utilize the mismatching of income and deductions, overvalued assets or assets with values subject to substantial uncertainty, nonrecourse financing, financing techniques which do not conform to standard commercial business practices, or the mischaracterization of the substance of the transaction. The existence of economic substance does not of itself establish that a transaction is not a tax shelter if the transaction includes other characteristics that indicate it is a tax shelter.

(2) *Principal purpose.* The principal purpose of an entity, plan or arrangement is not the avoidance or evasion of Federal income tax if the entity, plan or arrangement has as its purpose the claiming of exclusions from income, accelerated deductions or other tax benefits in a manner consistent with the statute and Congressional purpose. For example, an entity, plan or arrangement will not be considered to have as its principal purpose the avoidance or evasion of Federal income tax merely as a result of the following uses of tax benefits provided by the Internal Revenue Code: The claiming of the investment credit under section 38; the purchase or holding of an obligation bearing interest which is excluded from gross income under section 103; entering into a safe-harbor lease transaction under section 168(f)(8); taking an accelerated cost recovery system (ACRS) allowance under section 168; taking the percentage depletion allowance under section 613 or section 613A; deducting intangible drilling and development costs as expenses under section 263(c); establishing a qualified retirement plan under the provisions of sections 401–409A, claiming the possession tax credit under section 936; or claiming tax benefits available by reason of an election under section 992 to be taxed as a domestic international sales corporation (DISC), under section 927(f)(1) to be taxed as a foreign sales corporation (FSC), or under section 1362 to be taxed as an S corporation.

(c) *Tax shelter item.* An item of income, gain, loss, deduction or credit will be considered a ''tax shelter item'' if the item is directly or indirectly attributable to the principal purpose of a tax shelter to avoid or evade Federal income tax. Thus, if a partnership is established for the principal purposes of the avoidance or evasion of Federal income tax by acquiring and overvaluing property for the purpose of claiming the investment credit under section 38, the investment credit with respect to the property would be a tax shelter item. However, a deduction claimed in connection with a separate transaction carried on by the same partnership is not a tax shelter item if the transaction does not constitute a plan or arrangement the principal purpose of which is the avoidance or evasion of tax.

(d) *Reasonable belief.* For purposes of section 6661, a taxpayer will be considered reasonably to believe that the tax treatment of an item is more likely than not the proper tax treatment if—

(1) The taxpayer analyzes the pertinent facts and authorities in the manner described in §1.6661–3(b)(3) and, in reliance upon that analysis, reasonably concludes that there is a greater than 50-percent likelihood that the tax treatment of the item will be upheld in litigation if the claimed treatment is challenged by the Internal Revenue Service; or

(2) The taxpayer in good faith relies on the opinion of a professional tax advisor, if the opinion is based on the tax advisor's analysis of the pertinent facts and authorities in the manner described in §1.6661–3(b)(3) and unambiguously states that the tax advisor concludes that there is a greater than 50-percent likelihood that the tax treatment of the item will be upheld in litigation if the claimed tax treatment is challenged by the Internal Revenue Service.

(e) *Pass-through entities.* In the case of tax shelter items (as defined in paragraph (e) of this section) attributable to a pass-through entity (as defined in §1.6661–4(e)), the actions described in paragraphs (d) (1) and (2) of this section, if taken by the entity, will be deemed to have been taken by the taxpayer and will be considered in determining whether the taxpayer reasonably believes that the tax treatment of

an item is more likely than not the proper tax treatment.

[T.D. 8017, 50 FR 12017, Mar. 27, 1985]

§ 1.6661–6 Waiver of penalty.

(a) *In general.* The Commissioner may waive all or part of the penalty imposed by section 6661 on a showing by the taxpayer that there was reasonable cause for the understatement (or part thereof) and that the taxpayer acted in good faith. The circumstances taken into account in determining whether to waive the penalty are described in paragraph (b) of this section. In addition, paragraph (c) of this section describes circumstances in which the penalty will always be waived.

(b) *Reasonable cause and good faith.* In making a determination regarding waiver of the penalty under section 6661, the most important factor in all cases not described in paragraph (c) of this section will be the extent of the taxpayer's effort to assess the taxpayer's proper tax liability under the law. For example, reliance on a position contained in a proposed regulation would ordinarily constitute reasonable cause and good faith. In addition, circumstances that may indicate reasonable cause and good faith include an honest misunderstanding of fact or law that is reasonable in light of the experience, knowledge, and education of the taxpayer. Moreover, a computational or transcriptional error would, in general, indicate reasonable cause and good faith. Reliance on an information return or on the advice of a professional (such as an appraiser, an attorney, or an accountant) would not necessarily constitute a showing of reasonable cause and good faith. Similarly, reliance on facts that, unknown to the taxpayer, are incorrect would not necessarily constitute a showing of reasonable cause and good faith. Reliance on an information return, professional advice, or other facts, however, would constitute a showing of reasonable cause and good faith if, under all the circumstances, such reliance was reasonable and the taxpayer acted in good faith. For example, reliance on erroneous information (such as an error relating to the cost of property, the date property was placed in service, or the amount of opening or closing inventory) inadvertently included in data compiled by the various divisions of a multidivisional corporation or in financial books and records prepared by those divisions would, in general, indicate reasonable cause and good faith, provided the corporation had internal controls and procedures, reasonable under the circumstances, that were designed to identify factual errors. Accordingly, waiver of the section 6661 penalty attributable to an understatement caused by such an error would be appropriate. Similarly, a taxpayer's reliance on erroneous information reported on a Form 1099 would indicate reasonable cause and good faith, and waiver would be appropriate, if the taxpayer did not know or have reason to know that the information was incorrect. Generally, a taxpayer would know or have reason to know that the information on a Form 1099 is incorrect only if such information is inconsistent with other information reported to the taxpayer or is inconsistent with the taxpayer's knowledge concerning the amount and rate of return of the payor's obligation. In the case of an understatement that is related to an item on the return of a pass-through entity (as defined in § 1.6661–4(e)), the good faith or lack of good faith of the entity generally will be imputed to the taxpayer that has the understatement. Any good faith imputed to the taxpayer under the preceding sentence, however, may be refuted by other factors indicating lack of good faith on the part of the taxpayer.

(c) *Automatic waiver; qualified amended returns*—(1) *In general.* If the taxpayer shows an additional amount of tax or makes adequate disclosure with respect to an item in the manner prescribed in § 1.6661–4 on a qualified amended return, the Commissioner will waive any penalty that would not have been imposed if the additional amount of tax had been shown or the adequate disclosure had been made on the return of the taxpayer. Thus, the entire penalty will be waived if there would not have been a substantial understatement (as defined in paragraph (b) of § 1.6661–2) had the taxpayer shown the additional amount of tax or made the adequate disclosure on the taxpayer's original return.

(2) *Qualified amended return*. For purposes of this paragraph, a ''qualified amended return'' is an amended return, so-called, or a timely request for an administrative adjustment under section 6227, filed after the due date of the return and before the earlier of—

(i) The time the taxpayer is first contacted by the Internal Revenue Service concerning an examination of the return; or

(ii) The time any person described in section 6700(a) (relating to the penalty for promoting abusive tax shelters) is first contacted by the Internal Revenue Service concerning an examination of an activity described in section 6700(a) with respect to which the taxpayer claimed any tax benefit on the return directly or indirectly through the entity, plan, or arrangement described in section 6700(a)(1)(A).

(3) *Pass-through entities*. For purposes of paragraph (c)(1) of this section, no account is taken of an additional amount of tax shown or disclosure made with respect to an item attributable to a pass-through entity (as defined in §1.6661–4(e)), unless the qualified amended return is filed by the taxpayer before the date such pass-through entity is first contacted by the Internal Revenue Service concerning an examination of the return of which the item is attributable.

(4) *Special rule*. The Commissioner may by revenue procedure prescribe the manner in which this section may apply to particular classes of taxpayers.

[T.D. 8017, 50 FR 12018, Mar. 27, 1985]

§1.6662–0 Table of contents.

This section lists the captions that appear in §§1.6662–1 through 1.6662–7.

§1.6662–1 Overview of the accuracy-related penalty.

§1.6662–2 Accuracy-related penalty.

(a) In general.
(b) Amount of penalty.
(1) In general.
(2) Increase in penalty for gross valuation misstatement.
(c) No stacking of accuracy–related penalty components.
(d) Effective dates.
(1) Returns due before January 1, 1994.
(2) Returns due after December 31, 1993.
(3) Special rules for tax shelter items.
(4) Special rule for reasonable basis.

§1.6662–3 Negligence or disregard of rules or regulations.

(a) In general.
(b) Definitions and rules.
(1) Negligence.
(2) Disregard of rules or regulations.
(3) Reasonable basis.
(c) Exception for adequate disclosure.
(1) In general.
(2) Method of disclosure.
(d) Special rules in the case of carrybacks and carryovers.
(1) In general.
(2) Transition rule for carrybacks to pre–1990 years.
(3) Example.

§1.6662–4 Substantial understatement of income tax.

(a) In general.
(b) Definitions and computational rules.
(1) Substantial.
(2) Understatement.
(3) Amount of the tax required to be shown on the return.
(4) Amount of the tax imposed which is shown on the return.
(5) Rebate.
(6) Examples.
(c) Special rules in the case of carrybacks and carryovers.
(1) In general.
(2) Understatements for carryback years not reduced by amount of carrybacks.
(3) Tainted items defined.
(i) In general.
(ii) Tax shelter items.
(4) Transition rule for carrybacks to pre–1990 years.
(5) Examples.
(d) Substantial authority.
(1) Effect of having substantial authority.
(2) Substantial authority standard.
(3) Determination of whether substantial authority is present.
(i) Evaluation of authorities.
(ii) Nature of analysis.
(iii) Types of authority.
(iv) Special rules.
(A) Written determinations.
(B) Taxpayer's jurisdiction.
(C) When substantial authority determined.
(v) Substantial authority for tax returns due before January 1, 1990.
(e) Disclosure of certain information.
(1) Effect of adequate disclosure.
(2) Circumstances where disclosure will not have an effect.
(3) Restriction for corporations.
(f) Method of making adequate disclosure.
(1) Disclosure statement.
(2) Disclosure on return.
(3) Recurring item.

(4) Carrybacks and carryovers.
(5) Pass-through entities.
(g) Items relating to tax shelters.
(1) In general.
(i) Noncorporate taxpayers.
(ii) Corporate taxpayers.
(A) In general.
(B) Special rule for transactions occurring prior to December 9, 1994.
(iii) Disclosure irrelevant.
(iv) Cross-reference.
(2) Tax shelter.
(i) In general.
(ii) Principal purpose.
(3) Tax shelter item.
(4) Reasonable belief.
(i) In general.
(ii) Facts and circumstances; reliance on professional tax advisor.
(5) Pass-through entities.

§ 1.6662–5 Substantial and gross valuation misstatements under chapter 1.

(a) In general.
(b) Dollar limitation.
(c) Special rules in the case of carrybacks and carryovers.
(1) In general.
(2) Transition rule for carrybacks to pre-1990 years.
(d) Examples.
(e) Definitions.
(1) Substantial valuation misstatement.
(2) Gross valuation misstatement.
(3) Property.
(f) Multiple valuation misstatements on a return.
(1) Determination of whether valuation misstatements are substantial or gross.
(2) Application of dollar limitation.
(g) Property with a value or adjusted basis of zero.
(h) Pass-through entities.
(1) In general.
(2) Example.
(i) [Reserved]
(j) Transactions between persons described in section 482 and net section 482 transfer price adjustments. [Reserved]
(k) Returns affected.

§ 1.6662–5T Substantial and gross valuation misstatements under chapter 1 (temporary).

(a) through (e)(3) [Reserved]
(e)(4) Tests related to section 482.
(i) Substantial valuation misstatement.
(ii) Gross valuation misstatement.
(iii) Property.
(f) through (i) [Reserved]
(j) Transactions between persons described in section 482 and net section 482 transfer price adjustments.

§ 1.6662–6 Transactions between persons described in section 482 and net section 482 transfer price adjustments.

(a) In general.
(1) Purpose and scope.
(2) Reported results.
(3) Identical terms used in the section 482 regulations.
(b) The transactional penalty.
(1) Substantial valuation misstatement.
(2) Gross valuation misstatement.
(3) Reasonable cause and good faith.
(c) Net adjustment penalty.
(1) Net section 482 adjustment.
(2) Substantial valuation misstatement.
(3) Gross valuation misstatement.
(4) Setoff allocation rule.
(5) Gross receipts.
(6) Coordination with reasonable cause exception under section 6664(c).
(7) Examples.
(d) Amounts excluded from net section 482 adjustments.
(1) In general.
(2) Application of a specified section 482 method.
(i) In general.
(ii) Specified method requirement.
(iii) Documentation requirement.
(A) In general.
(B) Principal documents.
(C) Background documents.
(3) Application of an unspecified method.
(i) In general.
(ii) Unspecified method requirement.
(A) In general.
(B) Specified method potentially applicable.
(C) No specified method applicable.
(iii) Documentation requirement.
(A) In general.
(B) Principal and background documents.
(4) Certain foreign to foreign transactions.
(5) Special rule.
(6) Examples.
(e) Special rules in the case of carrybacks and carryovers.
(f) Rules for coordinating between the transactional penalty and the net adjustment penalty.
(1) Coordination of a net section 482 adjustment subject to the net adjustment penalty and a gross valuation misstatement subject to the transactional penalty.
(2) Coordination of net section 482 adjustment subject to the net adjustment penalty and substantial valuation misstatements subject to the transactional penalty.
(3) Examples.
(g) Effective date.

§ 1.6662–7 Omnibus Budget Reconciliation Act of 1993 changes to the accuracy-related penalty.

(a) Scope.
(b) No disclosure exception for negligence penalty.
(c) Disclosure standard for other penalties is reasonable basis.

(d) Reasonable basis.

[T.D. 8381, 56 FR 67497, Dec. 31, 1991; T.D. 8381, 57 FR 6165, Feb. 20, 1992, as amended by T.D. 8519, 59 FR 4794, Feb. 2, 1994; T.D. 8533, 59 FR 12548, Mar. 17, 1994; T.D. 8551, 59 FR 35031, July 8, 1994; T.D. 8617, 60 FR 45663, Sept. 1, 1995; T.D. 8656, 61 FR 4879, Feb. 9, 1996; T.D. 8656, 61 FR 14248, Apr. 1, 1996; T.D. 8790, 63 FR 66434, Dec. 2, 1998]

§ 1.6662–1 Overview of the accuracy-related penalty.

Section 6662 imposes an accuracy-related penalty on any portion of an underpayment of tax required to be shown on a return that is attributable to one or more of the following:

(a) Negligence or disregard of rules or regulations;

(b) Any substantial understatement of income tax;

(c) Any substantial valuation misstatement under chapter 1;

(d) Any substantial overstatement of pension liabilities; or

(e) Any substantial estate or gift tax valuation understatement.

Sections 1.6662–1 through 1.6662–5 address only the first three components of the accuracy-related penalty, *i.e.*, the penalties for negligence or disregard of rules or regulations, substantial understatements of income tax, and substantial (or gross) valuation misstatements under chapter 1. The penalties for disregard of rules or regulations and for a substantial understatement of income tax may be avoided by adequately disclosing certain information as provided in § 1.6662–3(c) and §§ 1.6662–4(e) and (f), respectively. The penalties for negligence and for a substantial (or gross) valuation misstatement under chapter 1 may not be avoided by disclosure. No accuracy-related penalty may be imposed on any portion of an underpayment if there was reasonable cause for, and the taxpayer acted in good faith with respect to, such portion. The reasonable cause and good faith exception to the accuracy-related penalty is set forth in § 1.6664–4.

[T.D. 8381, 56 FR 67498, Dec. 31, 1991, as amended by T.D. 8617, 60 FR 45664, Sept. 1, 1995]

§ 1.6662–2 Accuracy-related penalty.

(a) *In general.* Section 6662(a) imposes an accuracy-related penalty on any portion of an underpayment of tax (as defined in section 6664(a) and § 1.6664–2) required to be shown on a return if such portion is attributable to one or more of the following types of misconduct:

(1) Negligence or disregard of rules or regulations (see § 1.6662–3);

(2) Any substantial understatement of income tax (see § 1.6662–4); or

(3) Any substantial (or gross) valuation misstatement under chapter 1 (''substantial valuation misstatement'' or ''gross valuation misstatement''), provided the applicable dollar limitation set forth in section 6662(e)(2) is satisfied (see § 1.6662–5).

The accuracy-related penalty applies only in cases in which a return of tax is filed, except that the penalty does not apply in the case of a return prepared by the Secretary under the authority of section 6020(b). The accuracy-related penalty under section 6662 and the penalty under section 6651 for failure to timely file a return of tax may both be imposed on the same portion of an underpayment if a return is filed, but is filed late. The fact that a return is filed late, however, is not taken into account in determining whether an accuracy-related penalty should be imposed. No accuracy-related penalty may be imposed on any portion of an underpayment of tax on which the fraud penalty set forth in section 6663 is imposed.

(b) *Amount of penalty*—(1) *In general.* The amount of the accuracy-related penalty is 20 percent of the portion of an underpayment of tax required to be shown on a return that is attributable to any of the types of misconduct listed in paragraphs (a)(1) through (a)(3) of this section, except as provided in paragraph (b)(2) of this section.

(2) *Increase in penalty for gross valuation misstatement.* In the case of a gross valuation misstatement, as defined in section 6662(h)(2) and § 1.6662–5(e)(2), the amount of the accuracy-related penalty is 40 percent of the portion of an underpayment of tax required to be shown on a return that is attributable to the gross valuation misstatement, provided the applicable

dollar limitation set forth in section 6662(e)(2) is satisfied.

(c) *No stacking of accuracy-related penalty components.* The maximum accuracy-related penalty imposed on a portion of an underpayment may not exceed 20 percent of such portion (40 percent of the portion attributable to a gross valuation misstatement), notwithstanding that such portion is attributable to more than one of the types of misconduct described in paragraph (a) of this section. For example, if a portion of an underpayment of tax required to be shown on a return is attributable both to negligence and a substantial understatement of income tax, the maximum accuracy-related penalty is 20 percent of such portion. Similarly, the maximum accuracy-related penalty imposed on any portion of an underpayment that is attributable both to negligence and a gross valuation misstatement is 40 percent of such portion.

(d) *Effective dates*—(1) *Returns due before January 1, 1994.* Section 1.6662–3(c) and §§1.6662–4 (e) and (f) (relating to methods of making adequate disclosure) (as contained in 26 CFR part 1 revised April 1, 1995) apply to returns the due date of which (determined without regard to extensions of time for filing) is after December 31, 1991, but before January 1, 1994. Except as provided in the preceding sentence and in paragraphs (d)(2), (3), and (4) of this section, §§1.6662–1 through 1.6662–5 apply to returns the due date of which (determined without regard to extensions of time for filing) is after December 31, 1989, but before January 1, 1994. To the extent the provisions of these regulations were not reflected in the statute as amended by the Omnibus Budget Reconciliation Act of 1989 (OBRA 1989), in Notice 90–20, 1990–1 C.B. 328, or in rules and regulations in effect prior to March 4, 1991 (to the extent not inconsistent with the statute as amended by OBRA 1989), these regulations will not be adversely applied to a taxpayer who took a position based upon such prior rules on a return filed before January 1, 1992.

(2) *Returns due after December 31, 1993.* Except as provided in paragraphs (d)(3) and (4) of this section and the last sentence of this paragraph (d)(2), the provisions of §§1.6662–1 through 1.6662–4 and §1.6662–7 (as revised to reflect the changes made to the accuracy-related penalty by the Omnibus Budget Reconciliation Act of 1993) and of §1.6662–5 apply to returns the due date of which (determined without regard to extensions of time for filing) is after December 31, 1993. These changes include raising the disclosure standard for the penalties for disregarding rules or regulations and for a substantial understatement of income tax from not frivolous to reasonable basis, eliminating the disclosure exception for the negligence penalty, and providing guidance on the meaning of reasonable basis. The Omnibus Budget Reconciliation Act of 1993 changes relating to the penalties for negligence or disregard of rules or regulations will not apply to returns (including qualified amended returns) that are filed on or before March 14, 1994, but the provisions of §§1.6662–1 through 1.6662–3 (as contained in 26 CFR part 1 revised April 1, 1995) relating to those penalties will apply to such returns.

(3) *Special rules for tax shelter items.* Sections 1.6662–4(g)(1) and 1.6662–4(g)(4) apply to returns the due date of which (determined without regard to extensions of time for filing) is after September 1, 1995. Except as provided in the last sentence of this paragraph (d)(3), §§1.6662–4(g)(1) and 1.6662–4(g)(4) (as contained in 26 CFR part 1 revised April 1, 1995) apply to returns the due date of which (determined without regard to extensions of time for filing) is on or before September 1, 1995 and after December 31, 1989. For transactions occurring after December 8, 1994, §§1.6662–4(g)(1) and 1.6662–4(g)(2) (as contained in 26 CFR part 1 revised April 1, 1995) are applied taking into account the changes made to section 6662(d)(2)(C) (relating to the substantial understatement penalty for tax shelter items of corporations) by section 744 of Title VII of the Uruguay Round Agreements Act, Pub. L. 103–465 (108 Stat. 4809).

(4) *Special rules for reasonable basis.* Section 1.6662–3(b)(3) applies to returns filed on or after December 2, 1998.

[T.D. 8381, 56 FR 67498, Dec. 31, 1991, as amended by T.D. 8617, 60 FR 45664, Sept. 1, 1995; T.D. 8790, 63 FR 66434, Dec. 2, 1998]

§ 1.6662–3 Negligence or disregard of rules or regulations.

(a) *In general.* If any portion of an underpayment, as defined in section 6664(a) and § 1.6664–2, of any income tax imposed under subtitle A of the Code that is required to be shown on a return is attributable to negligence or disregard of rules or regulations, there is added to the tax an amount equal to 20 percent of such portion. The penalty for disregarding rules or regulations does not apply, however, if the requirements of § 1.6662–3(c)(1) are satisfied and the position in question is adequately disclosed as provided in § 1.6662–3(c)(2), or to the extent that the reasonable cause and good faith exception to this penalty set forth in § 1.6664–4 applies. In addition, if a position with respect to an item is contrary to a revenue ruling or notice (other than a notice of proposed rulemaking) issued by the Internal Revenue Service and published in the Internal Revenue Bulletin, this penalty does not apply if the position has a realistic possibility of being sustained on its merits. See § 1.6694–2(b) of the preparer penalty regulations for a description of the realistic possibility standard.

(b) *Definitions and rules*—(1) *Negligence.* The term *negligence* includes any failure to make a reasonable attempt to comply with the provisions of the internal revenue laws or to exercise ordinary and reasonable care in the preparation of a tax return. ''Negligence'' also includes any failure by the taxpayer to keep adequate books and records or to substantiate items properly. A return position that has a reasonable basis as defined in paragraph (b)(3) of this section is not attributable to negligence. Negligence is strongly indicated where—

(i) A taxpayer fails to include on an income tax return an amount of income shown on an information return, as defined in section 6724(d)(1);

(ii) A taxpayer fails to make a reasonable attempt to ascertain the correctness of a deduction, credit or exclusion on a return which would seem to a reasonable and prudent person to be ''too good to be true'' under the circumstances;

(iii) A partner fails to comply with the requirements of section 6222, which requires that a partner treat partnership items on its return in a manner that is consistent with the treatment of such items on the partnership return (or notify the Secretary of the inconsistency); or

(iv) A shareholder fails to comply with the requirements of section 6242, which requires that an S corporation shareholder treat subchapter S items on its return in a manner that is consistent with the treatment of such items on the corporation's return (or notify the Secretary of the inconsistency).

(2) *Disregard of rules or regulations.* The term *disregard* includes any careless, reckless or intentional disregard of rules or regulations. The term ''rules or regulations'' includes the provisions of the Internal Revenue Code, temporary or final Treasury regulations issued under the Code, and revenue rulings or notices (other than notices of proposed rulemaking) issued by the Internal Revenue Service and published in the Internal Revenue Bulletin. A disregard of rules or regulations is ''careless'' if the taxpayer does not exercise reasonable diligence to determine the correctness of a return position that is contrary to the rule or regulation. A disregard is ''reckless'' if the taxpayer makes little or no effort to determine whether a rule or regulation exists, under circumstances which demonstrate a substantial deviation from the standard of conduct that a reasonable person would observe. A disregard is ''intentional'' if the taxpayer knows of the rule or regulation that is disregarded. Nevertheless, a taxpayer who takes a position contrary to a revenue ruling or a notice has not disregarded the ruling or notice if the contrary position has a realistic possibility of being sustained on its merits.

(3) *Reasonable basis.* Reasonable basis is a relatively high standard of tax reporting, that is, significantly higher than not frivolous or not patently improper. The reasonable basis standard is not satisfied by a return position that is merely arguable or that is merely a colorable claim. If a return position is reasonably based on one or more of the authorities set forth in § 1.6662–4(d)(3)(iii) (taking into account the relevance and persuasiveness of the

authorities, and subsequent developments), the return position will generally satisfy the reasonable basis standard even though it may not satisfy the substantial authority standard as defined in §1.6662–4(d)(2). (See §1.6662–4(d)(3)(ii) for rules with respect to relevance, persuasiveness, subsequent developments, and use of a well-reasoned construction of an applicable statutory provision for purposes of the substantial understatement penalty.) In addition, the reasonable cause and good faith exception in §1.6664–4 may provide relief from the penalty for negligence or disregard of rules or regulations, even if a return position does not satisfy the reasonable basis standard.

(c) *Exception for adequate disclosure*—(1) *In general*. No penalty under section 6662(b)(1) may be imposed on any portion of an underpayment that is attributable to a position contrary to a rule or regulation if the position is disclosed in accordance with the rules of paragraph (c)(2) of this section and, in case of a position contrary to a regulation, the position represents a good faith challenge to the validity of the regulation. This disclosure exception does not apply, however, in the case of a position that does not have a reasonable basis or where the taxpayer fails to keep adequate books and records or to substantiate items properly.

(2) *Method of disclosure*. Disclosure is adequate for purposes of the penalty for disregarding rules or regulations if made in accordance with the provisions of §§1.6662–4(f)(1), (3), (4), and (5), which permit disclosure on a properly completed and filed Form 8275 or 8275–R, as appropriate. In addition, the statutory or regulatory provision or ruling in question must be adequately identified on the Form 8275 or 8275–R, as appropriate. The provisions of §1.6662–4(f)(2), which permit disclosure in accordance with an annual revenue procedure for purposes of the substantial understatement penalty, do not apply for purposes of this section.

(d) *Special rules in the case of carrybacks and carryovers*—(1) *In general*. The penalty for negligence or disregard of rules or regulations applies to any portion of an underpayment for a year to which a loss, deduction or credit is carried, which portion is attributable to negligence or disregard of rules or regulations in the year in which the carryback or carryover of the loss, deduction or credit arises (the ''loss or credit year'').

(2) *Transition rule for carrybacks to pre-1990 years*. A 20 percent penalty under section 6662(b)(1) is imposed on any portion of an underpayment for a carryback year, the return for which is due (without regard to extensions) before January 1, 1990, if—

(i) That portion is attributable to negligence or disregard of rules or regulations in a loss or credit year; and

(ii) The return for the loss or credit year is due (without regard to extensions) after December 31, 1989.

(3) *Example*. The following example illustrates the provisions of paragraph (d) of this section. This example does not take into account the reasonable cause exception under §1.6664–4.

Example. Corporation M is a C corporation. In 1990, M had a loss of $200,000 before taking into account a deduction of $350,000 that M claimed as an expense in careless disregard of the capitalization requirements of section 263 of the Code. M failed to make adequate disclosure of the item for 1990. M reported a $550,000 loss for 1990 and carried back the loss to 1987 and 1988. M had reported taxable income of $400,000 for 1987 and $200,000 for 1988, before application of the carryback. The carryback eliminated all of M's taxable income for 1987 and $150,000 of taxable income for 1988. After disallowance of the $350,000 expense deduction and allowance of a $35,000 depreciation deduction with respect to the capitalized amount, the correct loss for 1990 was determined to be $235,000. Because there is no underpayment for 1990, the penalty for negligence or disregard of rules or regulations does not apply for 1990. However, as a result of the 1990 adjustments, the loss carried back to 1987 is reduced from $550,000 to $235,000. After application of the $235,000 carryback, M has taxable income of $165,000 for 1987 and $200,000 for 1988. This adjustment results in underpayments for 1987 and 1988 that are attributable to the disregard of rules or regulations on the 1990 return. Therefore, the 20 percent penalty rate applies to the 1987 and 1988 underpayments attributable to the disallowed carryback.

[T.D. 8381, 56 FR 67498, Dec. 31, 1991, as amended by T.D. 8617, 60 FR 45664, Sept. 1, 1995; T.D. 8790, 63 FR 66434, Dec. 2, 1998]

§ 1.6662–4 Substantial understatement of income tax.

(a) *In general.* If any portion of an underpayment, as defined in section 6664(a) and § 1.6664–2, of any income tax imposed under subtitle A of the Code that is required to be shown on a return is attributable to a substantial understatement of such income tax, there is added to the tax an amount equal to 20 percent of such portion. Except in the case of any item attributable to a tax shelter (as defined in paragraph (g)(2) of this section), an understatement is reduced by the portion of the understatement that is attributable to the tax treatment of an item for which there is substantial authority, or with respect to which there is adequate disclosure. General rules for determining the amount of an understatement are set forth in paragraph (b) of this section and more specific rules in the case of carrybacks and carryovers are set forth in paragraph (c) of this section. The rules for determining when substantial authority exists are set forth in § 1.6662–4(d). The rules for determining when there is adequate disclosure are set forth in § 1.6662–4 (e) and (f). This penalty does not apply to the extent that the reasonable cause and good faith exception to this penalty set forth in § 1.6664–4 applies.

(b) *Definitions and computational rules*—(1) *Substantial.* An understatement (as defined in paragraph (b)(2) of this section) is ''substantial'' if it exceeds the greater of—

(i) 10 percent of the tax required to be shown on the return for the taxable year (as defined in paragraph (b)(3) of this section); or

(ii) $5,000 ($10,000 in the case of a corporation other than an S corporation (as defined in section 1361(a)(1)) or a personal holding company (as defined in section 542)).

(2) *Understatement.* Except as provided in paragraph (c)(2) of this section (relating to special rules for carrybacks), the term ''understatement'' means the excess of—

(i) The amount of the tax required to be shown on the return for the taxable year (as defined in paragraph (b)(3) of this section), over

(ii) The amount of the tax imposed which is shown on the return for the taxable year (as defined in paragraph (b)(4) of this section), reduced by any rebate (as defined in paragraph (b)(5) of this section).

The definition of understatement also may be expressed as—

Understatement = X − (Y − Z)

where X = the amount of the tax required to be shown on the return; Y = the amount of the tax imposed which is shown on the return; and Z = any rebate.

(3) *Amount of the tax required to be shown on the return.* The ''amount of the tax required to be shown on the return'' for the taxable year has the same meaning as the ''amount of income tax imposed'' as defined in § 1.6664–2(b).

(4) *Amount of the tax imposed which is shown on the return.* The ''amount of the tax imposed which is shown on the return'' for the taxable year has the same meaning as the ''amount shown as the tax by the taxpayer on his return,'' as defined in § 1.6664–2(c), except that—

(i) There is no reduction for the excess of the amount described in § 1.6664–2(c)(1)(i) over the amount described in § 1.6664–2(c)(1)(ii), and

(ii) The tax liability shown by the taxpayer on his return is recomputed as if the following items had been reported properly:

(A) Items (other than tax shelter items as defined in § 1.6662–4(g)(3)) for which there is substantial authority for the treatment claimed (as provided in § 1.6662–4(d)).

(B) Items (other than tax shelter items as defined in § 1.6662–4(g)(3)) with respect to which there is adequate disclosure (as provided in § 1.6662–4 (e) and (f)).

(C) Tax shelter items (as defined in § 1.6662–4(g)(3)) for which there is substantial authority for the treatment claimed (as provided in § 1.6662–4(d)), and with respect to which the taxpayer reasonably believed that the tax treatment of the items was more likely than not the proper tax treatment (as provided in § 1.6662–4(g)(4)).

(5) *Rebate.* The term *rebate* has the meaning set forth in § 1.6664–2(e), except that—

(i) ''Amounts not so shown previously assessed (or collected without assessment)'' includes only amounts not so shown previously assessed (or collected without assessment) as a deficiency, and

(ii) The amount of the rebate is determined as if any items to which the rebate is attributable that are described in paragraph (b)(4) of this section had received the proper tax treatment.

(6) *Examples*. The following examples illustrate the provisions of paragraph (b) of this section. These examples do not take into account the reasonable cause exception under §1.6664–4:

Example 1. In 1990, Individual A, a calendar year taxpayer, files a return for 1989, which shows taxable income of $18,200 and tax liability of $2,734. Subsequent adjustments on audit for 1989 increase taxable income to $51,500 and tax liability to $12,339. There was substantial authority for an item resulting in an adjustment that increases taxable income by $5,300. The item is not a tax shelter item. In computing the amount of the understatement, the amount of tax shown on A's return is determined as if the item for which there was substantial authority had been given the proper tax treatment. Thus, the amount of tax that is treated as shown on A's return is $4,176, i.e., the tax on $23,500 ($18,200 taxable income actually shown on A's return plus $5,300, the amount of the adjustment for which there was substantial authority). The amount of the understatement is $8,163, i.e., $12,339 (the amount of tax required to be shown) less $4,176 (the amount of tax treated as shown on A's return after adjustment for the item for which there was substantial authority). Because the $8,163 understatement exceeds the greater of 10 percent of the tax required to be shown on the return for the year, i.e., $1,234 ($12,339 × .10) or $5,000, A has a substantial understatement of income tax for the year.

Example 2. Individual B, a calendar year taxpayer, files a return for 1990 that fails to include income reported on an information return, Form 1099, that was furnished to B. The Service detects this omission through its document matching program and assesses $3,000 in unreported tax liability. B's return is later examined and as a result of the examination the Service makes an adjustment to B's return of $4,000 in additional tax liability. Assuming there was neither substantial authority nor adequate disclosure with respect to the items adjusted, there is an understatement of $7,000 with respect to B's return. There is also an underpayment of $7,000. (See §1.6664–2.) The amount of the understatement is not reduced by imposition of a negligence penalty on the $3,000 portion of the underpayment that is attributable to the unreported income. However, if the Services does impose the negligence penalty on this $3,000 portion, the Service may only impose the substantial understatement penalty on the remaining $4,000 portion of the underpayment. (See §1.6662–2(c), which prohibits stacking of accuracy-related penalty components.)

(c) *Special rules in the case of carrybacks and carryovers*—(1) *In general*. The penalty for a substantial understatement of income tax applies to any portion of an underpayment for a year to which a loss, deduction or credit is carried that is attributable to a ''tainted item'' for the year in which the carryback or carryover of the loss, deduction or credit arises (the ''loss or credit year''). The determination of whether an understatement is substantial for a carryback or carryover year is made with respect to the return of the carryback or carryover year. ''Tainted items'' are taken into account with items arising in a carryback or carryover year to determine whether the understatement is substantial for that year.

(2) *Understatements for carryback years not reduced by amount of carrybacks*. The amount of an understatement for a carryback year is not reduced on account of a carryback of a loss, deduction or credit to that year.

(3) *Tainted items defined*—(i) *In general*. Except in the case of a tax shelter item (as defined in paragraph (g)(3) of this section), a ''tainted item'' is any item for which there is neither substantial authority nor adequate disclosure with respect to the loss or credit year.

(ii) *Tax shelter items*. In the case of a tax shelter item (as defined in paragraph (g)(3) of this section), a ''tainted item'' is any item for which there is not, with respect to the loss or credit year, both substantial authority and a reasonable belief that the tax treatment is more likely than not the proper treatment.

(4) *Transition rule for carrybacks to pre-1990 years*. A 20 percent penalty under section 6662(b)(2) is imposed on any portion of an underpayment for a carryback year, the return for which is due (without regard to extensions) before January 1, 1990, if—

(i) That portion is attributable to one or more ''tainted items'' (as defined in paragraph (c)(3) of this section) arising in a loss or credit year; and

(ii) The return for the loss or credit year is due (without regard to extensions) after December 31, 1989.

The preceding sentence applies only if the understatement in the carryback year is substantial. See *Example 2* in paragraph (c)(5) of this section.

(5) *Examples*. The following examples illustrate the rules of paragraph (c) of this section regarding carrybacks and carryovers. These examples do not take into account the reasonable cause exception under § 1.6664–4.

Example 1. (i) Corporation N, a calendar year taxpayer, is a C corporation. N was formed on January 1, 1987, and timely filed the following income tax returns:

[In dollars]

	Tax Year			
	1987	1988	1989	1990 (before NOLCO)
Taxable income	30,000	100,000	(300,000)	50,000
Tax liability	4,575	22,250	.....	7,500

(ii) During 1990, N files Form 1139, Corporation Application for Tentative Refund, to carry back the NOL generated in 1989 (NOLCB). N received refunds of $4,575 for 1987 and $22,250 for 1988.

(iii) For tax year 1990, N carries over $50,000 of the 1989 loss to offset $50,000 of income earned in 1990 and reduce taxable income to zero. N would have reported $7,500 of tax liability for 1990 if it were not for use of the net operating loss carryover (NOLCO). N assumes there is a remaining NOLCO of $120,000 to be applied for tax year 1991.

(iv) In June 1991, the Service completes its examination of the 1989 loss year return and makes the following adjustment:

Taxable income per 1989 return	($300,000)
Adjustment: Unreported income	310,000
Corrected taxable income	$10,000
Corrected tax liability	$1,500

(v) There was not substantial authority for N's treatment of the items comprising the 1989 adjustment and N did not make adequate disclosure.

(vi) As a result of the adjustment to the 1989 return, N had an understatement of $4,575 for tax year 1987; an understatement of $22,250 for tax year 1988; an understatement of $1,500 for tax year 1989; and an understatement of $7,500 for tax year 1990. Only the $22,250 understatement for 1988 is a substantial understatement, i.e., it exceeds the greater of (a) $2,225 (10 percent of the tax required to be shown on the return for the taxable year (.10 X $22,250)) or (b) $10,000. The underpayment for 1988 is subject to a penalty rate of 20 percent.

Example 2. The facts are the same as in *Example 1*, except that in addition to examining the 1989 return, the Service also examines the 1987 return and makes an adjustment that results in an understatement. (This adjustment is unrelated to the adjustment on the 1987 return for the disallowance of the NOLCB from 1989.) If the understatement resulting from the adjustment to the 1987 return, when combined with the understatement resulting from the disallowance of the NOLCB from 1989, exceeds the greater of (a) 10 percent of the tax required to be shown on the return for 1987 or (b) $10,000, the underpayment for 1987 will also be subject to a substantial understatement penalty. The portion of the underpayment attributable to the adjustment unrelated to the disallowance of the NOLCB will be subject to a penalty rate of 25 percent under former section 6661. The portion of the underpayment attributable to the disallowance of the NOLCB will be subject to a penalty rate of 20 percent under section 6662.

Example 3. Individual P, a calendar year single taxpayer, files his 1990 return reporting taxable income of $10,000 and a tax liability of $1,504. An examination of the 1990 return results in an adjustment for unreported income of $25,000. There was not substantial authority for P's failure to report the income, and P did not make adequate disclosure with respect to the unreported income. P's correct tax liability for 1990 is determined to be $7,279, resulting in an understatement of $5,775 (the difference between the amount of tax required to be shown on the return ($7,279) and the tax shown on the return ($1,504)). Because the understatement exceeds the greater of (a) $728 (10 percent of the tax required to be shown on the return (.10 × $7,279)) or (b) $5,000, the understatement is substantial. Subsequently, P files his 1993 return showing a net operating loss. The loss is carried back to his 1990 return, reducing his taxable income for 1990 to zero. However, the amount of the understatement for 1990 is not reduced on account of the NOLCB to that year. P is subject to the 20 percent penalty rate under section 6662 on the underpayment attributable to the substantial understatement for 1990, notwithstanding that the tax required to be shown on the return for that year, after application of the NOLCB, is zero.

(d) *Substantial authority*—(1) *Effect of having substantial authority*. If there is

substantial authority for the tax treatment of an item, the item is treated as if it were shown properly on the return for the taxable year in computing the amount of the tax shown on the return. Thus, for purposes of section 6662(d), the tax attributable to the item is not included in the understatement for that year. (For special rules relating to tax shelter items see §1.6662–4(g).)

(2) *Substantial authority standard.* The substantial authority standard is an objective standard involving an analysis of the law and application of the law to relevant facts. The substantial authority standard is less stringent than the more likely than not standard (the standard that is met when there is a greater than 50-percent likelihood of the position being upheld), but more stringent than the reasonable basis standard as defined in §1.6662–3(b)(3). The possibility that a return will not be audited or, if audited, that an item will not be raised on audit, is not relevant in determining whether the substantial authority standard (or the reasonable basis standard) is satisfied.

(3) *Determination of whether substantial authority is present* —(i) *Evaluation of authorities.* There is substantial authority for the tax treatment of an item only if the weight of the authorities supporting the treatement is substantial in relation to the weight of authorities supporting contrary treatment. All authorities relevant to the tax treatment of an item, including the authorities contrary to the treatment, are taken into account in determining whether substantial authority exists. The weight of authorities is determined in light of the pertinent facts and circumstances in the manner prescribed by paragraph (d)(3)(ii) of this section. There may be substantial authority for more than one position with respect to the same item. Because the substantial authority standard is an objective standard, the taxpayer's belief that there is substantial authority for the tax treatment of an item is not relevant in determining whether there is substantial authority for that treatment.

(ii) *Nature of analysis.* The weight accorded an authority depends on its relevance and persuasiveness, and the type of document providing the authority. For example, a case or revenue ruling having some facts in common with the tax treatment at issue is not particularly relevant if the authority is materially distinguishable on its facts, or is otherwise inapplicable to the tax treatment at issue. An authority that merely states a conclusion ordinarily is less persuasive than one that reaches its conclusion by cogently relating the applicable law to pertinent facts. The weight of an authority from which information has been deleted, such as a private letter ruling, is diminished to the extent that the deleted information may have affected the authority's conclusions. The type of document also must be considered. For example, a revenue ruling is accorded greater weight than a private letter ruling addressing the same issue. An older private letter ruling, technical advice memorandum, general counsel memorandum or action on decision generally must be accorded less weight than a more recent one. Any document described in the preceding sentence that is more than 10 years old generally is accorded very little weight. However, the persuasiveness and relevance of a document, viewed in light of subsequent developments, should be taken into account along with the age of the document. There may be substantial authority for the tax treatment of an item despite the absence of certain types of authority. Thus, a taxpayer may have substantial authority for a position that is supported only by a well-reasoned construction of the applicable statutory provision.

(iii) *Types of authority.* Except in cases described in paragraph (d)(3)(iv) of this section concerning written determinations, only the following are authority for purposes of determining whether there is substantial authority for the tax treatment of an item: Applicable provisions of the Internal Revenue Code and other statutory provisions; proposed, temporary and final regulations construing such statues; revenue rulings and revenue procedures; tax treaties and regulations thereunder, and Treasury Department and other official explanations of such treaties; court cases; congressional intent as reflected in committee reports,

joint explanatory statements of managers included in conference committee reports, and floor statements made prior to enactment by one of a bill's managers; General Explanations of tax legislation prepared by the Joint Committee on Taxation (the Blue Book); private letter rulings and technical advice memoranda issued after October 31, 1976; actions on decisions and general counsel memoranda issued after March 12, 1981 (as well as general counsel memoranda published in pre-1955 volumes of the Cumulative Bulletin); Internal Revenue Service information or press releases; and notices, announcements and other administrative pronouncements published by the Service in the Internal Revenue Bulletin. Conclusions reached in treatises, legal periodicals, legal opinions or opinions rendered by tax professionals are not authority. The authorities underlying such expressions of opinion where applicable to the facts of a particular case, however, may give rise to substantial authority for the tax treatment of an item. Notwithstanding the preceding list of authorities, an authority does not continue to be an authority to the extent it is overruled or modified, implicitly or explicitly, by a body with the power to overrule or modify the earlier authority. In the case of court decisions, for example, a district court opinion on an issue is not an authority if overruled or reversed by the United States Court of Appeals for such district. However, a Tax Court opinion is not considered to be overruled or modified by a court of appeals to which a taxpayer does not have a right of appeal, unless the Tax Court adopts the holding of the court of appeals. Similarly, a private letter ruling is not authority if revoked or if inconsistent with a subsequent proposed regulation, revenue ruling or other administrative pronouncement published in the Internal Revenue Bulletin.

(iv) *Special rules*—(A) *Written determinations.* There is substantial authority for the tax treatment of an item by a taxpayer if the treatment is supported by the conclusion of a ruling or a determination letter (as defined in §301.6110–2 (d) and (e)) issued to the taxpayer, by the conclusion of a technical advice memorandum in which the taxpayer is named, or by an affirmative statement in a revenue agent's report with respect to a prior taxable year of the taxpayer (''written determinations''). The preceding sentence does not apply, however, if—

(*1*) There was a misstatement or omission of a material fact or the facts that subsequently develop are materially different from the facts on which the written determination was based, or

(*2*) The written determination was modified or revoked after the date of issuance by—

(*i*) A notice to the taxpayer to whom the written determination was issued,

(*ii*) The enactment of legislation or ratification of a tax treaty,

(*iii*) A decision of the United States Supreme Court,

(*iv*) The issuance of temporary or final regulations, or

(*v*) The issuance of a revenue ruling, revenue procedure, or other statement published in the Internal Revenue Bulletin.

Except in the case of a written determination that is modified or revoked on account of §1.6662–4(d)(3)(iv)(A)(*1*), a written determination that is modified or revoked as described in §1.6662–4(d)(3)(iv)(A)(*2*) ceases to be authority on the date, and to the extent, it is so modified or revoked. See section 6404(f) for rules which require the Secretary to abate a penalty that is attributable to erroneous written advice furnished to a taxpayer by an officer or employee of the Internal Revenue Service.

(B) *Taxpayer's jurisdiction.* The applicability of court cases to the taxpayer by reason of the taxpayer's residence in a particular jurisdiction is not taken into account in determining whether there is substantial authority for the tax treatment of an item. Notwithstanding the preceding sentence, there is substantial authority for the tax treatment of an item if the treatment is supported by controlling precedent of a United States Court of Appeals to which the taxpayer has a right of appeal with respect to the item.

(C) *When substantial authority determined.* There is substantial authority for the tax treatment of an item if there is substantial authority at the time the return containing the item is

filed or there was substantial authority on the last day of the taxable year to which the return relates.

(v) *Substantial authority for tax returns due before January 1, 1990.* There is substantial authority for the tax treatment of an item on a return that is due (without regard to extensions) after December 31, 1982 and before January 1, 1990, if there is substantial authority for such treatment under either the provisions of paragraph (d)(3)(iii) of this section (which set forth an expanded list of authorities) or of § 1.6661–3(b)(2) (which set forth a narrower list of authorities). Under either list of authorities, authorities both for and against the position must be taken into account.

(e) *Disclosure of certain information*—(1) *Effect of adequate disclosure.* Items for which there is adequate disclosure as provided in this paragraph (e) and in paragraph (f) of this section are treated as if such items were shown properly on the return for the taxable year in computing the amount of the tax shown on the return. Thus, for purposes of section 6662(d), the tax attributable to such items is not included in the understatement for that year.

(2) *Circumstances where disclosure will not have an effect.* The rules of paragraph (e)(1) of this section do not apply where the item or position on the return—

(i) Does not have a reasonable basis (as defined in § 1.6662–3(b)(3));

(ii) Is attributable to a tax shelter (as defined in section 6662(d)(2)(C)(iii) and paragraph (g)(2) of this section); or

(iii) Is not properly substantiated, or the taxpayer failed to keep adequate books and records with respect to the item or position.

(3) *Restriction for corporations.* For purposes of paragraph (e)(2)(i) of this section, a corporation will not be treated as having a reasonable basis for its tax treatment of an item attributable to a multi-party financing transaction entered into after August 5, 1997, if the treatment does not clearly reflect the income of the corporation.

(f) *Method of making adequate disclosure*—(1) *Disclosure statement.* Disclosure is adequate with respect to an item (or group of similar items, such as amounts paid or incurred for supplies by a taxpayer engaged in business) or a position on a return if the disclosure is made on a properly completed form attached to the return or to a qualified amended return (as defined in § 1.6664–2(c)(3)) for the taxable year. In the case of an item or position other than one that is contrary to a regulation, disclosure must be made on Form 8275 (Disclosure Statement); in the case of a position contrary to a regulation, disclosure must be made on Form 8275–R (Regulation Disclosure Statement).

(2) *Disclosure on return.* The Commissioner may by annual revenue procedure (or otherwise) prescribe the circumstances under which disclosure of information on a return (or qualified amended return) in accordance with applicable forms and instructions is adequate. If the revenue procedure does not include an item, disclosure is adequate with respect to that item only if made on a properly completed Form 8275 or 8275–R, as appropriate, attached to the return for the year or to a qualified amended return.

(3) *Recurring item.* Disclosure with respect to a recurring item, such as the basis of recovery property, must be made for each taxable year in which the item is taken into account.

(4) *Carrybacks and carryovers.* Disclosure is adequate with respect to an item which is included in any loss, deduction or credit that is carried to another year only if made in connection with the return (or qualified amended return) for the taxable year in which the carryback or carryover arises (the ''loss or credit year''). Disclosure is not also required in connection with the return for the taxable year in which the carryback or carryover is taken into account.

(5) *Pass-through entities.* Disclosure in the case of items attributable to a pass-through entity (pass-through items) is made with respect to the return of the entity, except as provided in this paragraph (f)(5). Thus, disclosure in the case of pass-through items must be made on a Form 8275 or 8275–R, as appropriate, attached to the return (or qualified amended return) of the entity, or on the entity's return in accordance with the revenue procedure described in paragraph (f)(2) of this section, if applicable. A taxpayer (i.e.,

partner, shareholder, beneficiary, or holder of a residual interest in a REMIC) also may make adequate disclosure with respect to a pass-through item, however, if the taxpayer files a properly completed Form 8275 or 8275–R, as appropriate, in duplicate, one copy attached to the taxpayer's return (or qualified amended return) and the other copy filed with the Internal Revenue Service Center with which the return of the entity is required to be filed. Each Form 8275 or 8275–R, as appropriate, filed by the taxpayer should relate to the pass-through items of only one entity. For purposes of this paragraph (f)(5), a pass-through entity is a partnership, S corporation (as defined in section 1361(a)(1)), estate, trust, regulated investment company (as defined in section 851(a)), real estate investment trust (as defined in section 856(a)), or real estate mortgage investment conduit (''REMIC'') (as defined in section 860D(a)).

(g) *Items relating to tax shelters*—(1) *In general*—(i) *Noncorporate taxpayers*. Tax shelter items (as defined in paragraph (g)(3) of this section) of a taxpayer other than a corporation are treated for purposes of this section as if such items were shown properly on the return for a taxable year in computing the amount of tax shown on the return, and thus the tax attributable to such items is not included in the understatement for the year, if—

(A) There is substantial authority (as provided in paragraph (d) of this section) for the tax treatment of that item; and

(B) The taxpayer reasonably believed at the time the return was filed that the tax treatment of that item was more likely than not the proper treatment.

(ii) *Corporate taxpayers*—(A) *In general*. Except as provided in paragraph (g)(1)(ii)(B) of this section, all tax shelter items (as defined in paragraph (g)(3) of this section) of a corporation are taken into account in computing the amount of any understatement.

(B) *Special rule for transactions occurring prior to December 9, 1994*. The tax shelter items of a corporation arising in connection with transactions occurring prior to December 9, 1994 are treated for purposes of this section as if such items were shown properly on the return if the requirements of paragraph (g)(1)(i) are satisfied with respect to such items.

(iii) *Disclosure irrelevant*. Disclosure made with respect to a tax shelter item of either a corporate or noncorporate taxpayer does not affect the amount of an understatement.

(iv) *Cross-reference*. See §1.6664–4(e) for certain rules regarding the availability of the reasonable cause and good faith exception to the substantial understatement penalty with respect to tax shelter items of corporations.

(2) *Tax shelter*—(i) *In general*. For purposes of section 6662(d), the term ''tax shelter'' means—

(A) A partnership or other entity (such as a corporation or trust),

(B) An investment plan or arrangement, or

(C) Any other plan or arrangement,

if the principal purpose of the entity, plan or arrangement, based on objective evidence, is to avoid or evade Federal income tax. The principal purpose of an entity, plan or arrangement is to avoid or evade Federal income tax if that purpose exceeds any other purpose. Typical of tax shelters are transactions structured with little or no motive for the realization of economic gain, and transactions that utilize the mismatching of income and deductions, overvalued assets or assets with values subject to substantial uncertainty, certain nonrecourse financing, financing techniques that do not conform to standard commercial business practices, or the mischaracterization of the substance of the transaction. The existence of economic substance does not of itself establish that a transaction is not a tax shelter if the transaction includes other characteristics that indicate it is a tax shelter.

(ii) *Principal purpose*. The principal purpose of an entity, plan or arrangement is not to avoid or evade Federal income tax if the entity, plan or arrangement has as its purpose the claiming of exclusions from income, accelerated deductions or other tax benefits in a manner consistent with the statute and Congressional purpose. For example, an entity, plan or arrangement does not have as its principal purpose the avoidance or evasion

of Federal income tax solely as a result of the following uses of tax benefits provided by the Internal Revenue Code: the purchasing or holding of an obligation bearing interest that is excluded from gross income under section 103; taking an accelerated depreciation allowance under section 168; taking the percentage depletion allowance under section 613 or section 613A; deducting intangible drilling and development costs as expenses under section 263(c); establishing a qualified retirement plan under sections 401–409; claiming the possession tax credit under section 936; or claiming tax benefits available by reason of an election under 992 to be taxed as a domestic international sales corporation (''DISC''), under section 927(f)(1) to be taxed as a foreign sales corporation (''FSC''), or under section 1362 to be taxed as an S corporation.

(3) *Tax shelter item.* An item of income, gain, loss, deduction or credit is a ''tax shelter item'' if the item is directly or indirectly attributable to the principal purpose of a tax shelter to avoid or evade Federal income tax. Thus, if a partnership is established for the principal purpose of avoiding or evading Federal income tax by acquiring and overstating the basis of property for purposes of claiming accelerated depreciation, the depreciation with respect to the property is a tax shelter item. However, a deduction claimed in connection with a separate transaction carried on by the same partnership is not a tax shelter item if the transaction does not constitute a plan or arrangement the principal purpose of which is to avoid or evade tax.

(4) *Reasonable belief*—(i) *In general.* For purposes of section 6662(d) and paragraph (g)(1)(i)(B) of this section (pertaining to tax shelter items of noncorporate taxpayers), a taxpayer is considered reasonably to believe that the tax treatment of an item is more likely than not the proper tax treatment if (without taking into account the possibility that a return will not be audited, that an issue will not be raised on audit, or that an issue will be settled)—

(A) The taxpayer analyzes the pertinent facts and authorities in the manner described in paragraph (d)(3)(ii) of this section, and in reliance upon that analysis, reasonably concludes in good faith that there is a greater than 50-percent likelihood that the tax treatment of the item will be upheld if challenged by the Internal Revenue Service; or

(B) The taxpayer reasonably relies in good faith on the opinion of a professional tax advisor, if the opinion is based on the tax advisor's analysis of the pertinent facts and authorities in the manner described in paragraph (d)(3)(ii) of this section and unambiguously states that the tax advisor concludes that there is a greater than 50-percent likelihood that the tax treatment of the item will be upheld if challenged by the Internal Revenue Service.

(ii) *Facts and circumstances; reliance on professional tax advisor.* All facts and circumstances must be taken into account in determining whether a taxpayer satisfies the requirements of paragraph (g)(4)(i) of this section. However, in no event will a taxpayer be considered to have reasonably relied in good faith on the opinion of a professional tax advisor for purposes of paragraph (g)(4)(i)(B) of this section unless the requirements of § 1.6664–4(c)(1) are met. The fact that the requirements of § 1.6664–4(c)(1) are satisfied will not necessarily establish that the taxpayer reasonably relied on the opinion in good faith. For example, reliance may not be reasonable or in good faith if the taxpayer knew, or should have known, that the advisor lacked knowledge in the relevant aspects of Federal tax law.

(5) *Pass-through entities.* In the case of tax shelter items attributable to a pass-through entity, the actions described in paragraphs (g)(4)(i)(A) and (B) of this section, if taken by the entity, are deemed to have been taken by the taxpayer and are considered in determining whether the taxpayer reasonably believed that the tax treatment of an item was more likely than not the proper tax treatment.

[T.D. 8381, 56 FR 67499, Dec. 31, 1991; T.D. 8381, 57 FR 6165, Feb. 20, 1992, as amended by T.D. 8617, 60 FR 45665, Sept. 1, 1995; T.D. 8790, 63 FR 66435, Dec. 2, 1998]

§ 1.6662–5 Substantial and gross valuation misstatements under chapter 1.

(a) *In general.* If any portion of an underpayment, as defined in section 6664(a) and § 1.6664–2, of any income tax imposed under chapter 1 of subtitle A of the Code that is required to be shown on a return is attributable to a substantial valuation misstatement under chapter 1 (''substantial valuation misstatement''), there is added to the tax an amount equal to 20 percent of such portion. Section 6662(h) increases the penalty to 40 percent in the case of a gross valuation misstatement under chapter 1 (''gross valuation misstatement''). No penalty under section 6662(b)(3) is imposed, however, on a portion of an underpayment that is attributable to a substantial or gross valuation misstatement unless the aggregate of all portions of the underpayment attributable to substantial or gross valuation misstatements exceeds the applicable dollar limitation ($5,000 or $10,000), as provided in section 6662(e)(2) and paragraphs (b) and (f)(2) of this section. This penalty also does not apply to the extent that the reasonable cause and good faith exception to this penalty set forth in § 1.6664–4 applies. There is no disclosure exception to this penalty.

(b) *Dollar limitation.* No penalty may be imposed under section 6662(b)(3) for a taxable year unless the portion of the underpayment for that year that is attributable to substantial or gross valuation misstatements exceeds $5,000 ($10,000 in the case of a corporation other than an S corporation (as defined in section 1361(a)(1)) or a personal holding company (as defined in section 542)). This limitation is applied separately to each taxable year for which there is a substantial or gross valuation misstatement.

(c) *Special rules in the case of carrybacks and carryovers*—(1) *In general.* The penalty for a substantial or gross valuation misstatement applies to any portion of an underpayment for a year to which a loss, deduction or credit is carried that is attributable to a substantial or gross valuation misstatement for the year in which the carryback or carryover of the loss, deduction or credit arises (the ''loss or credit year''), provided that the applicable dollar limitation set forth in section 6662(e)(2) is satisfied in the carryback or carryover year.

(2) *Transition rule for carrybacks to pre-1990 years.* The penalty under section 6662(b)(3) is imposed on any portion of an underpayment for a carryback year, the return for which is due (without regard to extensions) before January 1, 1990, if—

(i) That portion is attributable to a substantial or gross valuation misstatement for a loss or credit year; and

(ii) The return for the loss or credit year is due (without regard to extensions) after December 31, 1989.

The preceding sentence applies only if the underpayment for the carryback year exceeds the applicable dollar limitation ($5,000, or $10,000 for most corporations). See *Example 3* in paragraph (d) of this section.

(d) *Examples.* The following examples illustrate the provisions of paragraphs (b) and (c) of this section. These examples do not take into account the reasonable cause exception under § 1.6664–4.

Example 1. Corporation Q is a C corporation. In 1990, the first year of its existence, Q had taxable income of $200,000 without considering depreciation of a particular asset. On its calendar year 1990 return, Q overstated its basis in this asset by an amount that caused a substantial valuation misstatement. The overstated basis resulted in depreciation claimed of $350,000, which was $250,000 more than the $100,000 allowable. Thus, on its 1990 return, Q showed a loss of $150,000. In 1991, Q had taxable income of $450,000 before application of the loss carryover, and Q claimed a carryover loss deduction under section 172 of $150,000, resulting in taxable income of $300,000 for 1991. Upon audit of the 1990 return, the basis of the asset was corrected, resulting in an adjustment of $250,000. For 1990, the underpayment resulting from the $100,000 taxable income (−$150,000+$250,000) is attributable to the valuation misstatement. Assuming the underpayment resulting from the $100,000 taxable income exceeds the $10,000 limitation, the penalty will be imposed in 1990. For 1991, the elimination of the loss carryover results in additional taxable income of $150,000. The underpayment for 1991 resulting from that adjustment is also attributable to the substantial valuation misstatement on the 1990

return. Assuming the underpayment resulting from the $150,000 additional taxable income for 1991 exceeds the $10,000 limitation, the substantial valuation misstatement penalty also will be imposed for that year.

Example 2. (i) Corporation T is a C corporation. In 1990, the first year of its existence, T had a loss of $3,000,000 without considering depreciation of its major asset. On its calendar year 1990 return, T overstated its basis in this asset in an amount that caused a substantial valuation misstatement. This overstatement resulted in depreciation claimed of $3,500,000, which was $2,500,000 more than the $1,000,000 allowable. Thus, on its 1990 return, T showed a loss of $6,500,000. In 1991, T had taxable income of $4,500,000 before application of the carryover loss, but claimed a carryover loss deduction under section 172 in the amount of $4,500,000, resulting in taxable income of zero for that year and leaving a $2,000,000 carryover available. Upon audit of the 1990 return, the basis of the asset was corrected, resulting in an adjustment of $2,500,000.

(ii) For 1990, the underpayment is still zero (−$6,500,000+$2,500,000=−$4,000,000). Thus, the penalty does not apply in 1990. The loss for 1990 is reduced to $4,000,000.

(iii) For 1991, there is additional taxable income of $500,000 as a result of the reduction of the carryover loss ($4,500,000 reported income before carryover loss minus corrected carryover loss of $4,000,000=$500,000). The underpayment for 1991 resulting from reduction of the carryover loss is attributable to the valuation misstatement on the 1990 return. Assuming the underpayment resulting from the $500,000 additional taxable income exceeds the $10,000 limitation, the substantial valuation misstatement penalty will be imposed in 1991.

Example 3. Corporation V is a C corporation. In 1990, V had a loss of $100,000 without considering depreciation of a particular asset which it had fully depreciated in earlier years. V had a depreciable basis in the asset of zero, but on its 1990 calendar year return erroneously claimed a basis in the asset of $1,250,000 and depreciation of $250,000. V reported a $350,000 loss for the year 1990, and carried back the loss to the 1987 and 1988 tax years. V had reported taxable income of $300,000 in 1987 and $200,000 in 1988, before application of the carryback. The $350,000 carryback eliminated all taxable income for 1987, and $50,000 of the taxable income for 1988. After disallowance of the $250,000 depreciation deduction for 1990, V still had a loss of $100,000. Because there is no underpayment for 1990, no valuation misstatement penalty is imposed for 1990. However, as a result of the 1990 depreciation adjustment, the carryback to 1987 is reduced from $350,000 to $100,000. After absorption of the $100,000 carryback, V has taxable income of $200,000 for 1987. This adjustment results in an underpayment for 1987 that is attributable to the valuation misstatement on the 1990 return. The valuation misstatement for 1990 is a gross valuation misstatement because the correct adjusted basis of the depreciated asset was zero. (See paragraph (e)(2) of this section.) Therefore, the 40 percent penalty rate applies to the 1987 underpayment attributable to the 1990 misstatement, provided that this underpayment exceeds $10,000. The adjustment also results in the elimination of any loss carryback to 1988 resulting in an increase in taxable income for 1988 of $50,000. Assuming the underpayment resulting from this additional $50,000 of income exceeds $10,000, the gross valuation misstatement penalty is imposed on the underpayment for 1988.

(e) *Definitions*—(1) *Substantial valuation misstatement.* There is a substantial valuation misstatement if the value or adjusted basis of any property claimed on a return of tax imposed under chapter 1 is 200 percent or more of the correct amount.

(2) *Gross valuation misstatement.* There is a gross valuation misstatement if the value or adjusted basis of any property claimed on a return of tax imposed under chapter 1 is 400 percent or more of the correct amount.

(3) *Property.* For purposes of this section, the term ''property'' refers to both tangible and intangible property. Tangible property includes property such as land, buildings, fixtures and inventory. Intangible property includes property such as goodwill, covenants not to compete, leaseholds, patents, contract rights, debts and choses in action.

(f) *Multiple valuation misstatements on a return*—(1) *Determination of whether valuation misstatements are substantial or gross.* The determination of whether there is a substantial or gross valuation misstatement on a return is made on a property-by-property basis. Assume, for example, that property A has a value of 60 but a taxpayer claims a value of 110, and that property B has a value of 40 but the taxpayer claims a value of 100. Because the claimed and correct values are compared on a property-by-property basis, there is a substantial valuation misstatement with respect to property B, but not with respect to property A, even though the claimed values (210) are 200 percent or more of the correct values (100) when compared on an aggregate basis.

(2) *Application of dollar limitation*. For purposes of applying the dollar limitation set forth in section 6662(e)(2), the determination of the portion of an underpayment that is attributable to a substantial or gross valuation misstatement is made by aggregating all portions of the underpayment attributable to substantial or gross valuation misstatements. Assume, for example, that the value claimed for property C on a return is 250 percent of the correct value, and that the value claimed for property D on the return is 400 percent of the correct value. Because the portions of an underpayment that are attributable to a substantial or gross valuation misstatement on a return are aggregated in applying the dollar limitation, the dollar limitation is satisfied if the portion of the underpayment that is attributable to the misstatement of the value of property C, when aggregated with the portion of the underpayment that is attributable to the misstatement of the value of property D, exceeds $5,000 ($10,000 in the case of most corporations).

(g) *Property with a value or adjusted basis of zero*. The value or adjusted basis claimed on a return of any property with a correct value or adjusted basis of zero is considered to be 400 percent or more of the correct amount. There is a gross valuation misstatement with respect to such property, therefore, and the applicable penalty rate is 40 percent.

(h) *Pass-through entities*—(1) *In general*. The determination of whether there is a substantial or gross valuation misstatement in the case of a return of a pass-through entity (as defined in §1.6662–4(f)(5)) is made at the entity level. However, the dollar limitation ($5,000 or $10,000, as the case may be) is applied at the taxpayer level (*i.e.*, with respect to the return of the shareholder, partner, beneficiary, or holder of a residual interest in a REMIC).

(2) *Example*. The rules of paragraph (h)(1) of this section may be illustrated by the following example.

Example. Partnership P has two partners, individuals A and B. P claims a $40,000 basis in a depreciable asset which, in fact, has a basis of $15,000. The determination that there is a substantial valuation misstatement is made solely with reference to P by comparing the $40,000 basis claimed by P with P's correct basis of $15,000. However, the determination of whether the $5,000 threshold for application of the penalty has been reached is made separately for each partner. With respect to partner A, the penalty will apply if the portion of A's underpayment attributable to the passthrough of the depreciation deduction, when aggregated with any other portions of A's underpayment also attributable to substantial or gross valuation misstatements, exceeds $5,000 (assuming there is not reasonable cause for the misstatements (*see* §1.6664–4(c)).

(i) [Reserved]

(j) *Transactions between persons described in section 482 and net section 482 transfer price adjustments*. [Reserved]

(k) *Returns affected*. Except in the case of rules relating to transactions between persons described in section 482 and net sections 482 transfer price adjustments, the provisions of section 6662(b)(3) apply to returns due (without regard to extensions of time to file) after December 31, 1989, notwithstanding that the original substantial or gross valuation misstatement occurred on a return that was due (without regard to extensions) before January 1, 1990. Assume, for example, that a calendar year corporation claimed a deduction on its 1990 return for depreciation of an asset with a basis of X. Also assume that it had reported the same basis for computing depreciation on its returns for the preceding 5 years and that the basis shown on the return each year was 200 percent or more of the correct basis. The corporation may be subject to a penalty for substantial valuation misstatements on its 1989 and 1990 returns, even though the original misstatement occurred prior to the effective date of sections 6662(b)(3) and (e).

[T.D. 8381, 56 FR 67504, Dec. 31, 1991; T.D. 8381, 57 FR 6165, Feb. 20, 1992]

§1.6662–5T Substantial and gross valuation misstatements under chapter 1 (temporary).

(a)–(e)(3) [Reserved]. For further information, see §1.6662–5(a) through (e)(3).

(e)(4) *Tests related to section 482*—(i) *Substantial valuation misstatement*. There is a substantial valuation misstatement if there is a misstatement described in §1.6662–6

(b)(1) or (c)(1) (concerning substantial valuation misstatements pertaining to transactions between related persons).

(ii) *Gross valuation misstatement.* There is a gross valuation misstatement if there is a misstatement described in §1.6662–6 (b)(2) or (c)(2) (concerning gross valuation misstatements pertaining to transactions between related persons).

(iii) *Property.* For purposes of this section, the term *property* refers to both tangible and intangible property. Tangible property includes property such as money, land, buildings, fixtures and inventory. Intangible property includes property such as goodwill, covenants not to compete, leaseholds, patents, contract rights, debts, choses in action, and any other item of intangible property described in §1.482–4(b).

(f)–(h) [Reserved] For further information, see §1.6662–5 (f) through (h).

(i) [Reserved]

(j) *Transactions between persons described in section 482 and net section 482 transfer price adjustments.* For rules relating to the penalty imposed with respect to a substantial or gross valuation misstatement arising from a section 482 allocation, see §1.6662–6.

[T.D. 8656, 61 FR 4879, Feb. 9, 1996; T.D. 8656, 61 FR 14248, Apr. 1, 1996]

§1.6662–6 Transactions between persons described in section 482 and net section 482 transfer price adjustments.

(a) *In general*—(1) *Purpose and scope.* Pursuant to section 6662(e) a penalty is imposed on any underpayment attributable to a substantial valuation misstatement pertaining to either a transaction between persons described in section 482 (the transactional penalty) or a net section 482 transfer price adjustment (the net adjustment penalty). The penalty is equal to 20 percent of the underpayment of tax attributable to that substantial valuation misstatement. Pursuant to section 6662(h) the penalty is increased to 40 percent of the underpayment in the case of a gross valuation misstatement with respect to either penalty. Paragraph (b) of this section provides specific rules related to the transactional penalty. Paragraph (c) of this section provides specific rules related to the net adjustment penalty, and paragraph (d) of this section describes amounts that will be excluded for purposes of calculating the net adjustment penalty. Paragraph (e) of this section sets forth special rules in the case of carrybacks and carryovers. Paragraph (f) of this section provides coordination rules between penalties. Paragraph (g) of this section provides the effective date of this section.

(2) *Reported results.* Whether an underpayment is attributable to a substantial or gross valuation misstatement must be determined from the results of controlled transactions that are reported on an income tax return, regardless of whether the amount reported differs from the transaction price initially reflected in the taxpayer's books and records. The results of controlled transactions that are reported on an amended return will be used only if the amended return is filed before the Internal Revenue Service has contacted the taxpayer regarding the corresponding original return. A written statement furnished by a taxpayer subject to the Coordinated Examination Program or a written statement furnished by the taxpayer when electing Accelerated Issue Resolution or similar procedures will be considered an amended return for purposes of this section if it satisfies either the requirements of a qualified amended return for purposes of §1.6664–2(c)(3) or such requirements as the Commissioner may prescribe by revenue procedure. In the case of a taxpayer that is a member of a consolidated group, the rules of this paragraph (a)(2) apply to the consolidated income tax return of the group.

(3) *Identical terms used in the section 482 regulations.* For purposes of this section, the terms used in this section shall have the same meaning as identical terms used in regulations under section 482.

(b) *The transactional penalty*—(1) *Substantial valuation misstatement.* In the case of any transaction between related persons, there is a substantial valuation misstatement if the price for any property or services (or for the use of property) claimed on any return is 200 percent or more (or 50 percent or

less) of the amount determined under section 482 to be the correct price.

(2) *Gross valuation misstatement.* In the case of any transaction between related persons, there is a gross valuation misstatement if the price for any property or services (or for the use of property) claimed on any return is 400 percent or more (or 25 percent or less) of the amount determined under section 482 to be the correct price.

(3) *Reasonable cause and good faith.* Pursuant to section 6664(c), the transactional penalty will not be imposed on any portion of an underpayment with respect to which the requirements of §1.6664–4 are met. In applying the provisions of §1.6664–4 in a case in which the taxpayer has relied on professional analysis in determining its transfer pricing, whether the professional is an employee of, or related to, the taxpayer is not determinative in evaluating whether the taxpayer reasonably relied in good faith on advice. A taxpayer that meets the requirements of paragraph (d) of this section with respect to an allocation under section 482 will be treated as having established that there was reasonable cause and good faith with respect to that item for purposes of §1.6664–4. If a substantial or gross valuation misstatement under the transactional penalty also constitutes (or is part of) a substantial or gross valuation misstatement under the net adjustment penalty, then the rules of paragraph (d) of this section (and not the rules of §1.6664–4) will be applied to determine whether the adjustment is excluded from calculation of the net section 482 adjustment.

(c) *Net adjustment penalty*—(1) *Net section 482 adjustment.* For purposes of this section, the term *net section 482 adjustment* means the sum of all increases in the taxable income of a taxpayer for a taxable year resulting from allocations under section 482 (determined without regard to any amount carried to such taxable year from another taxable year) less any decreases in taxable income attributable to collateral adjustments as described in §1.482–1(g). For purposes of this section, amounts that meet the requirements of paragraph (d) of this section will be excluded from the calculation of the net section 482 adjustment. Substantial and gross valuation misstatements that are subject to the transactional penalty under paragraph (b) (1) or (2) of this section are included in determining the amount of the net section 482 adjustment. See paragraph (f) of this section for coordination rules between penalties.

(2) *Substantial valuation misstatement.* There is a substantial valuation misstatement if a net section 482 adjustment is greater than the lesser of 5 million dollars or ten percent of gross receipts.

(3) *Gross valuation misstatement.* There is a gross valuation misstatement if a net section 482 adjustment is greater than the lesser of 20 million dollars or twenty percent of gross receipts.

(4) *Setoff allocation rule.* If a taxpayer meets the requirements of paragraph (d) of this section with respect to some, but not all of the allocations made under section 482, then for purposes of determining the net section 482 adjustment, setoffs, as taken into account under §1.482–1(g)(4), must be applied ratably against all such allocations. The following example illustrates the principle of this paragraph (c)(4):

Example. (i) The Internal Revenue Service makes the following section 482 adjustments for the taxable year:

(1) Attributable to an increase in gross income because of an increase in royalty payments	$9,000,000
(2) Attributable to an increase in sales proceeds due to a decrease in the profit margin of a related buyer	6,000,000
(3) Because of a setoff under §1.482–1(g)(4)	(5,000,000)
Total section 482 adjustments	10,000,000

(ii) The taxpayer meets the requirements of paragraph (d) with respect to adjustment number one, but not with respect to adjustment number two. The five million dollar setoff will be allocated ratably against the nine million dollar adjustment ($9,000,000/$15,000,000×$5,000,000=$3,000,000) and the six million dollar adjustment ($6,000,000/$15,000,000×$5,000,000=$2,000,000). Accordingly, in determining the net section 482 adjustment, the nine million dollar adjustment is reduced to six million dollars ($9,000,000–$3,000,000) and the six million dollar adjustment is reduced to four million dollars ($6,000,000–$2,000,000). Therefore, the net section 482 adjustment equals four million dollars.

(5) *Gross receipts*. For purposes of this section, gross receipts must be computed pursuant to the rules contained in §1.448–1T(f)(2)(iv), as adjusted to reflect allocations under section 482.

(6) *Coordination with reasonable cause exception under section 6664(c)*. Pursuant to section 6662(e)(3)(D), a taxpayer will be treated as having reasonable cause under section 6664(c) for any portion of an underpayment attributable to a net section 482 adjustment only if the taxpayer meets the requirements of paragraph (d) of this section with respect to that portion.

(7) *Examples*. The principles of this paragraph (c) are illustrated by the following examples:

Example 1. (i) The Internal Revenue Service makes the following section 482 adjustments for the taxable year:

(1) Attributable to an increase in gross income because of an increase in royalty payments	$2,000,000
(2) Attributable to an increase in sales proceeds due to a decrease in the profit margin of a related buyer	2,500,000
(3) Attributable to a decrease in the cost of goods sold because of a decrease in the cost plus mark-up of a related seller	2,000,000
Total section 482 adjustments	6,500,000

(ii) None of the adjustments are excluded under paragraph (d) of this section. The net section 482 adjustment ($6.5 million) is greater than five million dollars. Therefore, there is a substantial valuation misstatement.

Example 2. (i) The Internal Revenue Service makes the following section 482 adjustments for the taxable year:

(1) Attributable to an increase in gross income because of an increase in royalty payments	$11,000,000
(2) Attributable to an increase in sales proceeds due to a decrease in the profit margin of a related buyer	2,000,000
(3) Because of a setoff under §1.482–1(g)(4)	(9,000,000)
Total section 482 adjustments	4,000,000

(ii) The taxpayer has gross receipts of sixty million dollars after taking into account all section 482 adjustments. None of the adjustments are excluded under paragraph (d) of this section. The net section 482 adjustment ($4 million) is less than the lesser of five million dollars or ten percent of gross receipts ($60 million×10%=$6 million). Therefore, there is no substantial valuation misstatement.

Example 3. (i) The Internal Revenue Service makes the following section 482 adjustments to the income of an affiliated group that files a consolidated return for the taxable year:

(1) Attributable to Member A	$1,500,000
(2) Attributable to Member B	1,000,000
(3) Attributable to Member C	2,000,000
Total section 482 adjustments	4,500,000

(ii) Members A, B, and C have gross receipts of 20 million dollars, 12 million dollars, and 11 million dollars, respectively. Thus, the total gross receipts are 43 million dollars. None of the adjustments are excluded under paragraph (d) of this section. The net section 482 adjustment ($4.5 million) is greater than the lesser of five million dollars or ten percent of gross receipts ($43 million × 10% = $4.3 million). Therefore, there is a substantial valuation misstatement.

Example 4. (i) The Internal Revenue Service makes the following section 482 adjustments to the income of an affiliated group that files a consolidated return for the taxable year:

(1) Attributable to Member A	$1,500,000
(2) Attributable to Member B	3,000,000
(3) Attributable to Member C	2,500,000
Total section 482 adjustments	7,000,000

(ii) Members A, B, and C have gross receipts of 20 million dollars, 35 million dollars, and 40 million dollars, respectively. Thus, the total gross receipts are 95 million dollars. None of the adjustments are excluded under paragraph (d) of this section. The net section 482 adjustment (7 million dollars) is greater than the lesser of five million dollars or ten percent of gross receipts ($95 million × 10% = $9.5 million). Therefore, there is a substantial valuation misstatement.

Example 5. (i) The Internal Revenue Service makes the following section 482 adjustments to the income of an affiliated group that files a consolidated return for the taxable year:

(1) Attributable to Member A	$2,000,000
(2) Attributable to Member B	1,000,000
(3) Attributable to Member C	1,500,000
Total section 482 adjustments	4,500,000

(ii) Members A, B, and C have gross receipts of 10 million dollars, 35 million dollars, and 40 million dollars, respectively. Thus, the total gross receipts are 85 million dollars. None of the adjustments are excluded under paragraph (d) of this section. The net section 482 adjustment ($4.5 million)

is less than the lesser of five million dollars or ten percent of gross receipts ($85 million × 10%=$8.5 million). Therefore, there is no substantial valuation misstatement even though individual member A's adjustment ($2 million) is greater than ten percent of its individual gross receipts ($10 million × 10%=$1 million).

(d) *Amounts excluded from net section 482 adjustments*—(1) *In general.* An amount is excluded from the calculation of a net section 482 adjustment if the requirements of paragraph (d) (2), (3), or (4) of this section are met with respect to that amount.

(2) *Application of a specified section 482 method*—(i) *In general.* An amount is excluded from the calculation of a net section 482 adjustment if the taxpayer establishes that both the specified method and documentation requirements of this paragraph (d)(2) are met with respect to that amount. For purposes of this paragraph (d), a method will be considered a specified method if it is described in the regulations under section 482 and the method applies to transactions of the type under review. A qualified cost sharing arrangement is considered a specified method. See §1.482–7. An unspecified method is not considered a specified method. See §§1.482–3(e) and 1.482–4(d).

(ii) *Specified method requirement.* The specified method requirement is met if the taxpayer selects and applies a specified method in a reasonable manner. The taxpayer's selection and application of a specified method is reasonable only if, given the available data and the applicable pricing methods, the taxpayer reasonably concluded that the method (and its application of that method) provided the most reliable measure of an arm's length result under the principles of the best method rule of §1.482–1(c). A taxpayer can reasonably conclude that a specified method provided the most reliable measure of an arm's length result only if it has made a reasonable effort to evaluate the potential applicability of the other specified methods in a manner consistent with the principles of the best method rule. The extent of this evaluation generally will depend on the nature of the available data, and it may vary from case to case and from method to method. This evaluation may not entail an exhaustive analysis or detailed application of each method. Rather, after a reasonably thorough search for relevant data, the taxpayer should consider which method would provide the most reliable measure of an arm's length result given that data. The nature of the available data may enable the taxpayer to conclude reasonably that a particular specified method provides a more reliable measure of an arm's length result than one or more of the other specified methods, and accordingly no further consideration of such other specified methods is needed. Further, it is not necessary for a taxpayer to conclude that the selected specified method provides a more reliable measure of an arm's length result than any unspecified method. For examples illustrating the selection of a specified method consistent with this paragraph (d)(2)(ii), see §1.482–8. Whether the taxpayer's conclusion was reasonable must be determined from all the facts and circumstances. The factors relevant to this determination include the following:

(A) The experience and knowledge of the taxpayer, including all members of the taxpayer's controlled group.

(B) The extent to which reliable data was available and the data was analyzed in a reasonable manner. A taxpayer must engage in a reasonably thorough search for the data necessary to determine which method should be selected and how it should be applied. In determining the scope of a reasonably thorough search for data, the expense of additional efforts to locate new data may be weighed against the likelihood of finding additional data that would improve the reliability of the results and the amount by which any new data would change the taxpayer's taxable income. Furthermore, a taxpayer must use the most current reliable data that is available before the end of the taxable year in question. Although the taxpayer is not required to search for relevant data after the end of the taxable year, the taxpayer must maintain as a principal document described in paragraph (d)(2)(iii)(B)(*9*) of this section any relevant data it obtains after the end of the taxable year but before the return is filed, if that data would help determine whether the

taxpayer has reported its true taxable income.

(C) The extent to which the taxpayer followed the relevant requirements set forth in regulations under section 482 with respect to the application of the method.

(D) The extent to which the taxpayer reasonably relied on a study or other analysis performed by a professional qualified to conduct such a study or analysis, including an attorney, accountant, or economist. Whether the professional is an employee of, or related to, the taxpayer is not determinative in evaluating the reliability of that study or analysis, as long as the study or analysis is objective, thorough, and well reasoned. Such reliance is reasonable only if the taxpayer disclosed to the professional all relevant information regarding the controlled transactions at issue. A study or analysis that was reasonably relied upon in a prior year may reasonably be relied upon in the current year if the relevant facts and circumstances have not changed or if the study or analysis has been appropriately modified to reflect any change in facts and circumstances.

(E) If the taxpayer attempted to determine an arm's length result by using more than one uncontrolled comparable, whether the taxpayer arbitrarily selected a result that corresponds to an extreme point in the range of results derived from the uncontrolled comparables. Such a result generally would not likely be closest to an arm's length result. If the uncontrolled comparables that the taxpayer uses to determine an arm's length result are described in §1.482–1(e)(2)(iii)(B), one reasonable method of selecting a point in the range would be that provided in §1.482–1(e)(3).

(F) The extent to which the taxpayer relied on a transfer pricing methodology developed and applied pursuant to an Advance Pricing Agreement for a prior taxable year, or specifically approved by the Internal Revenue Service pursuant to a transfer pricing audit of the transactions at issue for a prior taxable year, provided that the taxpayer applied the approved method reasonably and consistently with its prior application, and the facts and circumstances surrounding the use of the method have not materially changed since the time of the IRS's action, or if the facts and circumstances have changed in a way that materially affects the reliability of the results, the taxpayer makes appropriate adjustments to reflect such changes.

(G) The size of a net transfer pricing adjustment in relation to the size of the controlled transaction out of which the adjustment arose.

(iii) *Documentation requirement*—(A) *In general.* The documentation requirement of this paragraph (d)(2)(iii) is met if the taxpayer maintains sufficient documentation to establish that the taxpayer reasonably concluded that, given the available data and the applicable pricing methods, the method (and its application of that method) provided the most reliable measure of an arm's length result under the principles of the best method rule in §1.482–1(c), and provides that documentation to the Internal Revenue Service within 30 days of a request for it in connection with an examination of the taxable year to which the documentation relates. With the exception of the documentation described in paragraphs (d)(2)(iii)(B) (*9*) and (*10*) of this section, that documentation must be in existence when the return is filed. The district director may, in his discretion, excuse a minor or inadvertent failure to provide required documents, but only if the taxpayer has made a good faith effort to comply, and the taxpayer promptly remedies the failure when it becomes known. The required documentation is divided into two categories, principal documents and background documents as described in paragraphs (d)(2)(iii) (B) and (C) of this section.

(B) *Principal documents.* The principal documents should accurately and completely describe the basic transfer pricing analysis conducted by the taxpayer. The documentation must include the following—

(*1*) An overview of the taxpayer's business, including an analysis of the economic and legal factors that affect the pricing of its property or services;

(*2*) A description of the taxpayer's organizational structure (including an organization chart) covering all related

parties engaged in transactions potentially relevant under section 482, including foreign affiliates whose transactions directly or indirectly affect the pricing of property or services in the United States;

(*3*) Any documentation explicitly required by the regulations under section 482;

(*4*) A description of the method selected and an explanation of why that method was selected;

(*5*) A description of the alternative methods that were considered and an explanation of why they were not selected;

(*6*) A description of the controlled transactions (including the terms of sale) and any internal data used to analyze those transactions. For example, if a profit split method is applied, the documentation must include a schedule providing the total income, costs, and assets (with adjustments for different accounting practices and currencies) for each controlled taxpayer participating in the relevant business activity and detailing the allocations of such items to that activity;

(*7*) A description of the comparables that were used, how comparability was evaluated, and what (if any) adjustments were made;

(*8*) An explanation of the economic analysis and projections relied upon in developing the method. For example, if a profit split method is applied, the taxpayer must provide an explanation of the analysis undertaken to determine how the profits would be split;

(*9*) A description or summary of any relevant data that the taxpayer obtains after the end of the tax year and before filing a tax return, which would help determine if a taxpayer selected and applied a specified method in a reasonable manner; and

(*10*) A general index of the principal and background documents and a description of the recordkeeping system used for cataloging and accessing those documents.

(C) *Background documents*. The assumptions, conclusions, and positions contained in principal documents ordinarily will be based on, and supported by, additional background documents. Documents that support the principal documentation may include the documents listed in §1.6038A–3(c) that are not otherwise described in paragraph (d)(2)(iii)(B) of this section. Every document listed in those regulations may not be relevant to pricing determinations under the taxpayer's specific facts and circumstances and, therefore, each of those documents need not be maintained in all circumstances. Moreover, other documents not listed in those regulations may be necessary to establish that the taxpayer's method was selected and applied in the way that provided the most reliable measure of an arm's length result under the principles of the best method rule in §1.482–1(c). Background documents need not be provided to the Internal Revenue Service in response to a request for principal documents. If the Internal Revenue Service subsequently requests background documents, a taxpayer must provide that documentation to the Internal Revenue Service within 30 days of the request. However, the district director may, in his discretion, extend the period for producing the background documentation.

(3) *Application of an unspecified method*—(i) *In general*. An adjustment is excluded from the calculation of a net section 482 adjustment if the taxpayer establishes that both the unspecified method and documentation requirements of this paragraph (d)(3) are met with respect to that amount.

(ii) *Unspecified method requirement*—(A) *In general*. If a method other than a specified method was applied, the unspecified method requirement is met if the requirements of paragraph (d)(3)(ii)(B) or (C) of this section, as appropriate, are met.

(B) *Specified method potentially applicable*. If the transaction is of a type for which methods are specified in the regulations under section 482, then a taxpayer will be considered to have met the unspecified method requirement if the taxpayer reasonably concludes, given the available data, that none of the specified methods was likely to provide a reliable measure of an arm's length result, and that it selected and applied an unspecified method in a way that would likely provide a reliable measure of an arm's length result. A taxpayer can reasonably conclude that

no specified method was likely to provide a reliable measure of an arm's length result only if it has made a reasonable effort to evaluate the potential applicability of the specified methods in a manner consistent with the principles of the best method rule. However, it is not necessary for a taxpayer to conclude that the selected method provides a more reliable measure of an arm's length result than any other unspecified method. Whether the taxpayer's conclusion was reasonable must be determined from all the facts and circumstances. The factors relevant to this conclusion include those set forth in paragraph (d)(2)(ii) of this section.

(C) *No specified method applicable.* If the transaction is of a type for which no methods are specified in the regulations under section 482, then a taxpayer will be considered to have met the unspecified method requirement if it selected and applied an unspecified method in a reasonable manner. For purposes of this paragraph (d)(3)(ii)(C), a taxpayer's selection and application is reasonable if the taxpayer reasonably concludes that the method (and its application of that method) provided the most reliable measure of an arm's length result under the principles of the best method rule in § 1.482–1(c). However, it is not necessary for a taxpayer to conclude that the selected method provides a more reliable measure of an arm's length result than any other unspecified method. Whether the taxpayer's conclusion was reasonable must be determined from all the facts and circumstances. The factors relevant to this conclusion include those set forth in paragraph (d)(2)(ii) of this section.

(iii) *Documentation requirement*—(A) *In general.* The documentation requirement of this paragraph (d)(3) is met if the taxpayer maintains sufficient documentation to establish that the unspecified method requirement of paragraph (d)(3)(ii) of this section is met and provides that documentation to the Internal Revenue Service within 30 days of a request for it. That documentation must be in existence when the return is filed. The district director may, in his discretion, excuse a minor or inadvertent failure to provide required documents, but only if the taxpayer has made a good faith effort to comply, and the taxpayer promptly remedies the failure when it becomes known.

(B) *Principal and background documents.* See paragraphs (d)(2)(iii) (B) and (C) of this section for rules regarding these two categories of required documentation.

(4) *Certain foreign to foreign transactions.* For purposes of calculating a net section 482 adjustment, any increase in taxable income resulting from an allocation under section 482 that is attributable to any controlled transaction solely between foreign corporations will be excluded unless the treatment of that transaction affects the determination of either corporation's income from sources within the United States or taxable income effectively connected with the conduct of a trade or business within the United States.

(5) *Special rule.* If the regular tax (as defined in section 55(c)) imposed on the taxpayer is determined by reference to an amount other than taxable income, that amount shall be treated as the taxable income of the taxpayer for purposes of section 6662(e)(3). Accordingly, for taxpayers whose regular tax is determined by reference to an amount other than taxable income, the increase in that amount resulting from section 482 allocations is the taxpayer's net section 482 adjustment.

(6) *Examples.* The principles of this paragraph (d) are illustrated by the following examples:

Example 1. (i) The Internal Revenue Service makes the following section 482 adjustments for the taxable year:

(1) Attributable to an increase in gross income because of an increase in royalty payments	$9,000,000
(2) Not a 200 percent or 400 percent adjustment	2,000,000
(3) Attributable to a decrease in the cost of goods sold because of a decrease in the cost plus mark-up of a related seller	9,000,000
Total section 482 adjustments	20,000,000

(ii) The taxpayer has gross receipts of 75 million dollars after all section 482 adjustments. The taxpayer establishes that for adjustments number one and three, it applied a

transfer pricing method specified in section 482, the selection and application of the method was reasonable, it documented the pricing analysis, and turned that documentation over to the IRS within 30 days of a request. Accordingly, eighteen million dollars is excluded from the calculation of the net section 482 adjustment. Because the net section 482 adjustment is two million dollars, there is no substantial valuation misstatement.

Example 2. (i) The Internal Revenue Service makes the following section 482 adjustments for the taxable year:

(1) Attributable to an increase in gross income because of an increase in royalty payments	$9,000,000
(2) Attributable to an adjustment that is 200 percent or more of the correct section 482 price	2,000,000
(3) Attributable to a decrease in the cost of goods sold because of a decrease in the cost plus mark-up of a related seller	9,000,000
Total section 482 adjustments	20,000,000

(ii) The taxpayer has gross receipts of 75 million dollars after all section 482 adjustments. The taxpayer establishes that for adjustments number one and three, it applied a transfer pricing method specified in section 482, the selection and application of the method was reasonable, it documented that analysis, and turned the documentation over to the IRS within 30 days. Accordingly, eighteen million dollars is excluded from the calculation of the section 482 transfer pricing adjustments for purposes of applying the five million dollar or 10% of gross receipts test. Because the net section 482 adjustment is only two million dollars, the taxpayer is not subject to the net adjustment penalty. However, the taxpayer may be subject to the transactional penalty on the underpayment of tax attributable to the two million dollar adjustment.

Example 3. CFC1 and CFC2 are controlled foreign corporations within the meaning of section 957. Applying section 482, the IRS disallows a deduction for 25 million dollars of the interest that CFC1 paid to CFC2, which results in CFC1's U.S. shareholder having a subpart F inclusion in excess of five million dollars. No other adjustments under section 482 are made with respect to the controlled taxpayers. However, the increase has no effect upon the determination of CFC1's or CFC2's income from sources within the United States or taxable income effectively connected with the conduct of a trade or business within the United States. Accordingly, there is no substantial valuation misstatement.

(e) *Special rules in the case of carrybacks and carryovers.* If there is a substantial or gross valuation misstatement for a taxable year that gives rise to a loss, deduction or credit that is carried to another taxable year, the transactional penalty and the net adjustment penalty will be imposed on any resulting underpayment of tax in that other taxable year. In determining whether there is a substantial or gross valuation misstatement for a taxable year, no amount carried from another taxable year shall be included. The following example illustrates the principle of this paragraph (e):

Example. The Internal Revenue Service makes a section 482 adjustment of six million dollars in taxable year 1, no portion of which is excluded under paragraph (d) of this section. The taxpayer's income tax return for year 1 reported a loss of three million dollars, which was carried to taxpayer's year 2 income tax return and used to reduce income taxes otherwise due with respect to year 2. A determination is made that the six million dollar allocation constitutes a substantial valuation misstatement, and a penalty is imposed on the underpayment of tax in year 1 attributable to the substantial valuation misstatement and on the underpayment of tax in year 2 attributable to the disallowance of the net operating loss in year 2. For purposes of determining whether there is a substantial or gross valuation misstatement for year 2, the three million dollar reduction of the net operating loss will not be added to any section 482 adjustments made with respect to year 2.

(f) *Rules for coordinating between the transactional penalty and the net adjustment penalty*—(1) *Coordination of a net section 482 adjustment subject to the net adjustment penalty and a gross valuation misstatement subject to the transactional penalty.* In determining whether a net section 482 adjustment exceeds five million dollars or 10 percent of gross receipts, an adjustment attributable to a substantial or gross valuation misstatement that is subject to the transactional penalty will be taken into account. If the net section 482 adjustment exceeds five million dollars or ten percent of gross receipts, any portion of such amount that is attributable to a gross valuation misstatement will be subject to the transactional penalty at the forty percent rate, but will not also be subject to net adjustment penalty at a twenty

percent rate. The remaining amount is subject to the net adjustment penalty at the twenty percent rate, even if such amount is less than the lesser of five million dollars or ten percent of gross receipts.

(2) *Coordination of net section 482 adjustment subject to the net adjustment penalty and substantial valuation misstatements subject to the transactional penalty*. If the net section 482 adjustment exceeds twenty million dollars or 20 percent of gross receipts, the entire amount of the adjustment is subject to the net adjustment penalty at a forty percent rate. No portion of the adjustment is subject to the transactional penalty at a twenty percent rate.

(3) *Examples*. The following examples illustrate the principles of this paragraph (f):

Example 1. (i) Applying section 482, the Internal Revenue Service makes the following adjustments for the taxable year:

(1) Attributable to an adjustment that is 400 percent or more of the correct section 482 arm's length result	$2,000,000
(2) Not a 200 or 400 percent adjustment	2,500,000
Total	4,500,000

(ii) The taxpayer has gross receipts of 75 million dollars after all section 482 adjustments. None of the adjustments is excluded under paragraph (d) (Amounts excluded from net section 482 adjustments) of this section, in determining the five million dollar or 10% of gross receipts test under section 6662(e)(1)(B)(ii). The net section 482 adjustment (4.5 million dollars) is less than the lesser of five million dollars or ten percent of gross receipts ($75 million × 10% = $7.5 million). Thus, there is no substantial valuation misstatement. However, the two million dollar adjustment is attributable to a gross valuation misstatement. Accordingly, the taxpayer may be subject to a penalty, under section 6662(h), equal to 40 percent of the underpayment of tax attributable to the gross valuation misstatement of two million dollars. The 2.5 million dollar adjustment is not subject to a penalty under section 6662(b)(3).

Example 2. The facts are the same as in *Example 1*, except the taxpayer has gross receipts of 40 million dollars. The net section 482 adjustment ($4.5 million) is greater than the lesser of five million dollars or ten percent of gross receipts ($40 million × 10% = $4 million). Thus, the five million dollar or 10% of gross receipts test has been met. The two million dollar adjustment is attributable to a gross valuation misstatement. Accordingly, the taxpayer is subject to a penalty, under section 6662(h), equal to 40 percent of the underpayment of tax attributable to the gross valuation misstatement of two million dollars. The 2.5 million dollar adjustment is subject to a penalty under sections 6662(a) and 6662(b)(3), equal to 20 percent of the underpayment of tax attributable to the substantial valuation misstatement.

Example 3. (i) Applying section 482, the Internal Revenue Service makes the following transfer pricing adjustments for the taxable year:

(1) Attributable to an adjustment that is 400 percent or more of the correct section 482 arm's length result	$6,000,000
(2) Not a 200 or 400 percent adjustment	15,000,000
Total	21,000,000

(ii) None of the adjustments are excluded under paragraph (d) (Amounts excluded from net section 482 adjustments) in determining the twenty million dollar or 20% of gross receipts test under section 6662(h). The net section 482 adjustment (21 million dollars) is greater than twenty million dollars and thus constitutes a gross valuation misstatement. Accordingly, the total adjustment is subject to the net adjustment penalty equal to 40 percent of the underpayment of tax attributable to the 21 million dollar gross valuation misstatement. The six million dollar adjustment will not be separately included for purposes of any additional penalty under section 6662.

(g) *Effective date*. This section is effective February 9, 1996. However, taxpayers may elect to apply this section to all open taxable years beginning after December 31, 1993.

[T.D. 8656, 61 FR 4880, Feb. 9, 1996; T.D. 8656, 61 FR 14248, Apr. 1, 1996; 62 FR 46877, Sept. 5, 1997]

§ 1.6662–7 Omnibus Budget Reconciliation Act of 1993 changes to the accuracy-related penalty.

(a) *Scope*. The Omnibus Budget Reconciliation Act of 1993 made certain changes to the accuracy-related penalty in section 6662. This section provides rules reflecting those changes.

(b) *No disclosure exception for negligence penalty*. The penalty for negligence in section 6662(b)(1) may not be avoided by disclosure of a return position.

(c) *Disclosure standard for other penalties is reasonable basis*. The penalties for disregarding rules or regulations in

section 6662(b)(1) and for a substantial understatement of income tax in section 6662(b)(2) may be avoided by adequate disclosure of a return position only if the position has at least a reasonable basis. See §1.6662–3(c) and §§1.6662–4(e) and (f) for other applicable disclosure rules.

(d) *Reasonable basis*. For purposes of §§1.6662–3(c) and 1.6662–4(e) and (f) (relating to methods of making adequate disclosure), the provisions of §1.6662–3(b)(3) apply in determining whether a return position has a reasonable basis.

[T.D. 8617, 60 FR 45665, Sept. 1, 1995, as amended by T.D. 8790, 63 FR 66435, Dec. 2, 1998]

§1.6664–0 Table of contents.

This section lists the captions in §§1.6664–1 through 1.6664–4T.

§1.6664–1 Accuracy-related and fraud penalties; definitions and special rules.

(a) In general.
(b) Effective date.
(1) In general.
(2) Reasonable cause and good faith exception to section 6662 penalties.

§1.6664–2 Underpayment.

(a) Underpayment defined.
(b) Amount of income tax imposed.
(c) Amount shown as the tax by the taxpayer on his return.
(1) Defined.
(2) Effect of qualified amended return.
(3) Qualified amended return defined.
(4) Special rule for qualified amended returns.
(d) Amounts not so shown previously assessed (or collected without assessment).
(e) Rebates.
(f) Underpayments for certain carryback years not reduced by amount of carrybacks.
(g) Examples.

§1.6664–3 Ordering rules for determining the total amount of penalties imposed.

(a) In general.
(b) Order in which adjustments are taken into account.
(c) Manner in which unclaimed prepayment credits are allocated.
(d) Examples.

§1.6664–4 Reasonable cause and good faith exception to section 6662 penalties.

(a) In general.
(b) Facts and circumstances taken into account.
(1) In general.
(2) Examples.
(c) Reliance on opinion or advice.
(1) Fact and circumstances; minimum requirements.
(i) All facts and circumstances considered.
(ii) No unreasonable assumptions.
(2) Advice defined.
(3) Cross-reference.
(d) Pass-through items.
(e) Special rules for substantial understatement penalty attributable to tax shelter items of corporations.
(1) In general; facts and circumstances.
(2) Reasonable cause based on legal justification.
(i) Minimum requirements.
(A) Authority requirement.
(B) Belief requirement.
(ii) Legal justification defined.
(3) Minimum requirements not dispositive.
(4) Other factors.
(f) Transactions between persons described in section 482 and net section 482 transfer price adjustments. [Reserved]
(g) Valuation misstatements of charitable deduction property.
(1) In general.
(2) Definitions.
(i) Charitable deduction property.
(ii) Qualified appraisal.
(iii) Qualified appraiser.
(3) Special rules.

§1.6664–4T Reasonable cause and good faith exception to section 6662 penalties

(a)—(c) [Reserved]
(d) Transactions between persons described in section 482 and net section 482 transfer price adjustments.

[T.D. 8381, 56 FR 67505, Dec. 31, 1991, as amended by T.D. 8519, 59 FR 4799, Feb. 2, 1994; T.D. 8617, 60 FR 45666, Sept. 1, 1995; T.D. 8656, 61 FR 4885, Feb. 9, 1996; T.D. 8790, 63 FR 66435, Dec. 2, 1998]

§1.6664–1 Accuracy-related and fraud penalties; definitions and special rules.

(a) *In general*. Section 6664(a) defines the term ''underpayment'' for purposes of the accuracy-related penalty under section 6662 and the fraud penalty under section 6663. The definition of ''underpayment'' of income taxes imposed under subtitle A is set forth in §1.6664–2. Ordering rules for computing the total amount of accuracy-related and fraud penalties imposed with respect to a return are set forth in §1.6664–3. Section 6664(c) provides a reasonable cause and good faith exception to the accuracy-related penalty. Rules relating to the reasonable cause and good faith exception are set forth in §1.6664–4.

(b) *Effective date*—(1) *In general*. Sections 1.6664–1 through 1.6664–3 apply to returns the due date of which (determined without regard to extensions of time for filing) is after December 31, 1989.

(2) *Reasonable cause and good faith exception to section 6662 penalties*. Section 1.6664–4 applies to returns the due date of which (determined without regard to extensions of time for filing) is after September 1, 1995. Except as provided in the last sentence of this paragraph (b)(2), § 1.6664–4 (as contained in 26 CFR part 1 revised April 1, 1995) applies to returns the due date of which (determined without regard to extensions of time for filing) is on or before September 1, 1995 and after December 31, 1989. For transactions occurring after December 8, 1994, § 1.6664–4 (as contained in 26 CFR part 1 revised April 1, 1995) is applied taking into account the changes made to section 6662(d)(2)(C) (relating to the substantial understatement penalty for tax shelter items of corporations) by section 744 of Title VII of the Uruguay Round Agreements Act, Pub. L. 103–465 (108 Stat. 4809).

[T.D. 8381, 56 FR 67506, Dec. 31, 1991, as amended by T.D. 8617, 60 FR 45666, Sept. 1, 1995]

§ 1.6664–2 Underpayment.

(a) *Underpayment defined*. In the case of income taxes imposed under subtitle A, an underpayment for purposes of section 6662, relating to the accuracy-related penalty, and section 6663, relating to the fraud penalty, means the amount by which any income tax imposed under this subtitle (as defined in paragraph (b) of the section) exceeds the excess of—

(1) The sum of—

(i) The amount shown as the tax by the taxpayer on his return (as defined in paragraph (c) of this section), plus

(ii) Amounts not so shown previously assessed (or collected without assessment) (as defined in paragraph (d) of this section), over

(2) The amount of rebates made (as defined in paragraph (e) of this section).

The definition of underpayment also may be expressed as—

$$Underpayment = W - (X + Y - Z),$$

where W=the amount of income tax imposed; X=the amount shown as the tax by the taxpayer on his return; Y=amounts not so shown previously assessed (or collected without assessment); and Z=the amount of rebates made.

(b) *Amount of income tax imposed*. For purposes of paragraph (a) of this section, the ''amount of income tax imposed'' is the amount of tax imposed on the taxpayer under subtitle A for the taxable year, determined without regard to—

(1) The credits for tax withheld under sections 31 (relating to tax withheld on wages) and 33 (relating to tax withheld at source on nonresident aliens and foreign corporations);

(2) Payments of tax or estimated tax by the taxpayer;

(3) Any credit resulting from the collection of amounts assessed under section 6851 as the result of a termination assessment, or section 6861 as the result of a jeopardy assessment; and

(4) Any tax that the taxpayer is not required to assess on the return (such as the tax imposed by section 531 on the accumulated taxable income of a corporation).

(c) *Amount shown as the tax by the taxpayer on his return*—(1) *Defined*. For purposes of paragraph (a) of this section, the ''amount shown as the tax by the taxpayer on his return'' is the tax liability shown by the taxpayer on his return, determined without regard to the items listed in § 1.6664–2(b) (1), (2), and (3), except that it is reduced by the excess of—

(i) The amounts shown by the taxpayer on his return as credits for tax withheld under section 31 (relating to tax withheld on wages) and section 33 (relating to tax withheld at source on nonresident aliens and foreign corporations), as payments of estimated tax, or as any other payments made by the taxpayer with respect to a taxable year before filing the return for such taxable year, over

(ii) The amounts actually withheld, actually paid as estimated tax, or actually paid with respect to a taxable year before the return is filed for such taxable year.

(2) *Effect of qualified amended return.* The ''amount shown as the tax by the taxpayer on his return'' includes an amount shown as additional tax on a qualified amended return (as defined in paragraph (c)(3) of this section), except that such amount is not included if it relates to a fraudulent position on the original return.

(3) *Qualified amended return defined.* A qualified amended return is an amended return, or a timely request for an administrative adjustment under section 6227, filed after the due date of the return for the taxable year (determined with regard to extensions of time to file) and before the earliest of—

(i) The time the taxpayer is first contacted by the Internal Revenue Service concerning an examination of the return;

(ii) The time any person described in section 6700(a) (relating to the penalty for promoting abusive tax shelters) is first contacted by the Internal Revenue Service concerning an examination of an activity described in section 6700(a) with respect to which the taxpayer claimed any tax benefit on the return directly or indirectly through the entity, plan or arrangement described in section 6700(a)(1)(A); or

(iii) In the case of a pass-through item (as defined in §1.6662–4(f)(5)), the time the pass-through entity (as defined in §1.6662–4(f)(5)) is first contacted by the Internal Revenue Service in connection with an examination of the return to which the pass-through item relates.

A qualified amended return includes an amended return that is filed solely to disclose information pursuant to §1.6662–3(c) or §1.6662–4 (e) and (f) and that does not report any additional tax liability.

(4) *Special rule for qualified amended returns.* The Commissioner may by revenue procedure prescribe the manner in which the rules of paragraph (c) of this section regarding qualified amended returns apply to particular classes of taxpayers.

(d) *Amounts not so shown previously assessed (or collected without assessment).* For purposes of paragraph (a) of this section, ''amounts not so shown previously assessed'' means only amounts assessed before the return is filed that were not shown on the return, such as termination assessments under section 6851 and jeopardy assessments under section 6861 made prior to the filing of the return for the taxable year. For purposes of paragraph (a) of this section, the amount ''collected without assessment'' is the amount by which the total of the credits allowable under section 31 (relating to tax withheld on wages) and section 33 (relating to tax withheld at source on nonresident aliens and foreign corporations), estimated tax payments, and other payments in satisfaction of tax liability made before the return is filed, exceed the tax shown on the return (provided such excess has not been refunded or allowed as a credit to the taxpayer).

(e) *Rebates.* The term ''rebate'' means so much of an abatement credit, refund or other repayment, as was made on the ground that the tax imposed was less than the excess of—

(1) The sum of—

(i) The amount shown as the tax by the taxpayer on his return, plus

(ii) Amounts not so shown previously assessed (or collected without assessment), over

(2) Rebates previously made.

(f) *Underpayments for certain carryback years not reduced by amount of carrybacks.* The amount of an underpayment for a taxable year that is attributable to conduct proscribed by sections 6662 or 6663 is not reduced on account of a carryback of a loss, deduction or credit to that year. Such conduct includes negligence or disregard of rules or regulations; a substantial understatement of income tax; and a substantial (or gross) valuation misstatement under chapter 1, provided that the applicable dollar limitation is satisfied for the carryback year.

(g) *Examples.* The following examples illustrate this section:

Example 1. Taxpayer's 1990 return showed a tax liability of $18,000. Taxpayer had no amounts previously assessed (or collected without assessment) and received no rebates of tax. Taxpayer claimed a credit in the amount of $23,000 for income tax withheld under section 3402, which resulted in a refund received of $5,000. It is later determined that the taxpayer should have reported additional income and that the correct tax for the taxable year is $25,500. There is an underpayment of $7,500, determined as follows:

Tax imposed under subtitle A	.....	$25,500
Tax shown on return	$18,000	.....
Tax previously assessed (or collected without assessment)	None	.....
Amount of rebates made	None	.....
Balance	.....	$18,000
Underpayment	.....	$7,500

Example 2. The facts are the same as in *Example 1* except that the taxpayer failed to claim on the return a credit of $1,500 for income tax withheld. This $1,500 constitutes an amount collected without assessment as defined in paragraph (d) of this section. The underpayment is $6,000, determined as follows:

Tax imposed under subtitle A	.....	$25,500
Tax shown on return	$18,000	.....
Tax previously assessed (or collected without assessment)	1,500	.....
Amount of rebates made	None	.....
Balance	.....	$19,500
Underpayment	.....	$6,000

Example 3. On Form 1040 filed for tax year 1990, taxpayer reported a tax liability of $10,000, estimated tax payments of $15,000, and received a refund of $5,000. Estimated tax payments actually made with respect to tax year 1990 were only $7,000. For purposes of determining the amount of underpayment subject to a penalty under section 6662 or section 6663, the tax shown on the return is $2,000 (reported tax liability of $10,000 reduced by the overstated estimated tax of $8,000 ($15,000–$7,000)). The underpayment is $8,000, determined as follows:

Tax imposed under subtitle A	.....	$10,000
Tax shown on return	$2,000	.....
Tax previously assessed (or collected without assessment)	None	.....
Amount of rebates made	None	.....
Balance	.....	$2,000
Underpayment	.....	$8,000

[T.D. 8381, 56 FR 67506, Dec. 31, 1991; T.D. 8381, 57 FR 6165, Feb. 20, 1992]

§ 1.6664–3 Ordering rules for determining the total amount of penalties imposed.

(a) *In general*. This section provides rules for determining the order in which adjustments to a return are taken into account for the purpose of computing the total amount of penalties imposed under sections 6662 and 6663, where—

(1) There is at least one adjustment with respect to which no penalty has been imposed and at least one with respect to which a penalty has been imposed, or

(2) There are at least two adjustments with respect to which penalties have been imposed and they have been imposed at different rates.

This section also provides rules for allocating unclaimed prepayment credits to adjustments to a return.

(b) *Order in which adjustments are taken into account*. In computing the portions of an underpayment subject to penalties imposed under sections 6662 and 6663, adjustments to a return are considered made in the following order:

(1) Those with respect to which no penalties have been imposed.

(2) Those with respect to which a penalty has been imposed at a 20 percent rate (*i.e.*, a penalty for negligence or disregard of rules or regulations, substantial understatement of income tax, or substantial valuation misstatement, under sections 6662(b)(1) through 6662(b)(3), respectively).

(3) Those with respect to which a penalty has been imposed at a 40 percent rate (*i.e.*, a penalty for a gross valuation misstatement under sections 6662 (b)(3) and (h)).

(4) Those with respect to which a penalty has been imposed at a 75 percent rate (*i.e.*, a penalty for fraud under section 6663).

(c) *Manner in which unclaimed prepayment credits are allocated*. Any income tax withholding or other payment made before a return was filed, that was neither claimed on the return nor previously allowed as a credit against the tax liability for the taxable year (an ''unclaimed prepayment credit''), is allocated as follows—

(1) If an unclaimed prepayment credit is allocable to a particular adjustment, such credit is applied in full in determining the amount of the underpayment resulting from such adjustment.

(2) If an unclaimed prepayment credit is not allocable to a particular adjustment, such credit is applied in accordance with the ordering rules set forth in paragraph (b) of this section.

(d) *Examples*. The following examples illustrate the rules of this § 1.6664–3. These examples do not take into account the reasonable cause exception to the accuracy-related penalty under § 1.6664–4.

Example 1. A and B, husband and wife, filed a joint federal income tax return for calendar year 1989, reporting taxable income of $15,800 and a tax liability of $2,374. A and B had no amounts previously assessed (or collected without assessment) and no rebates had been made. Subsequently, the return was examined and the following adjustments and penalties were agreed to:

Adjustment #1 (No penalty imposed)		$1,000
Adjustment #2 (Substantial understatement penalty imposed)		40,000
Adjustment #3 (Civil fraud penalty imposed)		45,000
Total adjustments		$86,000
Taxable income shown on return		15,800
Taxable income as corrected		$101,800
Computation of underpayment:		
Tax imposed by subtitle A		$25,828
Tax shown on return	$2,374	
Previous assessments	None	
Rebates	None	
Balance		$2,374
Underpayment		$23,454

Computation of the portions of the underpayment on which penalties under section 6662(b)(2) and section 6663 are imposed:

Step 1 Determine the portion, if any, of the underpayment on which no accuracy-related or fraud penalty is imposed:

Taxable income shown on return	$15,800
Adjustment #1	1,000
''Adjusted'' taxable income	$16,800
Tax on ''adjusted'' taxable income	$2,524
Tax shown on return	2,374
Portion of underpayment on which no penalty is imposed	$150

Step 2 Determine the portion, if any, of the underpayment on which a penalty of 20 percent is imposed:

''Adjusted'' taxable income from step 1	$16,800
Adjustment #2	40,000
''Adjusted'' taxable income	56,800
Tax on ''adjusted'' taxable income	$11,880
Tax on ''adjusted'' taxable income from step 1	$2,524
Portion of underpayment on which 20 percent penalty is imposed	$9,356

Step 3 Determine the portion, if any, of the underpayment on which a penalty of 75 percent is imposed:

Total underpayment		$23,454
Less the sum of the portions of such underpayment determined in:		
Step 1	$150	
Step 2	9,356	
Total		$9,506
Portion of underpayment on which 75 percent penalty is imposed		$13,948

Example 2. The facts are the same as in *Example 1* except that the taxpayers failed to claim on their return a credit of $1,500 for income tax withheld on unreported additional income that resulted in Adjustment #2. Because the unclaimed prepayment credit is allocable to Adjustment #2, the portion of the underpayment attributable to that adjustment is $7,856 ($9,356—$1,500). The portions of the underpayment attributable to Adjustments #1 and #3 remain the same.

Example 3. The facts are the same as in *Example 1* except that the taxpayers made a timely estimated tax payment of $1,500 for 1989 which they failed to claim (and which the Service had not previously allowed). This unclaimed prepayment credit is not allocable to any particular adjustment. Therefore, the credit is allocated first to the portion of the underpayment on which no penalty is imposed ($150). The remaining amount ($1,350) is allocated next to the 20 percent penalty portion of the underpayment ($9,356).

Thus, the portion of the underpayment that is not penalized is zero ($150—$150), the portion subject to a 20 percent penalty is $8,006 ($9,356—$1,350) and the portion subject to a 75 percent penalty is unchanged at $13,948.

[T.D. 8381, 56 FR 67507, Dec. 31, 1991; T.D. 8381, 57 FR 6165, Feb. 20, 1992]

§ 1.6664–4 Reasonable cause and good faith exception to section 6662 penalties.

(a) *In general.* No penalty may be imposed under section 6662 with respect to any portion of an underpayment upon a showing by the taxpayer that there was reasonable cause for, and the taxpayer acted in good faith with respect to, such portion. Rules for determining whether the reasonable cause and good faith exception applies are set forth in paragraphs (b) through (g) of this section.

(b) *Facts and circumstances taken into account*—(1) *In general.* The determination of whether a taxpayer acted with reasonable cause and in good faith is made on a case-by-case basis, taking into account all pertinent facts and circumstances. (See paragraph (e) of this section for certain rules relating to a substantial understatement penalty attributable to tax shelter items of corporations.) Generally, the most important factor is the extent of the taxpayer's effort to assess the taxpayer's proper tax liability. Circumstances that may indicate reasonable cause and good faith include an honest misunderstanding of fact or law that is reasonable in light of all of the facts and circumstances, including the experience, knowledge, and education of the taxpayer. An isolated computational or transcriptional error generally is not inconsistent with reasonable cause and good faith. Reliance on an information return or on the advice of a professional tax advisor or an appraiser does not necessarily demonstrate reasonable cause and good faith. Similarly, reasonable cause and good faith is not necessarily indicated by reliance on facts that, unknown to the taxpayer, are incorrect. Reliance on an information return, professional advice, or other facts, however, constitutes reasonable cause and good faith if, under all the circumstances, such reliance was reasonable and the taxpayer acted in good faith. (See paragraph (c) of this section for certain rules relating to reliance on the advice of others.) For example, reliance on erroneous information (such as an error relating to the cost or adjusted basis of property, the date property was placed in service, or the amount of opening or closing inventory) inadvertently included in data compiled by the various divisions of a multidivisional corporation or in financial books and records prepared by those divisions generally indicates reasonable cause and good faith, provided the corporation employed internal controls and procedures, reasonable under the circumstances, that were designed to identify such factual errors. Reasonable cause and good faith ordinarily is not indicated by the mere fact that there is an appraisal of the value of property. Other factors to consider include the methodology and assumptions underlying the appraisal, the appraised value, the relationship between appraised value and purchase price, the circumstances under which the appraisal was obtained, and the appraiser's relationship to the taxpayer or to the activity in which the property is used. (See paragraph (g) of this section for certain rules relating to appraisals for charitable deduction property.) A taxpayer's reliance on erroneous information reported on a Form W–2, Form 1099, or other information return indicates reasonable cause and good faith, provided the taxpayer did not know or have reason to know that the information was incorrect. Generally, a taxpayer knows, or has reason to know, that the information on an information return is incorrect if such information is inconsistent with other information reported or otherwise furnished to the taxpayer, or with the taxpayer's knowledge of the transaction. This knowledge includes, for example, the taxpayer's knowledge of the terms of his employment relationship or of the rate of return on a payor's obligation.

(2) *Examples.* The following examples illustrate this paragraph (b). They do not involve tax shelter items. (See paragraph (e) of this section for certain rules relating to the substantial understatement penalty attributable to the tax shelter items of corporations.)

Example 1. A, an individual calendar year taxpayer, engages B, a professional tax advisor, to give A advice concerning the deductibility of certain state and local taxes. A provides B with full details concerning the taxes at issue. B advises A that the taxes are fully deductible. A, in preparing his own tax return, claims a deduction for the taxes. Absent other facts, and assuming the facts and circumstances surrounding B's advice and A's reliance on such advice satisfy the requirements of paragraph (c) of this section, A is considered to have demonstrated good faith by seeking the advice of a professional tax advisor, and to have shown reasonable cause for any underpayment attributable to the deduction claimed for the taxes. However, if A had sought advice from someone that A knew, or should have known, lacked knowledge in the relevant aspects of Federal tax law, or if other facts demonstrate that A failed to act reasonably or in good faith, A would not be considered to have shown reasonable cause or to have acted in good faith.

Example 2. C, an individual, sought advice from D, a friend who was not a tax professional, as to how C might reduce his Federal tax obligations. D advised C that, for a nominal investment in Corporation X, D had received certain tax benefits which virtually eliminated D's Federal tax liability. D also named other investors who had received similar benefits. Without further inquiry, C invested in X and claimed the benefits that he had been assured by D were due him. In this case, C did not make any good faith attempt to ascertain the correctness of what D had advised him concerning his tax matters, and is not considered to have reasonable cause for the underpayment attributable to the benefits claimed.

Example 3. E, an individual, worked for Company X doing odd jobs and filling in for other employees when necessary. E worked irregular hours and was paid by the hour. The amount of E's pay check differed from week to week. The Form W–2 furnished to E reflected wages for 1990 in the amount of $29,729. It did not, however, include compensation of $1,467 paid for some hours E worked. Relying on the Form W–2, E filed a return reporting wages of $29,729. E had no reason to know that the amount reported on the Form W–2 was incorrect. Under the circumstances, E is considered to have acted in good faith in relying on the Form W–2 and to have reasonable cause for the underpayment attributable to the unreported wages.

Example 4. H, an individual, did not enjoy preparing his tax returns and procrastinated in doing so until April 15th. On April 15th, H hurriedly gathered together his tax records and materials, prepared a return, and mailed it before midnight. The return contained numerous errors, some of which were in H's favor and some of which were not. The net result of all the adjustments, however, was an underpayment of tax by H. Under these circumstances, H is not considered to have reasonable cause for the underpayment or to have acted in good faith in attempting to file an accurate return.

(c) *Reliance on opinion or advice*—(1) *Facts and circumstances; minimum requirements.* All facts and circumstances must be taken into account in determining whether a taxpayer has reasonably relied in good faith on advice (including the opinion of a professional tax advisor) as to the treatment of the taxpayer (or any entity, plan, or arrangement) under Federal tax law. However, in no event will a taxpayer be considered to have reasonably relied in good faith on advice unless the requirements of this paragraph (c)(1) are satisfied. The fact that these requirements are satisfied will not necessarily establish that the taxpayer reasonably relied on the advice (including the opinion of a professional tax advisor) in good faith. For example, reliance may not be reasonable or in good faith if the taxpayer knew, or should have known, that the advisor lacked knowledge in the relevant aspects of Federal tax law.

(i) *All facts and circumstances considered.* The advice must be based upon all pertinent facts and circumstances and the law as it relates to those facts and circumstances. For example, the advice must take into account the taxpayer's purposes (and the relative weight of such purposes) for entering into a transaction and for structuring a transaction in a particular manner. In addition, the requirements of this paragraph (c)(1) are not satisfied if the taxpayer fails to disclose a fact that it knows, or should know, to be relevant to the proper tax treatment of an item.

(ii) *No unreasonable assumptions.* The advice must not be based on unreasonable factual or legal assumptions (including assumptions as to future events) and must not unreasonably rely on the representations, statements, findings, or agreements of the taxpayer or any other person. For example, the advice must not be based upon a representation or assumption which the taxpayer knows, or has reason to know, is unlikely to be true, such as an inaccurate representation or assumption as to the taxpayer's purposes for entering into a transaction or

for structuring a transaction in a particular manner.

(2) *Advice defined.* Advice is any communication, including the opinion of a professional tax advisor, setting forth the analysis or conclusion of a person, other than the taxpayer, provided to (or for the benefit of) the taxpayer and on which the taxpayer relies, directly or indirectly, with respect to the imposition of the section 6662 accuracy-related penalty. Advice does not have to be in any particular form.

(3) *Cross-reference.* For rules applicable to advisors, see e.g., §§1.6694–1 through 1.6694–3 (regarding preparer penalties), 31 CFR 10.22 (regarding diligence as to accuracy), 31 CFR 10.33 (regarding tax shelter opinions), and 31 CFR 10.34 (regarding standards for advising with respect to tax return positions and for preparing or signing returns).

(d) *Pass-through items.* The determination of whether a taxpayer acted with reasonable cause and in good faith with respect to an underpayment that is related to an item reflected on the return of a pass-through entity is made on the basis of all pertinent facts and circumstances, including the taxpayer's own actions, as well as the actions of the pass-through entity.

(e) *Special rules for substantial understatement penalty attributable to tax shelter items of corporations*—(1) *In general; facts and circumstances.* The determination of whether a corporation acted with reasonable cause and in good faith in its treatment of a tax shelter item (as defined in §1.6662–4(g)(3)) is based on all pertinent facts and circumstances. Paragraphs (e)(2), (3), and (4) of this section set forth rules that apply, in the case of a penalty attributable to a substantial understatement of income tax (within the meaning of section 6662(d)), in determining whether a corporation acted with reasonable cause and in good faith with respect to a tax shelter item.

(2) *Reasonable cause based on legal justification*—(i) *Minimum requirements.* A corporation's legal justification (as defined in paragraph (e)(2)(ii) of this section) may be taken into account, as appropriate, in establishing that the corporation acted with reasonable cause and in good faith in its treatment of a tax shelter item only if the authority requirement of paragraph (e)(2)(i)(A) of this section and the belief requirement of paragraph (e)(2)(i)(B) of this section are satisfied (the minimum requirements). Thus, a failure to satisfy the minimum requirements will preclude a finding of reasonable cause and good faith based (in whole or in part) on the corporation's legal justification.

(A) *Authority requirement.* The authority requirement is satisfied only if there is substantial authority (within the meaning of §1.6662–4(d)) for the tax treatment of the item.

(B) *Belief requirement.* The belief requirement is satisfied only if, based on all facts and circumstances, the corporation reasonably believed, at the time the return was filed, that the tax treatment of the item was more likely than not the proper treatment. For purposes of the preceding sentence, a corporation is considered reasonably to believe that the tax treatment of an item is more likely than not the proper tax treatment if (without taking into account the possibility that a return will not be audited, that an issue will not be raised on audit, or that an issue will be settled)—

(*1*) The corporation analyzes the pertinent facts and authorities in the manner described in §1.6662–4(d)(3)(ii), and in reliance upon that analysis, reasonably concludes in good faith that there is a greater than 50-percent likelihood that the tax treatment of the item will be upheld if challenged by the Internal Revenue Service; or

(*2*) The corporation reasonably relies in good faith on the opinion of a professional tax advisor, if the opinion is based on the tax advisor's analysis of the pertinent facts and authorities in the manner described in §1.6662–4(d)(3)(ii) and unambiguously states that the tax advisor concludes that there is a greater than 50-percent likelihood that the tax treatment of the item will be upheld if challenged by the Internal Revenue Service. (For this purpose, the requirements of paragraph (c) of this section must be met with respect to the opinion of a professional tax advisor.)

(ii) *Legal justification defined.* For purposes of this paragraph (e), *legal justification* includes any justification relating to the treatment or characterization under the Federal tax law of the tax shelter item or of the entity, plan, or arrangement that gave rise to the item. Thus, a taxpayer's belief (whether independently formed or based on the advice of others) as to the merits of the taxpayer's underlying position is a legal justification.

(3) *Minimum requirements not dispositive.* Satisfaction of the minimum requirements of paragraph (e)(2) of this section is an important factor to be considered in determining whether a corporate taxpayer acted with reasonable cause and in good faith, but is not necessarily dispositive. For example, depending on the circumstances, satisfaction of the minimum requirements may not be dispositive if the taxpayer's participation in the tax shelter lacked significant business purpose, if the taxpayer claimed tax benefits that are unreasonable in comparison to the taxpayer's investment in the tax shelter, or if the taxpayer agreed with the organizer or promoter of the tax shelter that the taxpayer would protect the confidentiality of the tax aspects of the structure of the tax shelter.

(4) *Other factors.* Facts and circumstances other than a corporation's legal justification may be taken into account, as appropriate, in determining whether the corporation acted with reasonable cause and in good faith with respect to a tax shelter item regardless of whether the minimum requirements of paragraph (e)(2) of this section are satisfied.

(f) *Tranactions between persons described in section 482 and net section 482 transfer price adjustments.* [Reserved]

(g) *Valuation misstatements of charitable deduction property*—(1) *In general.* There may be reasonable cause and good faith with respect to a portion of an underpayment that is attributable to a substantial (or gross) valuation misstatement of charitable deduction property (as defined in paragraph (g)(2) of this section) only if—

(i) The claimed value of the property was based on a qualified appraisal (as defined in paragraph (g)(2) of this section) by a qualified appraiser (as defined in paragraph (g)(2) of this section); and

(ii) In addition to obtaining a qualified appraisal, the taxpayer made a good faith investigation of the value of the contributed property.

(2) *Definitions.* For purposes of this paragraph (g):

Charitable deduction property means any property (other than money or publicly traded securities, as defined in §1.170A–13(c)(7)(xi)) contributed by the taxpayer in a contribution for which a deduction was claimed under section 170.

Qualified appraisal means a qualified appraisal as defined in §1.170A–13(c)(3).

Qualified appraiser means a qualified appraiser as defined in §1.170A–13(c)(5).

(3) *Special rules.* The rules of this paragraph (g) apply regardless of whether §1.170A–13 permits a taxpayer to claim a charitable contribution deduction for the property without obtaining a qualified appraisal. The rules of this paragraph (g) apply in addition to the generally applicable rules concerning reasonable cause and good faith.

[T.D. 8381, 56 FR 67508, Dec. 31, 1991; T.D. 8381, 57 FR 6166, Feb. 20, 1992, as amended by T.D. 8617, 60 FR 45666, Sept. 1, 1995; T.D. 8790, 63 FR 66435, Dec. 2, 1998]

§1.6664–4T Reasonable cause and good faith exception to section 6662 penalties.

(a)–(e) [Reserved]

(f) *Transactions between persons described in section 482 and net section 482 transfer price adjustments.* For purposes of applying the reasonable cause and good faith exception of section 6664(c) to net section 482 adjustments, the rules of §1.6662–6(d) apply. A taxpayer that does not satisfy the rules of §1.6662–6(d) for a net section 482 adjustment cannot satisfy the reasonable cause and good faith exception under section 6664(c). The rules of this section apply to underpayments subject to the transactional penalty in §1.6662–6(b). If the standards of the net section 482 penalty exclusion provisions under §1.6662–6(d) are met with respect to such underpayments, then the taxpayer will be considered to have acted

with reasonable cause and good faith for purposes of this section.

[T.D. 8656, 61 FR 4885, Feb. 9, 1996]

§ 1.6694–0 Table of contents.

This section lists the captions that appear in §§ 1.6694–1 through 1.6694–4.

§ 1.6694–1 Section 6694 penalties applicable to income tax return preparer.

(a) Overview.
(b) Income tax return preparer.
(1) In general.
(2) Signing and nonsigning preparers.
(3) Example.
(c) Understatement of liability.
(d) Abatement of penalty where taxpayer's liability not understated.
(e) Verification of information furnished by taxpayer.
(1) In general.
(2) Example.
(f) Effective date.

§ 1.6694–2 Penalty for understatement due to an unrealistic position.

(a) In general.
(1) Proscribed conduct.
(2) Special rule for employers and partnerships.
(b) Realistic possibility of being sustained on its merits.
(1) In general.
(2) Authorities.
(3) Examples.
(4) Written determinations.
(5) When ''realistic possibility'' determined.
(i) Signing preparers.
(ii) Nonsigning preparers.
(c) Exception for adequate disclosure of nonfrivolous positions.
(1) In general.
(2) Frivolous.
(3) Adequate disclosure.
(i) Signing preparers.
(ii) Nonsigning preparers.
(A) Advice to taxpayers.
(B) Advice to another preparer.
(d) Exception for reasonable cause and good faith.
(1) Nature of the error causing the understatement.
(2) Frequency of errors.
(3) Materiality of errors.
(4) Preparer's normal office practice.
(5) Reliance on advice of another preparer.
(e) Burden of proof.

§ 1.6694–3 Penalty for understatement due to willful, reckless, or intentional conduct.

(a) In general.
(1) Proscribed conduct.
(2) Special rule for employers and partnerships.
(b) Willful attempt to understate liability.
(c) Reckless or intentional disregard.
(d) Examples.
(e) Adequate disclosure.
(1) Signing preparers.
(2) Nonsigning preparers.
(i) Advice to taxpayers.
(ii) Advice to another preparer.
(f) Rules or regulations.
(g) Section 6694(b) penalty reduced by section 6694(a) penalty.
(h) Burden of proof.

§ 1.6694–4 Extension of period of collection where preparer pays 15 percent of a penalty for understatement of taxpayer's liability and certain other procedural matters.

(a) In general.
(b) Preparer must bring suit in district court to determine liability for penalty.
(c) Suspension of running of period of limitations on collection.
(d) Effective date.

[T.D. 8382, 56 FR 67514, Dec. 31, 1991]

§ 1.6694–1 Section 6694 penalties applicable to income tax return preparer.

(a) *Overview.* Section 6694(a) and section 6694(b) impose penalties on income tax return preparers for certain understatements of liability on a return or claim for refund. The section 6694(a) penalty is imposed for an understatement of liability with respect to tax imposed by subtitle A of the Internal Revenue Code that is due to a position for which there was not a realistic possibility of being sustained on its merits. The section 6694(b) penalty is imposed for an understatement of liability with respect to tax imposed by subtitle A of the Internal Revenue Code that is due to a willful attempt to understate tax liability or that is due to reckless or intentional disregard of rules or regulations. See § 1.6694–2 for rules relating to the penalty under section 6694(a). See § 1.6694–3 for rules relating to the penalty under section 6694(b).

(b) *Income tax return preparer*—(1) *In general.* Solely for purposes of the regulations under section 6694, the term ''income tax return preparer'' (''preparer'') means any person who is an income tax return preparer within the meaning of section 7701(a)(36) and § 301.7701–15 of this chapter, except that no more than one individual associated with a firm (for example, as a partner

or employee) is treated as a preparer with respect to the same return or claim for refund. If a signing preparer is associated with a firm, that individual, and no other individual associated with the firm, is a preparer with respect to the return or claim for purposes of section 6694. If two or more individuals associated with a firm are income tax return preparers with respect to a return or claim for refund, within the meaning of section 7701(a)(36) and § 301.7701–15 of this chapter, and none of them is the signing preparer, only one of the individuals is a preparer (i.e., nonsigning preparer) with respect to that return or claim for purposes of section 6694. In such a case, ordinarily, the individual who is a preparer for purposes of section 6694 is the individual with overall supervisory responsibility for the advice given by the firm with respect to the return or claim. To the extent provided in § 1.6694–2(a)(2) and § 1.6694–3(a)(2), an individual and the firm with which the individual is associated may both be subject to penalty under section 6694 with respect to the same return or claim for refund. If an individual (other than the sole proprietor) who is associated with a sole proprietorship is subject to penalty under section 6694, the sole proprietorship is considered a ''firm'' for purposes of this paragraph.

(2) *Signing and nonsigning preparers.* A ''signing preparer'' is any preparer who signs a return of tax or claim for refund as a preparer. A ''nonsigning preparer'' is any preparer who is not a signing preparer. Examples of nonsigning preparers are preparers who provide advice (written or oral) to a taxpayer or to a preparer who is not associated with the same firm as the preparer who provides the advice.

(3) *Example.* The provisions of paragraph (b) of this section are illustrated by the following example:

Example. Attorney A provides advice to Client C concerning the proper treatment of a significant item on C's income tax return. The advice constitutes preparation of a substantial portion of the return. In preparation for providing that advice, A discusses the matter with Attorney B, who is associated with the same firm as A, but A is the attorney with overall supervisory responsibility for the advice. Neither Attorney A nor any other attorney associated with A's firm signs C's return as a preparer. For purposes of the regulations under section 6694, A is a preparer with respect to C's return and is subject to penalty under section 6694 with respect to C's return. B is not a preparer with respect to C's return and, therefore, is not subject to penalty under section 6694 with respect to a position taken on C's return. This would be true even if B recommends that A advise C to take an undisclosed position that did not satisfy the realistic possibility standard. In addition, since B is not a preparer for purposes of the regulations under section 6694, A may not avoid a penalty under section 6694 with respect to C's return by claiming he relied on the advice of B. See § 1.6694–2(d)(5).

(c) *Understatement of liability.* For purposes of the regulations under section 6694, an ''understatement of liability'' exists if, viewing the return or claim for refund as a whole, there is an understatement of the net amount payable with respect to any tax imposed by subtitle A of the Internal Revenue Code, or an overstatement of the net amount creditable or refundable with respect to any tax imposed by subtitle A of the Internal Revenue Code. The net amount payable in a taxable year with respect to the return for which the preparer engaged in conduct proscribed by section 6694 is not reduced by any carryback. Tax imposed by subtitle A of the Internal Revenue Code does not include additions to the tax provided by section 6654 and section 6655 (relating to underpayments of estimated tax). Except as provided in paragraph (d) of this section, the determination of whether an understatement of liability exists may be made in a proceeding involving the preparer apart from any proceeding involving the taxpayer.

(d) *Abatement of penalty where taxpayer's liability not understated.* If a penalty under section 6694(a) or section 6694(b) concerning a return or claim for refund has been assessed against one or more preparers, and if it is established at any time in a final administrative determination or a final judicial decision that there was no understatement of liability relating to the return or claim for refund, then—

(1) The assessment must be abated; and

(2) If any amount of the penalty was paid, that amount must be refunded to the person or persons who so paid, as if

the payment were an overpayment of tax, without consideration of any period of limitations.

(e) *Verification of information furnished by taxpayer*—(1) *In general*. For purposes of section 6694(a) and section 6694(b), the preparer generally may rely in good faith without verification upon information furnished by the taxpayer. Thus, the preparer is not required to audit, examine or review books and records, business operations, or documents or other evidence in order to verify independently the taxpayer's information. However, the preparer may not ignore the implications of information furnished to the preparer or actually known by the preparer. The preparer must make reasonable inquiries if the information as furnished appears to be incorrect or incomplete. Additionally, some provisions of the Code or regulations require that specific facts and circumstances exist— for example, that the taxpayer maintain specific documents, before a deduction may be claimed. The preparer must make appropriate inquiries to determine the existence of facts and circumstances required by a Code section or regulation as a condition to the claiming of a deduction.

(2) *Example*. The provisions of paragraph (e) of this section are illustrated by the following example:

Example. A taxpayer, during an interview conducted by the preparer, stated that he had paid $6,500 in doctor bills and $5,000 in deductible travel and entertainment expenses during the tax year, when in fact he had paid smaller amounts. On the basis of this information, the preparer properly calculated deductions for medical expenses and for travel and entertainment expenses which resulted in an understatement of liability for tax. The preparer had no reason to believe that the medical expense and travel and entertainment expense information presented was incorrect or incomplete. The preparer did not ask for underlying documentation of the medical expenses but inquired about the existence of travel and entertainment expense records. The preparer was reasonably satisfied by the taxpayer's representations that the taxpayer had adequate records (or other sufficient corroborative evidence) for the deduction of $5,000 for travel and entertainment expenses. The preparer is not subject to a penalty under section 6694.

(f) *Effective date*. Sections 1.6694–1 through 1.6694–3 are generally effective for documents prepared and advice given after December 31, 1991. However, § 1.6694–3(c)(3) (which provides that a preparer is not considered to have recklessly or intentionally disregarded a revenue ruling or notice if the position contrary to the ruling or notice has a realistic possibility of being sustained on its merits) is effective for documents prepared and advice given after December 31, 1989. Except as provided in the preceding sentence, section 6694 and the existing rules and regulations thereunder (to the extent not inconsistent with the statute as amended by the Omnibus Budget Reconciliation Act of 1989), and Notice 90–20, 1990–1 C.B. 328, apply to documents prepared and advice given on or before December 31, 1991. For the effective date of § 1.6694–4, see § 1.6694–4(d).

[T.D. 8382, 56 FR 67514, Dec. 31, 1991; T.D. 8382, 57 FR 6061, Feb. 19, 1992]

§ 1.6694–2 Penalty for understatement due to an unrealistic position.

(a) *In general*—(1) *Proscribed conduct*. Except as otherwise provided in this section, if any part of an understatement of liability relating to a return of tax under subtitle A of the Internal Revenue Code or claim for refund of tax under subtitle A of the Internal Revenue Code is due to a position for which there was not a realistic possibility of being sustained on its merits, any person who is a preparer with respect to such return or claim for refund who knew or reasonably should have known of such position is subject to a penalty of $250 with respect to such return or claim for refund.

(2) *Special rule for employers and partnerships*. An employer or partnership of a preparer subject to penalty under section 6694(a) is also subject to penalty only if—

(i) One or more members of the principal management (or principal officers) of the firm or a branch office participated in or knew of the conduct proscribed by section 6694(a);

(ii) The employer or partnership failed to provide reasonable and appropriate procedures for review of the position for which the penalty is imposed; or

(iii) Such review procedures were disregarded in the formulation of the advice, or the preparation of the return or claim for refund, that included the position for which the penalty is imposed.

(b) *Realistic possibility of being sustained on its merits*—(1) *In general*. A position is considered to have a realistic possibility of being sustained on its merits if a reasonable and well-informed analysis by a person knowledgeable in the tax law would lead such a person to conclude that the position has approximately a one in three, or greater, likelihood of being sustained on its merits (realistic possibility standard). In making this determination, the possibility that the position will not be challenged by the Internal Revenue Service (e.g., because the taxpayer's return may not be audited or because the issue may not be raised on audit) is not to be taken into account. The analysis prescribed by §1.6662–4(d)(3)(ii) for purposes of determining whether substantial authority is present applies for purposes of determining whether the realistic possibility standard is satisfied.

(2) *Authorities*. The authorities considered in determining whether a position satisfies the realistic possibility standard are those authorities provided in §1.6662–4(d)(3)(iii).

(3) *Examples*. The provisions of paragraphs (b)(1) and (b)(2) of this section are illustrated by the following examples:

Example 1. A new statute is unclear as to whether a certain transaction that a taxpayer has engaged in will result in favorable tax treatment. Prior law, however, supported the taxpayer's position. There are no regulations under the new statute and no authority other than the statutory language and committee reports. The committee reports state that the intent was not to adversely affect transactions similar to the taxpayer's transaction. The taxpayer's position satisfies the realistic possibility standard.

Example 2. A taxpayer has engaged in a transaction that is adversely affected by a new statutory provision. Prior law supported a position favorable to the taxpayer. The preparer believes that the new statute is inequitable as applied to the taxpayer's situation. The statutory language is unambiguous as it applies to the transaction (e.g., it applies to all manufacturers and the taxpayer is a manufacturer of widgets). The committee reports do not specifically address the taxpayer's situation. A position contrary to the statute does not satisfy the realistic possibility standard.

Example 3. The facts are the same as in *Example 2*, except the committee reports indicate that Congress did not intend to apply the new statutory provision to the taxpayer's transaction (e.g., to a manufacturer of widgets). Thus, there is a conflict between the general language of the statute, which adversely affects the taxpayer's transaction, and a specific statement in the committee reports that transactions such as the taxpayer's are not adversely affected. A position consistent with either the statute or the committee reports satisfies the realistic possibility standard. However, a position consistent with the committee reports constitutes a disregard of a rule or regulation and, therefore, must be adequately disclosed in order to avoid the section 6694(b) penalty.

Example 4. The instructions to an item on a tax form published by the Internal Revenue Service are incorrect and are clearly contrary to the regulations. Before the return is prepared, the Internal Revenue Service publishes an announcement acknowledging the error and providing the correct instruction. Under these facts, a position taken on a return which is consistent with the regulations satisfies the realistic possibility standard. On the other hand, a position taken on a return which is consistent with the incorrect instructions does not satisfy the realistic possibility standard. However, if the preparer relied on the incorrect instructions and was not aware of the announcement or the regulations, the reasonable cause and good faith exception may apply depending on all facts and circumstances. See §1.6694–2(d).

Example 5. A statute is silent as to whether a taxpayer may take a certain position on the taxpayer's 1991 Federal income tax return. Three private letter rulings issued to other taxpayers in 1987 and 1988 support the taxpayer's position. However, proposed regulations issued in 1990 are clearly contrary to the taxpayer's position. After the issuance of the proposed regulations, the earlier private letter rulings cease to be authorities and are not taken into account in determining whether the taxpayer's position satisfies the realistic possibility standard. See §1.6694–2(b)(2) and §1.6662–4(d)(3)(iii). The taxpayer's position may or may not satisfy the realistic possibility standard, depending on an analysis of all the relevant authorities.

Example 6. In the course of researching whether a particular position has a realistic possibility of being sustained on its merits, a preparer discovers that a taxpayer took the same position on a return several years ago and that the return was audited by the Service. The taxpayer tells the preparer that the revenue agent who conducted the audit was

aware of the position and decided that the treatment on the return was correct. The revenue agent's report, however, made no mention of the position. The determination by the revenue agent is not authority for purposes of the realistic possibility standard. However, the preparer's reliance on the revenue agent's determination in the audit may qualify for the reasonable cause and good faith exception depending on all facts and circumstances. See §1.6694–2(d). Also see §1.6694–2(b)(4) and §1.6662–4(d)(3)(iv)(A) regarding affirmative statements in a revenue agent's report.

Example 7. In the course of researching whether an interpretation of a phrase incorporated in the Internal Revenue Code has a realistic possibility of being sustained on its merits, a preparer discovers that identical language in the taxing statute of another jurisdiction (e.g., a state or foreign country) has been authoritatively construed by a court of that jurisdiction in a manner which would be favorable to the taxpayer, if the same interpretation were applied to the phrase applicable to the taxpayer's situation. The construction of the statute of the other jurisdiction is not authority for purposes of determining whether the position satisfies the realistic possibility standard. See §1.6694–2(b)(2) and §1.6662–4(d)(3)(iii). However, as in the case of conclusions reached in treatises and legal periodicals, the authorities underlying the court's opinion, if relevant to the taxpayer's situation, may give a position favorable to the taxpayer a realistic possibility of being sustained on its merits. See §1.6694–2(b)(2) and §1.6662–4(d)(3)(iii).

Example 8. In the course of researching whether an interpretation of a statutory phrase has a realistic possibility of being sustained on its merits, a preparer discovers that identical language appearing in another place in the Internal Revenue Code has consistently been interpreted by the courts and by the Service in a manner which would be favorable to the taxpayer, if the same interpretation were applied to the phrase applicable to the taxpayer's situation. No authority has interpreted the phrase applicable to the taxpayer's situation. The interpretations of the identical language are relevant in arriving at a well reasoned construction of the language at issue, but the context in which the language arises also must be taken into account in determining whether the realistic possibility standard is satisfied.

Example 9. A new statutory provision is silent on the tax treatment of an item under the provision. However, the committee reports explaining the provision direct the Treasury to issue regulations interpreting the provision in a specified way. No regulations have been issued at the time the preparer must recommend a position on the tax treatment of the item, and no other authorities exist. The position supported by the committee reports satisfies the realistic possibility standard.

(4) *Written determinations.* To the extent a position has substantial authority with respect to the taxpayer by virtue of a ''written determination'' as provided in §1.6662–4(d)(3)(iv)(A), such position will be considered to satisfy the realistic possibility standard with respect to the taxpayer's preparer for purposes of section 6694(a).

(5) *When ''realistic possibility'' determined.* For purposes of this section, the requirement that a position satisfy the realistic possibility standard must be satisfied on the date prescribed by paragraph (b)(5)(i) or (b)(5)(ii) of this section, whichever is applicable.

(i) *Signing preparers*—(A) In the case of a signing preparer, the relevant date is the date the preparer signs and dates the return or claim for refund.

(B) If the preparer did not date the return or claim for refund, the relevant date is the date the taxpayer signed and dated the return or claim for refund. If the taxpayer also did not date the return or claim for refund, the relevant date is the date the return or claim for refund was filed.

(ii) *Nonsigning preparers.* In the case of a nonsigning preparer, the relevant date is the date the preparer provides the advice. That date will be determined based on all the facts and circumstances.

(c) *Exception for adequate disclosure of nonfrivolous positions*—(1) *In general.* The section 6694(a) penalty will not be imposed on a preparer if the position taken is not frivolous and is adequately disclosed. For an exception to the section 6694(a) penalty for reasonable cause and good faith, see paragraph (d) of this section.

(2) *Frivolous.* For purposes of this section, a ''frivolous'' position with respect to an item is one that is patently improper.

(3) *Adequate disclosure*—(i) *Signing preparers.* In the case of a signing preparer, disclosure of a position that does not satisfy the realistic possibility standard is adequate only if the disclosure is made in accordance with §1.6662–4(f) (which permits disclosure on a properly completed and filed Form 8275 or 8275–R, as appropriate, or on the

return in accordance with an annual revenue procedure).

(ii) *Nonsigning preparers.* In the case of a nonsigning preparer, disclosure of a position that does not satisfy the realistic possibility standard is adequate if the position is disclosed in accordance with §1.6662–4(f) (which permits disclosure on a properly completed and filed Form 8275 or 8275–R, as appropriate, or on the return in accordance with an annual revenue procedure). In addition, disclosure of a position is adequate in the case of a nonsigning preparer if, with respect to that position, the preparer complies with the provisions of paragraph (c)(3)(ii)(A) or (B) of this section, whichever is applicable.

(A) *Advice to taxpayers.* If a nonsigning preparer provides advice to the taxpayer with respect to a position that does not satisfy the realistic possibility standard, disclosure of that position is adequate if the advice includes a statement that the position lacks substantial authority and, therefore, may be subject to penalty under section 6662(d) unless adequately disclosed in the manner provided in §1.6662–4(f) (or in the case of a tax shelter item, that the position lacks substantial authority and, therefore, may be subject to penalty under section 6662(d) regardless of disclosure). If the advice with respect to the position is in writing, the statement concerning disclosure (or the statement regarding possible penalty under section 6662(d)) also must be in writing. If the advice with respect to the position is oral, advice to the taxpayer concerning the need to disclose (or the advice regarding possible penalty under section 6662(d)) also may be oral. The determination as to whether oral advice as to disclosure (or the oral advice regarding possible penalty under section 6662(d)) was in fact given is based on all facts and circumstances. Contemporaneously prepared documentation of the oral advice regarding disclosure (or the oral advice regarding possible penalty under section 6662(d)) generally is sufficient to establish that the advice was given to the taxpayer.

(B) *Advice to another preparer.* If a nonsigning preparer provides advice to another preparer with respect to a position that does not satisfy the realistic possibility standard, disclosure of that position is adequate if the advice includes a statement that disclosure under section 6694(a) is required. If the advice with respect to the position is in writing, the statement concerning disclosure also must be in writing. If the advice with respect to the position is oral, advice to the preparer concerning the need to disclose also may be oral. The determination as to whether oral advice as to disclosure was in fact given is based on all facts and circumstances. Contemporaneously prepared documentation of the oral advice regarding disclosure generally is sufficient to establish that the advice regarding disclosure was given to the other preparer.

(d) *Exception for reasonable cause and good faith.* The penalty under section 6694(a) will not be imposed if considering all the facts and circumstances, it is determined that the understatement was due to reasonable cause and that the preparer acted in good faith. Factors to consider include:

(1) *Nature of the error causing the understatement.* Whether the error resulted from a provision that was so complex, uncommon, or highly technical that a competent preparer of returns or claims of the type at issue reasonably could have made the error. The reasonable cause and good faith exception does not apply to an error that would have been apparent from a general review of the return or claim for refund by the preparer.

(2) *Frequency of errors.* Whether the understatement was the result of an isolated error (such as an inadvertent mathematical or clerical error) rather than a number of errors. Although the reasonable cause and good faith exception generally applies to an isolated error, it does not apply if the isolated error is so obvious, flagrant or material that it should have been discovered during a review of the return or claim. Furthermore, the reasonable cause and good faith exception does not apply if there is a pattern of errors on a return or claim for refund even though any one error, in isolation, would have qualified for the reasonable cause and good faith exception.

(3) *Materiality of errors.* Whether the understatement was material in relation to the correct tax liability. The reasonable cause and good faith exception generally applies if the understatement is of a relatively immaterial amount. Nevertheless, even an immaterial understatement may not qualify for the reasonable cause and good faith exception if the error or errors creating the understatement are sufficiently obvious or numerous.

(4) *Preparer's normal office practice.* Whether the preparer's normal office practice, when considered together with other facts and circumstances such as the knowledge of the preparer, indicates that the error in question would rarely occur and the normal office practice was followed in preparing the return or claim in question. Such a normal office practice must be a system for promoting accuracy and consistency in the preparation of returns or claims and generally would include, in the case of a signing preparer, checklists, methods for obtaining necessary information from the taxpayer, a review of the prior year's return, and review procedures. Notwithstanding the above, the reasonable cause and good faith exception does not apply if there is a flagrant error on a return or claim for refund, a pattern of errors on a return or claim for refund, or a repetition of the same or similar errors on numerous returns or claims.

(5) *Reliance on advice of another preparer.* Whether the preparer relied on the advice of or schedules prepared by (''advice'') another preparer as defined in §1.6694–1(b). The reasonable cause and good faith exception applies if the preparer relied in good faith on the advice of another preparer (or a person who would be considered a preparer under §1.6694–1(b) had the advice constituted preparation of a substantial portion of the return or claim for refund) who the preparer had reason to believe was competent to render such advice. A preparer is not considered to have relied in good faith if—

(i) The advice is unreasonable on its face;

(ii) The preparer knew or should have known that the other preparer was not aware of all relevant facts; or

(iii) The preparer knew or should have known (given the nature of the preparer's practice), at the time the return or claim for refund was prepared, that the advice was no longer reliable due to developments in the law since the time the advice was given.

The advice may be written or oral, but in either case the burden of establishing that the advice was received is on the preparer.

(e) *Burden of proof.* In any proceeding with respect to the penalty imposed by section 6694(a), the issues on which the preparer bears the burden of proof include whether—

(1) The preparer knew or reasonably should have known that the questioned position was taken on the return;

(2) There is reasonable cause and good faith with respect to such position; and

(3) The position was disclosed adequately in accordance with paragraph (c) of this section.

[T.D. 8382, 56 FR 67516, Dec. 31, 1991; T.D. 8382, 57 FR 6061, Feb. 19, 1992]

§ 1.6694–3 Penalty for understatement due to willful, reckless, or intentional conduct.

(a) *In general*—(1) *Proscribed conduct.* If any part of an understatement of liability relating to a return of tax under subtitle A of the Internal Revenue Code or claim for refund of tax under subtitle A of the Internal Revenue Code is due to—

(i) A willful attempt in any manner to understate the liability for tax by a preparer of the return or claim for refund; or

(ii) Any reckless or intentional disregard of rules or regulations by any such person,

such preparer is subject to a penalty of $1,000 with respect to such return or claim for refund.

(2) *Special rule for employers and partnerships.* An employer or partnership of a preparer subject to penalty under section 6694(b) is also subject to penalty only if—

(i) One or more members of the principal management (or principal officers) of the firm or a branch office participated in or knew of the conduct proscribed by section 6694(b);

(ii) The employer or partnership failed to provide reasonable and appropriate procedures for review of the position for which the penalty is imposed; or

(iii) Such review procedures were disregarded in the formulation of the advice, or the preparation of the return or claim for refund, that included the position for which the penalty is imposed.

(b) *Willful attempt to understate liability*. A preparer is considered to have willfully attempted to understate liability if the preparer disregards, in an attempt wrongfully to reduce the tax liability of the taxpayer, information furnished by the taxpayer or other persons. For example, if a preparer disregards information concerning certain items of taxable income furnished by the taxpayer or other persons, the preparer is subject to the penalty. Similarly, if a taxpayer states to a preparer that the taxpayer has only two dependents, and the preparer reports six dependents on the return, the preparer is subject to the penalty.

(c) *Reckless or intentional disregard*. (1) Except as provided in paragraphs (c)(2) and (c)(3) of this section, a preparer is considered to have recklessly or intentionally disregarded a rule or regulation if the preparer takes a position on the return or claim for refund that is contrary to a rule or regulation (as defined in paragraph (f) of this section) and the preparer knows of, or is reckless in not knowing of, the rule or regulation in question. A preparer is reckless in not knowing of a rule or regulation if the preparer makes little or no effort to determine whether a rule or regulation exists, under circumstances which demonstrate a substantial deviation from the standard of conduct that a reasonable preparer would observe in the situation.

(2) A preparer is not considered to have recklessly or intentionally disregarded a rule or regulation if the position contrary to the rule or regulation is not frivolous as defined in § 1.6694–2(c)(2), is adequately disclosed in accordance with paragraph (e) of this section and, in the case of a position contrary to a regulation, the position represents a good faith challenge to the validity of the regulation.

(3) In the case of a position contrary to a revenue ruling or notice (other than a notice of proposed rulemaking) published by the Service in the Internal Revenue Bulletin, a preparer also is not considered to have recklessly or intentionally disregarded the ruling or notice if the position has a realistic possibility of being sustained on its merits.

(d) *Examples*. The provisions of paragraphs (b) and (c) of this section are illustrated by the following examples:

Example 1. A taxpayer provided a preparer with detailed check registers reflecting personal and business expenses. One of the expenses was for domestic help, and this expense was identified as personal on the check register. The preparer knowingly deducted the expenses of the taxpayer's domestic help as wages paid in the taxpayer's business. The preparer is subject to the penalty under section 6694(b).

Example 2. A taxpayer provided a preparer with detailed check registers to compute the taxpayer's expenses. However, the preparer knowingly overstated the expenses on the return. After adjustments by the examiner, the tax liability increased significantly. Because the preparer disregarded information provided in the check registers, the preparer is subject to the penalty under section 6694(b).

Example 3. A revenue ruling holds that certain expenses incurred in the purchase of a business must be capitalized. The Code is silent as to whether these expenses must be capitalized or may be deducted currently, but several cases from different courts hold that these particular expenses may be deducted currently. There is no other authority. Under these facts, a position taken contrary to the revenue ruling on a return or claim for refund is not a reckless or intentional disregard of a rule, since the position contrary to the revenue ruling has a realistic possibility of being sustained on its merits. Therefore, the preparer will not be subject to a penalty under section 6694(b) even though the position is not adequately disclosed.

Example 4. Final regulations provide that certain expenses incurred in the purchase of a business must be capitalized. One Tax Court case has expressly invalidated that portion of the regulations. Under these facts, a position contrary to the regulation will subject the preparer to the section 6694(b) penalty even though the position may have a realistic possibility of being sustained on its merits. However, because the contrary position on these facts represents a good faith challenge to the validity of the regulations,

the preparer will not be subject to the section 6694(b) penalty if the position is adequately disclosed in the manner provided in paragraph (e) of this section.

(e) *Adequate disclosure*—(1) *Signing preparers*. In the case of a signing preparer, disclosure of a position that is contrary to a rule or regulation is adequate only if the disclosure is made in accordance with §1.6662–4(f) (1), (3), (4) and (5) (which permit disclosure on a properly completed and filed Form 8275 or 8275–R, as appropriate). In addition, the disclosure of a position that is contrary to a rule or regulation must adequately identify the rule or regulation being challenged. The provisions of §1.6662–4(f)(2) (which permit disclosure on the return in accordance with an annual revenue procedure) do not apply for purposes of this section.

(2) *Nonsigning preparers*. In the case of a nonsigning preparer, disclosure of a position that is contrary to a rule or regulation is adequate if the position is disclosed in the manner provided in paragraph (e)(1) of this section. In addition, disclosure of a position is adequate in the case of a nonsigning preparer if, with respect to that position, the preparer complies with the provisions of paragraph (e)(2) (i) or (ii) of this section, whichever is applicable.

(i) *Advice to taxpayers*. In the case of a nonsigning preparer who provides advice to the taxpayer with respect to a position that is contrary to a rule or regulation, disclosure of that position is adequate if the advice includes a statement that—

(A) The position is contrary to a specified rule or regulation and, therefore, is subject to a penalty described in section 6662(c) unless adequately disclosed in the manner provided in §1.6662–3(c)(2) (which permits disclosure on a properly completed and filed Form 8275 or 8275–R, as appropriate, and which requires adequate identification of any rule or regulation being challenged); and

(B) In the case of a position contrary to a regulation, the position must represent a good faith challenge to the validity of the regulation.

If the advice with respect to the position is in writing, the statement concerning disclosure also must be in writing. If the advice with respect to the position is oral, advice to the taxpayer concerning the need to disclose also may be oral. The determination as to whether oral advice as to disclosure was in fact given is based on all facts and circumstances. Contemporaneously prepared documentation of the oral advice regarding disclosure generally is sufficient to establish that the advice was given to the taxpayer.

(ii) *Advice to another preparer*. If a nonsigning preparer provides advice to another preparer with respect to a position that is contrary to a rule or regulation, disclosure of that position is considered adequate if the advice includes a statement that disclosure under section 6694(b) is required. If the advice with respect to the position is in writing, the statement concerning disclosure also must be in writing. If the advice with respect to the position is oral, advice to the preparer concerning the need to disclose also may be oral. The determination as to whether oral advice as to disclosure was in fact given is based on all facts and circumstances. Contemporaneously prepared documentation of the oral advice regarding disclosure generally is sufficient to establish that the advice was given to the other preparer.

(f) *Rules or regulations*. The term ''rules or regulations'' includes the provisions of the Internal Revenue Code, temporary or final Treasury regulations issued under the Code, and revenue rulings or notices (other than notices of proposed rulemaking) issued by the Internal Revenue Service and published in the Internal Revenue Bulletin.

(g) *Section 6694(b) penalty reduced by section 6694(a) penalty*. The amount of any penalty to which a preparer may be subject under section 6694(b) for a return or claim for refund is $1,000 reduced by any amount assessed and collected against the preparer under section 6694(a) for the same return or claim.

(h) *Burden of proof*. In any proceeding with respect to the penalty imposed by section 6694(b), the Government bears the burden of proof on the issue of whether the preparer willfully attempted to understate the liability for tax. See section 7427. The preparer

bears the burden of proof on such other issues as whether—

(1) The preparer recklessly or intentionally disregarded a rule or regulation;

(2) A position contrary to a regulation represents a good faith challenge to the validity of the regulation; and

(3) Disclosure was adequately made in accordance with paragraph (e) of this section.

[T.D. 8382, 56 FR 67518, Dec. 31, 1991]

§ 1.6694–4 Extension of period of collection where preparer pays 15 percent of a penalty for understatement of taxpayer's liability and certain other procedural matters.

(a) *In general.* (1) The Internal Revenue Service will investigate the preparation by a preparer of a return of tax under subtitle A of the Internal Revenue Code or claim for refund of tax under subtitle A of the Internal Revenue Code and will send a report of the examination to the preparer before the assessment of either—

(i) A penalty for understating tax liability due to a position for which there was not a realistic possibility of being sustained on its merits under section 6694(a); or

(ii) A penalty for willful understatement of liability or reckless or intentional disregard of rules or regulations under section 6694(b).

Unless the period of limitations (if any) under section 6696(d) may expire without adequate opportunity for assessment, the Internal Revenue Service will also send, before assessment of either penalty, a 30-day letter to the preparer notifying him of the proposed penalty or penalties and offering an opportunity to the preparer to request further administrative consideration and a final administrative determination by the Internal Revenue Service concerning the assessment. If the preparer then makes a timely request, assessment may not be made until the Internal Revenue Service makes a final administrative determination adverse to the preparer.

(2) If the Internal Revenue Service assesses either of the two penalties described in section 6694(a) and section 6694(b), it will send to the preparer a statement of notice and demand, separate from any notice of a tax deficiency, for payment of the amount assessed.

(3) Within 30 days ofter the day on which notice and demand of either of the two penalties described in section 6694(a) and section 6694(b) is made against the preparer, the preparer must either—

(i) Pay the entire amount assessed (and may file a claim for refund of the amount paid at any time not later than 3 years after the date of payment); or

(ii) Pay an amount which is not less than 15 percent of the entire amount assessed with respect to each return or claim for refund and file a claim for refund of the amount paid.

(4) If the preparer pays an amount and files a claim for refund under paragraph (a)(3)(ii) of this section, the Internal Revenue Service may not make, begin, or prosecute a levy or proceeding in court for collection of the unpaid remainder of the amount assessed until the later of—

(i) A date which is more than 30 days after the earlier of—

(A) The day on which the preparer's claim for refund is denied; or

(B) The expiration of 6 months after the day on which the preparer filed the claim for refund; and

(ii) Final resolution of any proceeding begun as provided in paragraph (b) of this section.

However, the Internal Revenue Service may counterclaim in any proceeding begun as provided in paragraph (b) of this section for the unpaid remainder of the amount asssessed. Final resolution of a proceeding includes any settlement between the Internal Revenue Service and the preparer, any final determination by a court (for which the period for appeal, if any, has expired) and, generally, the types of determinations provided under section 1313(a) (relating to taxpayer deficiencies). Notwithstanding section 7421(a) (relating to suits to restrain asssessment or collection), the beginning of a levy or proceeding in court by the Internal Revenue Service in contravention of this paragraph (a)(4) may be enjoined by a proceeding in the proper court.

(b) *Preparer must bring suit in district court to determine liability for penalty.* If, within 30 days after the earlier of—

(1) The day on which the preparer's claim for refund filed under paragraph (a)(3)(ii) of this section is denied; or

(2) The expiration of 6 months after the day on which the preparer filed the claim for refund.

The preparer fails to begin a proceeding for refund in the appropriate United States district court, the Internal Revenue Service may proceed with collection of the amount of the penalty not paid under paragraph (a)(3)(ii) of this section.

(c) *Suspension of running of period of limitations on collection.* The running of the period of limitations provided in section 6502 on the collection by levy or by a proceeding in court of the unpaid amount of a penalty or penalties described in section 6694(a) or section 6694(b) is suspended for the period during which the Internal Revenue Service, under paragraph (a)(4) of this section, may not collect the unpaid amount of the penalty or penalties by levy or a proceeding in court.

(d) *Effective date.* The provisions of this section are effective as of December 19, 1989.

[T.D. 8382, 56 FR 67519, Dec. 31, 1991, T.D. 8382, 57 FR 6061, Feb. 19, 1992]

§ 1.6695–1 Other assessable penalties with respect to the preparation of income tax returns for other persons.

(a) *Failure to furnish copy to taxpayer.* (1) A person who is an income tax return preparer of any return of tax under subtitle A of the Internal Revenue Code or claim for refund of tax under subtitle A of the Internal Revenue Code and who fails to satisfy the requirements imposed by section 6107(a) and § 1.6107–1 (a) and (c) to furnish a copy of the return or claim for refund to the taxpayer (or nontaxable entity), shall be subject to a penalty of $50 for such failure, with a maximum penalty of $25,000 per person imposed with respect to each calendar year, unless it is shown that the failure is due to reasonable cause and not due to willful neglect. Thus, no penalty may be imposed under section 6695(a) and this paragraph (a)(1) upon a person who is an income tax return preparer solely by reason of—

(i) Section 301.7701–15 (a)(2) and (b) on account of having given advice on specific issues of law; or

(ii) Section 301.7701–15(b)(3) on account of having prepared the return solely because of having prepared another return which affects amounts reported on the return.

(2) No penalty may be imposed under section 6695(a) and paragraph (a)(1) of this section upon an income tax return preparer who furnishes a copy of the return or claim for refund to a taxpayer:

(i) Who holds an elected or politically appointed position with the government of the United States or a State or political subdivision thereof; and

(ii) Who, in order faithfully to carry out his official duties, has so arranged his affairs that he has less than full knowledge of the property which he holds or of the debts for which he is responsible, if information is deleted from the copy in order to preserve or maintain this arrangement.

(b) *Failure to sign return.* (1) Unless the Secretary has prescribed another method of signing pursuant to § 301.6061–1(b) of this chapter on or after July 21, 1995, an individual who is an income tax return preparer with respect to a return of tax under subtitle A of the Internal Revenue Code (Code) or claim for refund of tax under subtitle A of the Code shall manually sign the return or claim for refund (which may be a photocopy) in the appropriate space provided on the return or claim for refund after it is completed and before it is presented to the taxpayer (or nontaxable entity) for signature. Except as provided in paragraphs (b)(4)(iii) and (iv) of this section, an individual preparer may not satisfy this requirement by use of a facsimile signature stamp or signed gummed label. If the preparer is unavailable for signature, another preparer shall review the entire preparation of the return or claim for refund, and then shall manually sign the return or claim for refund.

(2) If more than one income tax return preparer is involved in the preparation of the return or claim for refund, the individual preparer who has the primary responsibility as between or among the preparers for the overall

substantive accuracy of the preparation of such return or claim for refund shall be considered to be the income tax return preparer for purposes of this paragraph.

(3) The application of paragraphs (b)(1) and (2) of this section is illustrated by the following examples:

Example (1). X law firm employs Y, a lawyer, to prepare for compensation returns and claims for refund of taxes. X is employed by T, a taxpayer, to prepare his 1977 Federal tax return. X assigns Y to prepare T's return. Y obtains the information necessary for completing the return from T and makes determinations with respect to the proper application of the tax laws to such information in order to determine T's tax liability. Y then forwards such information to C, a computer tax service which performs the mathematical computations and prints the return form by means of computers. C then sends the completed return to Y who reviews the accuracy of the return. Y is the individual preparer who is primarily responsible for the overall accuracy of T's return. Y must sign the return as preparer.

Example (2). X partnership is a national accounting firm which prepares for compensation returns and claims for refund of taxes. A and B, employees of X, are involved in preparing the 1977 tax return of T Corporation. After they complete the return, including the gathering of the necessary information, the proper application of the tax laws to such information, and the performance of the necessary mathematical computations, C, a supervisory employee of X, reviews the return. As part of this review, C reviews the information provided and the application of the tax laws to this information. The mathematical computations and carried-forward amounts are proved by D, an employee of X's comparing and proving department. The policies and practices of X require that P, a partner, finally review the return. The scope of P's review includes reviewing the information provided by applying to this information his knowledge of T's affairs, observing that X's policies and practices have been followed, and making the final determination with respect to the proper application of the tax laws to determine T's tax liability. P may or may not exercise these responsibilities, or may exercise them to a greater or lesser extent, depending on the degree of complexity of the return, his confidence in C (or A and B), and other factors. P is the individual preparer who is primarily responsible for the overall accuracy of T's return. P must sign the return as preparer.

Example (3). C corporation maintains an office in Seattle, Washington, for the purpose of preparing for compensation returns and claims for refund of taxes. C makes compensatory arrangements with individuals (but provides no working facilities) in several States to collect information from taxpayers and to make determinations with respect to the proper application of the tax laws to the information in order to determine the tax liabilities of such taxpayers. E, an individual, who has such an arrangement in Los Angeles with C, collects information from T, a taxpayer, and completes a worksheet kit supplied by C which is stamped with E's name and an identification number assigned to E by C. In this process, E classifies this information in appropriate income and deduction categories for the tax determination. The completed worksheet kit signed by E, is then mailed to C. D, an employee in C's office, reviews the worksheet kit to make sure it was properly completed. D does not review the information obtained from T for its validity or accuracy. D may, but did not, make the final determination with respect to the proper application of tax laws to the information. The data from the worksheet is entered into a computer and the return form is completed. The return is prepared for submission to T with filing instructions. E is the individual preparer primarily responsible for the overall accuracy of T's return. E must sign the return as preparer.

Example (4). X employs A, B, and C to prepare income tax returns for taxpayers. After A and B have collected the information from the taxpayer and applied the tax laws to the information, the return form is completed by computer service. On the day the returns prepared by A and B are ready for their signatures, A is away from the city for 1 week on another assignment and B is on detail to another office for the day. C may sign the returns prepared by A, provided that (i) C reviews the information obtained by A relative to the taxpayer, and (ii) C reviews the preparation of each return prepared by A. C may not sign the returns prepared by B because B is available.

(4)(i) The manual signature requirement of paragraphs (b)(1) and (2) of this section may be satisfied by a photocopy of a copy of the return or claim for refund which copy is manually signed by the preparer after completion of its preparation. After a copy of the return or claim for refund is signed by the preparer and before it is photocopied, no person other than the preparer may alter any entries on the copy other than to correct arithmetical errors discernible on the return or claim for refund. The employer of the preparer or the partnership in which the preparer is a partner, or the preparer (if not employed or engaged by a

preparer and not a partner of a partnership which is a preparer), must retain the manually signed copy of the return or claim for refund. In the alternative, for a return or claim for refund presented to a taxpayer for signature after December 31, 1998, and for returns or claims for refund retained on or before that date, the person required to retain the manually signed copy of the return or claim for refund may choose to retain a photocopy of the manually signed copy of the return or claim for refund, or use an electronic storage system to store and produce a copy of the manually signed return or claim for refund. For purposes of this paragraph (b)(4)(i), an electronic storage system must meet the electronic storage system requirements prescribed in section 4 of Rev. Proc. 97–22 (1997–1 C.B. 652) (see § 601.601(d)(2) of this chapter) or other procedures prescribed by the Commissioner. A record of any arithmetical errors corrected must be retained and made available upon request by the person required to retain the manually signed copy of the return or claim for refund.

(ii) If mechanical preparation of the return or claim for refund is accomplished by computer not under the control of the individual preparer, then the manual signature requirement of paragraphs (b) (1) and (2) of this section may be satisfied by a manually signed attestation by the individual preparer attached to the return or claim for refund that all the information contained in the return or claim for refund was obtained from the taxpayer and is true and correct to the best of his knowledge, but only if that information (including any supplemental written information provided and signed by the preparer) is not altered on the return or claim for refund by another person. For purposes of the preceding sentence, the correction of arithmetical or clerical errors, discernible from the information submitted by the preparer does not constitute an alteration. The information submitted by the preparer shall be retained by the employer of the preparer or by the partnership in which the preparer is a partner, or by the preparer (if not employed or engaged by a preparer and not a partner in a partnership which is a preparer). A record of any arithmetical or clerical errors corrected shall be retained by the person required to retain the information submitted by the preparer and made available upon request.

(iii) A preparer of a return or claim for refund for a nonresident alien individual taxpayer who is authorized to sign the return or claim for refund for the taxpayer may satisfy the manual signature requirement of paragraphs (b) (1) and (2) of this section by a facsimile signature if the preparer is permitted to use a facsimile signature in signing the return or claim for refund for the taxpayer. This subdivision (iii) shall apply only if the preparer submits to the Internal Revenue Service with the returns or claims for refund bearing the preparer's facsimile signature a letter, manually signed by the preparer, indentifying by taxpayer name and identification number each return or claim for refund bearing the facsimile signature and declaring that the facsimile signature appearing on these returns or claims for refund is the signature used by the preparer to sign these documents. After the facsimile signature is affixed, no person other than the preparer may alter any entries on the return or claim for refund other than to correct arithmetical errors discernible on the return or claim for refund. The employer of the preparer or the partnership in which the preparer is a partner, or the preparer (if not employed or engaged by a preparer and not a partner in a partnership which is a preparer) shall retain a manually signed copy of the letter submitted to the Internal Revenue Service with the returns or claims for refund. A record of any arithmetical errors corrected shall be retained by the person required to retain the manually signed letter and made available upon request.

(iv) A preparer of a fiduciary return may satisfy the manual signature requirement of paragraphs (b) (1) and (2) of this section by a facsimile signature only if the preparer submits to the Internal Revenue Service with the returns bearing the preparer's facsimile signature a letter, manually signed by the preparer, identifying by taxpayer name and identification number each return bearing the facsimile signature

and declaring under penalties of perjury that the facsimile signature appearing on these returns is the signature used by the preparer to sign these documents. After the facsimile signature is affixed, no person other than the preparer may alter any entries on the return other than to correct arithmetical errors discernable on the return. The employer of the preparer or the partnership in which the preparer is a partner, or the preparer (if not employed or engaged by a preparer and not a partner in a partnership which is a preparer), shall retain a manually signed copy of the letter submitted to the Internal Revenue Service with the returns. A record of any arithmetical errors corrected shall be retained by the person required to keep the manually signed letter and that person shall make the record available to the Internal Revenue Service upon request. The preparer of a fiduciary claim for refund may not satisfy the manual signature requirement of paragraphs (b) (1) and (2) of this section by a facsimile signature.

(v) Any items required to be retained and kept available for inspection under paragraph (b)(4) (i), (ii), (iii), or (iv) of this section shall be retained and kept available for inspection for the same period that the material described in §1.6107–1(b) must be retained and kept available for inspection.

(vi) If the district director, service center director, or compliance center director (director) determines that a preparer or preparers have abused the permissive signature rules of this paragraph (b)(4), such as by altering the return or claim for refund after signature (in contravention of paragraph (b)(4)(i) of this section), by altering information on the return or claim for refund after attestation (in contravention of paragraph (b)(4)(ii) of this section), or by failing to comply with the provisions of paragraph (b)(4) (iii) or (iv) of this section, then the director may, by written notice, prospectively deny to the preparer or preparers the right to use the permissive signature rules of this paragraph (b)(4).

(5) An individual required by this paragraph (b) to sign a return or claim for refund shall be subject to a penalty of $50 for each failure to sign, with a maximum of $25,000 per person imposed with respect to each calendar year, unless it is shown that the failure is due to reasonable cause and not due to willful neglect. For purposes of this paragraph (b), reasonable cause is a cause which arises despite ordinary care and prudence exercised by the individual preparer. Thus, no penalty may be imposed under section 6695(b) and this paragraph (b) upon a person who is an income tax return preparer solely by reason of—

(i) Section 301.7701–15(a)(2) and (b) on account of having given advice on specific issues of law; or

(ii) Section 301.7701–15(b)(3) on account of having prepared the return solely because of having prepared another return which affects amounts reported on the return.

If the preparer asserts reasonable cause for failure to sign, the Service shall require a written statement in substantiation of the preparer's claim of reasonable cause.

(c) *Failure to furnish identifying number.* (1) A person who is an income tax return preparer of any return of tax under subtitle A of the Internal Revenue Code or claim for refund of tax under subtitle A of the Internal Revenue Code and who fails to satisfy the requirement of section 6109(a)(4) and §1.6109–2(a) to furnish one or more identifying numbers of preparers on a return or claim for refund shall be subject to a penalty of $50 for each failure, with a maximum of $25,000 per person imposed with respect to each calendar year, unless it is shown that the failure is due to reasonable cause and not due to willful neglect. Thus, no penalty may be imposed under section 6695(c) and this paragraph (c)(1) upon a person who is an income tax return preparer solely by reason of—

(i) Section 301.7701–15 (a)(2) and (b) on account of having given advice on specific issues of law; or

(ii) Section 301.7701–15(b)(3) on account of having prepared the return solely because of having prepared another return which affects amounts reported on the return.

(2) No penalty may be imposed under section 6695(c) and paragraph (c)(1) of this section upon:

(i) A preparer who is employed (or engaged) by a person who is also a preparer of the return or claim for refund, or

(ii) A preparer who is a partner in a partnership which is also a preparer of the return or claim for refund.

(3) No more than one penalty of $50 may be imposed under section 6695(c) and paragraph (c)(1) of this section with respect to a single return or claim for refund.

(d) *Failure to retain copy or record.* (1) A person who is an income tax return preparer of any return of tax under subtitle A of the Internal Revenue Code of 1954 or claim for refund of tax under subtitle A of the Internal Revenue Code of 1954 and who fails to satisfy the reruirements imposed upon him by section 6107(b) and § 1.6107–1 (b) and (c) (other than the record requirement described in both § 1.6107–1(b) (2) and (3)) to retain and make available a copy of the return or claim for refund, or to include the return or claim for refund in a record of returns and claims for refund and make the record available for inspection, shall be subject to a penalty of $50 for the failure, unless it is shown that the failure is due to reasonable cause and not due to willful neglect. Thus, no penalty may be imposed under section 6695(d) and this paragraph (d)(1) upon a person who is an income tax return preparer solely by reason of:

(i) Section 301.7701–15 (a)(2) and (b) on account of having given advice on specific issues of law; or

(ii) Section 301.7701–15(b)(3) on account of having prepared the return solely because of having prepared another return which affects amounts reported on the return.

(2) A person may not, for returns or claims for refund presented to the taxpayers (or nontaxable entities) during any single return period, be subject to more than $25,000 in penalties under section 6695(d) and paragraph (d)(1) of this section.

(e) *Failure to file correct information returns.* A person who is subject to the reporting requirements of section 6060 and § 1.6060–1 and who fails to satisfy these requirements shall pay a penalty of $50 for each such failure, with a maximum of $25,000 per person imposed for each calendar year, unless such failure was due to reasonable cause and not due to willful neglect.

(f) *Negotiation of check.* (1) No person who is an income tax return preparer may endorse or otherwise negotiate, directly or through an agent, a check for the refund of tax under subtitle A of the Internal Revenue Code of 1954 which is issued to a taxpayer other than the preparer if the person was a preparer of the return or claim for refund which gave rise to the refund check.

(2) Section 6695(f) and paragraph (f)(1) and (3) of this section do not apply to a preparer-bank which—

(i) Cashes a refund check and remits all of the cash to the taxpayer or accepts a refund check for deposit in full to a taxpayer's account, so long as the bank does not initially endorse or negotiate the check (unless the bank has made a loan to the taxpayer on the basis of the anticipated refund); or

(ii) Endorses a refund check for deposit in full to a taxpayer's account pursuant to a written authorization of the taxpayer (unless the bank has made a loan to the taxpayer on the basis of the anticipated refund).

A preparer-bank may also subsequently endorse or negotiate a refund check as a part of the check-clearing process through the financial system after initial endorsement or negotiation.

(3) The preparer shall be subject to a penalty of $500 for each endorsement or negotiation of a check prohibited under section 6695(f) and paragraph (f)(1) of this section.

(g) *Effective date.* This section applies to income tax returns and claims for refund presented to a taxpayer for signature after December 31, 1998, and for returns or claims for refund retained on or before that date.

[T.D. 7519, 42 FR 59969, Nov. 23, 1977, as amended by T.D. 7640, 44 FR 49452, Aug. 23, 1979; T.D. 8549, 59 FR 33432, June 29, 1994; T.D. 8689, 61 FR 65320, Dec. 12, 1996; T.D. 8803, 63 FR 72182, Dec. 31, 1998; T.D. 8893, 65 FR 44437, July 18, 2000]

§ 1.6695–2 Preparer due diligence requirements for determining earned income credit eligibility.

(a) *Penalty for failure to meet due diligence requirements.* A person who is an

income tax return preparer (preparer) of an income tax return or claim for refund under subtitle A of the Internal Revenue Code with respect to determining the eligibility for, or the amount of, the earned income credit (EIC) under section 32 and who fails to satisfy the due diligence requirements of paragraph (b) of this section will be subject to a penalty of $100 for each such failure. However, no penalty will be imposed under section 6695(g) on a person who is an income tax return preparer solely by reason of—

(1) Section 301.7701–15(a)(2) and (b) of this chapter, on account of having given advice on specific issues of law; or

(2) Section 301.7701–15(b)(3) of this chapter, on account of having prepared the return solely because of having prepared another return that affects amounts reported on the return.

(b) *Due diligence requirements.* A preparer must satisfy the following due diligence requirements:

(1) *Completion of eligibility checklist.* (i) The preparer must either—

(A) Complete Form 8867, ''Paid Preparer's Earned Income Credit Checklist,'' or such other form and such other information as may be prescribed by the Internal Revenue Service (IRS) (Eligibility Checklist); or

(B) Otherwise record in the preparer's paper or electronic files the information necessary to complete the Eligibility Checklist (Alternative Eligibility Record). The Alternative Eligibility Record may consist of one or more documents containing the required information.

(ii) The preparer's completion of the Eligibility Checklist or Alternative Eligibility Record must be based on information provided by the taxpayer to the preparer or otherwise reasonably obtained by the preparer.

(2) *Computation of credit.* (i) The preparer must either—

(A) Complete the Earned Income Credit Worksheet in the Form 1040 instructions or such other form and such other information as may be prescribed by the IRS (Computation Worksheet); or

(B) Otherwise record in the preparer's paper or electronic files the preparer's EIC computation, including the method and information used to make the computation (Alternative Computation Record). The Alternative Computation Record may consist of one or more documents containing the required information.

(ii) The preparer's completion of the Computation Worksheet or Alternative Computation Record must be based on information provided by the taxpayer to the preparer or otherwise reasonably obtained by the preparer.

(3) *Knowledge.* The preparer must not know, or have reason to know, that any information used by the preparer in determining the taxpayer's eligibility for, or the amount of, the EIC is incorrect. The preparer may not ignore the implications of information furnished to, or known by, the preparer, and must make reasonable inquiries if the information furnished to, or known by, the preparer appears to be incorrect, inconsistent, or incomplete.

(4) *Retention of records.* (i) The preparer must retain—

(A) A copy of the completed Eligibility Checklist or Alternative Eligibility Record;

(B) A copy of the Computation Worksheet or Alternative Computation Record; and

(C) A record of how and when the information used to complete the Eligibility Checklist or Alternative Eligibility Record and the Computation Worksheet or Alternative Computation Record was obtained by the preparer, including the identity of any person furnishing the information.

(ii) The items in paragraph (b)(4)(i) of this section must be retained for three years after the June 30th following the date the return or claim for refund was presented to the taxpayer for signature, and may be retained on paper or electronically in the manner prescribed in applicable regulations, revenue rulings, revenue procedures, or other appropriate guidance (see § 601.601(d)(2) of this chapter).

(c) *Exception to penalty.* The section 6695(g) penalty will not be applied with respect to a particular income tax return or claim for refund if the preparer can demonstrate to the satisfaction of the IRS that, considering all the facts and circumstances, the preparer's normal office procedures are reasonably

designed and routinely followed to ensure compliance with the due diligence requirements of paragraph (b) of this section, and the failure to meet the due diligence requirements of paragraph (b) of this section with respect to the particular return or claim for refund was isolated and inadvertent.

(d) *Effective date.* This section applies to income tax returns and claims for refund due on or after October 17, 2000.

[T.D. 8905, 65 FR 61269, Oct. 17, 2000]

§ 1.6696–1 Claims for credit or refund by income tax return preparers.

(a) *Notice and demand.* (1) The Internal Revenue Service shall issue to each income tax return preparer one or more statements of notice and demand for payment for all penalties assessed against the preparer under section 6694 and § 1.6694–1, or under section 6695 and § 1.6695–1.

(2) For the definition of the term ''income tax return preparer'' (or ''preparer''), see section 7701(a)(36) and § 301.7701–15. However, a person who prepares a claim for credit or refund under this section for another person is not, with respect to that preparation, an income tax return preparer as defined in section 7701(a)(36) and § 301.7701–15.

(b) *Claim filed by preparer.* A claim for credit or refund of a penalty (or penalties) assessed against a preparer under section 6694 and § 1.6694–1, or under section 6695 and § 1.6695–1, may be filed under this section only by the preparer (or the preparer's estate) against whom the penalty (or penalties) is assessed and not by for example, the preparer's employer. This paragraph is not intended, however, to impose any restrictions on the preparation of this claim for credit or refund. rified by a written declaration by the preparer that the information is provided under penalty of perjury.

(c) *Separation and consolidation of claims.* (1) Unless paragraph (c)(2) of this section applies, a preparer shall file a separate claim for each penalty asserted in each statement of notice and demand issued to the preparer.

(2) A preparer may file one or more consolidated claims for any or all penalties imposed on the preparer by a single Internal Revenue Service Center (or district director) under section 6695(a) and § 1.6695–1(a) (relating to failure to furnish copy of return to taxpayer), section 6695(b) and § 1.6695–1(b) (relating to failure to sign), section 6695(c) and § 1.6695–1(c) (relating to failure to furnish identifying number), or under section 6695(d) and § 1.6695(d) (relating to failure to retain copy of return or record), whether the penalties are asserted on a single or on separate statements of notice and demand. In addition, a preparer may file one consolidated claim for any or all penalties imposed on the preparer by a single Internal Revenue Service Center (or district director) under section 6695(e) and § 1.6695–1(e) (relating to failure to file correct information return), which are asserted on a single statement of notice and demand.

(d) *Content of claim.* Each claim for credit or refund or any penalty (or penalities) paid by a preparer under section 6694 and § 1.6694–1, or under section 6695 and § 1.6695–1, shall include the following information, verified by a written declaration by the preparer that the information is provided under penalty of perjury;

(1) The preparers's name.

(2) The preparer's identification number. If the preparer is:

(i) An individual (not described in subdivision (iii) of this paragraph (d)(2)) who is a citizen or resident of the United States, the preparer's social security account number shall be provided;

(ii) An individual who is not a citizen or resident of the United States and also was not employed (or engaged) by another preparer to prepare the document (or documents) with respect to which the penalty (or penalties) was assessed, the preparer's employer identification shall be provided; or

(iii) A person (whether an individual, corporation, or partnership) who employed (or engaged) one or more persons to prepare the document (or documents) with respect to which the penalty (or penalties) was assessed, the preparer's employer identification number shall be provided.

(3) The preparer's address where the Internal Revenue Service mailed the statement (or statements) of notice

and demand and, if different, the preparer's address shown on the document (or documents) with respect to which the penalty (or penalities) was assessed.

(4)(i) The address of the Internal Revenue Service Center (or district director) which issued to the preparer the statement (or statements) of noticve and demand for payment of the penalty (or penalties) included in the claim; and

(ii) The date (or dates) and identifying number (or numbers) of the statement (or statements) of notice and demand.

(5)(i) The identification, by amount, type, and document of which related, of each penalty included in the claim. Each document referred to in the preceding sentence shall be identified by the form title or number, by the taxpayer's (or nontaxable entity's) name and identification number, and by the taxable year to which the document relates;

(ii) The date (or dates) of payment of the amount (or amounts) of the penalty (or penalties) included in the claim; and

(iii) The total amount claimed.

(6) A statement setting forth in detail:

(i) Each ground upon which each penalty overpayment claim is based; and

(ii) Facts sufficient to apprise the Internal Revenue Servicve of the exact basis of each such claim.

(e) *Form for filing claim.* Notwithstanding § 301.640–2(c), Form 6118 is the form prescribed for making a claim as provided in this section.

(f) *Place for filing claim.* A claim filed under this section shall be filed with the Internal Revenue Service Center (or district director) which issued to the preparer the statement (or statements) of notice and demand for payment of the penalty (or penalities) included in the claim.

(g) *Time for filing claim.* (1) Except as provided in section 6694(c)(1) and § 1.6694–2, (a)(3)(ii) and (4), and in section 6694(d) and § 1.6694–1(c):

(i) A claim for a penalty paid by a preparer under section 6694 and § 1.6694–1, or under section 6695 and § 1.6695–1, shall be filed within 3 years from the date the payment was make; and

(ii) A consolidated claim, permitted under paragraph (c)(2) of this section, shall be filed within 3 years from the first date of payment of any penalty included in the claim.

For purposes of this paragraph (g)(1), payment is considered made on the date payment is received by the Internal Revenue Service or, where applicable, on the date an amount is credited in satisfaction of the penalty.

(2) The rules under sections 7502 and 7503 and the regulations thereunder apply to the timely filing of a claim as provided in this section.

(h) *Application of refund to outstanding liability of income tax return preparer.* The Internal Revenue Service may, within the applicable period of limitation, credit any amount of an overpayment by a preparer of a penalty (or penalities) paid under section 6694 and § 1.6694–1, or under section 6695 and § 1.6695–1, against any outstanding liability for any tax (or for any interest, additional amount, addition to the tax, or assessable penalty) owed by the preparer making the overpayment. If a portion of an overpayment is so credited, only the balance will be refunded to the preparer.

(i) *Interest.* (1) Section 6611 and the regulations thereunder apply to the payment by the Internal Revenue Service of interest on an overpayment by a preparer of a penalty (or penalties) paid under section 6694 and § 1.6694–1, or under section 6695 and § 1.6695–1.

(2) Section 6601 and the regulations thereunder apply to the payment of interest by a preparer to the Internal Revenue Service on any penalty (or penalties) assessed against the preparer under section 6694 and § 1.6694–1 or under section 6695 and § 1.6695–1.

(j) *Suits for refund of preparer penalty.* (1) A preparer may not maintain a civil action for the recovery of any penalty paid under section 6694 and § 1.6694–1 or under section 6695 and § 1.6695–1, unless the preparer has previously filed a claim for credit or refund of the penalty as provided in this section (and the court has jurisdiction of the proceeding). See sections 6694(c) and 7422.

(2)(i) Except as provided in section 6694(c)(2) and § 1.6694–2(b), the periods of limitation contained in section 6532 and the regulations thereunder apply

to a preparer's suit for the recovery of any penalty paid under section 6694 and § 1.6694–1, or under section 6695 and § 1.6695–1.

(ii) The rules under section 7503 and the regulations thereunder apply to the timely commencement by a preparer of a suit for the recovery of any penalty paid under section 6694 and § 1.6694–1, or under section 6695 and § 1.6695–1.

[T.D. 7621, 44 FR 27985, May 14, 1979]

§ 1.6709–1T Penalties with respect to mortgage credit certificates (temporary).

(a) *Material misstatement*—(1) *Negligence*. If any person makes a material misstatement in any affidavit or other statement under a penalty of perjury made with respect to the issuance of a mortgage credit certificate and such misstatement is due to the negligence of that person, that person shall pay a penalty of $1,000 for each mortgage credti certificate with respect to which that misstatement was made.

(2) *Fraud*. If a misstatement described in subparagraph (1) is due to fraud on the part of the person making the misstatement, that person shall pay a penalty of $10,000 for each mortgage credit certificate with respect to which the fraudulent misstatement was made. The penalty imposed by this paragraph (a)(2) is in addition to any criminal penalty.

(b) *Reports*. (1) Any person required by § 1.25–8T to file a report with respect to any mortgage credit certificate who fails to file the report at the time and in the manner required by § 1.25–8T shall pay a penalty of $200 for each mortgage credit certificate with respect to which that failure occurred. The preceding sentence shall not apply if it is shown that such failure is due to reasonable cause and not to willful neglect.

(2) In the case of any report required under § 1.25–8T(b), the aggregate amount of the penalty imposed by this paragraph shall not exceed $2,000.

[T.D. 8023, 50 FR 19355, May 8, 1985]

JEOPARDY, BANKRUPTCY, AND RECEIVERSHIPS

§ 1.6851–1 Termination assessments of income tax.

(a) *Authority for making*—(1) *In general*. This section applies to assessments authorized by a district director under section 6851(a) (hereinafter referred to as termination assessments). The district director shall immediately authorize a termination assessment of the income tax for the current or preceding taxable year if the district director finds that a taxpayer designs to do an act which would tend to prejudice proceedings to collect the income tax for such year or years unless such proceedings are brought without delay. In addition, the district director shall immediately authorize such a termination assessment if the district director determines that the taxpayer designs to do any act which would tend to render such proceedings wholly or patially ineffective unless brought without delay. A termination assessment will be made if collection is determined to be in jeopardy because at least one of the following conditions exists.

(i) The taxpayer is or appears to be designing quickly to depart from the United States or to conceal himself or herself.

(ii) The taxpayer is or appears to be designing quickly to place his, her, or its property beyond the reach of the Government either by removing it from the United States, by concealing it, by dissipating it, or by transferring it to other persons.

(iii) The taxpayer's financial solvency is or appears to be imperiled.

Paragraph (a)(1)(iii) of this section does not include cases where the taxpayer becomes insolvent by virtue of the accrual of the proposed assessment of tax, and penalty, if any. A tax assessed under this section shall become immediately due and payable and the district director shall serve upon such taxpayer notice and demand for immediate payment of such tax.

(2) *Computation of tax*. If a termination assessment of the income tax

for the current year is made, the income tax for such year shall be computed for the period beginning on the first day of such year and ending on the day of the assessment. A credit shall be allowed for any tax for the taxable year previously assessed under section 6851. The taxpayer is entitled to a deduction for the personal exemptions (as limited in the case of certain non-resident aliens) without any proration for or because of the short taxable period.

(3) *Taxable year not affected by termination*. Notwithstanding any termination assessment a taxpayer shall file a return in accordance with section 6012 and the regulations thereunder for the taxpayer's full taxable year. The term ''full taxable year'' means the taxpayer's usual annual accounting period determined without regard to any action under section 6851 and this section. The return shall show all items of gross income, deductions, and credits for such taxable year. Any tax collected as a result of a termination assessment will be applied against the tax due for the taxpayer's full taxable year. Except as provided in § 1.6851–2 (relating to departing aliens), no return is required to be filed for a terminated period other than a full taxable year.

(4) *Evidence of compliance with income tax obligations*. Citizens of the United States or of possessions of the United States departing from the United States or its possessions will not be required to procure certificates of compliance or to present any other evidence of compliance with income tax obligations. However, for the rules relating to the furnishing of evidence of compliance with the income tax obligations by certain departing aliens, see § 1.6851–2.

(5) *Section 6851 inapplicable where section 6861 applies*. No termination assessment for the preceding taxable year shall be made after the due date of the taxpayer's return for such year (determined with regard to extensions of time to file such return).

(b) *Notice of deficiency*. Where notice and demand for payment (following a termination assessment) takes place after February 28, 1977, the district director shall, within 60 days after the later of:

(1) The date the taxpayer files a return for the full taxable year; or

(2) The due date of such return (determined with regard to extensions); send the taxpayer a notice of deficiency under section 6212(a). The amount of the deficiency shall be computed in accordance with section 6211 and the regulations thereunder. In applying section 6211, the tax imposed and the amount shown upon the return shall be determined on the basis of the taxpayer's full taxable year. Thus, for example assume that on November 1, 1979, a termination assessment against A, a calendar year taxpayer, is made in the amount of $18,000. The termination assessment is for the period from January 1, 1979 through November 1, 1979. Further assume that on or before April 15, 1980, A files a form 1040 showing an income tax liability for the full year 1979 of $10,000. If the district director determines A's liability for tax for 1979 is $16,000, a notice of deficiency for $6,000 shall be sent to A on or before June 14, 1980. Assuming that the district director had collected the $18,000 assessed, $2,000 shall be refunded.

(c) *Immediate payment*. The district director shall make demand for immediate payment of the amount of the termination assessment, and the taxpayer shall immediately pay such amount or shall immediately file the bond provided in section 6863.

(d) *Abatement*. The provisions of §§ 301.6861–1(e) and 301.6861–1(f) relating to the abatement of jeopardy assessments, shall apply to assessments made under section 6851.

[T.D. 7575, 43 FR 58816, Dec. 18, 1978]

§ 1.6851–2 Certificates of compliance with income tax laws by departing aliens.

(a) *In general*—(1) *Requirement*. The rules of this section are applicable, except as otherwise expressly provided, to any alien who departs from the United States or any of its possessions after January 20, 1961. Except as provided in subparagraph (2) of this paragraph, no such alien, whether resident or nonresident, may depart from the United States unless he first procures a certificate that he has complied with

all of the obligations imposed upon him by the income tax laws. In order to procure such a certificate, an alien who intends to depart from the United States (i) must file with the district director for the internal revenue district in which he is located the statements or returns required by paragraph (b) of this section to be filed before obtaining such certificate, (ii) must appear before such district director if the district director deems it necessary, and (iii) must pay any taxes required under paragraph (b) of this section to be paid before obtaining the certificate. Either such certificate of compliance, properly executed, or evidence that the alien is excepted under subparagraph (2) of this paragraph from obtaining the certificate must be presented at the point of departure. An alien who presents himself at the point of departure without a certificate of compliance, or evidence establishing that such a certificate is not required, will be subject at such departure point to examination by an internal revenue officer or employee and to the completion of returns and statements and payment of taxes as required by paragraph (b) of this section.

(2) *Exceptions*—(i) *Employees of foreign governments or international organizations—(a) Diplomatic representatives, their families and servants.* (1) Representatives of foreign governments bearing diplomatic passports, whether accredited to the United States or other countries, and members of their households shall not, upon departure from the United States or any of its possessions, be examined as to their liability for United States income tax or be required to obtain a certificate of compliance. If a foreign government does not issue diplomatic passports but merely indicates on passports issued to members of its diplomatic service the status of the bearer as a member of such service, such passports are considered as diplomatic passports for income tax purposes.

(2) Likewise, the servant of a diplomatic representative who accompanies any individual bearing a diplomatic passport upon departure from the United States or any of its possessions shall not be required, upon such departure, to obtain a certificate of compliance or to submit to examination as to his liability for United States income tax. If the departure of such a servant from the United States or any of its possessions is not made in the company of an individual bearing a diplomatic passport, the servant is required to obtain a certificate of compliance. However, such certificate will be issued to him on Form 2063 without examination as to his income tax liability upon presentation to the district director for the internal revenue district in which the servant is located of a letter from the chief of the diplomatic mission to which the servant is attached certifying *(i)* that the name of the servant appears on the ''White List'', a list of employees of diplomatic missions, and *(ii)* that the servant is not obligated to the United States for any income tax, and will not be so obligated up to and including the intended date of departure.

(b) Other employees. Any employee of an international organization or of a foreign government (other than a diplomatic representative to whom *(a)* of this subdivision applies) whose compensation for official services rendered to such organization or government is excluded from gross income under section 893 and who has received no gross income from sources within the United States, and any member of his household who has received no gross income from sources within the United States, shall not, upon departure from the United States or any of its possessions after November 30, 1962, be examined as to his liability for United States income tax or be required to obtain a certificate of compliance.

(c) Effect of waiver. An alien who has filed with the Attorney General the waiver provided for under section 247(b) of the Immigration and Nationality Act (8 U.S.C. 1257(b)) is not entitled to the exception provided by this subdivision.

(ii) *Alien students, industrial trainees, and exchange visitors.* A certificate of compliance shall not be required, and examination as to United States income tax liability shall not be made, upon the departure from the United States or any of its possessions of—

(A) An alien student, industrial trainee, or exchange visitor, and any

spouse and children of that alien, admitted solely on an F–1, F–2, H–3, H–4, J–1 or J–2 visa, who has received no gross income from sources inside the United States other than—

(*1*) Allowances to cover expenses incident to study or training in the United States (including expenses for travel, maintenance, and tuition);

(*2*) The value of any services or accommodations furnished incident to such study or training;

(*3*) Income derived in accordance with the employment authorizations in 8 CFR 274a.12(b) and (c) that apply to the alien's visa; or

(*4*) Interest on deposits described in section 871(i)(2)(A); or

(B) An alien student, and any spouse or children of that alien admitted solely on an M–1 or M–2 visa, who has received no gross income from sources inside the United States other than income derived in accordance with the employment authorization in 8 CFR 274a.12(c)(6) or interest on deposits described in section 871(i)(2)(A).

(iii) *Other aliens temporarily in the United States.* A certificate of compliance shall not be required, and examination as to United States income tax liability shall not be made, upon the departure from the United States or any of its possessions of an alien hereinafter described in this subdivision, unless the district director has reason to believe that such alien has received taxable income during the taxable year up to and including the date of departure or during the preceding taxable year and that collection of income tax from such alien will be jeopardized by his departure from the United States:

(a) An alien visitor for pleasure admitted solely on a B–2 visa;

(b) An alien visitor for business admitted on a B–1 visa, or on both a B–1 visa and a B–2 visa, who does not remain in the United States or a possession thereof for a period or periods exceeding a total of 90 days during the taxable year;

(c) An alien in transit through the United States or any of its possessions on a C–1 visa or under a contract, including a bond agreement, between a transportation line and the Attorney General pursuant to section 238(d) of the Immigration and Nationality Act (8 U.S.C. 1228(d));

(d) An alien who is admitted to the United States on a border-crossing identification card or with respect to whom passports, visas, and border-crossing identification cards are not required, if such alien is a visitor for pleasure, or if such alien is a visitor for business who does not remain in the United States or a possession thereof for a period or periods exceeding a total of 90 days during the taxable year, or if such alien is in transit through the United States or any of its possessions;

(e) An alien military trainee admitted to the United States to pursue a course of instruction under the auspices of the Department of Defense who departs from the United States on official military travel orders; or

(f) An alien resident of Canada or Mexico who commutes between such country and the United States at frequent intervals for the purpose of employment and whose wages are subject to the withholding of tax.

(b) *Issuance of certificate of compliance*—(1) *In general.* (i) Upon the departure of an alien required to secure a certificate of compliance under paragraph (a) of this section, the district director shall determine whether the departure of such alien jeopardizes the collection of any income tax for the current or the preceding taxable year, but the district director may determine that jeopardy does not exist in some cases. If the district director finds that the departure of such an alien results in jeopardy, the taxable period of the alien will be terminated, and the alien will be required to file returns and make payment of tax in accordance with subparagraph (3)(iii) of this paragraph. On the other hand, if the district director finds that the departure of the alien does not result in jeopardy, the alien will be required to file the statement or returns required by subparagraph (2) or (3)(ii) of this paragraph, but will not be required to pay income tax before the usual time for payment.

(ii) The departure of an alien who is a resident of the United States or a possession thereof (or treated as a resident under section 6013 (g) or (h)) and

who intends to continue such residence (or treatment as a resident) shall be treated as not resulting in jeopardy, and thus not requiring termination of his taxable period, except when the district director has information indicating that the alien intends by such departure to avoid the payment of his income tax. In the case of a nonresident alien (including a resident alien discontinuing residence), the fact that the alien intends to depart from the United States will justify termination of his taxable period unless the alien establishes to the satisfaction of the district director that he intends to return to the United States and that his departure will not jeopardize collection of the tax. The determination of whether the departure of the alien results in jeopardy will be made on examination of all the facts in the case. Evidence tending to establish that jeopardy does not result from the departure of the alien may be provided, for example, by information showing that the alien is engaged in trade or business in the United States or that he leaves sufficient property in the United States to secure payment of his income tax for the taxable year and of any income tax for the preceding year which remains unpaid.

(2) *Alien having no taxable income and resident alien whose taxable period is not terminated.* A statement on Form 2063 shall be filed with the district director by every alien required to obtain a certificate of compliance:

(i) Who is a resident of the United States and whose taxable period is not terminated either because he has had no taxable income for the taxable year up to and including the date of his departure (and for the preceding taxable year where the period for making the income tax return for such year has not expired) or because, although he has had taxable income for such period or periods, the district director has not found that this departure jeopardizes collection of the tax on such income; or

(ii) Who is not a resident of the United States and who has had no taxable income for the taxable year up to and including the date of his departure (and for the preceding taxable year where the period for making the income tax return for such year has not expired).

Any alien described in subdivision (i) or (ii) of this subparagraph who is in default in making return of, or paying, income tax for any taxable year shall, in addition, file with the district director any returns which have not been made as required and pay to the district director the amount of any tax for which he is in default. Upon compliance by an alien with the foregoing requirements of this subparagraph, the district director shall execute and issue to the alien the certificate of compliance attached to Form 2063. The certificate of compliance so issued shall be effective for all departures of the alien during his current taxable year, subject to revocation upon any subsequent departure should the district director have reason to believe that such subsequent departure would result in jeopardy. The statement required of a resident alien under this subparagraph, if made before January 21, 1961, with respect to a departure after January 20, 1961, may be made on a Form 1040C in lieu of a Form 2063.

(3) *Nonresident alien having taxable income and resident alien whose taxable period is terminated*—(i) *Nonresident alien having taxable income.* Every nonresident alien required to obtain a certificate of compliance (but not described in subparagraph (2) of this paragraph) who wishes to establish that his departure does not result in jeopardy shall furnish to the district director such information as may be required for the purpose of determining whether the departure of the alien jeopardizes collection of the income tax and thus requires termination of his taxable period.

(ii) *Nonresident alien whose taxable period is not terminated.* Every nonresident alien described in subdivision (i) of this subparagraph whose taxable period is not terminated upon departure shall file with the district director:

(a) A return in duplicate on Form 1040C for the taxable year of his intended departure, showing income received, and reasonably expected to be received, during the entire taxable year within which the departure occurs; and

(b) Any income tax returns which have not been filed as required.

Upon compliance by the alien with the foregoing requirements of this subdivision, and the payment of any income tax for which he is in default, the district director shall execute and issue to the alien the certificate of compliance on the duplicate copy of Form 1040C. The certificate of compliance so issued shall be effective for all departures of the alien during his current taxable year, subject to revocation by the district director upon any subsequent departure if the taxable period of the alien is terminated on such subsequent departure.

(iii) *Alien (whether resident or nonresident) whose taxable period is terminated.* Every alien required to obtain a certificate of compliance, whether resident or nonresident, whose taxable period is terminated upon departure shall file with the district director:

(a) A return in duplicate on Form 1040C for the short taxable period resulting from such termination, showing income received, and reasonably expected to be received, during the taxable year up to and including the date of departure;

(b) Where the period for filing has not expired, the return required under section 6012 and § 1.6012–1 for the preceding taxable year; and

(c) Any other income tax returns which have not been filed as required.

Upon compliance with the foregoing requirements of this subdivision, and payment of the income tax required to be shown on the returns filed pursuant to *(a)* and *(b)* of this subdivision and of any income tax due and owing for prior years, the departing alien will be issued the certificate of compliance on the duplicate copy of Form 1040C. The certificate of compliance so issued shall be effective only for the specific departure with respect to which it is issued. A departing alien may postpone payment of the tax required to be shown on the returns filed in accordance with *(a)* and *(b)* of this subdivision until the usual time of payment by furnishing a bond as provided in § 301.6863–1.

(4) *Joint return on Form 1040C.* A departing alien may not file a joint return on Form 1040C unless:

(i) Such alien and his spouse may reasonably be expected to be eligible to file a joint return at the normal close of their taxable periods for which the return is made; and

(ii) If the taxable period of such alien is terminated, the taxable periods of both spouses are so terminated as to end at the same time.

(5) *Annual return.* Notwithstanding that Form 1040C has been filed for either the entire taxable year of departure or for a terminated period, the return required under section 6012 and § 1.6012–1 for such taxable year shall be filed. Any income tax paid on income shown on the return on Form 1040C shall be applied against the tax determined to be due on the income required to be shown on the subsequent return under section 6012 and § 1.6012–1.

[T.D. 6537, 26 FR 547, Jan. 20, 1961, as amended by T.D. 6620, 27 FR 11803, Nov. 30, 1962; T.D. 7575, 43 FR 58817, Dec. 18, 1978; T.D. 7670, 45 FR 6931, Jan. 31, 1980; T.D. 8332, 56 FR 3034, Jan. 28, 1991; T.D. 8526, 59 FR 10067, Mar. 3, 1994]

§ 1.6851–3 Furnishing of bond to insure payment; cross reference.

See section 6863 and § 301.6863–1 of this chapter (regulations on procedure and administration) for rules relating to the furnishing of bond to stay collection.

[T.D. 7575, 43 FR 58817, Dec. 18, 1978]

THE TAX COURT

DECLARATORY JUDGMENTS RELATING TO QUALIFICATION OF CERTAIN RETIREMENT PLANS

§ 1.7476–1 Interested parties.

(a) *In general*—(1) *Notice requirement.* Before the Internal Revenue Service can issue an advance determination as to the qualified status of certain retirement plans, the applicant must provide the Internal Revenue Service with satisfactory evidence that such applicant has notified the persons who qualify as interested parties, under regulations prescribed under section 7476(b)(1) of the Code, of the application for such determination. See section 3001(a) of the Employee Retirement Income Security Act of 1974 (88 Stat. 995). For the rules for giving notice to interested

parties, see § 1.7476–2 and paragraph (o) of § 601.201 of this chapter (Statement of Procedural Rules).

(2) *Declaratory judgments*. Section 7476 provides a procedure for obtaining a declaratory judgment by the Tax Court with respect to the initial or continuing qualification under subchapter D of chapter 1 of the Code of a retirement plan defined in section 7476(d), in the case of an actual controversy involving:

(i) A determination by the Internal Revenue Service with respect to the initial qualification or continuing qualification under such subchapter of such a plan, or

(ii) A failure by the Internal Revenue Service to make a determination with respect to:

(A) Such initial qualification of such a plan, or

(B) Such continuing qualification of such a plan, if the controversy arises from a plan amendment or plan termination.

Under section 7476(d) the term ''retirement plan'' means a pension profitsharing, or stock bonus plan described in section 401(a), or a trust which is part of such a plan, an annuity plan described in section 403(a), or a bond purchase plan described in section 405(a). This procedure is available only to the employer, the plan administrator as defined in section 414(g), an employee who qualifies as an interested party as defined in this section, or the Pension Benefit Guaranty Corporation, where such person has an actual controversy involving a determination described in paragraph (a)(2)(ii) of this section. In the case of an application for such a determination, this procedure is available only if such determination or failure to make such determination is with respect to an application described in paragraph (b)(7) of this section. In addition, in the case of such an application, if a petitioner was the applicant for the determination, the Tax Court may hold, under section 7476(b)(2), the filing of a pleading for a declaratory judgment to be premature unless the petitioner establishes to the satisfaction of the Tax Court that such petitioner has caused the interested parties to be notified in accordance with this section and § 1.7476.2

(b) *Interested parties*—(1) *In general*. If paragraphs (b) (2), (3), (4), and (5) of this section do not apply, then, except as otherwise provided in paragraphs (b)(6) (i), (ii), and (iii) of this section, the following persons shall be interested parties with respect to an application for an advance determination as to the qualified status of a retirement plan:

(i) All present employees of the employer who are eligible to participate in the plan (as defined in paragraph (d)(2) of this section), and

(ii) All other present employees of the employer whose principal place of employment (as defined in paragraph (d)(3) of this section) is the same as the principal place of employment of any employee described in paragraph (b)(1)(i) of this section.

(2) *Certain plans covering a principal owner*. Notwithstanding paragraph (b)(1) of this section, where:

(i) A principal owner (within the meaning of paragraph (d)(2) of § 1.414(c)–3) of the employer or of a common parent of the employer (where the employer is a member of a parent-subsidiary group of trades or businesses under common control under section 414 (b) or (c)) is eligible to participate in the plan, and

(ii) The number of employees employed by such employer (including all employees who by reason of section 414 (b) or (c) are treated as employees of such employer) is 100 or less then except as otherwise provided in paragraphs (b)(6) (i), (ii), and (iv) of this section, all present employees of the employer shall be interested parties with respect to an application for an advance determinations as to the qualified status of the retirement plan.

(3) *Certain plan amendments*. In the case of an application for an advance determination as to whether a plan amendment affects the continuing qualification of a plan, if:

(i) There is outstanding a favorable determination letter for a plan year to which section 410 applies, and

(ii) The amendment does not alter the participation provisions of the plan, then paragraphs (b) (1) and (2) of this section shall not apply, and all

present employees of the employer who are eligible to participate in the plan (as defined in paragraph (d)(2) of this section), shall be interested parties. For the purpose of this paragraph (b)(3), if qualification of the plan is dependent upon benefits under the plan integrating with those benefits provided under the Social Security Act or a similar program, and if such integration results in excluding any employee or could possibly result in any participant's benefit being reduced to zero and the amendment alters contributions to or the amount of benefits payable under the plan, then the amendment shall be considered to alter the participation provisions of the plan.

(4) *Collectively bargained plans.* In the case of an application with respect to a plan described in section 413(a) (relating to collectively bargained plans), paragraphs (b) (1), (2) and (3) of this section shall not apply and all present employees covered by a collective-bargaining agreement pursuant to which the plan is maintained shall be interested parties.

(5) *Plan terminations.* In the case of an application for an advance determination with respect to whether a plan termination affects the continuing qualification of a retirement plan, paragraphs (b) (1), (2), (3) and (4) of this section shall not apply, and all present employees with accrued benefits under the plan, all former employees with vested benefits under the plan, and all beneficiaries of decreased former employees currently receiving benefits under the plan, shall be interested parties.

(6) *Exceptions.* (i) In the case of an application to which paragraph (b) (1) or (2) of this section applies, an employee who is not eligible to participate in the plan shall not be an interested party if such employee is excluded from consideration for purposes of section 410(b)(1) by reason of section 410(b)(2) (B) or (C).

(ii) In the case of an application to which paragraph (b) (1) or (2) of this section applies, an application to which paragraph (b) (1) or (2) of this section applies, an employee who is not eligible to participate in the plan shall not be an interested party if such plan meets the eligibility standards of section 410(b)(1)(A).

(iii) In the case of an application to which paragraph (b)(1) of this section applies, an employee who is not eligible to participate in the plan shall not be an interested party with respect to such plan if such employee is eligible to participate in any other plan of the employer with respect to which a favorable determination letter is outstanding (whether or not issued pursuant to an application to which this section applies), or in such a plan of another employer whose employees, by reason of section 414 (b) or (c), are treated as employees of the employer making the application.

(iv) In the case of an application to which paragraph (b)(2) of this section applies, an employee who is not eligible to participate in the plan shall not be an interested party with respect to such plan if such employee is eligible to participate in a plan described in section 413(a) (relating to collectively bargained plans) maintained by the employer with respect to which a favorable determination letter is outstanding (whether or not issued purusant to an application to which this section applies), or in such a plan of another employer whose employees by reason of section 414 (b) or (c), are treated as employees of the employer making the application.

(7) *Applicability.* Paragraph (b) of this section shall only apply in the case of an application made to the internal Revenue Service requesting an advance determination that a retirement plan as defined in section 7476(d) and paragraph (a) of this section meets the requirements for qualification for a plan year or years to which section 410 applies to such plan. See paragraphs (c) (4) and (5) of this section for special rules in respect of years to which section 410 applies.

(c) *Special rules.* For purposes of paragraph (b) of this section and § 1.7476–2:

(1) *Time of determination.* The status of an individual as an interested party and as a present employee or former employee shall be determined as of a date determined by the applicant, which date shall not be earlier than five business days before the first date on which the notice of the application is given to interested parties pursuant

to § 1.7476–2 nor later than the date on which such notice is given.

(2) *Controlled groups, etc.* An individual shall be considered to be an employee of an employer if such employee is treated as that employer's employee under section 414 (b) or (c).

(3) *Self-employed individuals.* A self-employed individual shall be considered an employee.

(4) *Years to which section 410 relates.* For purposes of paragraph (b)(7) of this section, section 410 shall be considered to apply to a plan year if an election has been made under section 1017(d) of the Employee Retirement Income Security Act of 1974 to have section 410 apply to such plan year, whether or not the election is conditioned upon the issuance by the Commissioner of a favorable determination letter.

(5) *Government, church plans, etc.* In the case of an organization described in section 410(c)(1), section 410 will be considered to apply to a plan year of such organization for any plan year to which section 410(c)(2) applies to such plan.

(d) *Definitions.* For the purposes of paragraph (b) of this section and § 1.7476–2:

(1) *Employer.* The term ''employer'' includes all employers who maintain the plan with respect to which an advance determination applies. A sole proprietor shall be considered such person's own employer and a partnership is considered to be the employer of each of the partners.

(2) *Eligible to participate.* For purposes of this section, an employee is eligible to participate in a plan if such employee:

(i) Is a participant in the plan,

(ii) Would be a participant in the plan if such employee met the minimum age and service requirements of the plan or

(iii) Would be a participant in the plan upon making mandatory employee contributions.

In applying this paragraph (d)(2), plan provisions (with respect to which the determination regarding qualification is to be based) not in effect on the first date on which notice is given to interested parties shall be treated as though they were in effect on such date.

(3) *Place of employment.* A place of employment includes all worksites within a plant, installation, store, office, or similar facility. Any employee who has no principal place of employment shall be treated as though such employee's principal place of employment is that place to which such employee regularly reports to the employer.

[T.D. 7421, 41 FR 20876, May 21, 1976; 41 FR 22561, June 4, 1976, as amended by T.D. 8179, 53 FR 6613, Mar. 2, 1988]

§ 1.7476–2 Notice to interested parties.

(a) *In general.* Any person applying to a district director for a determination described in paragraph (b)(7) of § 1.7476–1 shall cause notice of the application to be given to persons who qualify as interested parties under § 1.7476–1 with respect to the application, whether or not such application is received by the Internal Revenue Service before the date on which section 410 applies to the plan.

(b) *Nature of notice.* The notice required by this section shall be given in writing, shall contain the information and be given within the time prescribed in paragraph (o)(3) of § 601.201 of this chapter (Statement of Procedural Rules), and shall be given in the manner prescribed in paragraph (c) of this section.

(c) *Method of giving notice*—(1) *Present employee.* In the case of a present employee who is an interested party, notice shall be given in person, by mailing, by posting, or by printing it in a publication of the employer or an employee organization which is distributed in such a manner so as to be reasonably available to such employee. Notice given by posting shall be made by posting such notice (i) at those locations within the principal places of employment of the interested parties which are customarily used for employer notices to employees with regard to labor-management relations matters, or (ii) if the plan is maintained pursuant to one or more collective-bargaining agreements, at those locations described in (i) or at those locations customarily used by the employee representatives for posting notices with regard to labor-management relations maters (such as local union meeting places) in the geographical

area or areas within which the interested parties are employed. Regardless of which method is used to notify an employee, if an interested party who is a present employee is in a unit of employees covered by a collective-bargaining agreement between employee representatives and one or more employers, notice shall also be given in person or by mail to the collective-bargaining representative of such interested party.

(2) *Former employee or beneficiary*. (i) Except as otherwise provided in paragraph (c)(2)(ii) of this section, in the case of a former employee or beneficiary who is an interested party, notice shall be given in person or by mail to the last known address of such former employee or beneficiary.

(ii) In cases in which compliance with the methods for notication prescribed in paragraph (c)(2)(i) of this section will present unusual financial or administrative burdens or, by reason of the peculiar circumstances of the case, cannot reasonably be expected to result in adequate and timely notice, applicants for advance determination letters may cause notice to be given to former employees or beneficiaries by methods other than those described in such paragraph (c)(2)(i) provided such methods are reasonably calculated to provide timely notice to such employees or beneficiaries who are interested parties, or to established representatives of such interested parties who may be reasonably expected to act in their interest and on their behalf. In such a case, the application for determination shall be accompanied by a full description of the method of notification used, as well as the particular financial or administrative burdens that would have occurred if notice had been given pursuant to the methods prescribed in paragraph (c)(2)(i) of this section, or the reasons why such prescribed methods would not have resulted in adequate or timely notice.

(d) *Effective date*. (1) The provisions of § 1.7476–1 and this section shall apply to applications referred to in paragraph (b) of § 1.7476–1 made on or after June 21, 1976. Sections 11.7476–1, and 11.7476–2 of this chapter (Temporary Income Tax Regulations under the Employee Retirement Income Security Act of 1974) as promulgated by Treasury Decision 7358 (May 30, 1975) shall apply to applications made before such date. However, an applicant may elect to have the provisions of § 1.7476–1 and this section apply with respect to an application made after May 20, 1976 and before June 21, 1976. Such election may be made by attaching to the application as originally submitted, a statement that the applicant has elected to have the provisions of § 1.7476–1 and this section apply.

(2) Notwithstanding paragraph (d)(1) of this section, if:

(i) The plan or plan amendment which is the subject of an application for advance determination, is adopted on or before May 30, 1976, and,

(ii) Such application for advance determination is made before September 2, 1976, the applicant may elect to have the provisions of §§ 11.7476–1 and 11.7476–2 of this chapter (Temporary Income Tax Regulations under the Employee Retirement Income Security Act of 1974) apply with respect to such application made on or after June 21, 1976 and before September 2, 1976. Such an election may be made by attaching to the application as originally submitted, a statement that the applicant has elected to have the provisions of §§ 11.7476–1 and 11.7476–2 of this chapter (Temporary Income Tax Regulations under the Employee Retirement Income Security Act of 1974) apply.

[T.D. 7421, 41 FR 20876, May 21, 1976]

§ 1.7476–3 Notice of determination.

(a) *In general*. Under section 7476(b)(5) if a district director sends to the employer, the plan administrator, an interested party with respect to the plan, or the Pension Benefit Guaranty Corporation (or in the case of certain individuals who qualify as interested parties under paragraph (b) of § 1.7476–1, to the person described under paragraph (c) of this section as the representative of such individuals) by certified or registered mail a notice of determination with respect to the qualification of a retirement plan described in section 7476(d), no proceeding for a declaratory judgment by the United States Tax Court with respect to the qualification of such plan may be initiated by such person unless the pleading initiating

such proceeding is filed by such person with such Court before the ninety-first day after the day after such notice is mailed.

(b) *Address for notice of determination*—(1) *Applicant*. In the case of the applicant for a determination, a notice of determination referred to in section 7476(b)(5) shall be sufficient if mailed to such person at the address set forth on the application for the determination.

(2) *Interested party*. In the case of an interested party or parties who, pursuant to section 3001(b) of the Employee Retirement Income Security Act of 1974 (88 Stat. 995), submitted a comment to a district director with respect to the qualification of the plan, a notice of determination referred to in section 7476(b)(5) shall be sufficient if mailed to the address designated in the comment as the address to which correspondence should be sent.

(c) *Representative of interested parties*. (1) In the case of an interested party who, in accordance with section 3001(b) of the Employee Retirement Income Security Act of 1974 (88 Stat. 995), requests the Secretary of Labor to submit a comment to a district director on matters respecting the qualification of the plan, where pursuant to such request such Secretary does in fact submit such a comment, the Administrator of Pension and Welfare Benefit Programs, Department of Labor, shall be the representative of such interested party for purposes of receiving the notice referred to in section 7476(b)(5) with respect to those matters on which the Secretary of Labor commented.

(2) In the event a single comment with respect to the qualification of the plan is submitted to a district director by two or more interested parties, the representative designated in the comment for receipt of correspondence shall be the representative of all the interested parties submitting the comment for purposes of receiving the notice referred to in section 7476(b)(5) on behalf of all of them. Such designated representative must be either one of the interested parties who submitted the comment or a person described in paragraph (e)(6) (i), (ii) or (iii) of § 601.201 of this chapter (Statement of Procedural Rules). If one person is not designated in the comment as the representative for receipt of correspondence, a notice of determination mailed to any interested party who submitted the comment shall be notice to all the interested parties who submitted the comment for purposes of section 7476(b)(5).

[T.D. 7421, 41 FR 20877, May 21, 1976]

§ 1.7519–0T Table of contents (temporary).

This section lists the captions that appear in the temporary regulations under section 7519.

§ 1.7519–1T Required payments for entities electing not to have required year (temporary).

(a) In general.
(1) Applicability.
(2) Returns and required payments.
(3) Required payment.
(4) Examples.
(b) Definitions and special rules.
(1) Applicable percentage.
(i) In general.
(ii) Exception for certain applicable election years beginning after 1987.
(iii) Example.
(2) Adjusted highest section 1 rate.
(i) General rule.
(ii) Period for determining highest section rate.
Base year.
(4) Special rules for certain applicable election years.
(i) First applicable election year of new entities.
(ii) Applicable election years ending prior to the required taxable year.
(5) Net base year income.
(i) In general.
(ii) Partnership net income.
(A) In general.
(B) Treatment of deductions and losses.
(C) Partner limitations disregarded.
(iii) S corporation net income.
(A) In general.
(B) Treatment of deductions and losses.
(C) Shareholder limitations disregarded.
(iv) Applicable payments.
(A) In general.
(B) Exceptions.
(C) Special rule for corporation electing S status.
(D) Special rules for certain payments.
(*1*) Certain indirect payments.
(*2*) Payments by a downstream controlled partnership.
(*i*) In general.
(*ii*) Definition of a downstream controlled partnership.
(*3*) Examples.

(v) Special rule for base year of less than twelve months.
(A) In general.
(B) Annualized short base year income.
(vi) Examples.
(c) Regunds of required payments.
(d) Examples.

§ 1.7519–2T Required payments—procedures and administration (temporary).

(a) Payment and return required.
(1) In general.
(2) Return required.
(i) In general.
(ii) Procedure if amount for applicable election year (and all preceding years) is not greater than $500.
(3) Time and place for filing return.
(i) Applicable election years beginning in 1987.
(A) Taxpayers that would otherwise file Form 720 for the second quarter of 1988.
(B) Other taxpayers.
(ii) Applicable election years beginning after 1987.
(A) Return made on Form 720.
(B) Return made on form other than Form 720.
(iii) Special rule for back-up section 444 election.
(4) Time and place for making required payment.
(i) Applicable election years beginning in 1987.
(ii) Applicable election years beginning after 1987.
(iii) Special rule for back-up section 444 election.
(5) Penalties for failure to pay.
(6) Refund of required payment.
(i) In general.
(ii) Procedures for claiming refund.
(iii) Interest on refund.
(b) Assessment and collection of payment.
(c) Termination due to willful failure.
(d) Negligence and fraud penalties made applicable.

§ 1.7519.3T Effective date (temporary).

§ 1.7519–1T Required payments for entities electing not to have required year (temporary).

(a) *In general*—(1) *Applicability*. This section applies to any taxable year that a partnership or S corporation has an election under section 444 in effect (an ''applicable election year'').

(2) *Returns and required payments*. For each applicable election year, a partnership or S corporation must—

(i) File a return as provided in § 1.7519—2T (a)(2), and

(ii) Make a required payment (as defined in paragraph (a)(3) of this section) as provided in § 1.7519–2T.

However, if the required payment for an applicable election year is not more than $500 and the partnership or S corporation has not been required to make a required payment for a prior year, the partnership or S corporation should not make a required payment for such applicable election year.

(3) *Required payment*. The term ''required payment'' means, with respect to any applicable election year, an amount equal to the excess of—

(i) The product of the applicable percentage of the adjusted highest section 1 rate, multiplied by the net base year income (as defined in paragraph (b) (5) of this section) of the entity over

(ii) The cumulative amount of required payments actually made for all preceding applicable election years (reduced by the cumulative amount of such payments refundable under section 7519(c) for all such preceding years).

Furthermore, the amount of the required payment is determined without regard to the required payment of any other partnership or S corporation. See example (3) in paragraph (d) of this section.

(4) *Examples*. The provisions of paragraph (a) of this section may be illustrated by the following examples.

Example (1). A, a partnership, makes a section 444 election to retain its taxable year ending September 30. For A's first applicable election year, A's required payment, as defined in paragraph (a) (3) of this section, is $400. Thus, A does not have to make a required payment for that year. However, A is required to file the return prescribed by § 1.7519–2T(a)(2).

Example (2). The facts are the same as in example (1), and, in addition to those facts, for A's second applicable election year, the amount determined under paragraph (a)(3)(i) of this section is $800. Because A did not actually make a required payment for A's first applicable election year, A's required payment is $800 for its second applicable election year. Since the required payment is greater than $500, A must make a required payment for its second applicable election year. Furthermore, A must file the return prescribed by § 1.7519–2T(a)(2).

Example (3). The facts are the same as in example (2), and, in addition to those facts, for A's third applicable election year, the

amount determined under paragraph (a)(3)(i) of this section is $1,200. Thus, A's required payment is $400 ($1,200 determined under paragraph (a)(3)(i) of this section less $800 determined under paragraph (a)(3)(ii) of this section). Although A's required payment for its third applicable election year is not more than $500, A must make its required payment for such year because the required payment for a preceding applicable election year exceeded $500. A must also file the return prescribed by § 1.7519–2T(a)(2) for its third applicable election year.

(b) *Definitions and special rules*—(1) *Applicable percentage*—(i) *In general*. Except as provided in paragraph (b)(1)(ii) of this section, the term ''applicable percentage'' means the percentage determined in accordance with the following table:

If the applicable election year of the partnership or S corporation begins during—	The applicable percentage is—
1987	.25
1988	.50
1989	.75
1990 or thereafter	100

(ii) *Exception for certain applicable election years beginning after 1987*. [Reserved]

(iii) *Example*. The provisions of paragraph (b)(1) of this section may be illustrated by the following example.

Example. B is a corporation that has historically used a June 30 taxable year. For its taxable year beginning July 1, 1987, B elects to be an S corporation and elects under § 1.444–1T(b)(3) to retain its June 30 taxable year. Had B changed to a calendar year, its required year under section 1378, B's shareholders would not have been entitled to the 4-year spread under section 806(e)(2)(C) of the Tax Reform Act of 1986 because B was not an S corporation for its taxable year beginning in 1986. Nevertheless, for purposes of determining the required payment for B's applicable election year beginning July 1, 1987, the applicable percentage is 25 percent.

(2) *Adjusted highest section 1 rate*—(i) *General rule*. For any applicable election year, the term ''adjusted highest section 1 rate'' means the highest rate of tax under section 1 applicable to the period defined in paragraph (b)(2)(ii) of this section, plus 1 percentage point. Notwithstanding the preceding sentence, the adjusted highest section 1 rate is 36 percent for applicable election years beginning in 1987. For purposes of this section, the highest rate of tax is determined without regard to the effect of section 1(g), relating to the phaseout of the 15-percent rate and personal exemptions.

(ii) *Period for determining highest section 1 rate*. For purposes of paragraph (b)(2)(i) of this section, the period for determining the highest rate of tax under section 1 is the 12 month period that—

(A) Ends with the required taxable year for the applicable election year, and

(B) Includes the end of the base year.

For example, assume that a partnership's applicable election year begins on October 1, 1988 and that the required taxable year for such applicable election year is December 31. Based upon these facts, the period for determining the highest section 1 rate is the 12-month period ending December 31, 1988.

(3) *Base year*. The term ''base year'' means, with respect to any applicable election year, the taxable year of the partnership or S corporation preceding such applicable election year.

(4) *Special rules for certain applicable election years*—(i) *First applicable election year of new entities*. If an applicable election year is a partnership's or S corporation's first year in existence (*i.e.*, the partnership or S corporation is newly formed and therefore does not have a base year), the required payment for such applicable election year is zero.

(ii) *Applicable election years ending prior to the required taxable year*. If a partnership or S corporation makes a section 444 election and the resulting applicable election year (the ''first applicable election year'') of the partnership or S corporation ends prior to the last day of the required year, the required payment for the first applicable election year is zero. See example (5) in paragraph (b)(5)(vi) of this section.

(5) *Net base year income*—(i) *In general*. Except as provided in paragraph (b)(5)(v) of this section (relating to short base years), the net base year income of a partnership or S corporation is the sum of—

(A) The deferral ratio multiplied by the partnership's or S corporation's net income for the base year, plus

(B) The excess (if any) of—

(*1*) The deferral ratio multiplied by the aggregate amount of applicable

payments made by the partnership or S corporation during the base year, over

(*2*) The aggregate amount of such applicable payments made during the deferral period of the base year.

The term ''deferral ratio'' means the ratio which the number of months in the deferral period (as defined in § 1.444–1T (b)(4)) of the applicable election year bears to 12 months.

(ii) *Partnership net income.* For purposes of paragraph (b)(5)(i) of this section—

(A) *In general.* The net income of the partnership is the amount (not below zero) determined by taking into account the aggregate amount of the partnership's items described in section 702(a), except for—

(*1*) Credits,

(*2*) Tax-exempt income, and

(*3*) Guaranteed payments under section 707(c).

(B) *Treatment of deductions and losses.* For purposes of determining the aggregate amount of partnership items, deductions and losses are treated as negative income. Thus, for example, if under section 702(a) a partnership has $1,000 of ordinary taxable income, $500 of specially allocated deductions, and $300 of capital loss, the net income of the partnership is $200 ($1,000–$500–$300).

(C) *Partner limitations disregarded.* Any limitation on the amount of a partnership item described in section 702(a) which may be taken into account for purposes of computing the taxable income of a partner shall be disregarded in computing the net income of the partnership.

(iii) *S corporation net income.* For purposes of paragraph (b)(5)(i) of this section—

(A) *In general.* The net income of an S corporation is the amount (not below zero) determined by taking into account the aggregate amount of the S corporation's items described in section 1366(a) (other than credits and tax-exempt income). If the S corporation was a C corporation for the base year, the taxable income of the C corporation shall be treated as the net income of the S corporation for such year.

(B) *Treatment of deductions and losses.* For purposes of determining the aggregate amount of S corporation items, deductions and losses are treated as negative income. Thus, for example, if under section 1366(a) an S corporation has $2,000 of ordinary taxable income, $1,000 of deductions described in section 1366(a)(1)(A) of the Code, and $500 of capital loss, the net income of the S corporation is $500 ($2,000–$1,000–$500).

(C) *Shareholder limitations disregarded.* Any limitation on any amount described in section 1366(a) which may be taken into account for purposes of computing the taxable income of a shareholder shall be disregarded in computing the net income of the S corporation.

(iv) *Applicable payments*—(A) *In general.* The term *applicable payment* means any amount deductible in the base year that is includable at any time, directly or indirectly, in the gross income of a taxpayer that during the base year is a partner or shareholder.

(B) *Exceptions.* The term *applicable payment* does not include any guaranteed payments under section 707(c).

(C) *Special rule for corporation electing S status.* If an S corporation was a C corporation for the base year, the corporation shall be treated as if it were an S corporation for the base year for purposes of determining the amount of applicable payments under this section. Thus, amounts deductible by the C corporation in the base year that are includable at any time in the gross income of a taxpayer that is a shareholder during the base year are treated as if from an S corporation, and therefore within the meaning of the term ''applicable payments.''

(D) *Special rules for certain payments*—(*1*) *Certain indirect payments.* For purposes of paragraph (b)(5)(iv)(A) of this section, an amount is indirectly includable in the gross income of a partner or shareholder of a partnership or S corporation that has a section 444 election in effect (an electing partnership or S corporation) if the amount is includable in the gross income of—

(*i*) The spouse (other than a spouse who is legally separated from the partner or shareholder under a decree of divorce or separate maintenance) or child (under age 14) of such partner or shareholder, or

(*ii*) A corporation more than 50 percent (measured by fair market value) of which is owned in the aggregate by partners or shareholders (and individuals related under paragraph (b)(5)(iv)(D)(*1*)(*i*) of this section to any such partners or shareholders), of the electing partnership or S corporation, or

(*iii*) A partnership more than 50 percent of the profits and capital of which is owned in the aggregate by partners or shareholders (and individuals related under paragraph (b)(5)(iv)(D)(*1*)(*i*) of this section to any such partners or shareholders) of the electing partnership or S corporation, or

(*iv*) A trust more than 50 percent of the beneficial ownership of which is owned in the aggregate by partners or shareholders (and individuals related under paragraph (b)(5)(iv)(D)(*1*)(*i*) of this section to any such partners or shareholders), of the electing partnership or S corporation.

For purposes of this paragraph (b)(5)(iv)(D)(*1*), ownership by any person described in this paragraph (b)(5)(iv)(D)(*1*) shall be treated as ownership by the partners or shareholders of the electing partnership or S corporation. This paragraph (b)(5)(iv)(D)(*1*) does not apply to amounts deductible by a partnership or S corporation that has made a section 444 election (the ''deducting partnership'') and included in the gross income of a partnership or S corporation defined in paragraphs (b)(5)(iv)(D)(*1*) (*ii*) or (*iii*) of this section (the ''including partnership''), if the including partnership has the same taxable year as the deducting partnership and the including partnership has a section 444 election in effect. Furthermore, notwithstanding the general effective date provided in § 1.7519–3T, this paragraph (b)(5)(iv)(D)(*1*) is effective for amounts deductible on or after June 1, 1988.

(*2*) *Payments by a downstream controlled partnership*—(*i*) *In general*. If a partnership or S corporation has made a section 444 election, any amounts deducted by a downstream controlled partnership will be considered deducted by the partnership or S corporation that has made the section 444 election for purposes of determining the applicable payments of the partnership or S corporation that has made the section 444 election.

(*ii*) *Definition of a downstream controlled partnership*. If a partnership or S corporation that has made a section 444 election owns more than 50 percent of a partnership's profits and capital, such owned partnership is considered a downstream controlled partnership for purposes of paragraph (b)(5)(iv)(D)(*2*)(*i*) of this section. Furthermore, if more than 50 percent of a partnership's profits and capital are owned by a downstream controlled partnership, such owned partnership is considered a downstream controlled partnership for purposes of paragraph (b)(5)(iv)(D)(*2*)(*i*) of this section.

(*3*) *Examples*. The provisions of this paragraph (b)(5)(iv)(D) may be illustrated by the following examples.

Example (1). I1 and I2, calendar year individuals, own 100 percent of the profits and capital of C1, a partnership. In addition to owning C1, I1 and I2 also own 100 percent of the profits and capital of C2, a calendar year partnership. For its taxable years beginning February 1, 1987, 1988, and 1989, C1 has a section 444 election in effect to use a January 31 taxable year. During its base years beginning February 1, 1986, 1987, and 1988, C1 deducted $10,000, $11,000, and $12,000, respectively that was included in C2's gross income. Furthermore, of the $12,000 deducted by C1 for its taxable year beginning February 1, 1988, $7,000 was deducted during the period June 1, 1988 to January 31, 1989. Pursuant to paragraph (b)(5)(iv)(D)(*1*) of this section, the $7,000 deducted by C1 on or after June 1, 1988, and included in C2's gross income is considered an applicable payment for C1's base year beginning February 1, 1988. Amounts deducted by C1 prior to June 1, 1988, are not subject to paragraph (b)(5)(iv)(D)(*1*) of this section.

Example (2). The facts are the same as in example (1), except that I1 and I2 own only 51 percent of C2's profits and capital. Since the two partners in C1 (*i.e.*, I1 and I2) own more than 50 percent of C2's profits and capital, C2 is considered controlled by the partners of C1 pursuant to paragraph (b)(5)(iv)(D)(*1*)(*iii*) of this section. Thus, the conclusions in example (1) are unchanged. Furthermore, if the $7,000 deducted by C1 was included in the income of a partnership more than 50 percent of the profits and capital of which is owned by C2, such $7,000 would be considered an applicable payment for its base year beginning February 1, 1988.

Example (3). The facts are the same as in example (1), except that for its taxable years beginning February 1, 1987, 1988, and 1989, C2

has a section 444 election in effect to use a January 31 taxable year. Since both C1 and C2 have the same taxable year and both have section 444 elections in effect, paragraph (b)(5)(iv)(D)(*1*) of this section does not apply to the $7,000 deducted by C1 for its base year beginning February 1, 1988.

Example (4). I3 and I4, calendar year individuals, own 100 percent of the profits and capital of C3, a partnership. C3 has made a section 444 election to retain a year ending June 30 for its taxable year beginning July 1, 1987. Furthermore, C3 owns more than 50 percent of the profits and capital of C4, a partnership that historically used a June 30 taxable year. Pursuant to §1.706–3T(b), C4 retains its year ending June 30 for its taxable year beginning July 1, 1987. For its taxable year beginning July 1, 1986, C4 deducted $20,000 that was included in I3's gross income. Pursuant to paragraph (b)(5)(iv)(D)(*2*) of this section, the $20,000 deducted by C4 is considered an applicable payment by C3 for its base year beginning July 1, 1986.

Example (5). The facts are the same as in example (4), except that the $20,000 deducted by C4 is included in the gross income of a calendar year partnership 100 percent owned by I3 and I4. Pursuant to paragraphs (b)(5)(v)(D) (*1*) and (*2*) of this section, the $20,000 deducted by C4 is considered an applicable payment by C3 for its base year beginning July 1, 1986.

Example (6). The facts are the same as in example (4), except that instead of directly owning a portion of C4, C3 owns more than 50 percent of the profits and capital of C5. Furthermore, C5 owns more than 50 percent of the profits and capital of C4. Pursuant to paragraph (b)(5)(iv)(D)(*2*)(*ii*) of this section, both C5 and C4 are considered downstream controlled partnerships of C3. Thus, pursuant to paragraph (b)(5)(iv)(D)(*2*)(*i*) of this section, the $20,000 deducted by C4 is considered an applicable payment by C3 for its base year beginning July 1, 1986.

(v) *Special rule for base year of less than twelve months*—(A) *In general.* If a base year is a taxable year of less than twelve months (a ''short base year''), net base year income for such year is an amount equal to the excess, if any, of—

(*1*) The deferral ratio multiplied by the annualized short base year income, over

(*2*) Applicable payments made during the deferral period of the applicable election year following the base year.

(B) *Annualized short base year income.* The annualized short base year income is determined by—

(*1*) Increasing the net income for the short base year by applicable payments deductible in the short base year, and

(*2*) Multiplying the short base year income as increased in paragraph (b)(5)(v)(B)(*1*) of this section by twelve, and dividing the result by the number of months in the short base year.

(vi) *Examples.* The provisions of paragraph (b)(5) of this section may be illustrated by the following examples.

Example (1). D, a partnership, is owned 10 percent by a C corporation with a September 30 taxable year and 90 percent by calendar year individuals. D has historically used a September 30 taxable year. For its taxable year beginning October 1, 1987, D makes a section 444 election to retain its September 30 taxable year. For the base year from October 1, 1986 to September 30, 1987, D has net income of $200,000 and no applicable payments. D's deferral ratio is 3/12 (the ratio of the number of months in the deferral period to 12 months). Based upon these facts, D has net base year income of $50,000 ($200,000 × 3/12).

Example (2). The facts are the same as in example (1) except that D's net income for the base year is $140,000, after applicable payments of $60,000. Of the applicable payments $15,000 were deductible during the deferral period of the base year. Based upon these facts, D has net base year income of $35,000, determined as follows:

Net income multiplied by deferral ratio	$140,000 × 3/12		$35,000
Plus the excess, if any, of applicable payments multiplied by deferral ratio	$60,000 × 3/12		
		$15,000	
Over aggregate amount of applicable payments deductible during deferral period of base year		$15,000	0
Net base year income			$35,000

Example (3). The facts are the same as in example (2) except that of the $60,000 applicable payments only $10,000 are deductible during the deferral period of the base year. Based on these facts, D has net base year income of $40,000, determined as follows:

Net income multiplied by deferral ratio	$140,000 x 3/12		$35,000
Plus the excess, if any, of applicable payments multiplied by deferral ratio	$60,000 x 3/12	$15,000	.....
Over aggregate amount of applicable payments deductible during deferral period of base year		$10,000	
Net base year income			$5,000
			$40,000

Example (4). E is a C corporation that has historically used a January 31 taxable year. For its taxable year beginning February 1, 1987, E makes an election to be an S corporation and also makes a section 444 election to retain its January 31 taxable year. E's taxable income for the taxable year beginning February 1, 1986 to January 31, 1987 is $120,000. Pursuant to paragraph (b)(5)(iii)(A) of this section, the base year for X's first applicable election year is the taxable year beginning February 1, 1986 and ending January 31, 1987. Thus, E's net income for the base year is $120,000. During the base year, E pays its sole shareholder, A, a salary of $5,000 a month plus a $30,000 bonus on January 15, 1987. Thus, under paragraph (b)(5)(iv)(C) of this section, E's applicable payments for the base year are $90,000, of which $55,000 are applicable payments deductible during the deferral period of the base year (February 1 to December 31, 1986). Based upon these facts, E's net base year income is $137,500, determined as follows:

Net income multiplied by deferral ratio	$120,000 x 11/12		$110,000
Plus the excess, if any, of applicable payments multiplied by the deferral ratio	$90,000 x11/12	$82,500	
Over aggregate amount of applicable payments deductible during deferral period of base year		$55,000	$27,500
Net base year income			$137,500

Example (5). E, a corporation that has historically used a taxable year ending July 31, makes an election to be an S corporation for its taxable year beginning August 1, 1987. For that year, E also makes a section 444 election to use a taxable year ending September 30. Thus, E has two applicable election years beginning in 1987, the first beginning August 1, 1987 and ending September 30, 1987, and the second beginning October 1, 1987 and ending September 30, 1988. E's required year under section 1378 is the calendar year. Because E's first applicable election year ends prior to the last day of E's required year (*i.e.,* December 31, 1987), the required payment for E's first applicable election year is zero. However, E is required to file a return for such year as provided in § 1.7519–2T.

Example (6). The facts are the same as in example (5). E's second applicable election year is the year from October 1, 1987 to September 30, 1988, and the base year for the second applicable election year is a period of less than 12 months (i.e., August 1, 1987 to September 30, 1987). Thus, E must compute its net base year income using the special rule for short base years provided in paragraph (b)(5)(v) of this section. Assume E's net income for the short base year is $50,000, and E's applicable payments for the short base year are $15,000. Pursuant to paragraph (b)(5)(v)(B) of this section, E's annualized short base year net income is $390,000 ($65,000 x 12/2). Furthermore, assume E's applicable payments for the deferral period of its second applicable election year are $20,000.

Based on these facts, the net base year income for the applicable election year beginning October 1, 1987 is $77,500, computed as follows:

Annualized short base year income multiplied by deferral ratio	$390,000 x 3/12	
		$97,500
Less: Applicable payments for deferral period		$20,000
Net base year income		$77,500

(c) *Refunds of required payments.* A partnership of S corporation is entitled to make a claim for refund, in accordance with the procedures provided in § 1.7519–2T(a)(6), if—

(1) The amount specified in paragraph (a)(3)(i) of this section is less than the amount specified in paragraph (a)(3)(ii) of this section; or

(2) The partnership or S corporation terminates its section 444 election, within the meaning of § 1.444–1T(a)(5).

(d) *Example.* The provisions of this section may be illustrated by the following examples.

Example (1). G, a partnership, is owned 10 percent by a C corporation with a June 30 taxable year, and 90 percent by calendar year individuals. G has historically used a June 30 taxable year. For its taxable year beginning July 1, 1987, G makes a section 444 election to retain its June 30 taxable year. For the base year from July 1, 1986 to June 30, 1987, G has net income of $300,000 and no applicable payments. G's deferral ratio is 6/12 (the ratio of the number of months in the deferral period to 12 months). Based on these facts, G's net base year income is $150,000 ($300,000 x 6/12). Thus, G's required payment for its first applicable election year is $13,500 ($150,000 of net base year income multiplied by 9 percent (the product of the applicable percentage for 1987, 25 percent, and the highest section 1 rate for 1987, 36 percent)).

Example (2). The facts are the same as in example (1). In addition, G continues its section 444 election for the taxable year beginning July 1, 1988, and G's net base year income for the year beginning July 1, 1987 is $150,000. The required payment for G's second applicable election year is $8,250 ($150,000 of net base year income multiplied by 14.5 percent (the product of the applicable percentage for 1988 applicable election years, 50 percent, and the adjusted highest section 1 rate for 1988, 29 percent) less G's $13,500 required payment for the first applicable election year).

Example (3). H, a partnership with a taxable year ending September 30, desires to make a section 444 election for its taxable year beginning October 1, 1987. H is 15 percent owned by I, a partnership with a taxable year ending September 30, and 85 percent owned by calendar year individuals. Assume H and I are qualified to make section 444 elections as a result of the ''same taxable year exception'' provided in § 1.444–2T(e). If H and I make section 444 elections, they must each make a required payment (assuming the amount computed under paragraph (a)(3) of this section is greater than $500). Pursuant to paragraph (a)(3) of this section, the required payments of H and I are calculated independent of each other. Thus, in determining the amount of its required payment, I may not exclude its income attributable to H, even though H must also make a required payment on the same income.

Example (4). The facts are the same as in example (1) except that H is 90 percent owned by I and 10 percent owned by calendar year individuals. Pursuant to § 1.706–3T, if I makes a section 444 election to retain its taxable year ending September 30, H's required year will be September 30, because H's majority interest partner will have a September 30 taxable year. Thus, H is not required to make a section 444 election and a required payment in order to use a September 30 taxable year. I, however, must make a required payment.

[T.D. 8205, 53 FR 19706, May 27, 1988]

§ 1.7519–2T Required payments—procedures and administration (temporary).

(a) *Payment and return required*—(1) *In general.* With respect to any taxable year for which a partnership or S corporation has a section 444 election in effect (an ''applicable election year''), the partnership or S corporation shall file a return as provided in paragraphs (a) (2) and (3) of this section and make a payment, if required, as provided in paragraph (a)(4) of this section.

(2) *Return required*—(i) *In general.* A return showing the required payment shall be made, even if the required payment for the applicable election year is zero. For an applicable election year beginning in 1987, the return shall be made on Form 720, ''Quarterly Federal Excise Tax Return.'' For an applicable election year beginning after 1987, the return shall also be made on Form 720

unless another form is prescribed by the Commissioner.

(ii) *Procedure if amount for applicable election year (and all proceeding years) is not greater than $500.* If a partnership or S corporation is not required to make a payment under section 7519 for an applicable election year, the partnership or S corporation should type or legibly print ''zero'' on the appropriate line of the prescribed form.

(3) *Time and place for filing return*—(i) *Applicable election years beginning in 1987.* For an applicable election year beginning in 1987, the Form 720 must be filed with the Service Center indicated by the instructions for the Form 720. The date for filing such form is as follows—

(A) *Taxpayers that would otherwise file Form 720 for the second quarter of 1988.* Taxpayers that are required, without regard to this section, to file Form 720 for the second quarter of 1988 (*e.g.*, taxpayers reporting liability for manufacturers excise tax) must file Form 720 by the normal due date of such form for the second quarter of 1988. Thus, such taxpayers must generally file Form 720 on or before July 31, 1988. However, if such taxpayers must also report tax imposed by section 4251 (relating to communications services tax), sections 4261 and 4271 (relating to air transportation tax), or section 4986 (relating to windfall profits tax) for the second quarter of 1988, they must file Form 720 on or before August 31, 1988.

(B) *Other taxpayers.* Taxpayers that are not described in paragraph (a)(3)(i)(A) of this section (*i.e.*, taxpayers that but for this section would not be required to file Form 720 for the second quarter of 1988) must file Form 720 on or before July 31, 1988.

(ii) *Applicable election years beginning after 1987*—(A) *Return made on Form 720.* [Reserved].

(B) *Return made on form other than Form 720.* For an applicable election year beginning after 1987, the return showing the required payment is to be filed with the Service Center indicated by the instructions for the form prescribed for payment. The return must be filed on or before the date prescribed by the instructions to the form.

(iii) *Special rule for back-up section 444 election.* See §1.444–3T(b)(4)(iii) for a special rule that may extend the due date for filing a return required by paragraph (a)(2) of this section.

(4) *Time and place for making required payment*—(i) *Applicable election years beginning in 1987.* For an applicable election year beginning in 1987, the required payment is due and payable without assessment and notice on or before the date the taxpayer's Form 720 for the second quarter is due (as specified in paragraph (a)(3) of this section). The required payment must be paid by check or money order, and such check or money order must indicate the partnership's or S corporation's taxpayer identification number and must include the statement: ''IRS NO. 11 PAYMENT.'' The check or money order must be sent, together with Form 720, to the Service Center indicated by the instructions for the Form 720.

(ii) *Applicable election years beginning after 1987.* For an applicable election year beginning after 1987, the required payment is due and payable without assessment or notice, on or before May 15 of the calendar year following the calendar year in which the applicable election year begins.

(iii) *Special rule for back-up section 444 election.* See §1.444–3T(b)(4)(iii) for a special rule that may extend the due date for making a required payment.

(5) *Penalties for failure to pay.* In the case of any failure by a partnership or S corporation to pay the required payment on or before the date prescribed in paragraph (a)(4) of this section, there shall be assessed on such partnership or S corporation a penalty of 10 percent of the underpayment. For purposes of this section, the term ''underpayment'' means the excess of the amount of the payment required under this section over the amount (if any) of such payment paid on or before the date prescribed in paragraph (a)(4) of this section.

(6) *Refund of required payment*—(i) *In general.* If a partnership or S corporation is entitled to make a claim for refund pursuant to §1.7519–1T(c), such partnership or S corporation should file a claim for refund, as provided in paragraph (a)(6)(ii) of this section. However, in no event shall a refund be made prior to April 15 of the second calendar year that follows the calendar

year in which an applicable election year begins. For example, assume a partnership made a section 444 election to retain its taxable year for its taxable year beginning October 1, 1987, and as a result made a required payment for such year. Further assume that the partnership terminates its election for its taxable year beginning October 1, 1988. Based on these facts, the partnership will be entitled to a refund, but no earlier than April 15, 1989.

(ii) *Procedures for claiming refund.* [Reserved].

(iii) *Interest on refund.* No interest shall be allowed with respect to any refund of a required payment under § 1.7519–1T(C).

(b) *Assessment and collection of payment.* A required payment shall be assessed and collected in the same manner as if it were a tax imposed by subtitle C. Furthermore, no deduction shall be allowable to a partnership or S corporation (or their owners) with respect to the required payment.

(c) *Termination due to willful failure.* See § 1.444–1T(a)(5)(i)(C), which provides that willful failure to comply with the requirements of this section will result in the termination of the section 444 election.

(d) *Negligence and fraud penalties made applicable.* For purposes of section 6653, relating to additions to tax for negligence and fraud, any payment required by this section shall be treated as a tax.

[T.D. 8205, 53 FR 19709, May 27, 1988]

§ 1.7519–3T Effective date (temporary).

The provisions of §§ 1.7519–1T through § 1.7519–3T are effective for taxable years beginning after December 31, 1986.

[T.D. 8205, 53 FR 19710, May 27, 1988]

GENERAL ACTUARIAL VALUATIONS

§ 1.7520–1 Valuation of annuities, unitrust interests, interests for life or terms of years, and remainder or reversionary interests.

(a) *General actuarial valuations.* (1) Except as otherwise provided in this section and in § 1.7520–3 (relating to exceptions to the use of prescribed tables under certain circumstances), in the case of certain transactions after April 30, 1989, subject to income tax, the fair market value of annuities, interests for life or for a term of years (including unitrust interests), remainders, and reversions is their present value determined under this section. See § 20.2031–7(d) (and, for certain prior periods, § 20.2031–7A) of this chapter, Estate Tax Regulations, for the computation of the value of annuities, unitrust interests, life estates, terms for years, remainders, and reversions, other than interests described in paragraphs (a)(2) and (a)(3) of this section.

(2) For a transfer to a pooled income fund after April 30, 1999, see § 1.642(c)–6(e) (or, for certain prior periods, § 1.642(c)–6A) with respect to the valuation of the remainder interest.

(3) For a transfer to a charitable remainder annuity trust after April 30, 1989, see § 1.664–2 with respect to the valuation of the remainder interest. See § 1.664–4 with respect to the valuation of the remainder interest in property transferred to a charitable remainder unitrust.

(b) *Components of valuation*—(1) *Interest rate component*—(i) *Section 7520 Interest rate.* The section 7520 interest rate is the rate of return, rounded to the nearest two-tenths of one percent, that is equal to 120 percent of the applicable Federal mid-term rate, compounded annually, for purposes of section 1274(d)(1), for the month in which the valuation date falls. In rounding the rate to the nearest two-tenths of a percent, any rate that is midway between one two-tenths of a percent and another is rounded up to the higher of those two rates. For example, if 120 percent of the applicable Federal mid-term rate is 10.30, the section 7520 interest rate component is 10.4. The section 7520 interest rate is published monthly by the Internal Revenue Service in the Internal Revenue Bulletin (see § 601.601(d)(2)(ii)(*b*) of this chapter).

(ii) *Valuation date.* Except as provided in § 1.7520–2, the valuation date is the date on which the transaction takes place.

(2) *Mortality component.* The mortality component reflects the mortality data most recently available from the United States census. As new mortality data becomes available after each decennial census, the mortality

component described in this section will be revised periodically and the revised mortality component tables will be published in the regulations at that time. For transactions with valuation dates after April 30, 1999, the mortality component table (Table 90CM) is contained in §20.2031–7(d)(7) of this chapter. See §20.2031–7A of this chapter for mortality component tables applicable to transactions for which the valuation date falls before May 1, 1999.

(c) *Tables*. The present value on the valuation date of an annuity, life estate, term of years, remainder, or reversion is computed by using the section 7520 interest rate component that is described in paragraph (b)(1) of this section and the mortality component that is described in paragraph (b)(2) of this section. Actuarial factors for determining these present values are included in tables in these regulations and in publications by the Internal Revenue Service. If a special factor is required in order to value an interest, the Internal Revenue Service will furnish the factor upon a request for a ruling. The request for a ruling must be accompanied by a recitation of the facts, including the date of birth for each measuring life and copies of relevant instruments. A request for a ruling must comply with the instructions for requesting a ruling published periodically in the Internal Revenue Bulletin (see Rev. Proc. 94–1, 1994–1 I.R.B. 10, and subsequent updates, and §§601.201 and 601.601(d)(2)(ii)(*b*) of this chapter) and include payment of the required user fee.

(1) *Regulation sections containing tables with interest rates between 4.2 and 14 percent for valuation dates after April 30, 1999*. Section 1.642(c)–6(e)(6) contains Table S used for determining the present value of a single life remainder interest in a pooled income fund as defined in §1.642(c)–5. See §1.642(c)–6A for actuarial factors for one life applicable to valuation dates before May 1, 1999. Section 1.664–4(e)(6) contains Table F (payout factors) and Table D (actuarial factors used in determining the present value of a remainder interest postponed for a term of years). Section 1.664–4(e)(7) contains Table U(1) (unitrust single life remainder factors). These tables are used in determining the present value of a remainder interest in a charitable remainder unitrust as defined in §1.664–3. See §1.664–4A for unitrust single life remainder factors applicable to valuation dates before May 1, 1999. Section 20.2031–7(d)(6) of this chapter contains Table B (actuarial factors used in determining the present value of an interest for a term of years), Table K (annuity end-of-interval adjustment factors), and Table J (term certain annuity beginning-of-interval adjustment factors). Section 20.2031–7(d)(7) of this chapter contains Table S (single life remainder factors), and Table 90CM (mortality components). These tables are used in determining the present value of annuities, life estates, remainders, and reversions. See §20.2031–7A of this chapter for single life remainder factors and mortality components applicable to valuation dates before May 1, 1999.

(2) *Internal Revenue Service publications containing tables with interest rates between 2.2 and 22 percent for valuation dates after April 30, 1999*. The following documents are available for purchase from the Superintendent of Documents, United States Government Printing Office, Washington, DC 20402:

(i) Internal Revenue Service Publication 1457, ''Actuarial Values, Book Aleph,'' (7–1999). This publication includes tables of valuation factors, as well as examples that show how to compute other valuation factors, for determining the present value of annuities, life estates, terms of years, remainders, and reversions, measured by one or two lives. These factors may also be used in the valuation of interests in a charitable remainder annuity trust as defined in §1.664–2 and a pooled income fund as defined in §1.642(c)–5. See §20.2031–7A of this chapter for publications containing tables for valuation dates before May 1, 1999.

(ii) Internal Revenue Service Publication 1458, ''Actuarial Values, Book Beth,'' (7–1999). This publication includes term certain tables and tables of one and two life valuation factors for determining the present value of remainder interests in a charitable remainder unitrust as defined in §1.664–3. See §1.664–4A for publications containing tables for valuation dates before May 1, 1999.

(iii) Internal Revenue Service Publication 1459, ''Actuarial Values, Book Gimel,'' (7–1999). This publication includes tables for computing depreciation adjustment factors. See §1.170A–12.

(d) *Effective date*. This section applies after April 30, 1989.

[T.D. 8540, 59 FR 30149, June 10, 1994, as amended by T.D. 8819, 64 FR 23210, 23229, Apr. 30, 1999; T.D. 8886, 65 FR 36928, 36943, June 12, 2000]

§ 1.7520–2 Valuation of charitable interests.

(a) *In general*—(1) *Valuation*. Except as otherwise provided in this section and in §1.7520–3 (relating to exceptions to the use of prescribed tables under certain circumstances), the fair market value of annuities, interests for life or for a term of years, remainders, and reversions for which an income tax charitable deduction is allowable is the present value of such interests determined under §1.7520–1.

(2) *Prior-month election rule*. If any part of the property interest transferred qualifies for an income tax charitable deduction under section 170(c), the taxpayer may elect (under paragraph (b) of this section) to compute the present value of the interest transferred by use of the section 7520 interest rate for the month during which the interest is transferred or the section 7520 interest rate component for either of the 2 months preceding the month during which the interest is transferred. Paragraph (b) of this section explains how a prior-month election is made. The interest rate for the month so elected is the applicable section 7520 interest rate. If the actuarial factor for either or both of the 2 months preceding the month during which the interest is transferred is based on a mortality experience that is different from the mortality experience at the date of the transfer and if the taxpayer elects to use the section 7520 rate for a prior month with the different mortality experience, the taxpayer must use the actuarial factor derived from the mortality experience in effect during the month of the section 7520 rate elected. All actuarial computations relating to the transfer must be made by applying the interest rate component and the mortality component of the month elected by the taxpayer.

(3) *Transfers of more than one interest in the same property*. If a taxpayer transfers more than one interest in the same property at the same time, for purposes of valuing the transferred interests, the taxpayer must use the same interest rate and mortality component for each interest in the property transferred. If more than one interest in the same property is transferred in two or more separate transfers at different times, the value of each interest is determined by the use of the interest rate component and mortality component in effect during the month of the transfer of that interest or, if applicable under paragraph (a)(2) of this section, either of the two months preceding the month of the transfer.

(4) *Information required with tax return*. The following information must be attached to the income tax return (or to the amended return) if the taxpayer claims a charitable deduction for the present value of a temporary or remainder interest in property—

(i) A complete description of the interest that is transferred, including a copy of the instrument of transfer;

(ii) The valuation date of the transfer;

(iii) The names and identification numbers of the beneficiaries of the transferred interest;

(iv) The names and birthdates of any measuring lives, a description of any relevant terminal illness condition of any measuring life, and (if applicable) an explanation of how any terminal illness condition was taken into account in valuing the interest; and

(v) A computation of the deduction showing the applicable section 7520 interest rate that is used to value the transferred interest.

(5) *Place for filing returns*. See section 6091 of the Internal Revenue Code and the regulations thereunder for the place for filing the return or other document required by this section.

(b) *Election of interest rate component*—(1) *Time for making election*. A taxpayer makes a prior-month election under paragraph (a)(2) of this section by attaching the information described in

paragraph (b)(2) of this section to the taxpayer's income tax return or to an amended return for that year that is filed within 24 months after the later of the date the original return for the year was filed or the due date for filing the return.

(2) *Manner of making election*. A statement that the prior-month election under section 7520(a) of the Internal Revenue Code is being made and that identifies the elected month must be attached to the income tax return (or to the amended return).

(3) *Revocability*. The prior-month election may be revoked by filing an amended return within 24 months after the later of the date the original return of tax for the year was filed or the due date for filing the return. The revocation must be filed in the place referred to in paragraph (a)(5) of this section.

(c) *Effective dates*. Paragraph (a) of this section is effective as of May 1, 1989. Paragraph (b) of this section is effective for elections made after June 10, 1994.

[T.D. 8540, 59 FR 30149, June 10, 1994]

§ 1.7520–3 Limitation on the application of section 7520.

(a) *Internal Revenue Code sections to which section 7520 does not apply*. Section 7520 of the Internal Revenue Code does not apply for purposes of—

(1) Part I, subchapter D of subtitle A (section 401 et. seq.), relating to the income tax treatment of certain qualified plans. (However, section 7520 does apply to the estate and gift tax treatment of certain qualified plans and for purposes of determining excess accumulations under section 4980A);

(2) Sections 72 and 101(b), relating to the income taxation of life insurance, endowment, and annuity contracts, unless otherwise provided for in the regulations under sections 72, 101, and 1011 (see, particularly, §§ 1.101–2(e)(1)(iii)(*b*)(*2*), and 1.1011–2(c), *Example 8*);

(3) Sections 83 and 451, unless otherwise provided for in the regulations under those sections;

(4) Section 457, relating to the valuation of deferred compensation, unless otherwise provided for in the regulations under section 457;

(5) Sections 3121(v) and 3306(r), relating to the valuation of deferred amounts, unless otherwise provided for in the regulations under those sections;

(6) Section 6058, relating to valuation statements evidencing compliance with qualified plan requirements, unless otherwise provided for in the regulations under section 6058;

(7) Section 7872, relating to income and gift taxation of interest-free loans and loans with below-market interest rates, unless otherwise provided for in the regulations under section 7872; or

(8) Section 2702(a)(2)(A), relating to the value of a nonqualified retained interest upon a transfer of an interest in trust to or for the benefit of a member of the transferor's family; and

(9) Any other sections of the Internal Revenue Code to the extent provided by the Internal Revenue Service in revenue rulings or revenue procedures. (See §§ 601.201 and 601.601 of this chapter).

(b) *Other limitations on the application of section 7520*—(1) *In general*—(i) *Ordinary beneficial interests*. For purposes of this section:

(A) An *ordinary annuity interest* is the right to receive a fixed dollar amount at the end of each year during one or more measuring lives or for some other defined period. A standard section 7520 annuity factor for an ordinary annuity interest represents the present worth of the right to receive $1.00 per year for a defined period, using the interest rate prescribed under section 7520 for the appropriate month. If an annuity interest is payable more often than annually or is payable at the beginning of each period, a special adjustment must be made in any computation with a standard section 7520 annuity factor.

(B) An *ordinary income interest* is the right to receive the income from, or the use of, property during one or more measuring lives or for some other defined period. A standard section 7520 income factor for an ordinary income interest represents the present worth of the right to receive the use of $1.00 for a defined period, using the interest rate prescribed under section 7520 for the appropriate month.

(C) An *ordinary remainder or reversionary interest* is the right to receive an interest in property at the end of

one or more measuring lives or some other defined period. A standard section 7520 remainder factor for an ordinary remainder or reversionary interest represents the present worth of the right to receive $1.00 at the end of a defined period, using the interest rate prescribed under section 7520 for the appropriate month.

(ii) *Certain restricted beneficial interests.* A *restricted beneficial interest* is an annuity, income, remainder, or reversionary interest that is subject to a contingency, power, or other restriction, whether the restriction is provided for by the terms of the trust, will, or other governing instrument or is caused by other circumstances. In general, a standard section 7520 annuity, income, or remainder factor may not be used to value a restricted beneficial interest. However, a special section 7520 annuity, income, or remainder factor may be used to value a restricted beneficial interest under some circumstances. See paragraph (b)(4) *Example 2* of this section, which illustrates a situation where a special section 7520 actuarial factor is needed to take into account the shorter life expectancy of the terminally ill measuring life. See §1.7520–1(c) for requesting a special factor from the Internal Revenue Service.

(iii) *Other beneficial interests.* If, under the provisions of this paragraph (b), the interest rate and mortality components prescribed under section 7520 are not applicable in determining the value of any annuity, income, remainder, or reversionary interest, the actual fair market value of the interest (determined without regard to section 7520) is based on all of the facts and circumstances if and to the extent permitted by the Internal Revenue Code provision applicable to the property interest.

(2) *Provisions of governing instrument and other limitations on source of payment*—(i) *Annuities.* A standard section 7520 annuity factor may not be used to determine the present value of an annuity for a specified term of years or the life of one or more individuals unless the effect of the trust, will, or other governing instrument is to ensure that the annuity will be paid for the entire defined period. In the case of an annuity payable from a trust or other limited fund, the annuity is not considered payable for the entire defined period if, considering the applicable section 7520 interest rate at the valuation date of the transfer, the annuity is expected to exhaust the fund before the last possible annuity payment is made in full. For this purpose, it must be assumed that it is possible for each measuring life to survive until age 110. For example, for a fixed annuity payable annually at the end of each year, if the amount of the annuity payment (expressed as a percentage of the initial corpus) is less than or equal to the applicable section 7520 interest rate at the date of the transfer, the corpus is assumed to be sufficient to make all payments. If the percentage exceeds the applicable section 7520 interest rate and the annuity is for a definite term of years, multiply the annual annuity amount by the Table B term certain annuity factor, as described in §1.7520–1(c)(1), for the number of years of the defined period. If the percentage exceeds the applicable section 7520 interest rate and the annuity is payable for the life of one or more individuals, multiply the annual annuity amount by the Table B annuity factor for 110 years minus the age of the youngest individual. If the result exceeds the limited fund, the annuity may exhaust the fund, and it will be necessary to calculate a special section 7520 annuity factor that takes into account the exhaustion of the trust or fund. This computation would be modified, if appropriate, to take into account annuities with different payment terms. See §25.7520–3(b)(2)(v) *Example 5* of this chapter, which provides an illustration involving an annuity trust that is subject to exhaustion.

(ii) *Income and similar interests*—(A) *Beneficial enjoyment.* A standard section 7520 income factor for an ordinary income interest may not be used to determine the present value of an income or similar interest in trust for a term of years or for the life of one or more individuals unless the effect of the trust, will, or other governing instrument is to provide the income beneficiary with that degree of beneficial enjoyment of the property during the term of the income interest that the

principles of the law of trusts accord to a person who is unqualifiedly designated as the income beneficiary of a trust for a similar period of time. This degree of beneficial enjoyment is provided only if it was the transferor's intent, as manifested by the provisions of the governing instrument and the surrounding circumstances, that the trust provide an income interest for the income beneficiary during the specified period of time that is consistent with the value of the trust corpus and with its preservation. In determining whether a trust arrangement evidences that intention, the treatment required or permitted with respect to individual items must be considered in relation to the entire system provided for in the administration of the subject trust. Similarly, in determining the present value of the right to use tangible property (whether or not in trust) for one or more measuring lives or for some other specified period of time, the interest rate component prescribed under section 7520 and §1.7520–1 may not be used unless, during the specified period, the effect of the trust, will or other governing instrument is to provide the beneficiary with that degree of use, possession, and enjoyment of the property during the term of interest that applicable state law accords to a person who is unqualifiedly designated as a life tenant or term holder for a similar period of time.

(B) *Diversions of income and corpus.* A standard section 7520 income factor for an ordinary income interest may not be used to value an income interest or similar interest in property for a term of years or for one or more measuring lives if—

(*1*) The trust, will, or other governing instrument requires or permits the beneficiary's income or other enjoyment to be withheld, diverted, or accumulated for another person's benefit without the consent of the income beneficiary; or

(*2*) The governing instrument requires or permits trust corpus to be withdrawn from the trust for another person's benefit during the income beneficiary's term of enjoyment without the consent of and accountability to the income beneficiary for such diversion.

(iii) *Remainder and reversionary interests.* A standard section 7520 remainder interest factor for an ordinary remainder or reversionary interest may not be used to determine the present value of a remainder or reversionary interest (whether in trust or otherwise) unless, consistent with the preservation and protection that the law of trusts would provide for a person who is unqualifiedly designated as the remainder beneficiary of a trust for a similar duration, the effect of the administrative and dispositive provisions for the interest or interests that precede the remainder or reversionary interest is to assure that the property will be adequately preserved and protected (e.g., from erosion, invasion, depletion, or damage) until the remainder or reversionary interest takes effect in possession and enjoyment. This degree of preservation and protection is provided only if it was the transferor's intent, as manifested by the provisions of the arrangement and the surrounding circumstances, that the entire disposition provide the remainder or reversionary beneficiary with an undiminished interest in the property transferred at the time of the termination of the prior interest.

(iv) *Pooled income fund interests.* In general, pooled income funds are created and administered to achieve a special rate of return. A beneficial interest in a pooled income fund is not ordinarily valued using a standard section 7520 income or remainder interest factor. The present value of a beneficial interest in a pooled income fund is determined according to rules and special remainder factors prescribed in §1.642(c)–6 and, when applicable, the rules set forth in paragraph (b)(3) of this section, if the individual who is the measuring life is terminally ill at the time of the transfer.

(3) *Mortality component.* The mortality component prescribed under section 7520 may not be used to determine the present value of an annuity, income interest, remainder interest, or reversionary interest if an individual who is a measuring life is terminally ill at the time of the transaction. For purposes of this paragraph (b)(3), an individual who is known to have an incurable illness or other deteriorating

physical condition is considered terminally ill if there is at least a 50 percent probability that the individual will die within 1 year. However, if the individual survives for eighteen months or longer after the date of the transaction, that individual shall be presumed to have not been terminally ill at the time of the transaction unless the contrary is established by clear and convincing evidence.

(4) *Examples*. The provisions of this paragraph (b) are illustrated by the following examples:

Example 1. Annuity funded with unproductive property. The taxpayer transfers corporation stock worth $1,000,000 to a trust. The trust provides for a 6 percent ($60,000 per year) annuity in cash or other property to be paid to a charitable organization for 25 years and for the remainder to be distributed to the donor's child. The trust specifically authorizes, but does not require, the trustee to retain the shares of stock. The section 7520 interest rate for the month of the transfer is 8.2 percent. The corporation has paid no dividends on this stock during the past 5 years, and there is no indication that this policy will change in the near future. Under applicable state law, the corporation is considered to be a sound investment that satisfies fiduciary standards. Therefore, the trust's sole investment in this corporation is not expected to adversely affect the interest of either the annuitant or the remainder beneficiary. Considering the 6 percent annuity payout rate and the 8.2 percent section 7520 interest rate, the trust corpus is considered sufficient to pay this annuity for the entire 25-year term of the trust, or even indefinitely. Although it appears that neither beneficiary would be able to compel the trustee to make the trust corpus produce investment income, the annuity interest in this case is considered to be an ordinary annuity interest, and the standard section 7520 annuity factor may be used to determine the present value of the annuity. In this case, the section 7520 annuity factor would represent the right to receive $1.00 per year for a term of 25 years.

Example 2. Terminal illness. The taxpayer transfers property worth $1,000,000 to a charitable remainder unitrust described in section 664(d)(2) and § 1.664–3. The trust provides for a fixed-percentage 7 percent unitrust benefit (each annual payment is equal to 7 percent of the trust assets as valued at the beginning of each year) to be paid quarterly to an individual beneficiary for life and for the remainder to be distributed to a charitable organization. At the time the trust is created, the individual beneficiary is age 60 and has been diagnosed with an incurable illness and there is at least a 50 percent probability of the individual dying within 1 year. Assuming the presumption in paragraph (b)(3) of this section does not apply, because there is at least a 50 percent probability that this beneficiary will die within 1 year, the standard section 7520 unitrust remainder factor for a person age 60 from the valuation tables may not be used to determine the present value of the charitable remainder interest. Instead, a special unitrust remainder factor must be computed that is based on the section 7520 interest rate and that takes into account the projection of the individual beneficiary's actual life expectancy.

(5) *Additional limitations*. Section 7520 does not apply to the extent as may otherwise be provided by the Commissioner.

(c) *Effective date*. Section 1.7520–3(a) is effective as of May 1, 1989. The provisions of paragraph (b) of this section are effective with respect to transactions after December 13, 1995.

[T.D. 8540, 59 FR 30150, June 10, 1994, as amended by T.D. 8630, 60 FR 63915, Dec. 13, 1995]

§ 1.7520–4 Transitional rules.

(a) *Reliance*. If the valuation date is after April 30, 1989, and before June 10, 1994, a taxpayer can rely on Notice 89–24, 1989–1 C.B. 660, or Notice 89–60, 1989–1 C.B. 700 (See § 601.601(d)(2)(ii)(*b*) of this chapter), in valuing the transferred interest.

(b) *Effective date*. This section is effective as of May 1, 1989.

[T.D. 8540, 59 FR 30150, June 10, 1994]

§ 1.7701(l)–0 Table of contents.

This section lists captions that appear in §§ 1.7701(l)–1 and 1.7701(l)–3:

§ 1.7701(l)–1 Conduit financing arrangements.

§ 1.7701(l)–3 Recharacterizing financing arrangements involving fast-pay stock.

(a) Purpose and scope.
(b) Definitions.
(1) Fast-pay arrangement.
(2) Fast-pay stock.
(i) Defined.
(ii) Determination.
(3) Benefited stock.
(c) Recharacterization of certain fast-pay arrangements.
(1) Scope.
(2) Recharacterization.
(i) Relationship between benefited shareholders and fast-pay shareholders.

(ii) Relationship between benefited shareholders and corporation.
(iii) Relationship between fast-pay shareholders and corporation.
(3) Other rules.
(i) Character of the financing instruments.
(ii) Multiple types of benefited stock.
(iii) Transactions affecting benefited stock.
(A) Sale of benefited stock.
(B) Transactions other than sales.
(iv) Adjustment to basis for amounts accrued or paid in taxable years ending before February 27, 1997.
(d) Prohibition against affirmative use of recharacterization by taxpayers.
(e) Examples.
(f) Reporting requirement.
(1) Filing requirements.
(i) In general.
(ii) Controlled foreign corporation.
(iii) Foreign personal holding company.
(iv) Passive foreign investment company.
(2) Statement.
(g) Effective date.
(1) In general.
(2) Election to limit taxable income attributable to a recharacterized fast-pay arrangement for periods before April 1, 2000.
(i) Limit.
(ii) Adjustment and statement.
(iii) Examples.
(3) Rule to comply with this section.
(4) Reporting requirements.

[T.D. 8853, 65 FR 1313, Jan. 10, 2000]

§ 1.7701(l)–1 Conduit financing arrangements.

Section 7701(l) authorizes the issuance of regulations that recharacterize any multiple-party financing transaction as a transaction directly among any two or more of such parties where the Secretary determines that such recharacterization is appropriate to prevent avoidance of any tax imposed by title 26 of the United States Code.

[T.D. 8611, 60 FR 41015, Aug. 11, 1995, as amended by T.D. 8735, 62 FR 53502, Oct. 14, 1997]

§ 1.7701(l)–3 Recharacterizing financing arrangements involving fast-pay stock.

(a) *Purpose and scope*. This section is intended to prevent the avoidance of tax by persons participating in fast-pay arrangements (as defined in paragraph (b)(1) of this section) and should be interpreted in a manner consistent with this purpose. This section applies to all fast-pay arrangements. Paragraph (c) of this section recharacterizes certain fast-pay arrangements to ensure the participants are taxed in a manner reflecting the economic substance of the arrangements. Paragraph (f) of this section imposes reporting requirements on certain participants.

(b) *Definitions*—(1) *Fast-pay arrangement*. A fast-pay arrangement is any arrangement in which a corporation has fast-pay stock outstanding for any part of its taxable year.

(2) *Fast-pay stock*—(i) *Defined*. Stock is fast-pay stock if it is structured so that dividends (as defined in section 316) paid by the corporation with respect to the stock are economically (in whole or in part) a return of the holder's investment (as opposed to only a return on the holder's investment). Unless clearly demonstrated otherwise, stock is presumed to be fast-pay stock if—

(A) It is structured to have a dividend rate that is reasonably expected to decline (as opposed to a dividend rate that is reasonably expected to fluctuate or remain constant); or

(B) It is issued for an amount that exceeds (by more than a de minimis amount, as determined under the principles of § 1.1273–1(d)) the amount at which the holder can be compelled to dispose of the stock.

(ii) *Determination*. The determination of whether stock is fast-pay stock is based on all the facts and circumstances, including any related agreements such as options or forward contracts. A related agreement includes any direct or indirect agreement or understanding, oral or written, between the holder of the stock and the issuing corporation, or between the holder of the stock and one or more other shareholders in the corporation. To determine if it is fast-pay stock, stock is examined when issued, and, for stock that is not fast-pay stock when issued, when there is a significant modification in the terms of the stock or the related agreements or a significant change in the relevant facts and circumstances. Stock is not fast-pay stock solely because a redemption is treated as a dividend as a result of section 302(d) unless there is a principal

purpose of achieving the same economic and tax effect as a fast-pay arrangement.

(3) *Benefited stock*. With respect to any fast-pay stock, all other stock in the corporation (including other fast-pay stock having any significantly different characteristics) is benefited stock.

(c) *Recharacterization of certain fast-pay arrangements*—(1) *Scope*. This paragraph (c) applies to any fast-pay arrangement—

(i) In which the corporation that has outstanding fast-pay stock is a regulated investment company (RIC) (as defined in section 851) or a real estate investment trust (REIT) (as defined in section 856); or

(ii) If the Commissioner determines that a principal purpose for the structure of the fast-pay arrangement is the avoidance of any tax imposed by the Internal Revenue Code. Application of this paragraph (c)(1)(ii) is at the Commissioner's discretion, and a determination under this paragraph (c)(1)(ii) applies to all parties to the fast-pay arrangement, including transferees.

(2) *Recharacterization*. A fast-pay arrangement described in paragraph (c)(1) of this section is recharacterized as an arrangement directly between the benefited shareholders and the fast-pay shareholders. The inception and resulting relationships of the recharacterized arrangement are deemed to be as follows:

(i) *Relationship between benefited shareholders and fast-pay shareholders*. The benefited shareholders issue financial instruments (the financing instruments) directly to the fast-pay shareholders in exchange for cash equal to the fair market value of the fast-pay stock at the time of issuance (taking into account any related agreements). The financing instruments have the same terms (other than issuer) as the fast-pay stock. Thus, for example, the timing and amount of the payments made with respect to the financing instruments always match the timing and amount of the distributions made with respect to the fast-pay stock.

(ii) *Relationship between benefited shareholders and corporation*. The benefited shareholders contribute to the corporation the cash they receive for issuing the financing instruments. Distributions made with respect to the fast-pay stock are distributions made by the corporation with respect to the benefited shareholders' benefited stock.

(iii) *Relationship between fast-pay shareholders and corporation*. For purposes of determining the relationship between the fast-pay shareholders and the corporation, the fast-pay stock is ignored. The corporation is the paying agent of the benefited shareholders with respect to the financing instruments.

(3) *Other rules*—(i) *Character of the financing instruments*. The character of a financing instrument (for example, stock or debt) is determined under general tax principles and depends on all the facts and circumstances.

(ii) *Multiple types of benefited stock*. If any benefited stock has any significantly different characteristics from any other benefited stock, the recharacterization rules of this paragraph (c) apply among the different types of benefited stock as appropriate to match the economic substance of the fast-pay arrangement.

(iii) Transactions affecting benefited stock—(A) Sale of benefited stock. If one person sells benefited stock to another—

(*1*) In addition to any consideration actually paid and received for the benefited stock, the buyer is deemed to pay and the seller is deemed to receive the amount necessary to terminate the seller's position in the financing instruments at fair market value; and

(*2*) The buyer is deemed to issue financing instruments to the fast-pay shareholders in exchange for the amount necessary to terminate the seller's position in the financing instruments.

(B) *Transactions other than sales*. Except for transactions subject to paragraph (c)(3)(iii)(A) of this section, in the case of any transaction affecting benefited stock, the parties to the transaction must make appropriate adjustments to properly take into account the fast-pay arrangement as characterized under paragraph (c)(2) of this section.

(iv) *Adjustment to basis for amounts accrued or paid in taxable years ending before February 27, 1997.* In the case of a fast-pay arrangement involving amounts accrued or paid in taxable years ending before February 27, 1997, and recharacterized under this paragraph (c), a benefited shareholder must decrease its basis in any benefited stock (as determined under paragraph (c)(2)(ii) of this section) by the amount (if any) that—

(A) Its income attributable to the benefited stock (reduced by deductions attributable to the financing instruments) for taxable years ending before February 27, 1997, computed by recharacterizing the fast-pay arrangement under this paragraph (c) and by treating the financing instruments as debt; exceeds

(B) Its income attributable to such stock for taxable years ending before February 27, 1997, computed without applying the rules of this paragraph (c).

(d) *Prohibition against affirmative use of recharacterization by taxpayers.* A taxpayer may not use the rules of paragraph (c) of this section if a principal purpose for using such rules is the avoidance of any tax imposed by the Internal Revenue Code. Thus, with respect to such taxpayer, the Commissioner may depart from the rules of this section and recharacterize (for all purposes of the Internal Revenue Code) the fast-pay arrangement in accordance with its form or its economic substance. For example, if a foreign person acquires fast-pay stock in a REIT and a principal purpose for acquiring such stock is to reduce United States withholding taxes by applying the rules of paragraph (c) of this section, the Commissioner may, for purposes of determining the foreign person's United States tax consequences (including withholding tax), depart from the rules of paragraph (c) of this section and treat the foreign person as holding fast-pay stock in the REIT.

(e) *Examples.* The following examples illustrate the rules of paragraph (c) of this section:

Example 1. Decline in dividend rate—(i) *Facts.* Corporation X issues 100 shares of A Stock and 100 shares of B Stock for $1,000 per share. By its terms, a share of B Stock is reasonably expected to pay a $110 dividend in years 1 through 10 and a $30 dividend each year thereafter. If X liquidates, the holder of a share of B Stock is entitled to a preference equal to the share's issue price. Otherwise, the B Stock cannot be redeemed at either X's or the shareholder's option.

(ii) *Analysis.* When issued, the B Stock has a dividend rate that is reasonably expected to decline from an annual rate of 11 percent of its issue price to an annual rate of 3 percent of its issue price. Since the B Stock is structured to have a declining dividend rate, the B Stock is fast-pay stock, and the A Stock is benefited stock.

Example 2. Issued at a premium—(i) *Facts.* The facts are the same as in *Example 1* of this paragraph (e) except that a share of B Stock is reasonably expected to pay an annual $110 dividend as long as it is outstanding, and Corporation X has the right to redeem the B Stock for $400 a share at the end of year 10.

(ii) *Analysis.* The B Stock is structured so that the issue price of the B Stock ($1,000) exceeds (by more than a de minimis amount) the price at which the holder can be compelled to dispose of the stock ($400). Thus, the B Stock is fast-pay stock, and the A Stock is benefited stock.

Example 3. Planned section 302(d) redemptions—(i) *Facts.* Corporation L, a subchapter C corporation, issues 220 shares of common stock for $1,000 per share. No other stock is authorized, but L can issue warrants entitling the holder to acquire L common stock for $3,000 per share until such time as L adopts a plan of liquidation. L can adopt a plan of liquidation if approved by 90 percent of its shareholders. Half of L's stock is purchased by Corporation M, and half by Organization N, which is tax exempt. At the time of purchase, M and N agree that for a period of ten years L will annually redeem (and N will tender) ten shares of stock in exchange for $12,100 and ten warrants. It is anticipated that, under sections 302 and 301, the annual payment to N will be a distribution of property that is a dividend.

(ii) *Analysis.* Considering all the facts and circumstances, including the agreement between M and N, L's redemption of N's stock is undertaken with a principal purpose of achieving the same economic and tax effect as a fast-pay arrangement. Thus, N's stock is fast-pay stock, M's stock is benefited stock, and the parties have entered into a fast-pay arrangement. Because L is neither a RIC nor a REIT, whether this fast-pay arrangement is recharacterized under paragraph (c) of this section depends on whether the Commissioner determines, under paragraph (c)(1)(ii) of this section, that a principal purpose for the structure of the fast-pay arrangement is the avoidance of any tax imposed by the Internal Revenue Code.

Example 4. Recharacterization illustrated—(i) *Facts.* On formation, REIT Y issues 100 shares of C Stock and 100 shares of D Stock for $1,000 per share. By its terms, a share of D Stock is reasonably expected to pay a $110 dividend in years 1 through 10 and a $30 dividend each year thereafter. In years 1 through 10, persons holding a majority of the D Stock must consent before Y may take any action that would result in Y liquidating or dissolving, merging or consolidating, losing its REIT status, or selling substantially all of its assets. Thereafter, Y may take these actions without consent so long as the D Stock shareholders receive $400 in exchange for their D Stock.

(ii) *Analysis.* When issued, the D Stock has a dividend rate that is reasonably expected to decline from an annual rate of 11 percent of its issue price to an annual rate of 3 percent of its issue price. In addition, the $1,000 issue price of a share of D Stock exceeds the price at which the shareholder can be compelled to dispose of the stock ($400). Thus, the D Stock is fast-pay stock, and the C Stock is benefited stock. Because Y is a REIT, the fast-pay arrangement is recharacterized under paragraph (c) of this section.

(iii) *Recharacterization.* The fast-pay arrangement is recharacterized as follows:

(A) Under paragraph (c)(2)(i) of this section, the C Stock shareholders are treated as issuing financing instruments to the D Stock shareholders in exchange for $100,000 ($1,000, the fair market value of each share of D Stock, multiplied by 100, the number of shares).

(B) Under paragraph (c)(2)(ii) of this section, the C Stock shareholders are treated as contributing $200,000 to Y (the $100,000 received for the financing instruments, plus the $100,000 actually paid for the C Stock) in exchange for the C Stock.

(C) Under paragraph (c)(2)(ii) of this section, each distribution with respect to the D Stock is treated as a distribution with respect to the C Stock.

(D) Under paragraph (c)(2)(iii) of this section, the C Stock shareholders are treated as making payments with respect to the financing instruments, and Y is treated as the paying agent of the financing instruments for the C Stock shareholders.

Example 5. Transfer of benefited stock illustrated—(i) *Facts.* The facts are the same as in Example 4 of this paragraph (e). Near the end of year 5, a person holding one share of C Stock sells it for $1,300. The buyer is unrelated to REIT Y or to any of the D Stock shareholders. At the time of the sale, the amount needed to terminate the seller's position in the financing instruments at fair market value is $747.

(ii) *Benefited shareholder's treatment on sale.* Under paragraph (c)(3)(iii)(A) of this section, the seller's amount realized is $2,047 ($1,300, the amount actually received, plus $747, the amount necessary to terminate the seller's position in the financing instruments at fair market value). The seller's gain on the sale of the common stock is $47 ($2,047, the amount realized, minus $2,000, the seller's basis in the common stock). The seller has no income or deduction with respect to terminating its position in the financing instruments.

(iii) *Buyer's treatment on purchase.* Under paragraph (c)(3)(iii)(A) of this section, the buyer's basis in the share of D Stock is $2,047 ($1,300, the amount actually paid, plus $747, the amount needed to terminate the seller's position in the financing instruments at fair market value). Under paragraph (c)(3)(iii)(B) of this section, simultaneous with the sale, the buyer is treated as issuing financing instruments to the fast-pay shareholders in exchange for $747, the amount necessary to terminate the seller's position in the financing instruments at fair market value.

Example 6. Fast-pay arrangement involving amounts accrued or paid in a taxable year ending before February 27, 1997—(i) *Facts.* Y is a calendar year taxpayer. In June 1996, Y acquires shares of REIT T benefited stock for $15,000. In December 1996, Y receives dividends of $100. Under the recharacterization rules of paragraph (c)(2) of this section, Y's 1996 income attributable to the benefited stock is $1,200, Y's 1996 deduction attributable to the financing instruments is $500, and Y's basis in the benefited stock is $25,000.

(ii) *Analysis.* Under paragraph (c)(3)(iv) of this section, Y's basis in the benefited stock is reduced by $600. This is the amount by which Y's 1996 income from the fast-pay arrangement as recharacterized under this section ($1,200 of income attributable to the benefited stock less $500 of deductions attributable to the financing instruments), exceeds Y's 1996 income from the fast-pay arrangement as not recharacterized under this section ($100 of income attributable to the benefited stock). Thus, in 1997 when the fast-pay arrangement is recharacterized, Y's basis in the benefited stock is $24,400.

(f) *Reporting requirement*—(1) *Filing requirements*—(i) *In general.* A corporation that has fast-pay stock outstanding at any time during the taxable year must attach the statement described in paragraph (f)(2) of this section to its federal income tax return for such taxable year. This paragraph (f)(1)(i) does not apply to a corporation described in paragraphs (f)(1)(ii), (iii), or (iv) of this section.

(ii) *Controlled foreign corporation.* In the case of a controlled foreign corporation (CFC), as defined in section

957, that has fast-pay stock outstanding at any time during its taxable year (during which time it was a CFC), each controlling United States shareholder (within the meaning of § 1.964–1(c)(5)) must attach the statement described in paragraph (f)(2) of this section to the shareholder's Form 5471 for the CFC's taxable year. The provisions of section 6038 and the regulations under section 6038 apply to any statement required by this paragraph (f)(1)(ii).

(iii) *Foreign personal holding company*. In the case of a foreign personal holding company (FPHC), as defined in section 552, that has fast-pay stock outstanding at any time during its taxable year (during which time it was a FPHC), each United States citizen or resident who is an officer, director, or 10-percent shareholder (within the meaning of section 6035(e)(1)) of such FPHC must attach the statement described in paragraph (f)(2) of this section to his or her Form 5471 for the FPHC's taxable year. The provisions of sections 6035 and 6679 and the regulations under sections 6035 and 6679 apply to any statement required by this paragraph (f)(1)(iii).

(iv) *Passive foreign investment company*. In the case of a passive foreign investment company (PFIC), as defined in section 1297, that has fast-pay stock outstanding at any time during its taxable year (during which time it was a PFIC), each shareholder that has elected (under section 1295) to treat the PFIC as a qualified electing fund and knows or has reason to know that the PFIC has outstanding fast-pay stock must attach the statement described in paragraph (f)(2) of this section to the shareholder's Form 8621 for the PFIC's taxable year. Each shareholder owning 10 percent or more of the shares of the PFIC (by vote or value) is presumed to know that the PFIC has issued fast-pay stock. The provisions of sections 1295(a)(2) and 1298(f) and the regulations under those sections (including § 1.1295–1T(f)(2)) apply to any statement required by this paragraph (f)(1)(iv).

(2) *Statement*. The statement required under this paragraph (f) must say, ''This fast-pay stock disclosure statement is required by § 1.7701(l)–3(f) of the income tax regulations.'' The statement must also identify the corporation that has outstanding fast-pay stock and must contain the date on which the fast-pay stock was issued, the terms of the fast-pay stock, and (to the extent the filing person knows or has reason to know such information) the names and taxpayer identification numbers of the shareholders of any stock that is not traded on an established securities market (as described in § 1.7704–1(b)).

(g) *Effective date*—(1) *In general*. Except as provided in paragraph (g)(4) of this section (relating to reporting requirements), this section applies to taxable years ending after February 26, 1997. Thus, all amounts accrued or paid during the first taxable year ending after February 26, 1997, are subject to this section.

(2) *Election to limit taxable income attributable to a recharacterized fast-pay arrangement for periods before April 1, 2000*—(i) *Limit*. For periods before April 1, 2000, provided the shareholder recharacterizes the fast-pay arrangement consistently for all such periods, a shareholder may limit its taxable income attributable to a fast-pay arrangement recharacterized under paragraph (c) of this section to the taxable income that results if the fast-pay arrangement is recharacterized under either—

(A) Notice 97–21, 1997–1 C.B. 407, see § 601.601(d)(2) of this chapter; or

(B) Paragraph (c) of this section, computed by assuming the financing instruments are debt.

(ii) *Adjustment and statement*. A shareholder that limits its taxable income to the amount determined under paragraph (g)(2)(i)(A) of this section must include as an adjustment to taxable income the excess, if any, of the amount determined under paragraph (g)(2)(i)(B) of this section, over the amount determined under paragraph (g)(2)(i)(A) of this section. This adjustment to taxable income must be made in the shareholder's first taxable year that includes April 1, 2000. A shareholder to which this paragraph (g)(2)(ii) applies must include a statement in its books and records identifying each fast-pay arrangement for which an adjustment must be made and providing the

amount of the adjustment for each such fast-pay arrangement.

(iii) *Examples*. The following examples illustrate the rules of this paragraph (g)(2). For purposes of these examples, assume that a shareholder may limit its taxable income under this paragraph (g)(2) for periods before January 1, 2000.

Example 1. Fast-pay arrangement recharacterized under Notice 97–21; REIT holds third-party debt—(i) *Facts*. (A) REIT Y is formed on January 1, 1997, at which time it issues 1,000 shares of fast-pay stock and 1,000 shares of benefited stock for $100 per share. Y and all of its shareholders are U.S. persons and have calendar taxable years. All shareholders of Y have elected to accrue market discount based on a constant interest rate, to include the market discount in income as it accrues, and to amortize bond premium.

(B) For years 1 through 5, the fast-pay stock has an annual dividend rate of $17 per share ($17,000 for all fast-pay stock); in later years, the fast-pay stock has an annual dividend rate of $1 per share ($1,000 for all fast-pay stock). At the end of year 5, and thereafter, a share of fast-pay stock can be acquired by Y in exchange for $50 ($50,000 for all fast-pay stock).

(C) On the day Y is formed, it acquires a five-year mortgage note (the note) issued by an unrelated third party for $200,000. The note provides for annual interest payments on December 31 of $18,000 (a coupon interest rate of 9.00 percent, compounded annually), and one payment of principal at the end of 5 years. The note can be prepaid, in whole or in part, at any time.

(ii) *Recharacterization under Notice 97–21*—(A) *In general*. One way to recharacterize the fast-pay arrangement under Notice 97–21 is to treat the fast-pay shareholders and the benefited shareholders as if they jointly purchased the note from the issuer with the understanding that over the five-year term of the note the benefited shareholders would use their share of the interest to buy (on a dollar-for-dollar basis) the fast-pay shareholders' portion of the note. The benefited shareholders' and the fast-pay shareholders' yearly taxable income under Notice 97–21 can then be calculated after determining their initial portions of the note and whether those initial portions are purchased at a discount or premium.

(B) *Determining initial portions of the debt instrument*. The fast-pay shareholders' and the benefited shareholders' initial portions of the note can be determined by comparing the present values of their expected cash flows. As a group, the fast-pay shareholders expect to receive cash flows of $135,000 (five annual payments of $17,000, plus a final payment of $50,000). As a group, the benefited shareholders expect to receive cash flows of $155,000 (five annual payments of $1,000, plus a final payment of $150,000). Using a discount rate equal to the yield to maturity (as determined under §1.1272–1(b)(1)(i)) of the mortgage note (9.00 percent, compounded annually), the present value of the fast-pay shareholders' cash flows is $98,620, and the present value of the benefited shareholders' cash flows is $101,380. Thus, the fast-pay shareholders initially acquire 49 percent of the note at a $1,380 premium (that is, they paid $100,000 for $98,620 of principal in the note). The benefited shareholders initially acquire 51 percent of the note at a $1,380 discount (that is, they paid $100,000 for $101,380 of principal in the note). Under section 171, the fast-pay shareholders' premium is amortizable based on their yield in their initial portion of the note (8.574 percent, compounded annually). The benefited shareholders' discount accrues based on the yield in their initial portion of the note (9.353 percent, compounded annually).

(C) *Taxable income under Notice 97–21*—(*1*) *Fast-pay shareholders*. Under Notice 97–21, the fast-pay shareholders compute their taxable income attributable to the fast-pay arrangement for periods before January 1, 2000, by subtracting the amortizable premium from the accrued interest on the fast-pay shareholders' portion of the note. For purposes of paragraph (g)(2)(i)(A) of this section, the fast-pay shareholders' taxable income as a group is as follows:

Taxable period	Interest income	Amortizable premium	Taxable income
1/1/97–12/31/97	$8,876	($302)	$8,574
1/1/98–12/31/98	8,145	(293)	7,852
1/1/99–12/31/99	7,348	(281)	7,067
Total	24,369	(876)	23,493

(*2*) *Benefited shareholders*. Under Notice 97–21, the benefited shareholders compute their taxable income attributable to the fast-pay arrangement for periods before January 1, 2000, by adding the accrued discount to the accrued interest on the benefited shareholders' portion of the note. For purposes of paragraph (g)(2)(i)(A) of this section, the

benefited shareholders' taxable income as a group is as follows:

Taxable period	Interest income	Accrued discount	Taxable income
1/1/97–12/31/97	$9,124	$229	$9,353
1/1/98–12/31/98	9,855	251	10,106
1/1/99–12/31/99	10,652	274	10,926
Total	29,631	754	30,385

(iii) *Taxable income under the recharacterization of this section*—(A) *Fast-pay shareholders.* Under paragraphs (c) and (g)(2)(i)(B) of this section, the fast-pay shareholders' taxable income attributable to the fast-pay arrangement for periods before January 1, 2000, is the interest deemed paid on the financing instruments. For purposes of paragraph (g)(2)(i)(B) of this section, the fast-pay shareholders' taxable income as a group is as follows:

Taxable period	Taxable income
1/1/97–12/31/97	$8,574
1/1/98–12/31/98	7,852
1/1/99–12/31/99	7,067
Total	23,493

(B) *Benefited shareholders.* Under paragraphs (c) and (g)(2)(i)(B) of this section, the benefited shareholders compute their taxable income attributable to the fast-pay arrangement for periods before January 1, 2000, by subtracting the interest deemed paid on the financing instruments from the dividends actually and deemed paid on the benefited stock. For purposes of paragraph (g)(2)(i)(B) of this section, the benefited shareholders' taxable income as a group is as follows:

Taxable period	Dividends paid on benefited stock	Interest paid on financing instruments	Taxable income
1/1/97–12/31/97	$18,000	($8,574)	$9,426
1/1/98–12/31/98	18,000	(7,852)	10,148
1/1/99–12/31/99	18,000	(7,067)	10,933
Total	54,000	(23,493)	30,507

(iv) *Limit on taxable income under paragraph (g)(2)(i) of this section*—(A) *Fast-pay shareholders.* For periods before January 1, 2000, the fast-pay shareholders have the same taxable income under the recharacterization of Notice 97–21 and paragraph (g)(2)(i)(A) of this section ($23,493) as they have under the recharacterization of paragraphs (c) and (g)(2)(i)(B) of this section ($23,493). Thus, under paragraph (g)(2)(i) of this section, the fast-pay shareholders may limit their taxable income attributable to the fast-pay arrangement for periods before January 1, 2000, to $23,493 (as a group).

(B) *Benefited shareholders.* For periods before January 1, 2000, the benefited shareholders have taxable income attributable to the fast-pay arrangement of $30,385 under the recharacterization of Notice 97–21 and paragraph (g)(2)(i)(A) of this section, and taxable income of $30,507 under the recharacterization of paragraphs (c) and (g)(2)(i)(B) of this section. Thus, under paragraph (g)(2)(i) of this section, the benefited shareholders may limit their taxable income attributable to the fast-pay arrangement for periods before January 1, 2000, to either $30,385 (as a group) or $30,507 (as a group).

(v) *Adjustment to taxable income under paragraph (g)(2)(ii) of this section.* Under paragraph (g)(2)(ii) of this section, any benefited shareholder that limited its taxable income to the amount determined under paragraph (g)(2)(i)(A) of this section must include as an adjustment to taxable income the excess, if any, of the amount determined under paragraph (g)(2)(i)(B) of this section, over the amount determined under paragraph (g)(2)(i)(A) of this section. If all benefited shareholders limited their taxable income to the amount determined under paragraph (g)(2)(i)(A) of this section, then as a group their adjustment to income is $122 ($30,507, minus $30,385). Each shareholder must include its adjustment in income for the taxable year that includes January 1, 2000.

Example 2. REIT holds debt issued by a benefited shareholder—(i) *Facts.* The facts are the same as in *Example 1* of this paragraph (g)(2) except that corporation Z holds 800 shares (80

percent) of the benefited stock, and Z, instead of a third party, issues the mortgage note acquired by Y.

(ii) *Recharacterization under Notice 97–21.* Because Y holds a debt instrument issued by Z, the fast-pay arrangement is recharacterized under Notice 97–21 as an arrangement in which Z issued one or more instruments directly to the fast-pay shareholders and the other benefited shareholders.

(A) *Fast-pay shareholders.* Consistent with this recharacterization, Z is treated as issuing a debt instrument to the fast-pay shareholders for $100,000. The debt instrument provides for five annual payments of $17,000 and an additional payment of $50,000 in year five. Thus, the debt instrument's yield to maturity is 8.574 percent per annum, compounded annually.

(B) *Benefited shareholders.* Z is also treated as issuing a debt instrument to the other benefited shareholders for $20,000 (200 shares multiplied by $100, or 20 percent of the $100,000 paid to Y by the benefited shareholders as a group). This debt instrument provides for five annual payments of $200 and an additional payment of $30,000 in year five. The debt instrument's yield to maturity is 9.304 percent per annum, compounded annually.

(C) *Issuer's interest expense under Notice 97–21.* Under Notice 97–21, Z's interest expense attributable to the fast-pay arrangement for periods before January 1, 2000, equals the interest accrued on the debt instrument held by the fast-pay shareholders, plus the interest accrued on the debt instrument held by the benefited shareholders other than Z. For purposes of paragraph (g)(2)(i)(A) of this section, Z's interest expense is as follows:

Taxable period	Accrued interest fast-pay shareholders	Accrued interest other benefited shareholders	Total interest expense
1/1/97–12/31/97	($8,574)	($1,861)	($10,435)
1/1/98–12/31/98	(7,852)	(2,015)	(9,867)
1/1/99–12/31/99	(7,067)	(2,184)	(9,251)
Total	(23,493)	(6,060)	(29,553)

(iii) *Recharacterization under this section.* Under paragraphs (c) and (g)(2)(i)(B) of this section, Z's taxable income attributable to the fast-pay arrangement for periods before January 1, 2000, equals Z's share of the dividends actually and deemed paid on the benefited stock (80 percent of the outstanding benefited stock), reduced by the sum of the interest accrued on the note held by Y and the interest accrued on the financing instruments deemed to have been issued by Z. For purposes of paragraph (g)(2)(i)(B) of this section, Z's taxable income is as follows:

Taxable period	Dividends benefited stock	Accrued interest on debt held by Y	Accrued interest financing instruments	Taxable expense
1/1/97–12/31/97	$14,400	($18,000)	($6,859)	($10,459)
1/1/98–12/31/98	14,400	(18,000)	(6,281)	(9,881)
1/1/99–12/31/99	14,400	(18,000)	(5,654)	(9,254)
Total	43,200	(54,000)	(18,794)	(29,594)

(iv) *Limit on taxable income under this paragraph (g)(2).* For periods before January 1, 2000, Z has a taxable loss attributable to the fast-pay arrangement of $29,553 under the recharacterization of Notice 97–21 and paragraph (g)(2)(i)(A) of this section, and a taxable loss of $29,594 under the recharacterization of paragraphs (c) and (g)(2)(i)(B) of this section. Thus, under paragraph (g)(2)(i) of this section, Z may report a taxable loss attributable to the fast-pay arrangement for periods before January 1, 2000, of either $29,553 or $29,594. Under paragraph (g)(2)(ii), Z has no adjustment to its taxable income for its taxable year that includes January 1, 2000.

(3) *Rule to comply with this section.* To comply with this section for each taxable year in which it failed to do so, a taxpayer should file an amended return. For taxable years ending before Janaury 10, 2000, a taxpayer that has complied with Notice 97–21, 1997–1 C.B. 407 (see §601.601(d)(2) of this chapter), for all such taxable years is considered to have complied with this section and

limited its taxable income under paragraph (g)(2)(i)(A) of this section.

(4) *Reporting requirements.* The reporting requirements of paragraph (f) of this section apply to taxable years (of the person required to file the statement) ending after Janaury 10, 2000.

[T.D. 8853, 65 FR 1313, Jan. 10, 2000; 65 FR 16317, Mar. 28, 2000]

§ 1.7702B–1 Consumer protection provisions.

(a) *In general.* Under sections 7702B(b)(1)(F), 7702B(g), and 4980C, qualified long-term care insurance contracts and issuers of those contracts are required to satisfy certain provisions of the Long-Term Care Insurance Model Act (Model Act) and Long-Term Care Insurance Model Regulation (Model Regulation) promulgated by the National Association of Insurance Commissioners (NAIC), as adopted as of January 1993. The requirements for qualified long-term care insurance contracts under section 7702B(b)(1)(F) and (g) relate to guaranteed renewal or noncancellability, prohibitions on limitations and exclusions, extension of benefits, continuation or conversion of coverage, discontinuance and replacement of policies, unintentional lapse, disclosure, prohibitions against postclaims underwriting, minimum standards, inflation protection, prohibitions against pre-existing conditions exclusions and probationary periods, and prior hospitalization. The requirements for qualified long-term care insurance contracts under section 4980C relate to application forms and replacement coverage, reporting requirements, filing requirements for marketing, standards for marketing, appropriateness of recommended purchase, standard format outline of coverage, delivery of a shopper's guide, right to return, outline of coverage, certificates under group plans, policy summary, monthly reports on accelerated death benefits, and incontestability period.

(b) *Coordination with State requirements*—(1) *Contracts issued in a State that imposes more stringent requirements.* If a State imposes a requirement that is more stringent than the analogous requirement imposed by section 7702B(g) or 4980C, then, under section 4980C(f), compliance with the more stringent requirement of State law is considered compliance with the parallel requirement of section 7702B(g) or 4980C. The principles of paragraph (b)(3) of this section apply to any case in which a State imposes a requirement that is more stringent than the analogous requirement imposed by section 7702B(g) or 4980C (as described in this paragraph (b)(1)), but in which there has been a failure to comply with that State requirement.

(2) *Contracts issued in a State that has adopted the model provisions.* If a State imposes a requirement that is the same as the parallel requirement imposed by section 7702B(g) or 4980C, compliance with that requirement of State law is considered compliance with the parallel requirement of section 7702B(g) or 4980C, and failure to comply with that requirement of State law is considered failure to comply with the parallel requirement of section 7702B(g) or 4980C.

(3) *Contracts issued in a State that has not adopted the model provisions or more stringent requirements.* If a State has not adopted the Model Act, the Model Regulation, or a requirement that is the same as or more stringent than the analogous requirement imposed by section 7702B(g) or 4980C, then the language, caption, format, and content requirements imposed by sections 7702B(g) and 4980C with respect to contracts, applications, outlines of coverage, policy summaries, and notices will be considered satisfied for a contract subject to the law of that State if the language, caption, format, and content are substantially similar to those required under the parallel provision of the Model Act or Model Regulation. Only nonsubstantive deviations are permitted in order for language, caption, format, and content to be considered substantially similar to the requirements of the Model Act or Model Regulation.

(c) *Effective date.* This section applies with respect to contracts issued after December 10, 1999.

[T.D. 8792, 63 FR 68186, Dec. 10, 1998]

§ 1.7702B–2 Special rules for pre-1997 long-term care insurance contracts.

(a) *Scope.* The definitions and special provisions of this section apply solely for purposes of determining whether an

insurance contract (other than a qualified long-term care insurance contract described in section 7702B(b) and any regulations issued thereunder) is treated as a qualified long-term care insurance contract for purposes of the Internal Revenue Code under section 321(f)(2) of the Health Insurance Portability and Accountability Act of 1996 (Public Law 104–191).

(b) *Pre-1997 long-term care insurance contracts*—(1) *In general*. A pre-1997 long-term care insurance contract is treated as a qualified long-term care insurance contract, regardless of whether the contract satisfies section 7702B(b) and any regulations issued thereunder.

(2) *Pre-1997 long-term care insurance contract defined*. A pre-1997 long-term care insurance contract is any insurance contract with an issue date before January 1, 1997, that met the long-term care insurance requirements of the State in which the contract was sitused on the issue date. For this purpose, the long-term care insurance requirements of the State are the State laws (including statutory and administrative law) that are intended to regulate insurance coverage that constitutes ''long-term care insurance'' (as defined in section 4 of the National Association of Insurance Commissioners (NAIC) Long-Term Care Insurance Model Act, as in effect on August 21, 1996), regardless of the terminology used by the State in describing the insurance coverage.

(3) *Issue date of a contract*—(i) *In general*. Except as otherwise provided in this paragraph (b)(3), the issue date of a contract is the issue date assigned to the contract by the insurance company. In no event is the issue date earlier than the date the policyholder submitted a signed application for coverage to the insurance company. If the period between the date the signed application is submitted to the insurance company and the date coverage under which the contract actually becomes effective is substantially longer than under the insurance company's usual business practice, then the issue date is the later of the date coverage under which the contract becomes effective or the issue date assigned to the contract by the insurance company. A policyholder's right to return a contract within a free-look period following delivery for a full refund of any premiums paid is not taken into account in determining the contract's issue date.

(ii) *Special rule for group contracts*. The issue date of a group contract (including any certificate issued thereunder) is the date on which coverage under the group contract becomes effective.

(iii) *Exchange of contract or certain changes in a contract treated as a new issuance*. For purposes of this paragraph (b)(3)—

(A) A contract issued in exchange for an existing contract after December 31, 1996, is considered a contract issued after that date;

(B) Any change described in paragraph (b)(4) of this section is treated as the issuance of a new contract with an issue date no earlier than the date the change goes into effect; and

(C) If a change described in paragraph (b)(4) of this section occurs with regard to one or more, but fewer than all, of the certificates evidencing coverage under a group contract, then the insurance coverage under the changed certificates is treated as coverage under a newly issued group contract (and the insurance coverage provided by any unchanged certificate continues to be treated as coverage under the original group contract).

(4) *Changes treated as the issuance of a new contract*—(i) *In general*. For purposes of paragraph (b)(3) of this section, except as provided in paragraph (b)(4)(ii) of this section, the following changes are treated as the issuance of a new contract—

(A) A change in the terms of a contract that alters the amount or timing of an item payable by either the policyholder (or certificate holder), the insured, or the insurance company;

(B) A substitution of the insured under an individual contract; or

(C) A change (other than an immaterial change) in the contractual terms, or in the plan under which the contract was issued, relating to eligibility for membership in the group covered under a group contract.

(ii) *Exceptions*. For purposes of this paragraph (b)(4), the following changes

are not treated as the issuance of a new contract—

(A) A policyholder's exercise of any right provided under the terms of the contract as in effect on December 31, 1996, or a right required by applicable State law to be provided to the policyholder;

(B) A change in the mode of premium payment (for example, a change from monthly to quarterly premiums);

(C) In the case of a policy that is guaranteed renewable or noncancellable, a classwide increase or decrease in premiums;

(D) A reduction in premiums due to the purchase of a long-term care insurance contract by a family member of the policyholder;

(E) A reduction in coverage (with a corresponding reduction in premiums) made at the request of a policyholder;

(F) A reduction in premiums as a result of extending to an individual policyholder a discount applicable to similar categories of individuals pursuant to a premium rate structure that was in effect on December 31, 1996, for the issuer's pre-1997 long-term care insurance contracts of the same type;

(G) The addition, without an increase in premiums, of alternative forms of benefits that may be selected by the policyholder;

(H) The addition of a rider (including any similarly identifiable amendment) to a pre-1997 long-term care insurance contract in any case in which the rider, if issued as a separate contract of insurance, would itself be a qualified long-term care insurance contract under section 7702B and any regulations issued thereunder (including the consumer protection provisions in section 7702B(g) to the extent applicable to the addition of a rider);

(I) The deletion of a rider or provision of a contract that prohibited coordination of benefits with Medicare (often referred to as an HHS (Health and Human Services) rider);

(J) The effectuation of a continuation or conversion of coverage right that is provided under a pre-1997 group contract and that, in accordance with the terms of the contract as in effect on December 31, 1996, provides for coverage under an individual contract following an individual's ineligibility for continued coverage under the group contract; and

(K) The substitution of one insurer for another insurer in an assumption reinsurance transaction.

(5) *Examples*. The following examples illustrate the principles of this paragraph (b):

Example 1. (i) On December 3, 1996, A, an individual, submits a signed application to an insurance company to purchase a nursing home contract that meets the long-term care insurance requirements of the State in which the contract is sitused. The insurance company decides on December 20, 1996, that it will issue the contract, and assigns December 20, 1996, as the issue date for the contract. Under the terms of the contract, A's insurance coverage becomes effective on January 1, 1997. The company delivers the contract to A on January 3, 1997. A has the right to return the contract within 15 days following delivery for a refund of all premiums paid.

(ii) Under paragraph (b)(3)(i) of this section, the issue date of the contract is December 20, 1996. Thus, the contract is a pre-1997 long-term care insurance contract that is treated as a qualified long-term care insurance contract.

Example 2. (i) The facts are the same as in *Example 1*, except that the insurance coverage under the contract does not become effective until March 1, 1997. Under the insurance company's usual business practice, the period between the date of the application and the date the contract becomes effective is 30 days or less.

(ii) Under paragraph (b)(3)(i) of this section, the issue date of the contract is March 1, 1997. Thus, the contract is not a pre-1997 long-term care insurance contract, and, accordingly, the contract must meet the requirements of section 7702B(b) and any regulations issued thereunder to be a qualified long-term care insurance contract.

Example 3. (i) B, an individual, is the policyholder under a long-term care insurance contract purchased in 1995. On June 15, 2000, the insurance coverage and premiums under the contract are increased by agreement between B and the insurance company.

(ii) Under paragraph (b)(4)(i)(A) of this section, a change in the terms of a contract that alters the amount or timing of an item payable by the policyholder or the insurance company is treated as the issuance of a new contract. Thus, B's coverage is treated as coverage under a contract issued on June 15, 2000, and, accordingly, the contract must meet the requirements of section 7702B(b) and any regulations issued thereunder in order to be a qualified long-term care insurance contract.

Example 4. (i) C, an individual, is the policyholder under a long-term care insurance contract purchased in 1994. At that time and through December 31, 1996, the contract met the long-term care insurance requirements of the State in which the contract was sitused. In 1996, the policy was amended to add a provision requiring the policyholder to be offered the right to increase dollar limits for inflation every three years (without the policyholder being required to pass a physical or satisfy any other underwriting requirements). During 2002, C elects to increase the amount of insurance coverage (with a resulting premium increase) pursuant to the inflation provision.

(ii) Under paragraph (b)(4)(ii)(A) of this section, an increase in the amount of insurance coverage at the election of the policyholder (without the insurance company's consent and without underwriting or other limitations on the policyholder's rights) pursuant to a pre-1997 inflation provision is not treated as the issuance of a new contract. Thus, C's contract continues to be a pre-1997 long-term care insurance contract that is treated as a qualified long-term care insurance contract.

(c) *Effective date.* This section is applicable January 1, 1999.

[T.D. 8792, 63 FR 68187, Dec. 10, 1998]

§ 1.7703–1 Determination of marital status.

(a) *General rule.* The determination of whether an individual is married shall be made as of the close of his taxable year unless his spouse dies during his taxable year, in which case such determination shall be made as of the time of such death; and, except as provided in paragraph (b) of this section, an individual shall be considered as married even though living apart from his spouse unless legally separated under a decree of divorce or separate maintenance. The provisions of this paragraph may be illustrated by the following examples:

Example (1). Taxpayer A and his wife B both make their returns on a calendar year basis. In July 1954, they enter into a separation agreement and thereafter live apart, but no decree of divorce or separate maintenance is issued until March 1955. If A itemizes and claims his actual deductions on his return for the calendar year 1954, B may not elect the standard deduction on her return since B is considered as married to A (although permanently separated by agreement) on the last day of 1954.

Example (2). Taxpayer A makes his returns on the basis of a fiscal year ending June 30. His wife B makes her returns on the calendar year basis. A died in October 1954. In such case, since A and B were married as of the date of death, B may not elect the standard deduction for the calendar year 1954 if the income of A for the short taxable year ending with the date of his death is determined without regard to the standard deduction.

(b) *Certain married individuals living apart.* (1) For purposes of Part IV of Subchapter B of Chapter 1 of the Code, an individual is not considered as married for taxable years beginning after December 31, 1969, if (i) such individual is married (within the meaning of paragraph (a) of this section) but files a separate return; (ii) such individual maintains as his home a household which constitutes for more than one-half of the taxable year the principal place of abode of a dependent *(a)* who (within the meaning of section 152 and the regulations thereunder) is a son, stepson, daughter, or stepdaughter of the individual, and *(b)* with respect to whom such individual is entitled to a deduction for the taxable year under section 151; (iii) such individual furnishes over half of the cost of maintaining such household during the taxable year; and (iv) during the entire taxable year such individual's spouse is not a member of such household.

(2) For purposes of subparagraph (1)(ii)*(a)* of this paragraph, a legally adopted son or daughter of an individual, a child (described in paragraph (c)(2) of § 1.152–2) who is a member of an individual's household if placed with such individual by an authorized placement agency (as defined in paragraph (c)(2) of § 1.152–2) for legal adoption by such individual, or a foster child (described in paragraph (c)(4) of § 1.152–2) of an individual if such child satisfies the requirements of section 152(a)(9) of the Code and paragraph (b) of § 1.152–1 with respect to such individual, shall be treated as a son or daughter of such individual by blood.

(3) For purposes of subparagraph (1)(ii) of this paragraph, the household must actually constitute the home of the individual for his taxable year. However, a physical change in the location of such home will not prevent an individual from qualifying for the treatment provided in subparagraph (1)

of this paragraph. It is not sufficient that the individual maintain the household without being its occupant. The individual and the dependent described in subparagraph (1)(ii)*(a)* of this paragraph must occupy the household for more than one-half of the taxable year of the individual. However, the fact that such dependent is born or dies within the taxable year will not prevent an individual from qualifying for such treatment if the household constitutes the principal place of abode of such dependent for the remaining or preceding part of such taxable year. The individual and such dependent will be considered as occupying the household during temporary absences from the household due to special circumstances. A nonpermanent failure to occupy the common abode by reason of illness, education, business, vacation, military service, or a custody agreement under which a child or stepchild is absent for less than 6 months in the taxable year of the taxpayer, shall be considered a temporary absence due to special circumstances. Such absence will not prevent an individual from qualifying for the treatment provided in subparagraph (1) of this paragraph if (i) it is reasonable to assume that such individual or the dependent will return to the household and (ii) such individual continues to maintain such household or a substantially equivalent household in anticipation of such return.

(4) An individual shall be considered as maintaining a household only if he pays more than one-half of the cost thereof for his taxable year. The cost of maintaining a household shall be the expenses incurred for the mutual benefit of the occupants thereof by reason of its operation as the principal place of abode of such occupants for such taxable year. The cost of maintaining a household shall not include expenses otherwise incurred. The expenses of maintaining a household include property taxes, mortgage interest, rent, utility charges, upkeep and repairs, property insurance, and food consumed on the premises. Such expenses do not include the cost of clothing, education, medical treatment, vacations, life insurance, and transportation. In addition, the cost of maintaining a household shall not include any amount which represents the value of services rendered in the household by the taxpayer or by a dependent described in subparagraph (1)(ii)*(a)* of this paragraph.

(5) For purposes of subparagraph (1)(iv) of this paragraph, an individual's spouse is not a member of the household during a taxable year if such household does not constitute such spouse's place of abode at any time during such year. An individual's spouse will be considered to be a member of the household during temporary absences from the household due to special circumstances. A nonpermanent failure to occupy such household as his abode by reason of illness, education, business, vacation, or military service shall be considered a mere temporary absence due to special circumstances.

(6) The provisions of this paragraph may be illustrated by the following example:

Example. Taxpayer A, married to B at the close of the calendar year 1971, his taxable year, is living apart from B, but A is not legally separated from B under a decree of divorce or separate maintenance. A maintains a household as his home which is for 7 months of 1971 the principal place of abode of C, his son, with respect to whom A is entitled to a deduction under section 151. A pays for more than one-half the cost of maintaining that household. At no time during 1971 was B a member of the household occupied by A and C. A files a separate return for 1971. Under these circumstances, A is considered as not married under section 143(b) for purposes of the standard deduction. Even though A is married and files a separate return A may claim for 1971 as his standard deduction the larger of the low income allowance up to a maximum of $1,050 consisting of both the basic allowance and additional allowance (rather than the basic allowance only subject to the $500 limitation applicable to a separate return of a married individual) or the percentage standard deduction subject to the $1,500 limitation (rather than the $750 limitation applicable to a separate return of a married individual). See §1.141–1. For purposes of the provisions of part IV of subchapter B of chapter 1 of the Code and the regulations thereunder, A is treated as unmarried.

[T.D. 7123, 36 FR 11086, June 9, 1971. Redesignated by T.D. 8712, 62 FR 2283, Jan. 16, 1997]

§ 1.7704–1 Publicly traded partnerships.

(a) *In general*—(1) *Publicly traded partnership.* A domestic or foreign partnership is a publicly traded partnership for purposes of section 7704(b) and this section if—

(i) Interests in the partnership are traded on an established securities market; or

(ii) Interests in the partnership are readily tradable on a secondary market or the substantial equivalent thereof.

(2) *Partnership interest*—(i) *In general.* For purposes of section 7704(b) and this section, an interest in a partnership includes—

(A) Any interest in the capital or profits of the partnership (including the right to partnership distributions); and

(B) Any financial instrument or contract the value of which is determined in whole or in part by reference to the partnership (including the amount of partnership distributions, the value of partnership assets, or the results of partnership operations).

(ii) *Exception for non-convertible debt.* For purposes of section 7704(b) and this section, an interest in a partnership does not include any financial instrument or contract that—

(A) Is treated as debt for federal tax purposes; and

(B) Is not convertible into or exchangeable for an interest in the capital or profits of the partnership and does not provide for a payment of equivalent value.

(iii) *Exception for tiered entities.* For purposes of section 7704(b) and this section, an interest in a partnership or a corporation (including a regulated investment company as defined in section 851 or a real estate investment trust as defined in section 856) that holds an interest in a partnership (lower-tier partnership) is not considered an interest in the lower-tier partnership.

(3) *Definition of transfer.* For purposes of section 7704(b) and this section, a transfer of an interest in a partnership means a transfer in any form, including a redemption by the partnership or the entering into of a financial instrument or contract described in paragraph (a)(2)(i)(B) of this section.

(b) *Established securities market.* For purposes of section 7704(b) and this section, an established securities market includes—

(1) A national securities exchange registered under section 6 of the Securities Exchange Act of 1934 (15 U.S.C. 78f);

(2) A national securities exchange exempt from registration under section 6 of the Securities Exchange Act of 1934 (15 U.S.C. 78f) because of the limited volume of transactions;

(3) A foreign securities exchange that, under the law of the jurisdiction where it is organized, satisfies regulatory requirements that are analogous to the regulatory requirements under the Securities Exchange Act of 1934 described in paragraph (b) (1) or (2) of this section (such as the London International Financial Futures Exchange; the Marche a Terme International de France; the International Stock Exchange of the United Kingdom and the Republic of Ireland, Limited; the Frankfurt Stock Exchange; and the Tokyo Stock Exchange);

(4) A regional or local exchange; and

(5) An interdealer quotation system that regularly disseminates firm buy or sell quotations by identified brokers or dealers by electronic means or otherwise.

(c) *Readily tradable on a secondary market or the substantial equivalent thereof*—(1) *In general.* For purposes of section 7704(b) and this section, interests in a partnership that are not traded on an established securities market (within the meaning of section 7704(b) and paragraph (b) of this section) are readily tradable on a secondary market or the substantial equivalent thereof if, taking into account all of the facts and circumstances, the partners are readily able to buy, sell, or exchange their partnership interests in a manner that is comparable, economically, to trading on an established securities market.

(2) *Secondary market or the substantial equivalent thereof.* For purposes of paragraph (c)(1) of this section, interests in a partnership are readily tradable on a secondary market or the substantial equivalent thereof if—

(i) Interests in the partnership are regularly quoted by any person, such

as a broker or dealer, making a market in the interests;

(ii) Any person regularly makes available to the public (including customers or subscribers) bid or offer quotes with respect to interests in the partnership and stands ready to effect buy or sell transactions at the quoted prices for itself or on behalf of others;

(iii) The holder of an interest in the partnership has a readily available, regular, and ongoing opportunity to sell or exchange the interest through a public means of obtaining or providing information of offers to buy, sell, or exchange interests in the partnership; or

(iv) Prospective buyers and sellers otherwise have the opportunity to buy, sell, or exchange interests in the partnership in a time frame and with the regularity and continuity that is comparable to that described in the other provisions of this paragraph (c)(2).

(3) *Secondary market safe harbors*. The fact that a transfer of a partnership interest is not within one or more of the safe harbors described in paragraph (e), (f), (g), (h), or (j) of this section is disregarded in determining whether interests in the partnership are readily tradable on a secondary market or the substantial equivalent thereof.

(d) *Involvement of the partnership required*. For purposes of section 7704(b) and this section, interests in a partnership are not traded on an established securities market within the meaning of paragraph (b)(5) of this section and are not readily tradable on a secondary market or the substantial equivalent thereof within the meaning of paragraph (c) of this section (even if interests in the partnership are traded or readily tradable in a manner described in paragraph (b)(5) or (c) of this section) unless—

(1) The partnership participates in the establishment of the market or the inclusion of its interests thereon; or

(2) The partnership recognizes any transfers made on the market by—

(i) Redeeming the transferor partner (in the case of a redemption or repurchase by the partnership); or

(ii) Admitting the transferee as a partner or otherwise recognizing any rights of the transferee, such as a right of the transferee to receive partnership distributions (directly or indirectly) or to acquire an interest in the capital or profits of the partnership.

(e) *Transfers not involving trading*—(1) *In general*. For purposes of section 7704(b) and this section, the following transfers (private transfers) are disregarded in determining whether interests in a partnership are readily tradable on a secondary market or the substantial equivalent thereof—

(i) Transfers in which the basis of the partnership interest in the hands of the transferee is determined, in whole or in part, by reference to its basis in the hands of the transferor or is determined under section 732;

(ii) Transfers at death, including transfers from an estate or testamentary trust;

(iii) Transfers between members of a family (as defined in section 267(c)(4));

(iv) Transfers involving the issuance of interests by (or on behalf of) the partnership in exchange for cash, property, or services;

(v) Transfers involving distributions from a retirement plan qualified under section 401(a) or an individual retirement account;

(vi) Block transfers (as defined in paragraph (e)(2) of this section);

(vii) Transfers pursuant to a right under a redemption or repurchase agreement (as defined in paragraph (e)(3) of this section) that is exercisable only—

(A) Upon the death, disability, or mental incompetence of the partner; or

(B) Upon the retirement or termination of the performance of services of an individual who actively participated in the management of, or performed services on a full-time basis for, the partnership;

(viii) Transfers pursuant to a closed end redemption plan (as defined in paragraph (e)(4) of this section);

(ix) Transfers by one or more partners of interests representing in the aggregate 50 percent or more of the total interests in partnership capital and profits in one transaction or a series of related transactions; and

(x) Transfers not recognized by the partnership (within the meaning of paragraph (d)(2) of this section).

(2) *Block transfers*. For purposes of paragraph (e)(1)(vi) of this section, a block transfer means the transfer by a

partner and any related persons (within the meaning of section 267(b) or 707(b)(1)) in one or more transactions during any 30 calendar day period of partnership interests representing in the aggregate more than 2 percent of the total interests in partnership capital or profits.

(3) *Redemption or repurchase agreement.* For purposes of section 7704(b) and this section, a redemption or repurchase agreement means a plan of redemption or repurchase maintained by a partnership whereby the partners may tender their partnership interests for purchase by the partnership, another partner, or a person related to another partner (within the meaning of section 267(b) or 707(b)(1)).

(4) *Closed end redemption plan.* For purposes of paragraph (e)(1)(viii) of this section, a redemption or repurchase agreement (as defined in paragraph (e)(3) of this section) is a closed end redemption plan only if—

(i) The partnership does not issue any interest after the initial offering (other than the issuance of additional interests prior to August 5, 1988); and

(ii) No partner or person related to any partner (within the meaning of section 267(b) or 707(b)(1)) provides contemporaneous opportunities to acquire interests in similar or related partnerships which represent substantially identical investments.

(f) *Redemption and repurchase agreements.* For purposes of section 7704(b) and this section, the transfer of an interest in a partnership pursuant to a redemption or repurchase agreement (as defined in paragraph (e)(3) of this section) that is not described in paragraph (e)(1) (vii) or (viii) of this section is disregarded in determining whether interests in the partnership are readily tradable on a secondary market or the substantial equivalent thereof only if—

(1) The redemption or repurchase agreement provides that the redemption or repurchase cannot occur until at least 60 calendar days after the partner notifies the partnership in writing of the partner's intention to exercise the redemption or repurchase right;

(2) Either—

(i) The redemption or repurchase agreement requires that the redemption or repurchase price not be established until at least 60 calendar days after receipt of such notification by the partnership or the partner; or

(ii) The redemption or repurchase price is established not more than four times during the partnership's taxable year; and

(3) The sum of the percentage interests in partnership capital or profits transferred during the taxable year of the partnership (other than in private transfers described in paragraph (e) of this section) does not exceed 10 percent of the total interests in partnership capital or profits.

(g) *Qualified matching services*—(1) *In general.* For purposes of section 7704(b) and this section, the transfer of an interest in a partnership through a qualified matching service is disregarded in determining whether interests in the partnership are readily tradable on a secondary market or the substantial equivalent thereof.

(2) *Requirements.* A matching service is a qualified matching service only if—

(i) The matching service consists of a computerized or printed listing system that lists customers' bid and/or ask quotes in order to match partners who want to sell their interests in a partnership (the selling partner) with persons who want to buy those interests;

(ii) Matching occurs either by matching the list of interested buyers with the list of interested sellers or through a bid and ask process that allows interested buyers to bid on the listed interest;

(iii) The selling partner cannot enter into a binding agreement to sell the interest until the 15th calendar day after the date information regarding the offering of the interest for sale is made available to potential buyers and such time period is evidenced by contemporaneous records ordinarily maintained by the operator at a central location;

(iv) The closing of the sale effected by virtue of the matching service does not occur prior to the 45th calendar day after the date information regarding the offering of the interest for sale is made available to potential buyers and such time period is evidenced by contemporaneous records ordinarily

maintained by the operator at a central location;

(v) The matching service displays only quotes that do not commit any person to buy or sell a partnership interest at the quoted price (nonfirm price quotes) or quotes that express interest in a partnership interest without an accompanying price (nonbinding indications of interest) and does not display quotes at which any person is committed to buy or sell a partnership interest at the quoted price (firm quotes);

(vi) The selling partner's information is removed from the matching service within 120 calendar days after the date information regarding the offering of the interest for sale is made available to potential buyers and, following any removal (other than removal by reason of a sale of any part of such interest) of the selling partner's information from the matching service, no offer to sell an interest in the partnership is entered into the matching service by the selling partner for at least 60 calendar days; and

(vii) The sum of the percentage interests in partnership capital or profits transferred during the taxable year of the partnership (other than in private transfers described in paragraph (e) of this section) does not exceed 10 percent of the total interests in partnership capital or profits.

(3) *Closing*. For purposes of paragraph (g)(2)(iv) of this section, the closing of a sale occurs no later than the earlier of—

(i) The passage of title to the partnership interest;

(ii) The payment of the purchase price (which does not include the delivery of funds to the operator of the matching service or other closing agent to hold on behalf of the seller pending closing); or

(iii) The date, if any, that the operator of the matching service (or any person related to the operator within the meaning of section 267(b) or 707(b)(1)) loans, advances, or otherwise arranges for funds to be available to the seller in anticipation of the payment of the purchase price.

(4) *Optional features*. A qualified matching service may be sponsored or operated by a partner of the partnership (either formally or informally), the underwriter that handled the issuance of the partnership interests, or an unrelated third party. In addition, a qualified matching service may offer the following features—

(i) The matching service may provide prior pricing information, including information regarding resales of interests and actual prices paid for interests; a description of the business of the partnership; financial and reporting information from the partnership's financial statements and reports; and information regarding material events involving the partnership, including special distributions, capital distributions, and refinancings or sales of significant portions of partnership assets;

(ii) The operator may assist with the transfer documentation necessary to transfer the partnership interest;

(iii) The operator may receive and deliver funds for completed transactions; and

(iv) The operator's fee may consist of a flat fee for use of the service, a fee or commission based on completed transactions, or any combination thereof.

(h) *Private placements*—(1) *In general*. For purposes of section 7704(b) and this section, except as otherwise provided in paragraph (h)(2) of this section, interests in a partnership are not readily tradable on a secondary market or the substantial equivalent thereof if—

(i) All interests in the partnership were issued in a transaction (or transactions) that was not required to be registered under the Securities Act of 1933 (15 U.S.C. 77a et seq.); and

(ii) The partnership does not have more than 100 partners at any time during the taxable year of the partnership.

(2) *Exception for certain offerings outside of the United States*. Paragraph (h)(1) of this section does not apply to the offering and sale of interests in a partnership that was not required to be registered under the Securities Act of 1933 by reason of Regulation S (17 CFR 230.901 through 230.904) unless the offering and sale of the interests would not have been required to be registered under the Securities Act of 1933 if the interests had been offered and sold within the United States.

(3) *Anti-avoidance rule.* For purposes of determining the number of partners in the partnership under paragraph (h)(1)(ii) of this section, a person (beneficial owner) owning an interest in a partnership, grantor trust, or S corporation (flow-through entity), that owns, directly or through other flow-through entities, an interest in the partnership, is treated as a partner in the partnership only if—

(i) Substantially all of the value of the beneficial owner's interest in the flow-through entity is attributable to the flow-through entity's interest (direct or indirect) in the partnership; and

(ii) A principal purpose of the use of the tiered arrangement is to permit the partnership to satisfy the 100-partner limitation in paragraph (h)(1)(ii) of this section.

(i) [Reserved]

(j) *Lack of actual trading*—(1) *General rule.* For purposes of section 7704(b) and this section, interests in a partnership are not readily tradable on a secondary market or the substantial equivalent thereof if the sum of the percentage interests in partnership capital or profits transferred during the taxable year of the partnership (other than in transfers described in paragraph (e), (f), or (g) of this section) does not exceed 2 percent of the total interests in partnership capital or profits.

(2) *Examples.* The following examples illustrate the rules of this paragraph (j):

Example 1. Calculation of percentage interest transferred. (i) ABC, a calendar year limited partnership formed in 1996, has 9,000 units of limited partnership interests outstanding at all times during 1997, representing in the aggregate 95 percent of the total interests in capital and profits of ABC. The remaining 5 percent is held by the general partner.

(ii) During 1997, the following transactions occur with respect to the units of ABC's limited partnership interests—

(A) 800 units are sold through the use of a qualified matching service that meets the requirements of paragraph (g) of this section;

(B) 50 units are sold through the use of a matching service that does not meet the requirements of paragraph (g) of this section; and

(C) 500 units are transferred as a result of private transfers described in paragraph (e) of this section.

(iii) The private transfers of 500 units and the sale of 800 units through a qualified matching service are disregarded under paragraph (j)(1) of this section for purposes of applying the 2 percent rule. As a result, the total percentage interests in partnership capital and profits transferred for purposes of the 2 percent rule is .528 percent, determined by—

(A) Dividing the number of units sold through a matching service that did not meet the requirements of paragraph (g) of this section (50) by the total number of outstanding limited partnership units (9,000); and

(B) Multiplying the result by the percentage of total interests represented by limited partnership units (95 percent)

([50 / 9,000] ×.95 =.528 percent).

Example 2. Application of the 2 percent rule. (i) ABC operates a service consisting of computerized video display screens on which subscribers view and publish nonfirm price quotes that do not commit any person to buy or sell a partnership interest and unpriced indications of interest in a partnership interest without an accompanying price. The ABC service does not provide firm quotes at which any person (including the operator of the service) is committed to buy or sell a partnership interest. The service may provide prior pricing information, including information regarding resales of interests and actual prices paid for interests; transactional volume information; and information on special or capital distributions by a partnership. The operator's fee may consist of a flat fee for use of the service; a fee based on completed transactions, including, for example, the number of nonfirm quotes or unpriced indications of interest entered by users of the service; or any combination thereof.

(ii) The ABC service is not an established securities market for purposes of section 7704(b) and this section. The service is not an interdealer quotation system as defined in paragraph (b)(5) of this section because it does not disseminate firm buy or sell quotations. Therefore, partnerships whose interests are listed and transferred on the ABC service are not publicly traded for purposes of section 7704(b) and this section as a result of such listing or transfers if the sum of the percentage interests in partnership capital or profits transferred during the taxable year of the partnership (other than in transfers described in paragraph (e), (f), or (g) of this section) does not exceed 2 percent of the total interests in partnership capital or profits. In addition, assuming the ABC service complies with the necessary requirements, the service may qualify as a matching service described in paragraph (g) of this section.

(k) *Percentage interests in partnership capital or profits*—(1) *Interests considered*—(i) *General rule.* Except as otherwise provided in this paragraph (k), for

purposes of this section, the total interests in partnership capital or profits are determined by reference to all outstanding interests in the partnership.

(ii) *Exceptions*—(A) *General partner with greater than 10 percent interest.* If the general partners and any person related to the general partners (within the meaning of section 267(b) or 707(b)(1)) own, in the aggregate, more than 10 percent of the outstanding interests in partnership capital or profits at any one time during the taxable year of the partnership, the total interests in partnership capital or profits are determined without reference to the interests owned by such persons.

(B) *Derivative interests.* Any partnership interests described in paragraph (a)(2)(i)(B) of this section are taken into account for purposes of determining the total interests in partnership capital or profits only if and to the extent that the partnership satisfies paragraph (d) (1) or (2) of this section.

(2) *Monthly determination.* For purposes of this section, except in the case of block transfers (as defined in paragraph (e)(2) of this section), the percentage interests in partnership capital or profits represented by partnership interests that are transferred during a taxable year of the partnership is equal to the sum of the percentage interests transferred for each calendar month during the taxable year of the partnership in which a transfer of a partnership interest occurs (other than a private transfer as described in paragraph (e) of this section). The percentage interests in capital or profits of interests transferred during a calendar month is determined by reference to the partnership interests outstanding during that month.

(3) *Monthly conventions.* For purposes of paragraph (k)(2) of this section, a partnership may use any reasonable convention in determining the interests outstanding for a month, provided the convention is consistently used by the partnership from month to month during a taxable year and from year to year. Reasonable conventions include, but are not limited to, a determination by reference to the interests outstanding at the beginning of the month, on the 15th day of the month, or at the end of the month.

(4) *Block transfers.* For purposes of paragraph (e)(2) of this section (defining block transfers), the partnership must determine the percentage interests in capital or profits for each transfer of an interest during the 30 calendar day period by reference to the partnership interests outstanding immediately prior to such transfer.

(5) *Example.* The following example illustrates the rules of this paragraph (k):

Example. Conventions. (i) ABC limited partnership, a calendar year partnership formed in 1996, has 1,000 units of limited partnership interests outstanding on January 1, 1997, representing in the aggregate 95 percent of the total interests in capital and profits of ABC. The remaining 5 percent is held by the general partner.

(ii) The following transfers take place during 1997—

(A) On January 15, 10 units of limited partnership interests are sold in a transaction that is not a private transfer;

(B) On July 10, 1,000 additional units of limited partnership interests are issued by the partnership (the general partner's percentage interest is unchanged); and

(C) On July 20, 15 units of limited partnership interests are sold in a transaction that is not a private transfer.

(iii) For purposes of determining the sum of the percentage interests in partnership capital or profits transferred, ABC chooses to use the end of the month convention. The percentage interests in partnership capital and profits transferred during January is .95 percent, determined by dividing the number of transferred units (10) by the total number of limited partnership units (1,000) and multiplying the result by the percentage of total interests represented by limited partnership units ([10/1,000]×.95). The percentage interests in partnership capital and profits transferred during July is .7125 percent ([15/2,000]×.95). ABC is not required to make determinations for the other months during the year because no transfers of partnership interests occurred during such months. ABC may qualify for the 2 percent rule for its 1997 taxable year because less than 2 percent (.95 percent+.7125 percent=1.6625 percent) of its total interests in partnership capital and profits was transferred during that year.

(iv) If ABC had chosen to use the beginning of the month convention, the interests in capital or profits sold during July would have been 1.425 percent ([15/1,000]×.95) and ABC would not have satisfied the 2 percent rule for its 1997 taxable year because 2.375 percent (.95 + 1.425) of ABC's interests in

partnership capital and profits was transferred during that year.

(l) *Effective date*—(1) *In general*. Except as provided in paragraph (l)(2) of this section, this section applies to taxable years of a partnership beginning after December 31, 1995.

(2) *Transition period*. For partnerships that were actively engaged in an activity before December 4, 1995, this section applies to taxable years beginning after December 31, 2005, unless the partnership adds a substantial new line of business after December 4, 1995, in which case this section applies to taxable years beginning on or after the addition of the new line of business. Partnerships that qualify for this transition period may continue to rely on the provisions of Notice 88–75 (1988–2 C.B. 386) (see § 601.601(d)(2) of this chapter) for guidance regarding the definition of readily tradable on a secondary market or the substantial equivalent thereof for purposes of section 7704(b).

(3) *Substantial new line of business*. For purposes of paragraph (l)(2) of this section—

(i) Substantial is defined in § 1.7704–2(c); and

(ii) A new line of business is defined in § 1.7704–2(d), except that the applicable date is ''December 4, 1995'' instead of ''December 17, 1987''.

(4) *Termination under section 708(b)(1)(B)*. The termination of a partnership under section 708(b)(1)(B) due to the sale or exchange of 50 percent or more of the total interests in partnership capital and profits is disregarded in determining whether a partnership qualifies for the transition period provided in paragraph (l)(2) of this section.

[T.D. 8629, 60 FR 62029, Dec. 4, 1995]

§ 1.7704–2 Transition provisions.

(a) *Transition rule*—(1) *Statutory dates*. Section 7704 generally applies to taxable years beginning after December 31, 1987. In the case of an existing partnership, however, section 7704 and the regulations thereunder apply to taxable years beginning after December 31, 1997.

(2) *Effective date of regulations*. These regulations are effective for taxable years beginning after December 31, 1991.

(b) *Existing partnership*—(1) *In general*. For purposes of § 1.7704–2, the term ''existing partnership'' means any partnership if—

(i) The partnership was a publicly traded partnership (within the meaning of section 7704(b)) on December 17, 1987;

(ii) A registration statement indicating that the partnership was to be a publicly traded partnership was filed with the Securities and Exchange Commission (SEC) with respect to the partnership on or before December 17, 1987; or

(iii) With respect to the partnership, an application was filed with a state regulatory commission on or before December 17, 1987, seeking permission to restructure a portion of a corporation as a publicly traded partnership.

(2) *Changed status of an existing partnership*. A partnership will not qualify as an existing partnership after a new line of business is substantial.

(c) *Substantial*—(1) *In general*. A new line of business is substantial as of the earlier of—

(i) The taxable year in which the partnership derives more than 15 percent of its gross income from that line of business; or

(ii) The taxable year in which the partnership directly uses in that line of business more than 15 percent (by value) of its total assets.

(2) *Timing rule*. If a substantial new line of business is added during the taxable year (*e.g.*, by acquisition), the line of business is treated as substantial as of the date it is added; otherwise a substantial new line of business is treated as substantial as of the first day of the taxable year in which it becomes substantial.

(d) *New line of business*—(1) *In general*. A new line of business is any business activity of the partnership not closely related to a pre-existing business of the partnership to the extent that the activity generates income other than ''qualifying income'' within the meaning of section 7704 and the regulations thereunder.

(2) *Pre-existing business*. A business activity is a pre-existing business of the partnership if—

(i) The partnership was actively engaged in the activity on or before December 17, 1987; or

(ii) The partnership is actively engaged in the business activity that was specifically described as a proposed business activity of the partnership in a registration statement or amendment thereto filed on behalf of the partnership with the SEC on or before December 17, 1987. For this purpose, a specific description does not include a general grant of authority to conduct any business.

(3) *Closely related.* All of the facts and circumstances will determine whether a new business activity is closely related to a pre-existing business of the partnership. The following factors, among others, will help to establish that a new business activity is closely related to a pre-existing business of the partnership and therefore is not a new line of business:

(i) The activity provides products or services very similar to the products or services provided by the pre-existing business.

(ii) The activity markets products and services to the same class of customers as that of the pre-existing business.

(iii) The activity is of a type that is normally conducted in the same business location as the pre-existing business.

(iv) The activity requires the use of similar operating assets as those used in the pre-existing business.

(v) The activity's economic success depends on the success of the pre-existing business.

(vi) The activity is of a type that would normally be treated as a unit with the pre-existing business in the business' accounting records.

(vii) If the activity and the pre-existing business are regulated or licensed, they are regulated or licensed by the same or similar governmental authority.

(viii) The United States Bureau of the Census assigns the activity the same four-digit Industry Number Standard Identification Code (Industry SIC Code) as the pre-existing business. Such codes are set forth in the Executive Office of the President, Office of Management and Budget, Standard Industrial Classification Manual, prepared, and from time to time revised, by the Statistical Policy Division of the United States Office of Management and Budget. For example, if a partnership's pre-existing business is manufacturing steam turbines and then the partnership begins an activity manufacturing hydraulic turbines, both activities would be assigned the same Industry SIC Code, 3511—Steam, Gas, and Hydraulic Turbines, and Turbine Generator Set Units. In the case of a pre-existing business or activity that is listed under the Industry SIC Code, 9999—Nonclassifiable Establishments—or under a miscellaneous category (e.g., most Industry SIC Codes ending in a ''9'' are miscellaneous categories), the similarity of the SIC Codes is ignored as a factor in determining whether the activity is closely related to the pre-existing business. The dissimilarity of the SIC Codes is considered in determining whether the business activity is closely related to the pre-existing line of business.

(e) *Activities conducted through controlled corporations*—(1) *In general.* An activity conducted by a corporation controlled by an existing partnership may be treated as an activity of the existing partnership if the effect of the arrangement is to permit the partnership to engage in an activity the income from which is not subject to a corporate-level tax and which would be a new line of business if conducted directly by the partnership. This determination is based upon all facts and circumstances.

(2) *Safe harbor*—(i) *In general.* This paragraph (e)(2) provides a safe harbor for activities of a corporation controlled by an existing partnership. An activity conducted by a corporation controlled by an existing partnership is not deemed to be an activity of the partnership for purposes of determining whether an existing partnership has added a new line of business if no more than 10% of the gross income that the partnership derives from the corporation during the taxable year is section 7704(d) qualifying income that is recharacterized as nonqualifying income under paragraphs (e)(2) (ii) and (iii) of this section. The Internal Revenue Service will not presume that an activity conducted through a corporation controlled by an existing partnership is an activity of the partnership

solely because the partnership fails to satisfy the requirements of this paragraph (e)(2)(i).

(ii) *Recharacterization of qualifying income.* Gross income received by a partnership from a controlled corporation that would be qualifying income under section 7704(d) is subject to recharacterization as nonqualifying income if the amount is deductible in computing the income of the controlled corporation.

(iii) *Extent of recharacterization.* The amount of income described in paragraph (e)(2)(ii) of this section that is recharacterized as nonqualifying income is—

(A) The amount described in paragraph (e)(2)(ii) of this section; multiplied by

(B) The controlled corporation's taxable income (determined without regard to deductions for amounts paid to the partnership) that would not be qualifying income within the meaning of section 7704(d) if earned directly by the partnership; divided by

(C) The controlled corporation's taxable income (determined without regard to deductions for amounts paid to the partnership).

(3) *Control.* For purposes of paragraphs (e) (1) and (2) of this section, control of a corporation is determined generally under the rules of section 304(c). However, the application of section 304(c) is modified to apply only to partners who own five percent or more by value (directly or indirectly) of the existing partnership unless a principal purpose of the arrangement is to avoid tax at the corporate level.

(4) *Example.* The following example illustrates the application of the this paragraph (e):

Example. (i) PTP, an existing partnership, acquired all the stock of X corporation on January 1, 1993. During PTP's 1993 taxable year it received $185,000 of dividends and $15,000 of interest from X. Determined without regard to interest paid to PTP, X's taxable income during that period was $500,000 none of which was ''qualifying income'' within the meaning of section 7704 and the regulations thereunder. In computing the income of X, the $15,000 of interest paid to PTP is deductible.

(ii) Under paragraph (e)(2)(ii) of section, all $15,000 of PTP's interest income was nonqualifying income ($15,000 x 500,000/500,000). Under paragraph (e)(2) of this section, however, the activities of X will not be considered to be activities of PTP for the 1993 taxable year because no more than 10 percent of the gross income that PTP derived from X would be treated as other than qualifying income (15,000/200,000=7.5%).

(f) *Activities conducted through tiered partnerships.* An activity conducted by a partnership in which an existing partnership holds an interest (directly or through another partnership) will be considered an activity of the existing partnership.

(g) *Exceptions*—(1) *Coordination with gross income requirements of section 7704(c)(2).* A partnership that is either an existing partnership as of December 31, 1997, or an existing partnership that ceases to qualify as an existing partnership is subject to section 7704 and the regulations thereunder. Section 7704(a) does not apply to these partnerships, however, if these partnerships meet the gross income requirements of paragraphs (c) (1) and (2) of section 7704. For purposes of applying section 7704(c) (1) and (2) to these partnerships, the only taxable years that must be tested are those beginning on and after the earlier of—

(i) January 1, 1998; or

(ii) The day on which the partnership ceases to qualify as an existing partnership because of the addition of a new line of business; or

(iii) The first day of the first taxable year in which a new line of business becomes substantial (if the new line of business becomes substantial after the year in which it is added).

(2) *Specific exceptions.* In determining whether a partnership is an existing partnership for purposes of section 7704, the following events do not in themselves terminate the status of existing partnerships—

(i) Termination of the partnership under section 708(b)(1)(B) due to the sale or exchange of 50 percent or more of the total interests in partnership capital and profits;

(ii) Issuance of additional partnership units; and

(iii) Dropping a line of business. This event, however, could affect an existing partnership's status indirectly. For example, dropping one line of business could change the composition of the partnership's gross income. The change

in composition could make a new line of business ''substantial,'' under paragraph (c) of this section, and terminate the partnership's status. See paragraph (b)(2) of this section.

(h) *Examples*. The following examples illustrate the application of this section:

Example 1. (i) On December 17, 1987, PTP, a calendar-year publicly traded partnership, owned and operated citrus groves. On March 1, 1993, PTP purchased a processing business involving frozen citrus products. In the partnership's 1993 taxable year, the partnership directly used in the processing business more than 15 percent (by value) of its total assets.

(ii) The citrus grove activities provide different products from the processing activities, are marketed to customers different from the customers of the processing activities, require different types of operating assets, are not commonly conducted at the same location, are not commonly treated as a unit in accounting records, do not depend upon one another for economic success, and do not have the same Industry SIC Code. Under the facts and circumstances, the processing business is not closely related to the citrus grove operation and is a new line of business under paragraph (d)(1) of this section.

(iii) The assets of the partnership used in the new line of business are substantial under paragraph (c)(2) of this section. Because PTP added a substantial new line of business after December 17, 1987, paragraph (b)(2) of this section terminates PTP's status as an existing partnership on March 1, 1993.

Example 2. (i) On December 17, 1987, PTP, a calendar-year publicly traded partnership, owned and operated retirement centers that serve the elderly. Each center contains three sections—

(A) A residential section, which includes suites of rooms, dining facilities, lounges, and gamerooms;

(B) An assisted-living section, which provides laundry and housekeeping services, health monitoring, and emergency care; and

(C) A nursing section, which provides private and semiprivate rooms, dining facilities, examination and treatment rooms, drugs, medical equipment, and physical, speech, and occupational therapy.

(ii) The business activities of each section constitute pre-existing businesses of PTP under paragraph (d)(2) of this section, because PTP was actively engaged in the activities on or before December 17, 1987.

(iii) The nursing sections primarily furnish health care. They employ nurses and therapists, are subject to federal, state, and local licensing requirements, and may change certain costs to government programs like Medicare and Medicaid.

(iv) In 1993, PTP acquired new nursing homes that treat inpatient adults of all ages. The nursing homes provide private and semiprivate rooms, dining facilities, examination and treatment rooms, drugs, medical equipment, and physical, speech, and occupational therapy. The nursing homes primarily furnish health care. They employ nurses and therapists, are subject to federal, state, and local licensing requirements, and may charge certain costs to government programs like Medicare and Medicaid.

(v) PTP's new nursing homes and old nursing sections provide very similar services, market to very similar customers, use similar types of property and personnel, and are licensed by the same regulatory agencies. The nursing homes and old nursing sections have the same Industry SIC Code. Under these facts and circumstances, the new nursing homes are closely related to a pre-existing business of the partnership. Accordingly, under paragraph (d)(1) of this section, the acquisition of the new nursing homes is not the addition of a new line of business.

(vi) PTP was a publicly traded partnership on December 17, 1987, and was an existing partnership under paragraph (b)(1)(i) of this section. Because PTP has added no substantial new line of business after December 17, 1987, paragraph (b)(2) of this section does not terminate PTP's status as an existing partnership.

Example 3. (i) On December 17, 1987, PTP, a calendar-year publicly traded partnership, owned and operated cable television systems in the northeastern United States. PTP's registration statement described as its proposed business activities the ownership and operation of cable television systems, any ancillary operations, and any business permitted by the laws of the state in which PTP was formed.

(ii) PTP's cable systems include cables strung along telephone lines, converter boxes in subscribers' homes, other types of cable equipment, satellite dishes that receive programs broadcast by various television networks, and channels that carry public service announcements of local interest. Subscribers pay the systems a fee for the right to receive both the local announcements and the network signals relayed through the cables. Those fees constitute PTP's primary revenue. The systems operate under franchise agreements negotiated with each municipality in which they do business.

(iii) On September 1, 1993, PTP purchased a television station in the northwestern United States. The station owns broadcasting facilities, satellite dishes that receive programs broadcast by the station's network, and a studio that produces programs of interest to the area that receives the station's broadcasts. Fees from advertisers constitute the station's primary revenue. The station operates under a license

from the Federal Communications Commission.

(iv) In the partnership's 1993 taxable year, the station generated less than 15 percent of PTP's gross income and constituted less than 15 percent of its total assets (by value). In PTP's 1994 taxable year, the station generated more than 15 percent of PTP's gross income.

(v) The cable systems relay signals through cables to subscribers and earn revenue from subscriber fees; the station broadcasts signals to the general public and earns revenue by selling air time for commercials. Despite certain similarities, the two types of activities generally require different operating assets and earn income from different sources. They are regulated by different agencies. They are not commonly conducted at the same location and do not generally depend upon one another for their economic success. They have different Industry SIC Codes. Under the facts and circumstances, the television station activities are not closely related to PTP's pre-existing business, the cable system activities.

(vi) As of December 17, 1987, PTP did not own and operate any television station. PTP's registration statement specifically described as its proposed business activities only the ownership and operation of cable television systems and any ancillary operations. For purposes of paragraph (d)(2) of this section, a specific description does not include PTP's general authority to carry on any business permitted by the state of its formation. Therefore, the television station line of business was not specifically described as a proposed business activity of PTP in its registration statement. PTP's acquisition of the television station business activity constitutes a new line of business under paragraph (d)(1) of this section.

(vii) PTP was a publicly traded partnership on December 17, 1987, and was an existing partnership under paragraph (b)(1)(i) of this section. PTP added a new line of business in 1993, but that line of business was not substantial under paragraph (c) of this section, and thus PTP remained an existing partnership for its 1993 taxable year. In 1994, the new line of business became substantial because it generated more than 15 percent of PTP's gross income. Paragraph (b)(2) of this section therefore terminates PTP's existing partnership status as of January 1, 1994, the first day of the first taxable year beginning after December 31, 1987, in which PTP's new line of business became substantial.

[T.D. 8450, 57 FR 58708, Dec. 11, 1992]

§ 1.7704–3 Qualifying income.

(a) *Certain investment income*—(1) *In general*. For purposes of section 7704(d)(1), qualifying income includes capital gain from the sale of stock, income from holding annuities, income from notional principal contracts (as defined in § 1.446–3), and other substantially similar income from ordinary and routine investments to the extent determined by the Commissioner. Income from a notional principal contract is included in qualifying income only if the property, income, or cash flow that measures the amounts to which the partnership is entitled under the contract would give rise to qualifying income if held or received directly by the partnership.

(2) *Limitations*. Qualifying income described in paragraph (a)(1) of this section does not include income derived in the ordinary course of a trade or business. For purposes of the preceding sentence, income derived from an asset with respect to which the partnership is a broker, market maker, or dealer is income derived in the ordinary course of a trade or business; income derived from an asset with respect to which the taxpayer is a trader or investor is not income derived in the ordinary course of a trade or business.

(b) *Calculation of gross income and qualifying income*—(1) *Treatment of losses*. Except as otherwise provided in this section, in computing the gross income and qualifying income of a partnership for purposes of section 7704(c)(2) and this section, losses do not enter into the computation.

(2) *Certain positions that are marked to market*. Gain recognized with respect to a position that is marked to market (for example, under section 475(f), 1256, 1259, or 1296) shall not fail to be qualifying income solely because there is no sale or disposition of the position.

(3) *Certain items of ordinary income*. Gain recognized with respect to a capital asset shall not fail to be qualifying income solely because it is characterized as ordinary income under section 475(f), 988, 1258, or 1296.

(4) *Straddles*. In computing the gross income and qualifying income of a partnership for purposes of section 7704(c)(2) and this section, a straddle (as defined in section 1092(c)) shall be treated as set forth in this paragraph (b)(4). For purposes of the preceding sentence, two or more straddles that are part of a larger straddle shall be

treated as a single straddle. The amount of the gain from any straddle to be taken into account shall be computed as follows:

(i) *Straddles other than mixed straddle accounts.* With respect to each straddle (whether or not a straddle during the taxable year) other than a mixed straddle account, the amount of gain taken into account shall be the excess, if any, of gain recognized during the taxable year with respect to property that was at any time a position in that straddle over any loss recognized during the taxable year with respect to property that was at any time a position in that straddle (including loss realized in an earlier taxable year).

(ii) *Mixed straddle accounts.* With respect to each mixed straddle account (as defined in §1.1092(b)–4T(b)), the amount of gain taken into account shall be the annual account gain for that mixed straddle account, computed pursuant to §1.1092(b)–4T(c)(2).

(5) *Certain transactions similar to straddles.* In computing the gross income and qualifying income of a partnership for purposes of section 7704(c)(2) and this section, related interests in property (whether or not personal property as defined in section 1092(d)(1)) that produce a substantial diminution of the partnership's risk of loss similar to that of a straddle (as defined in section 1092(c)) shall be combined so that the amount of gain taken into account by the partnership in computing its gross income shall be the excess, if any, of gain recognized during the taxable year with respect to such interests over any loss recognized during the taxable year with respect to such interests.

(6) *Wash sale rule*—(i) *Gain not taken into account.* Solely for purposes of section 7704(c)(2) and this section, if a partnership recognizes gain in a section 7704 wash sale transaction with respect to one or more positions in either a straddle (as defined in section 1092(c)) or an arrangement described in paragraph (b)(5) of this section, then the gain shall not be taken into account to the extent of the amount of unrecognized loss (as of the close of the taxable year) in one or more offsetting positions of the straddle or arrangement described in paragraph (b)(5) of this section.

(ii) *Section 7704 wash sale transaction.* For purposes of this paragraph (b)(6), a section 7704 wash sale transaction is a transaction in which—

(A) A partnership disposes of one or more positions of a straddle (as defined in section 1092(c)) or one or more related positions described in paragraph (b)(5) of this section; and

(B) The partnership acquires a substantially similar position or positions within a period beginning 30 days before the date of the disposition and ending 30 days after such date.

(c) *Effective date.* This section applies to taxable years of a partnership beginning on or after December 17, 1998. However, a partnership may apply this section in its entirety for all of the partnership's open taxable years beginning after any earlier date selected by the partnership.

[T.D. 8799, 63 FR 69553, Dec. 17, 1998]

§§ 1.7872–1—1.7872–4 [Reserved]

§ 1.7872–5T Exempted loans (temporary).

(a) *In general*—(1) *General rule.* Except as provided in paragraph (a)(2) of this section, notwithstanding any other provision of section 7872 and the regulations thereunder, section 7872 does not apply to the loans listed in paragraph (b) of this section because the interest arrangements do not have a significant effect on the Federal tax liability of the borrower or the lender.

(2) *No exemption for tax avoidance loans.* If a taxpayer structures a transaction to be a loan described in paragraph (b) of this section and one of the principal purposes of so structuring the transaction is the avoidance of Federal tax, then the transaction will be recharacterized as a tax avoidance loan as defined in section 7872 (c)(1)(D).

(b) *List of exemptions.* Except as provided in paragraph (a) of this section, the following transactions are exempt from section 7872:

(1) Loans which are made available by the lender to the general public on the same terms and conditions and which are consistent with the lender's customary business practice;

(2) Accounts or withdrawable shares with a bank (as defined in section 581), or an institution to which section 591

applies, or a credit union, made in the ordinary course of its business;

(3) Acquisitions of publicly traded debt obligations for an amount equal to the public trading price at the time of acquisition;

(4) Loans made by a life insurance company (as defined in section 816 (a)), in the ordinary course of its business, to an insured, under a loan right contained in a life insurance policy and in which the cash surrender values are used as collateral for the loans;

(5) Loans subsidized by the Federal, State (including the District of Columbia), or Municipal government (or any agency or instrumentality thereof), and which are made available under a program of general application to the public;

(6) Employee-relocation loans that meet the requirements of paragraph (c)(1) of this section;

(7) Obligations the interest on which is excluded from gross income under section 103;

(8) Obligations of the United States government;

(9) Gift loans to a charitable organization (described in section 170(c)), but only if at no time during the taxable year will the aggregate outstanding amount of gift loans by the lender to that organization exceed $250,000. Charitable organizations which are effectively controlled, within the meaning of § 1.482–1(a)(1), by the same person or persons shall be considered one charitable organization for purposes of this limitation.

(10) Loans made to or from a foreign person that meet the requirements of paragraph (c)(2) of this section;

(11) Loans made by a private foundation or other organization described in section 170(c), the primary purpose of which is to accomplish one or more of the purposes described in section 170(c)(2)(B);

(12) Indebtedness subject to section 482, but such indebtedness is exempt from the application of section 7872 only during the interest-free period, if any, determined under § 1.482–2(a)(1)(iii) with respect to intercompany trade receivables described in § 1.482–2(a)(1)(ii)(A)(*ii*). See also § 1.482–2(a)(3);

(13) All money, securities, and property—

(i) Received by a futures commission merchant or registered broker/dealer or by a clearing organization (A) to margin, guarantee or secure contracts for future delivery on or subject to the rules of a qualified board or exchange (as defined in section 1256(g)(7)), or (B) to purchase, margin, guarantee or secure options contracts traded on or subject to the rules of a qualified board or exchange, so long as the amounts so received to purchase, margin, guarantee or secure such contracts for future delivery or such options contracts are reasonably necessary for such purposes and so long as any commissions received by the futures commission merchant, registered broker-dealer, or clearing organization are not reduced for those making deposits of money, and all money accruing to account holders as the result of such futures and options contacts or

(ii) Received by a clearing organization from a member thereof as a required deposit to a clearing fund, guaranty fund, or similar fund maintained by the clearing organization to protect it against defaults by members.

(14) Loans the interest arrangements of which the taxpayer is able to show have no significant effect on any Federal tax liability of the lender or the borrower, as described in paragraph (c)(3) of this section; and

(15) Loans, described in revenue rulings or revenue procedures issued under section 7872(g)(1)(C), if the Commissioner finds that the factors justifying an exemption for such loans are sufficiently similar to the factors justifying the exemptions contained in this section.

(c) *Special rules*—(1) *Employee-relocation loans*—(i) *Mortgage loans*. In the case of a compensation-related loan to an employee, where such loan is secured by a mortgage on the new principal residence (within the meaning of section 217 and the regulations thereunder) of the employee, acquired in connection with the transfer of that employee to a new principal place of work (which meets the requirements in section 217(c) and the regulations thereunder), the loan will be exempt from section 7872 if the following conditions are satisfied:

(A) The loan is a demand loan or is a term loan the benefits of the interest arrangements of which are not transferable by the employee and are conditioned on the future performance of substantial services by the employee;

(B) The employee certifies to the employer that the employee reasonably expects to be entitled to and will itemize deductions for each year the loan is outstanding; and

(C) The loan agreement requires that the loan proceeds be used only to purchase the new principal residence of the employee.

(ii) *Bridge loans.* In the case of a compensation-related loan to an employee which is not described in paragraph (c)(1)(i) of this section, and which is used to purchase a new principal residence (within the meaning of section 217 and the regulations thereunder) of the employee acquired in connection with the transfer of that employee to a new principal place of work (which meets the requirements in section 217(c) and the regulations thereunder), the loan will be exempt from section 7872 if the following conditions are satisfied:

(A) The conditions contained in paragraphs (c)(1)(i) (A), (B), and (C) of this section;

(B) The loan agreement provides that the loan is payable in full within 15 days after the date of the sale of the employee's immediately former principal residence;

(C) The aggregate principal amount of all outstanding loans described in this paragraph (c)(1)(ii) to an employee is no greater than the employer's reasonable estimate of the amount of the equity of the employee and the employee's spouse in the employee's immediately former principal residence, and

(D) The employee's immediately former principal residence is not converted to business or investment use.

(2) *Below-market loans involving foreign persons.* (i) Section 7872 shall not apply to a below-market loan (other than a compensation-related loan or a corporation-shareholder loan where the borrower is a shareholder that is not a C corporation as defined in section 1361(a)(2)) if the lender is a foreign person and the borrower is a U.S. person unless the interest income imputed to the foreign lender (without regard to this paragraph) would be effectively connected with the conduct of a U.S. trade or business within the meaning of section 864(c) and the regulations thereunder and not exempt from U.S. income taxation under an applicable income tax treaty.

(ii) Section 7872 shall not apply to a below-market loan where both the lender and the borrower are foreign persons unless the interest income imputed to the lender (without regard to this paragraph) would be effectively connected with the conduct of a U.S. trade or business within the meaning of section 864(c) and the regulations thereunder and not exempt from U.S. income taxation under an applicable income tax treaty.

(iii) For purposes of this section, the term ''foreign person'' means any person that is not a U.S. person.

(3) *Loans without significant tax effect.* Whether a loan will be considered to be a loan the interest arrangements of which have a significant effect on any Federal tax liability of the lender or the borrower will be determined according to all of the facts and circumstances. Among the factors to be considered are—

(i) Whether items of income and deduction generated by the loan offset each other;

(ii) The amount of such items;

(iii) The cost to the taxpayer of complying with the provisions of section 7872 if such section were applied; and

(iv) Any non-tax reasons for deciding to structure the transaction as a below-market loan rather than a loan with interest at a rate equal to or greater than the applicable Federal rate and a payment by the lender to the borrower.

(26 U.S.C. 7872)

[T.D. 8045, 50 FR 33520, Aug. 20, 1985, as amended by T.D. 8093, 51 FR 25033, July 10, 1986; 51 FR 28553, Aug. 8, 1986; T.D. 8204, 53 FR 18282, May 23, 1988]

PUBLIC LAW 74, 84TH CONGRESS

SOURCE: Sections 1.9000–1 to 1.9000–8 contained in T.D. 6500, 25 FR 12155, Nov. 26, 1960, unless otherwise noted.

§ 1.9000–1 Statutory provisions.

The Act of June 15, 1955 (Pub. L. 74, 84th Cong., 69 Stat. 134), provides as follows:

Be it enacted by the Senate and House of Representatives of the United States of America in Congress assembled,

SECTION 1. *Repeal of sections 452 and 462*—(a) *Prepaid income.* Section 452 of the Internal Revenue Code of 1954 is hereby repealed.

(b) Reserves for estimated expenses, etc. Section 462 of the Internal Revenue Code of 1954 is hereby repealed.

SEC. 2. *Technical amendments.* The following provisions of the Internal Revenue Code of 1954 are hereby amended as follows:

(1) Subsection (c) of section 381 is amended by striking out paragraph (7) (relating to carryover of prepaid income in certain corporate acquisitions).

(2) The table of sections for subpart B of part II of subchapter E of chapter 1 (relating to taxable year for which items of gross income included) is amended by striking out

''Sec. 452. Prepaid income.''

(3) The table of sections for subpart C of such part II (relating to taxable year for which deductions are taken) is amended by striking out:

''Sec. 462. Reserves for estimated expenses, etc.''

SEC. 3. *Effective date.* The amendments made by this act shall apply with respect to taxable years beginning after December 31, 1953, and ending after August 16, 1954.

SEC. 4. *Saving provisions*—(a) *Filing of statement.* If:

(1) the amount of any tax required to be paid for any taxable year ending on or before the date of the enactment of this act is increased by reason of the enactment of this act, and

(2) the last date prescribed for payment of such tax (or any installment thereof) is before December 15, 1955,

then the taxpayer shall, on or before December 15, 1955, file a statement which shows the increase in the amount of such tax required to be paid by reason of the enactment of this act.

(b) *Form and effect of statement*—(1) *Form of statement, etc.* The statement required by subsection (a) shall be filed at the place fixed for filing the return. Such statement shall be in such form, and shall include such information necessary or appropriate to show the increase in the amount of the tax required to be paid for the taxable year by reason of the enactment of this act, as the Secretary of the Treasury or his delegate shall by regulations prescribe.

(2) *Treatment as amount shown on return.* The amount shown on a statement filed under subsection (a) as the increase in the amount of the tax required to be paid for the taxable year by reason of the enactment of this act shall, for all purposes of the internal revenue laws, be treated as tax shown on the return. Notwithstanding the preceding sentence, that portion of the amount of increase in tax for any taxable year which is attributable to a decrease (by reason of the enactment of this act) in the net operating loss for a succeeding taxable year shall not be treated as tax shown on the return.

(3) *Waiver of interest in case of payment on or before December 15, 1955.* If the taxpayer, on or before December 15, 1955, files the statement referred to in subsection (a) and pays in full that portion of the amount shown thereon for which the last date prescribed for payment is before December 15, 1955, then for purposes of computing interest (other than interest on overpayments) such portion shall be treated as having been paid on the last date prescribed for payment. This paragraph shall not apply if the amount shown on the statement as the increase in the amount of the tax required to be paid for the taxable year by reason of the enactment of this act is greater than the actual increase unless the taxpayer establishes, to the satisfaction of the Secretary of the Treasury or his delegate, that his computation of the greater amount was based upon a reasonable interpretation and application of sections 452 and 462 of the Internal Revenue Code of 1954, as those sections existed before the enactment of this act.

(c) *Special rules*—(1) *Interest for period before enactment.* Interest shall not be imposed on the amount of any increase in tax resulting from the enactment of this act for any period before the day after the date of the enactment of this act.

(2) *Estimated tax.* Any addition to the tax under section 294(d) of the Internal Revenue Code of 1939 shall be computed as if this act had not been enacted. In the case of any installment for which the last date prescribed for payment is before December 15, 1955, any addition to the tax under section 6654 of the Internal Revenue Code of 1954 shall be computed as if this act had not been enacted.

(3) *Treatment of certain payments which taxpayer is required to make.* If:

(A) The taxpayer is required to make a payment (or an additional payment) to another person by reason of the enactment of this act, and

(B) The Internal Revenue Code of 1954 prescribes a period, which expires after the close of the taxable year, within which the taxpayer must make such payment (or additional payment) if the amount thereof is to be taken into account (as a deduction or otherwise) in computing taxable income for such taxable year,

then, subject to such regulations as the Secretary of the Treasury or his delegate may prescribe, if such payment (or additional payment) is made on or before December 15,

1955, it shall be treated as having been made within the period prescribed by such Code.

(4) *Treatment of certain dividends.* Subject to such regulations as the Secretary of the Treasury or his delegate may prescribe, for purposes of section 561(a)(1) of the Internal Revenue Code of 1954, dividends paid after the 15th day of the third month following the close of the taxable year and on or before December 15, 1955, may be treated as having been paid on the last day of the taxable year, but only to the extent (A) that such dividends are attributable to an increase in taxable income for the taxable year resulting from the enactment of this act, and (B) elected by the taxpayer.

(5) *Determination of date prescribed.* For purposes of this section, the determination of the last date prescribed for payment or for filing a return shall be made without regard to any extension of time therefor and without regard to any provision of this section.

(6) *Regulations.* For requirement that the Secretary of the Treasury or his delegate shall prescribe all rules and regulations as may be necessary by reason of the enactment of this act, see section 7805(a) of the Internal Revenue Code of 1954.

§ 1.9000–2 Effect of repeal in general.

(a) Section 452 (relating to prepaid income) and section 462 (relating to reserves for estimated expenses) of the Internal Revenue Code of 1954 were repealed by the Act of June 15, 1955 (Pub. L. 74, 84th Cong., 69 Stat. 134), with respect to all years subject to such Code. The effect of the repeal will generally be to increase the tax liability of taxpayers who elected to adopt the methods of accounting provided by sections 452 and 462. References to sections of law in §§ 1.9000–2 to 1.9000–8, inclusive, are references to the Internal Revenue Code of 1954 unless otherwise specified.

(b) The Act of June 15, 1955, provides that if the amount of any tax is increased by the repeal of sections 452 and 462 and if the last date prescribed for the payment of such tax (or any installment thereof) is before December 15, 1955, then the taxpayer shall on or before such date file a statement as prescribed in § 1.9000–3. The last date prescribed for payment for this purpose shall be determined without regard to any extensions of time and without regard to the provisions of the Act of June 15, 1955.

§ 1.9000–3 Requirement of statement showing increase in tax liability.

(a) *Returns filed before June 15, 1955.* Where a return reflecting an election under section 452 or 462 was filed before June 15, 1955, the taxpayer must file on or before December 15, 1955, a statement on Form 2175 showing the increase in tax liability resulting from the repeal of sections 452 and 462. The provisions of this paragraph may be illustrated by the following example:

Example. Corporation X filed its income tax return for the calendar year 1954 on March 15, 1955, and elected under section 6152 to pay the unpaid amount of the tax shown thereon in two equal installments. Such installment payments are due on March 15, 1955, and June 15, 1955, respectively. The corporation elected to compute its tax for such taxable year under the methods of accounting provided by sections 452 and 462. Corporation X's tax liability is increased by reason of the enactment of Public Law 74, and since the last date prescribed for paying its tax expires before December 15, 1955, it is required to submit the prescribed statement on or before December 15, 1955, showing its increase in tax liability.

(b) *Returns filed on or after June 15, 1955.* A taxpayer filing a return on or after June 15, 1955, for a taxable year ending on or before such date, may elect to apply the accounting methods provided in sections 452 and 462. The election may be exercised by either of the following methods:

(1) By computing the tax liability shown on such return as though the provisions of sections 452 and 462 had not been repealed. In such a case, the taxpayer must file on or before December 15, 1955, a statement on Form 2175 showing the increase in tax liability resulting from the repeal of sections 452 and 462.

(2) By computing his tax liability without regard to sections 452 and 462. In this case, Form 2175 must be filed with the return. However, taxable income and the tax liability computed with the application of sections 452 and 462 shall be shown on lines 8 and 14, respectively, of the form in lieu of the amounts otherwise called for on those lines.

If a taxpayer does not make an election to have the provisions of sections 452 and 462 apply, the savings provisions of

section 4 of the Act of June 15, 1955, are not applicable.

(c) *Taxable years ending after June 15, 1955.* A taxpayer having a taxable year ending after June 15, 1955, may not elect to apply the methods of accounting prescribed in sections 452 and 462 in computing taxable income for such taxable year. Such a taxpayer must file his return and pay the tax as if such sections had not been enacted.

(d) *Other situations requiring statements.* (1) A person who made an election under section 452 or 462 but whose tax liability was not increased by reason of the enactment of the Act of June 15, 1955, is nevertheless required to file a statement on Form 2175 if his gross income is increased or his deductions are decreased as the result of the repeal of sections 452 and 462. A partnership which makes an election under such sections must file such a statement. In addition, a partner, stockholder, distributee, etc. (whether or not such person made an election under section 452 or 462), shall file a statement showing any increase in his tax liability resulting from the effects of the repeal on the gross income or deductions of any person mentioned in the previous sentences of this subparagraph.

(2) A statement shall also be filed for a taxable year, other than a year to which an election under section 452 or 462 is applicable, if the repeal of such sections increases the tax liability of such year. Thus, a statement must be filed for any taxable year to which a net operating loss is carried from a year to which an election under section 452 or 462 is applicable, provided that the repeal of such sections affects the amount of the tax liability for the year to which such loss is carried. A separate statement must also be filed for a year in which there is a net operating loss which is changed by reason of the repeal of sections 452 and 462. Where there is a short taxable year involved, a taxpayer may have two taxable years to which elections under sections 452 and 462 are applicable and, in such a case, a statement, on Form 2175, must be filed for each such year.

§ 1.9000–4 Form and content of statement.

(a) *Information to be shown.* The statement shall be filed on Form 2175 which may be obtained from district directors. It shall be filed with the district director for the internal revenue district in which the return was filed. The statement shall be prepared in accordance with the instructions contained thereon and shall show the following information:

(1) The name and address of the taxpayer,

(2) The amounts of each type of income deferred under section 452,

(3) The amount of the addition to each reserve deducted under section 462,

(4) The taxable income and the tax liability of the taxpayer computed with the application of sections 452 and 462,

(5) The taxable income and the tax liability of the taxpayer computed without the application of sections 452 and 462,

(6) The details of the recomputation of taxable income and tax liability, including any changes in other items of income, deductions, and credits resulting from the repeal of sections 452 and 462, and

(7) If self-employment tax is increased, the computations and information required on page 3 of Schedule C, Form 1040.

(b) *Procedure for recomputing tax liability.* In determining the taxable income and the tax liability computed without the application of sections 452 and 462, such items as vacation pay and prepaid subscription income shall be reported under the law and regulations applicable to the taxable year as if such sections had not been enacted. The tax liability for the year shall be recomputed by restoring to taxable income the amount of income deferred under section 452 and the amount of the deduction taken under section 462. Other deductions or credits affected by such changes in taxable income shall be adjusted. For example, if the deduction for contributions allowed for the taxable year was limited under section 170(b), the amount of such deduction shall be recomputed, giving effect to the increase in adjusted gross income or taxable income, as the case may be,

by reason of the adjustments required by the repeal of sections 452 and 462.

§ 1.9000–5 Effect of filing statement.

(a) *Years other than years affected by a net operating loss carryback.* If the taxpayer files a timely statement in accordance with the provisions of § 1.9000–3, the amount of the increase in tax shown on such statement for a taxable year shall, except as provided in paragraph (b) of this section, be considered for all purposes of the Code, as tax shown on the return for such year. In general, such increase shall be assessed and collected in the same manner as if it had been tax shown on the return as originally filed. The provisions of this paragraph may be illustrated by the following example:

Example. A taxpayer filed his return showing a tax liability computed under the methods of accounting provided by sections 452 and 462 as $1,000 and filed the statement in accordance with § 1.9000–3 showing an increase in tax liability of $200. The tax computed as though sections 452 and 462 had not been enacted is $1,200, and the difference of $200 is the increase in the tax attributable to the repeal of sections 452 and 462. This increase is considered to be tax shown on the return for such taxable year. Additions to the tax for fraud or negligence under section 6653 will be determined by reference to $1,200 (that is, $1,000 plus $200) as the tax shown on the return.

(b) *Years affected by a net operating loss carryback.* In the case of a year which is affected by a net operating loss carryback from a year to which an election under section 452 or 462 applies, that portion of the amount of increase in tax shown on the statement for the year to which the loss is carried back which is attributable to a decrease in such net operating loss shall not be treated as tax shown on the return.

§ 1.9000–6 Provisions for the waiver of interest.

(a) *In general.* If the statement is filed in accordance with § 1.9000–3 and if that portion of the increase in tax which is due before December 15, 1955 (without regard to any extension of time for payment and without regard to the provisions of §§ 1.9000–2 to 1.9000–8, inclusive), is paid in full on or before such date, then no interest shall be due with respect to that amount. The provisions of this paragraph may be illustrated by the following example:

Example. Corporation M's return for the calendar year 1954 was filed on March 15, 1955, and the tax liability shown thereon was paid in equal installments on March 15, 1955, and June 15, 1955. M filed a statement on December 15, 1955, showing the increase in its tax liability resulting from the repeal of sections 452 and 462 and paid at that time the increase in tax shown thereon. No interest will be imposed with respect to the amount of such payment.

Interest shall be computed under the applicable provisions of the internal revenue laws on any portion of the increase in tax shown on the statement which is due after December 15, 1955, and which is not paid when due.

(b) *Limitation on application of waiver.* The provisions of paragraph (a) of this section shall not apply to any portion of the increase in tax shown on the statement if such increase reflects an amount in excess of that attributable solely to the repeal of sections 452 and 462, i. e., is attributable in whole or in part to excessive or unwarranted deferrals or accruals under section 452 or 462, as the case may be, in computing the tax liability with the application of such sections. Notwithstanding the preceding sentence, paragraph (a) of this section shall be applicable if the taxpayer can show that the tax liability as computed with the application of sections 452 and 462 is based upon a reasonable interpretation and application of such sections as they existed prior to repeal. If the taxpayer complied with the provisions of the regulations under sections 452 and 462 in computing the tax liability with the application of such sections, he will be regarded as having reasonably interpreted and applied sections 452 and 462. In this regard, it is not essential that the taxpayer submit with his return the detailed information required by such regulations in support of the deduction claimed under section 462, but such information shall be supplied at the request of the Commissioner.

(c) *Interest for periods prior to June 16, 1955.* No interest shall be imposed with respect to any increase in tax resulting solely from the repeal of sections 452 and 462 for any period prior to June 16,

1955 (the day after the date of the enactment of the Act of June 15, 1955). The preceding sentence does not apply to that part of any increase in tax which is due to the improper application of sections 452 and 462. The provisions of this paragraph shall not apply to interest imposed under section 3779 of the Internal Revenue Code of 1939. (See paragraph (d) of this section.)

(d) *Amounts deferred by corporations expecting carrybacks.* Interest shall be imposed at the rate of 6 percent on so much of the amount of tax deferred under section 3779 of the Internal Revenue Code of 1939 as is not satisfied within the meaning of section 3779(i)(1), notwithstanding the fact that a greater amount would have been satisfied, had sections 452 and 462 not been repealed. Interest will be imposed at such rate until the amount not so satisfied is paid.

§ 1.9000–7 Provisions for estimated tax.

(a) *Additions to tax under section 294(d) of the Internal Revenue Code of 1939.* Any addition to the tax under section 294(d) (relating to estimated tax) of the Internal Revenue Code of 1939 shall be computed as if the tax for the year for which the estimate was made were computed with sections 452 and 462 still applicable to such taxable year. For the purpose of the preceding sentence, it is not necessary for the taxpayer actually to have made an election under section 452 or 462; it is only necessary for the taxpayer to have taken such sections into account in estimating its tax liability for the year. Thus, if in determining the amount of estimated tax, the taxpayer computed his estimated tax liability by applying those sections, that portion of any additions to tax under section 294(d) resulting from the repeal of sections 452 and 462 shall be disregarded.

(b) *Additions to tax under section 6654.* In the case of an underpayment of estimated tax, any additions to the tax under section 6654, with respect to installments due before December 15, 1955, shall be computed without regard to any increase in tax resulting from the repeal of sections 452 and 462. Any additions to the tax with respect to installments due on or after December 15, 1955, shall be imposed in accordance with the applicable provisions of the Code, and as though sections 452 and 462 had not been enacted. Thus, a taxpayer whose declaration of estimated tax was based upon an estimate of his taxable income for the year of the estimate which was determined by taking sections 452 and 462 into account, must file an amended declaration on or before the due date of the next installment of estimated tax due on or after December 15, 1955. Such amended declaration shall reflect an estimate of the tax without the application of such sections. If the taxpayer bases his estimate on the tax for the preceding taxable year under section 6654(d)(1)(A), an amended declaration must be filed on or before the due date of the next installment due on or after December 15, 1955, if the tax for the preceding taxable year is increased as the result of the repeal of sections 452 and 462. Similarly, if the taxpayer bases his estimate on the tax computed under section 6654(d)(1)(B), he must file an amended declaration on or before the due date of the next installment due on or after December 15, 1955, taking into account the repeal of sections 452 and 462 with respect to the preceding taxable year. Any increase in estimated tax shown on an amended declaration filed in accordance with this paragraph must be paid in accordance with section 6153(c).

(c) *Estimated tax of corporations.* Corporations required to file a declaration of estimated tax under section 6016 for taxable years ending on and after December 31, 1955, shall estimate their tax liability for such year as if sections 452 and 462 had not been enacted. Thus, if the corporation bases its estimated tax liability under section 6655(d) (1) or (2) on its operations for the preceding taxable year, the effect of the repeal of sections 452 and 462 with respect to such year must be taken into account.

§ 1.9000–8 Extension of time for making certain payments.

(a) *Time for payment specified in Code.* (1) If the treatment of any payment (including its allowance as a deduction or otherwise) is dependent upon the making of a payment within a period of time specified in the Code the period within which the payment is to be

made is extended where the amount to be paid is increased by reason of the repeal of sections 452 and 462: *Provided*, That:

(i) The taxpayer, because of a pre-existing obligation, is required to make a payment or an additional payment to another person by reason of such repeal;

(ii) The deductibility of the payment or additional payment is contingent upon its being made within a period prescribed by the Code, which period expires after the close of the taxable year; and

(iii) The payment or additional payment is made on or before December 15, 1955.

If the foregoing conditions are met, the payment or additional payment will be treated as having been made within the time specified in the Code, and, subject to any other conditions in the Code, it shall be deductible for the year to which it relates. The provision of this paragraph may be illustrated by the following examples:

Example 1. Section 267 (relating to losses, expenses and interest between related taxpayers) applies to amounts accrued by taxpayer A for salary payable to B. For the calendar year 1954, A is obligated to pay B a salary equal to 5 percent of A's taxable income for the taxable year. The amount accrued as salary payable to B for 1954 is $5,000 with the taxable income reflecting the application of section 462. As a result of the repeal of section 462 the salary payable to B for 1954 is increased to $6,000. The additional $1,000 is paid to B on December 15, 1955. In recomputing A's tax liability for 1954 the additional deduction of $1,000 for salary payable to B will be treated as having been made within two and one-half months after the close of the taxable year and will be deductible in that year.

Example 2. On March 1, 1955, Corporation X, a calendar year taxpayer using the accrual method of accounting, makes a payment described in section 404(a)(6) (relating to contributions to an employees' trust) of $10,000 which is accrued for 1954 and is determined on the basis of the amount of taxable income for that year. The taxpayer filed its return on March 15, 1955. By reason of the repeal of section 462, X's taxable income is increased so that it is required to make an additional contribution of $2,000 to the employees' trust. The additional payment is made on December 15, 1955. For purposes of recomputing X's tax liability for 1954, this additional payment is deemed to have been made on the last day of 1954.

(2) The time for inclusion in the taxable income of the payee of any additional payment of the type described in subparagraph (1) of this paragraph, shall be determined without regard to section 4(c)(3) of the Act of June 15, 1955, and §§1.9000–2 to 1.9000–8, inclusive.

(b) *Dividends paid under section 561.* under section 4(c)(4) of the Act of June 15, 1955, the period during which distributions may be recognized as dividends paid under section 561 for a taxable year to which section 452 or 462 apply may be extended under the conditions set forth below.

(1) *Accumulated earnings tax or personal holding company tax.* In the case of the accumulated earnings tax or the personal holding company tax, if:

(i) The income of a corporation is increased for a taxable year by reason of the repeal of sections 452 and 462 so that it would become liable for the tax (or an increase in the tax) imposed on accumulated earnings or personal holding companies unless additional dividends are distributed;

(ii) The corporation distributes dividends to its stockholders after the 15th day of the 3d month following the close of its taxable year and on or before December 15, 1955, which dividends are attributable to an increase in its accumulated taxable income or undistributed personal holding company income, as the case may be, resulting from the repeal of sections 452 and 462, and

(iii) The corporation elects in its statement, submitted under §1.9000–3, to have the provisions of section 4(c)(4) of the Act of June 15, 1955, apply:

Then such dividends shall be treated as having been paid on the last day of the taxable year to which the statement applies.

(2) *Regulated investment companies.* In the case of a regulated investment company taxable under section 852, if:

(i) The taxable income of the regulated investment company is increased by reason of the repeal of sections 452 and 462 (without regard to any deduction for dividends paid as provided for in this subparagraph);

(ii) The company distributes dividends to its stockholders after the 15th day of the 3d month following the close

of its taxable year and on or before December 15, 1955, which dividends are attributable to an increase in its investment company income resulting from the repeal of sections 452 and 462; and

(iii) The company elects in its statement, submitted under § 1.9000–3, to have the provisions of section 4(c)(4) of the Act of June 15, 1955, apply:

then such dividends are to be treated as having been paid on the last day of the taxable year to which the statement applies. The dividends paid are to be determined under this subparagraph without regard to the provisions of section 855.

(3) *Related provisions.* An election made under subparagraph (1) or (2) of this paragraph is irrevocable. The time for inclusion in the taxable income of the distributees of any distributions of the type described in subparagraph (1) or (2) of this paragraph shall be determined without regard to section 4(c)(4) of the Act of June 15, 1955, and §§ 1.9000–2 to 1.9000–8, inclusive.

RETIREMENT-STRAIGHT LINE ADJUSTMENT ACT OF 1958

SOURCE: Sections 1.9001 to 1.9001–4 contained in T.D. 6500, 25 FR 12158, Nov. 26, 1960, unless otherwise noted.

§ 1.9001 Statutory provisions; Retirement-Straight Line Adjustment Act of 1958.

Section 94 of the Technical Amendments Act of 1958 (72 Stat. 1669) provides as follows:

SEC. 94. *Change from retirement to straight line method of computing depreciation in certain cases*—(a) *Short title.* This section may be cited as the ''Retirement-Straight Line Adjustment Act of 1958''.

(b) *Making of election.* Any taxpayer who held retirement-straight line property on his 1956 adjustment date may elect to have this section apply. Such an election shall be made at such time and in such manner as the Secretary shall prescribe. Any election under this section shall be irrevocable and shall apply to all retirement-straight line property as hereinafter provided in this section (including such property for periods when held by predecessors of the taxpayer).

(c) *Retirement-straight line property defined.* For purposes of this section, the term ''retirement-straight line property'' means any property of a kind or class with respect to which the taxpayer or a predecessor (under the terms and conditions prescribed for him by the Commissioner) for any taxable year beginning after December 31, 1940, and before January 1, 1956, changed from the retirement to the straight line method of computing the allowance of deductions for depreciation.

(d) *Basis adjustments as of 1956 adjustment date.* If the taxpayer has made an election under this section, then in determining the adjusted basis on his 1956 adjustment date of all retirement-straight line property held by the taxpayer, in lieu of the adjustments for depreciation provided in section 1016(a) (2) and (3) of the Internal Revenue Code of 1954, the following adjustments shall be made (effective as of his 1956 adjustment date) in respect of all periods before the 1956 adjustment date:

(1) *Depreciation sustained before March 1, 1913.* For depreciation sustained before March 1, 1913, on retirement-straight line property held by the taxpayer or a predecessor on such date for which cost was or is claimed as basis and which either:

(A) *Retired before changeover.* Was retired by the taxpayer or a predecessor before the changeover date, but only if (i) a deduction was allowed in computing net income by reason of such retirement, and (ii) such deduction was computed on the basis of cost without adjustment for depreciation sustained before March 1, 1913. In the case of any such property retired during any taxable year beginning after December 31, 1929, the adjustment under this subparagraph shall not exceed that portion of the amount attributable to depreciation sustained before March 1, 1913, which resulted (by reason of the deduction so allowed) in a reduction in taxes under the Internal Revenue Code of 1954 or prior income, war-profits, or excess-profits tax laws.

(B) *Held on changeover date.* Was held by the taxpayer or a predecessor on the changeover date. This subparagraph shall not apply to property to which paragraph (2) applies.

The adjustment determined under this paragraph shall be allocated (in the manner prescribed by the Secretary) among all retirement-straight line property held by the taxpayer on his 1956 adjustment date.

(2) *Property disposed of after changeover and before 1956 adjustment date.* For that portion of the reserve prescribed by the Commissioner in connection with the changeover which was applicable to property:

(A) Sold, or

(B) With respect to which a deduction was allowed for Federal income tax purposes by reason of casualty or ''abnormal'' retirement in the nature of special obsolescence, if such sale occurred in, or such deduction was allowed for, a period on or after the changeover date and before the taxpayer's 1956 adjustment date.

(3) *Depreciation allowable from changeover to 1956 adjustment date.* For depreciation allowable, under the terms and conditions prescribed by the Commissioner in connection with the changeover, for all periods on and after the changeover date and before the taxpayer's 1956 adjustment date.

This subsection shall apply only with respect to taxable years beginning after December 31, 1955.

(e) *Effect on period from changeover to 1956 adjustment date.* If the taxpayer has made an election under this section, then in determining the adjusted basis of any retirement-straight line property as of any time on or after the changeover date and before the taxpayer's 1956 adjustment date, in lieu of the adjustments for depreciation provided in section 1016(a) (2) and (3) of the Internal Revenue Code of 1954 and the corresponding provisions of prior revenue laws, the following adjustments shall be made:

(1) *For prescribed reserve.* For the amount of the reserve prescribed by the Commissioner in connection with the changeover.

(2) *For allowable depreciation.* For the depreciation allowable under the terms and conditions prescribed by the Commissioner in connection with the changeover.

This subsection shall not apply in determining adjusted basis for purposes of section 437(c) of the Internal Revenue Code of 1939. This subsection shall apply only with respect to taxable years beginning on or after the changeover date and before the taxpayer's 1956 adjustment date.

(f) *Equity invested capital, etc.* If an election is made under this section, then (notwithstanding the terms and conditions prescribed by the Commissioner in connection with the changeover):

(1) *Equity invested capital.* In determining equity invested capital under sections 458 and 718 of the Internal Revenue Code of 1939, accumulated earnings and profits as of the changeover date, and as of the beginning of each taxable year thereafter, shall be reduced by the depreciation sustained before March 1, 1913, as computed under subsection (d)(1)(B); and

(2) *Definition of equity capital.* In determining the adjusted basis of assets for the purpose of section 437(c) of the Internal Revenue Code of 1939 (and in addition to any other adjustments required by such Code), the basis shall be reduced by depreciation sustained before March 1, 1913 (as computed under subsection (d)), together with any depreciation allowable under subsection (e)(2) for any period before the year for which the excess profits credit is being computed.

(g) *Definitions.* For purposes of this section:

(1) *Depreciation.* The term ''depreciation'' means exhaustion, wear and tear, and obsolescence.

(2) *Changeover.* The term ''changeover'' means a change from the retirement to the straight line method of computing the allowance of deductions for depreciation.

(3) *Changeover date.* The term ''changeover date'' means the first day of the first taxable year for which the changeover was effective.

(4) *1956 adjustment date.* The term ''1956 adjustment date'' means, in the case of any taxpayer, the first day of his first taxable year beginning after December 31, 1955.

(5) *Predecessor.* The term ''predecessor'' means any person from whom property of a kind or class to which this section refers was acquired, if the basis of such property is determined by reference to its basis in the hands of such person. Where a series of transfers of property has occurred and where in each instance the basis of the property was determined by reference to its basis in the hands of the prior holder, the term includes each such prior holder.

(6) The term ''Secretary'' means the Secretary of the Treasury or his delegate.

(7) The term ''Commissioner'' means the Commissioner of Internal Revenue.

§ 1.9001–1 Change from retirement to straight-line method of computing depreciation.

(a) *In general.* The Retirement-Straight Line Adjustment Act of 1958 (72 Stat. 1669), which is contained in section 94 of the Technical Amendments Act of 1958, approved September 2, 1958, provides various adjustments to be made by certain railroads which changed from the retirement to the straight-line method of computing the allowance of deductions for the depreciation of those roadway assets which are defined in this section as retirement-straight line property. The adjustments are available to all eligible taxpayers who make an irrevocable election to have the provisions of the Retirement-Straight Line Adjustment Act of 1958 apply. This election shall be made at the time and in the manner prescribed by this section. If an election is made in accordance with this section, then the provisions of the Act and of §§ 1.9001 to 1.9001–4, inclusive, shall apply. An election made in accordance with this section shall not be considered a change in accounting method for purposes of section 481 of the Code.

(b) *Making of election.* (1) Subsection (b) of the Act provides that any taxpayer who held retirement-straight line property on its 1956 adjustment

date may elect to have the provisions of the Act apply. The election shall be irrevocable and shall apply to all retirement-straight line property, including such property for periods when held by predecessors of the taxpayer.

(2) An election may be made in accordance with the provisions of this section even though the taxpayer has, at the time of election, litigated some or all of the issues covered by the provisions of the Act and has received from the courts a determination which is less favorable to the taxpayer than the treatment provided by the Act. Once an election has been made in accordance with the provisions of this section, the taxpayer may not receive the benefit of more favorable treatment, as a result of litigation, than that provided by the Act on the issues involved.

(3) The election to have the provisions of the Act apply shall be made by filing a statement to that effect, on or before January 11, 1960, with the district director for the internal revenue district in which the taxpayer's income tax return for its first taxable year beginning after December 31, 1955, was filed. A copy of this statement shall be filed with any amended return, or claim for refund, made under the Act.

(c) *Definitions*. For purposes of the Act and §§ 1.9001 to 1.9001–4, inclusive:

(1) *The Act*. The term *the Act* means the Retirement-Straight Line Adjustment Act of 1958, as contained in section 94 of the Technical Amendments Act of 1958 (72 Stat. 1669).

(2) *Commissioner*. The term *Commissioner* means the Commissioner of Internal Revenue.

(3) *Retirement-straight line property*. The term *retirement-straight line property* means any property of a kind or class with respect to which the taxpayer (or a predecessor of the taxpayer) changed, pursuant to the terms and conditions prescribed for it by the Commissioner, from the retirement to the straight-line method of computing the allowance for any taxable year beginning after December 31, 1940, and before January 1, 1956, of deductions for depreciation. The term does not include any specific property which has always been properly accounted for in accordance with the straight-line method of computing the depreciation allowances or which, under the terms-letter, was permitted or required to be accounted for under the retirement method.

(4) *Depreciation*. The term *depreciation* means exhaustion, wear and tear, and obsolescence.

(5) *Predecessor*. The term *predecessor* means any person from whom property of a kind or class to which the Act refers was acquired, if the basis of such property is determined by reference to its basis in the hands of such person. Where a series of transfers of property has occurred and where in each instance the basis of the property was determined by reference to its basis in the hands of the prior holder, the term includes each such prior holder.

(6) *Changeover*. The term *changeover* means a change from the retirement to the straight-line method of computing the allowance of deductions for depreciation.

(7) *Changeover date*. The term *changeover date* means the first day of the first taxable year for which the changeover was effective.

(8) *1956 adjustment date*. The term *1956 adjustment date* means, in the case of any taxpayer, the first day of its first taxable year beginning after December 31, 1955.

(9) *Terms-letter*. The term *terms-letter* means the terms and conditions prescribed by the Commissioner in connection with the changeover.

(10) *Terms-letter reserve*. The term *terms-letter reserve* means the reserve for depreciation prescribed by the Commissioner in connection with the changeover.

(11) *Depreciation sustained before March 1, 1913*. The term *depreciation sustained before March 1, 1913* may be construed to mean, to the extent that it is impossible to determine the actual amount of such depreciation from the books and records, that amount which is obtained by (i) deducting the ''cost of reproduction new less depreciation'' from the ''cost of reproduction new'', as ascertained as of the valuation date by the Interstate Commerce Commission under the provisions of section 19a of part I of the Interstate Commerce Act (49 U.S.C. 19a), and then (ii) making such retroactive adjustments to

the remainder as are required, in the opinion of the Commissioner of Internal Revenue, to properly reflect the depreciation sustained before March 1, 1913. For this purpose, any retirement-straight line property held on March 1, 1913, and retired on or before the valuation date shall be taken into account.

§ 1.9001–2 Basis adjustments for taxable years beginning on or after 1956 adjustment date.

(a) *In general.* Subsection (d) of the Act provides the basis adjustments required to be made by the taxpayer as of the 1956 adjustment date in respect of all periods before that date in order to determine the adjusted basis of all retirement-straight line property held by the taxpayer on that date. This adjusted basis on the 1956 adjustment date shall be used by the taxpayer for all purposes of the Code for any taxable year beginning after December 31, 1955. In order to arrive at the adjusted basis on the 1956 adjustment date, the taxpayer shall start with the unadjusted basis of all retirement-straight line property held on the changeover date by the taxpayer or a predecessor and shall, with respect to both the asset and reserve accounts, (1) make the adjustments prescribed by this section and subsection (d) of the Act and (2) also make those adjustments required, in accordance with the method of accounting regularly used, for those additions, retirements, and other dispositions of property which occurred on or after the changeover date and before the taxpayer's 1956 adjustment date. For an illustration of adjustments required in accordance with the method of accounting regularly used, see paragraph (e)(3) of this section. The adjustments required by subsection (d) of the Act shall be made in lieu of the adjustments for depreciation otherwise required by section 1016(a) (2) and (3) of the Code. The adjustments required by subsection (d) of the Act are set forth in paragraphs (b), (c), and (d) of this section.

(b) *Adjustment for depreciation sustained before March 1, 1913*—(1) *In general.* Subsection (d)(1) of the Act requires an adjustment to be made as of the 1956 adjustment date for depreciation sustained before March 1, 1913, on all retirement-straight line property held on March 1, 1913, by the taxpayer or a predecessor for which cost was or is claimed as basis and which was either (i) retired before the changeover date by the taxpayer or a predecessor or (ii) held on the changeover date by the taxpayer or a predecessor. This adjustment for depreciation sustained before March 1, 1913, shall be made in accordance with the conditions and limitations described in subparagraphs (2) and (3) of this paragraph and shall be allocated, in the manner prescribed in subparagraph (4) of this paragraph, among all retirement-straight line property held by the taxpayer on its 1956 adjustment date. The term ''cost'', when used in this paragraph with reference to the basis of property, shall be construed to mean the amount paid for the property or, if that amount could not be determined, then such other amount as was accepted by the Commissioner as ''cost'' for basis purposes.

(2) *Depreciation sustained on property retired before the changeover date.* Pursuant to subsection (d)(1)(A) of the Act, an adjustment to the basis of retirement-straight line property held by the taxpayer on its 1956 adjustment date shall be made as of that date for depreciation sustained before March 1, 1913, on all retirement-straight line property held on March 1, 1913, by the taxpayer or a predecessor for which cost was claimed as the basis and which was retired before the changeover date by the taxpayer or a predecessor, except that:

(i) The adjustment shall be made only if a deduction was allowed in computing net income by reason of the retirement and the deduction so allowed was computed on the basis of the cost of the property unadjusted for depreciation sustained before March 1, 1913, and

(ii) In the case of any such property retired during any taxable year beginning after December 31, 1929, the adjustment shall not exceed that portion of the amount attributable to depreciation sustained before March 1, 1913, which resulted, by reason of the deduction so allowed, in a reduction of taxes under the Code or under prior income, war-profits or excess-profits tax laws.

(3) *Depreciation sustained on property held on the changeover date.* Pursuant to subsection (d)(1)(B) of the Act, an adjustment to the basis of retirement-straight line property held by the taxpayer on its 1956 adjustment date shall be made as of that date for depreciation sustained before March 1, 1913, on all retirement-straight line property held on March 1, 1913, by the taxpayer or a predecessor for which cost was or is claimed as basis and which was held on the changeover date by the taxpayer or a predecessor. This subparagraph shall not apply, however, to any such property which (i) was disposed of on or after the changeover date by reason of sale, casualty, or abnormal retirement in the nature of special obsolescence, and (ii) is property to which paragraph (c) of this section and subsection (d)(2) of the Act apply.

(4) *Manner of allocating adjustment.* Pursuant to subsection (d)(1) of the Act, the amount of the adjustment required under this paragraph for depreciation sustained before March 1, 1913, which is attributable to a particular kind or class of retirement-straight line property held by the taxpayer on its 1956 adjustment date shall be made with respect to that kind or class of such property. If the adjustment required under this paragraph for depreciation sustained before March 1, 1913, is attributable to retirement-straight property of a particular kind or class no longer held by the taxpayer on its 1956 adjustment date, then the part of the adjustment to be allocated to any retirement-straight line property held by the taxpayer on its 1956 adjustment date shall be that amount which bears the same ratio to the adjustment as the unadjusted basis of the property so held bears to the entire unadjusted basis of all retirement-straight line property held by the taxpayer on its 1956 adjustment date.

(c) *Adjustment for part of terms-letter reserve applicable to property disposed of on or after changeover date and before 1956 adjustment date.* Pursuant to subsection (d)(2) of the Act, an adjustment to the basis of retirement-straight line property held by the taxpayer on its 1956 adjustment date shall be made as of that date for that part of the terms-letter reserve which was applicable to any retirement-straight line property disposed of by sale, casualty, or abnormal retirement in the nature of special obsolescence, but only if the sale occurred in, or a deduction by reason of such casualty or abnormal retirement was allowed for Federal income-tax purposes for a period on or after the changeover date and before the taxpayer's 1956 adjustment date. This paragraph shall apply even though, in computing the adjusted basis of the property for purposes of determining gain or loss on the sale, casualty, or abnormal retirement, the basis of the retirement-straight line property was not reduced by the part of the terms-letter reserve applicable to the property. If necessary, the adjustment required by this paragraph shall be allocated, in the manner prescribed in paragraph (b)(4) of this section, among all retirement-straight line property held by the taxpayer on its 1956 adjustment date.

(d) *Adjustment for depreciation allowable under the terms-letter for periods on and after the changeover date and before the 1956 adjustment date.* Pursuant to subsection (d)(3) of the Act, an adjustment to the basis of retirement-straight line property held by the taxpayer on its 1956 adjustment date shall be made as of that date for the entire amount of depreciation allowable under the terms-letter for all periods on and after the changeover date and before the taxpayer's 1956 adjustment date. This adjustment shall include all such depreciation allowable with respect to any retirement-straight line property which was disposed of on or after the changeover date and before the 1956 adjustment date.

(e) *Illustration of basis adjustments required for taxable years beginning on or after the 1956 adjustment date.* The application of this section may be illustrated by the following example, which is based upon the assumption that multiple asset accounts are used:

Example. (1) Assume that on its changeover date, January 1, 1943, the taxpayer or its predecessor held retirement-straight line property with an unadjusted cost basis of $10,000. The terms-letter reserve established as of January 1, 1943, with respect to such property was $3,000. Depreciation sustained before March 1, 1913, on retirement-straight

line property held on that date by the taxpayer or its predecessor, for which cost was or is claimed as basis, amounts to $800. Of this total depreciation sustained before March 1, 1913, $200 is attributable to retirement-straight line property retired before January 1, 1943, under circumstances requiring the adjustment under paragraph (b)(2) of this section, and $600 is attributable to retirement-straight line property held on January 1, 1943, by the taxpayer or its predecessor. On December 31, 1954, retirement-straight line property costing $1,500 was permanently retired under circumstances giving rise to an abnormal retirement in the nature of special obsolescence. The terms-letter reserve applicable to this retired property was $450, of which $120 represents depreciation sustained before March 1, 1913. On December 31, 1954, retirement-straight line property costing $1,000 was also permanently retired under circumstances giving rise to a normal retirement. None of the property retired on December 31, 1954, had any market or salvage value on that date. Depreciation allowable under the terms-letter on retirement-straight line property for all periods on and after January 1, 1943, and before January 1, 1956 (the taxpayer's 1956 adjustment date), amounts to $2,155, of which $345 is applicable to the property retired as an abnormal retirement.

(2) The reserve for depreciation as of January 1, 1956, contains a credit balance of $3,360, determined as follows but without regard to the Act:

(i) Credits to reserve:		
Terms-letter reserve as of January 1, 1943		$3,000
Depreciation allowable under terms-letter from January 1, 1943, to December 31, 1955		2,155
Balance		5,155
(ii) Charges to reserve:		
Part of terms-letter reserve applicable to property abnormally retired	$450	
Depreciation applicable to property abnormally retired and allowable from January 1, 1943, to December 31, 1954	345	
Adjustment for normal retirement	1,000	
		$1,795
(iii) Balance as of January 1, 1956		3,360

(3) The adjusted basis on January 1, 1956, of the retirement-straight line property held by the taxpayer on that date is $6,010, determined as follows and in accordance with this section:

(i) Asset account:		
Unadjusted cost on January 1, 1943		$10,000
Less:		
Adjustment for abnormal retirement	$1,500	
Adjustment for normal retirement	1,000	
		2,500
Balance as of January 1, 1956		7,500
(ii) Credits to reserve for depreciation:		
Depreciation sustained before March 1, 1913, on—		
Property retired before January 1, 1943		200
Property held on January 1, 1943	$600	
Less part of such depreciation sustained on property abnormally retired on December 31, 1954	120	
		480
Part of terms-letter reserve applicable to property abnormally retired on December 31, 1954 (including $120 depreciation sustained before March 1, 1913)		450
Depreciation allowable under terms-letter from January 1, 1943, to December 31, 1955		2,155
Total Credits		3,285
(iii) Charges to reserve for depreciation:		
Part of terms-letter reserve applicable to property abnormally retired		450
Depreciation applicable to property abnormally retired and allowable from January 1, 1943, to December 31, 1954		345
Adjustment for normal retirement		1,000
Total charges		1,795
(iv) Balance in reserve for depreciation:		
Total credits		3,285
Total charges		1,795
Balance as of January 1, 1956		1,490
(v) Adjusted basis of property:		
Balance in asset account		7,500
Balance in reserve for depreciation		1,490
Adjusted basis as of January 1, 1956		6,010

(4) The following adjustments to the reserve determined under subparagraph (2) of this paragraph may be made in order to arrive at the reserve determined under subparagraph (3)(iv) of this paragraph:

(i) Credit balance in reserve, as determined under subparagraph (2) of this paragraph		$3,360
(ii) Credit adjustments:		
Depreciation sustained before March 1, 1913, on—		
Property retired before January 1, 1943	$200	
Property held on January 1, 1943	480	
Part of terms-letter reserve applicable to property abnormally retired on December 31, 1954	450	
		1,130
Balance		4,490

(iii) Debit adjustment:	
Terms-letter reserve as of January 1, 1943	3,000
(iv) Credit Balance in reserve, as determined under subparagraph (3)(iv) of this paragraph ..	1,490

(5) The $6,010 adjusted basis as of January 1, 1956, of the retirement-straight line property held by the taxpayer on that date is to be recovered over the estimated remaining useful life of that property. The remaining useful life of the property will be reviewed regularly, and appropriate adjustments in the rates will be made as necessary in order to spread the remaining cost less estimated salvage over the estimated remaining useful life of the property. See § 1.167(a)–1.

§ 1.9001–3 Basis adjustments for taxable years between changeover date and 1956 adjustment date.

(a) *In general.* (1) Subsection (e) of the Act provides the adjustments required to be made in determining the adjusted basis of any retirement-straight line property as of any time on or after the changeover date and before the taxpayer's 1956 adjustment date. This adjusted basis shall be used for all purposes of the Internal Revenue Code of 1939 and the Internal Revenue Code of 1954 for taxable years beginning on or after the changeover date and before the taxpayer's 1956 adjustment date, except as provided in subparagraph (4) of this paragraph. The adjustments so required, which are set forth in paragraphs (b) and (c) of this section, shall not be used in determining the adjusted basis of property for taxable years beginning before the changeover date or on or after the taxpayer's 1956 adjustment date.

(2) In order to arrive at the adjusted basis as of any specific date occurring on or after the changeover date and before the 1956 adjustment date, the taxpayer shall start with the unadjusted basis of all retirement-straight line property held on the changeover date by the taxpayer or its predecessor and shall, as of that specific date and with respect to both the asset and reserve accounts, (i) make the adjustments prescribed by this section and subsection (e) of the Act and (ii) also make those adjustments required, in accordance with the method of accounting regularly used, for additions, retirements, and other dispositions of property. For an illustration of adjustments required in accordance with the method of accounting regularly used, see the example in paragraph (d) of this section.

(3) The adjustments required by subsection (e) of the Act shall be made in lieu of the adjustments for depreciation otherwise required by section 1016(a) (2) and (3) of the Code and by the corresponding provisions of prior revenue laws.

(4) Although this section, and subsection (e) of the Act, shall apply in determining the excess-profits tax, they shall not apply in determining adjusted basis for the purpose of computing equity capital for any day under section 437(c) (relating to the Excess Profits Tax Act of 1950) (64 Stat. 1137) of the Internal Revenue Code of 1939. For the adjustments to be made in computing equity capital under such section, see paragraph (c) of § 1.9001–4.

(b) *Adjustment for terms-letter reserve.* Pursuant to subsection (e)(1) of the Act, the basis of any retirement-straight line property shall be adjusted, as of any specific applicable date occurring on or after the changeover date and before the 1956 adjustment date, for the amount of the terms-letter reserve applicable to such property.

(c) *Adjustment for depreciation allowable under the terms-letter.* Pursuant to subsection (e)(2) of the Act, the basis of any retirement-straight line property shall be adjusted, as of any specific applicable date occurring on or after the changeover date and before the 1956 adjustment date, for depreciation applicable to such property and allowable under the terms-letter.

(d) *Illustration of basis adjustments required for taxable years beginning on or after the changeover date and before the 1956 adjustment date.* The application of this section may be illustrated by the following example, which is based upon the assumption that multiple asset accounts are used:

Example. (1) The facts are assumed to be the same as those in the example under paragraph (e) of § 1.9001–2, except that the adjusted basis of retirement-straight line property is determined as of January 1, 1955, and the depreciation allowable under the terms-letter from the changeover date to December 31, 1954, is $2,100.

(2) The adjusted basis on January 1, 1955, of the retirement-straight line property held by

the taxpayer on that date is $4,195, determined as follows and in accordance with this section:

(i) Asset account:		
Unadjusted cost on January 1, 1943		$10,000
Less:		
Adjustment for abnormal retirement	$1,500	
Adjustment for normal retirement	1,000	
		2,500
Balance as of January 1, 1955		7,500
(ii) Credits to reserve for depreciation:		
Entire terms-letter reserve as of January 1, 1943		3,000
Depreciation allowable under terms-letter from January 1, 1943, to December 31, 1954		2,100
Total credits		5,100
(iii) Charges to reserve for depreciation:		
Part of terms-letter reserve applicable to property abnormally retired on December 31, 1954		450
Depreciation applicable to property abnormally retired and allowable from January 1, 1943, to December 31, 1954		345
Adjustment for normal retirement		1,000
Total charges		1,795
(iv) Balance in reserve for depreciation:		
Total credits		5,100
Total charges		1,795
Balance as of January 1, 1955		3,305
(v) Adjusted basis of property:		
Balance in asset account		7,500
Balance in reserve for depreciation		3,305
Adjusted basis as of January 1, 1955		4,195

§ 1.9001–4 Adjustments required in computing excess-profits credit.

(a) *In general.* Subsection (f) of the Act provides adjustments required to be made in computing the excess-profits credit for any taxable year under the Excess Profits Tax Act of 1940 (54 Stat. 975) or under the Excess Profits Tax Act of 1950 (64 Stat. 1137). These adjustments are set forth in paragraphs (b) and (c) of this section, and they shall apply notwithstanding the terms-letter.

(b) *Equity invested capital.* (1) Pursuant to subsection (f)(1) of the Act, in determining equity invested capital for any day of any taxable year under section 458 (relating to the Excess Profits Tax Act of 1950) or section 718 (relating to the Excess Profits Tax Act of 1940) of the Internal Revenue Code of 1939, the accumulated earnings and profits as of the changeover date, and as of the beginning of each taxable year thereafter, shall be reduced by the depreciation sustained before March 1, 1913, on all retirement-straight line property held on March 1, 1913, by the taxpayer or a predecessor for which cost was or is claimed as basis and which was held on the changeover date by the taxpayer or a predecessor.

(2) For the computation of accumulated earnings and profits in determining equity invested capital, see 26 CFR (1941 Supp.) 30.718–2, as amended by Treasury Decision 5299, approved October 1, 1943, 8 FR 13451, C.B. 1943, 747 (Regulations 109); 26 CFR (1943 Cum. Supp.) 35.718–2 (Regulations 112); and 26 CFR (1939) 41.458–4 (Regulations 130).

(c) *Equity capital.* (1) Pursuant to subsection (f)(2) of the Act, in determining the adjusted basis of assets for the purpose of computing equity capital for any day under section 437(c) (relating to the Excess Profits Tax Act of 1950) of the Internal Revenue Code of 1939, the basis of the assets which enter into the computation shall also be reduced by:

(i) Depreciation sustained before March 1, 1913, on all retirement-straight line property held on March 1, 1913, by the taxpayer or a predecessor for which cost was or is claimed as basis and which was:

(a) Retired before the changeover date by the taxpayer or a predecessor, or

(b) Held on the changeover date by the taxpayer or a predecessor and also held as of the beginning of the day for which the equity capital is being determined; and

(ii) All depreciation applicable to the assets which enter into the computation and allowable under the terms-letter for all periods on and after the changeover date and before the taxable year for which the excess-profits credit is being computed.

(2) The adjustment required to be made by subparagraph (1)(i)*(a)* of this paragraph as of the beginning of the day for which the equity capital is being determined shall be made in accordance with the conditions and limitation described in paragraph (b)(2) of § 1.9001–2.

(3) For the determination of equity capital under section 437(c) of the Internal Revenue Code of 1939, see 26 CFR (1939) 40.437–5 (Regulations 130).

DEALER RESERVE INCOME ADJUSTMENT ACT OF 1960

§ 1.9002 Statutory provisions; Dealer Reserve Income Adjustment Act of 1960 (74 Stat. 124).

SECTION 1. *Short title.* This Act may be cited as the ''Dealer Reserve Income Adjustment Act of 1960''.

SEC. 2. *Persons to whom this Act applies.* This Act shall apply to any person who, for his most recent taxable year ending on or before June 22, 1959:

(1) Computed, or was required to compute, taxable income under an accrual method of accounting.

(2) Treated any dealer reserve income, which should have been taken into account (under the accrual method of accounting) for such taxable year, as accruable for a subsequent taxable year, and

(3) Before September 1, 1960, makes an election under section 3(a) or 4(a) of this Act.

SEC. 3. *Election to have section 481 apply—(a) General rule.* If:

(1) For the year of the change (determined under subsection (b)), the treatment of dealer reserve income by any person to whom this Act applies is changed to a method proper under the accrual method of accounting (whether or not such person initiated the change),

(2) Such person makes an election under this subsection, and

(3) Such person does not make the election provided by section 4(a),

then, for purposes of section 481 of the Internal Revenue Code of 1954, the change described in paragraph (1) shall be treated as a change in method of accounting not initiated by the taxpayer.

(b) *Year of change, etc.* In applying section 481 of the Internal Revenue Code of 1954 for purposes of this section, the ''year of the change'' in the case of any person is:

(1) Except as provided in paragraph (2), the first taxable year ending after June 22, 1959, or

(2) The earliest taxable year (whether the Internal Revenue Code of 1954 or the Internal Revenue Code of 1939 applies to such year) for which:

(A) On or before June 22, 1959:

(i) The Secretary of the Treasury or his delegate issued a notice of deficiency, or a written notice of a proposed deficiency, with respect to dealer reserve income, or

(ii) Such person filed with the Secretary or his delegate a claim for refund or credit with respect to dealer reserve income, and

(B) The assessment of any deficiency, or the refund or credit of any overpayment, whichever is applicable, was not, on June 21, 1959, prevented by the operation of any law or rule of law.

For purposes of this section, section 481 of such Code shall be treated as applying to any year of the change to which the Internal Revenue Code of 1939 applies.

SEC. 4. *Election to have section 481 not apply; payment in installments*—(a) *General rule.* If a person to whom this Act applies makes an election under this subsection, then for purposes of Chapter 1 of the Internal Revenue Code of 1954 (and the corresponding provisions of prior law) a change in the treatment of dealer reserve income to a method proper under the accrual method of accounting shall be treated as not a change in method of accounting in respect of which section 481 of the Internal Revenue Code of 1954 applies. Any election under this subsection shall apply to all taxable years ending on or before June 22, 1959 (whether the provisions of the Internal Revenue Code of 1954 or the corresponding provisions of prior law apply), for which the assessment of any deficiency, or for which refund or credit of any overpayment, whichever is applicable, was not, on June 21, 1959, prevented by the operation of any law or rule of law.

(b) *Election to pay tax in installments*—(1) *Eligibility.* If the net increase in tax (as defined in paragraph (2)) which results solely from the effect of the election provided by subsection (a) exceeds $2,500, then the taxpayer may elect (at the time the election is made under subsection (a)) to pay in two or more (but not to exceed 10) equal annual installments any portion of such net increase which (on the date of such election) is unpaid.

(2) *Net increase in tax defined.* For purposes of this section, the term ''net increase in tax'' means the amount (if any) by which:

(A) The sum of the increases in tax (including interest) for all taxable years to which the election applies and which is attributable to the election, exceeds

(B) The sum of the decreases in tax (including interest) for all taxable years to which the election applies and which is attributable to the election.

For purposes of this paragraph, interest for the period before the date of the election shall be computed as provided in Chapter 67 of the Internal Revenue Code of 1954 (or the corresponding provisions of prior revenue laws).

(c) *Due date for installments.* If an election is made under subsection (b), the first installment shall be paid on or before the date prescribed by section 6151(a) of the Internal Revenue Code of 1954 for payment of the tax for the taxable year in which the election was made, and each succeeding installment

shall be paid on or before the date which is one year after the date prescribed by this subsection for payment of the preceding installment.

(d) *Effect of subsequent redetermination of tax*—(1) *Redetermination*. If:

(A) The taxpayer makes an election under subsection (b), and

(B) There is a redetermination of the taxpayer's tax for any taxable year to which the election provided by subsection (a) applies,

then the net increase in tax (as defined in subsection (b)(2) shall be redetermined.

(2) *Effect of increase*. If the redetermination described in paragraph (1)(B) results in an increase in the net increase in tax (as defined in subsection (b)(2)), the resulting increase shall be prorated to ull the installments. The part of such resulting increase so prorated to any installment the date for payment of which has not arrived shall be collected at the same time as, and as a part of, such installment. The part of such resulting increase so prorated to any installment the date for payment of which has arrived shall be paid upon notice and demand from the Secretary of the Treasury or his delegate.

(3) *Effect of decrease*. For treatment of a decrease in the net increase in tax as the result of a redetermination described in paragraph (1)(B), see section 6403 of the Internal Revenue Code of 1954 (relating to overpayment of installment).

(e) *Suspension of interest*—(1) *In general*. If an election under subsection (a) applies and there is a net increase in tax (as defined in subsection (b)(2)), no interest shall be imposed on any underpayment (and no interest shall be paid on any overpayment) attributable to such election for the period beginning on the date of such election and ending on the date prescribed by section 6151(a) of the Internal Revenue Code of 1954 for payment of the tax for the taxable year in which the election was made.

(2) *No interest during installment period*. If an election under subsection (b) applies, no interest shall be imposed for the period on or after the date fixed for payment of the first installment unless payment of unpaid installments is accelerated under subsection (f) or (g).

(3) *Interest where payment is accelerated*. If payment is accelerated under subsection (f) or (g), interest determined in accordance with the provisions of section 6601 of the Internal Revenue Code of 1954 on the entire unpaid tax shall be payable:

(A) If payment is accelerated under subsection (f), from the date of notice and demand provided by such subsection to the date such tax is paid, or

(B) If payment is accelerated under subsection (g), from the date fixed for paying the unpaid installment to the date such tax is paid.

(f) *Termination of installment payment privilege*. The extension of time provided by this section for payment of tax shall cease to apply, and any unpaid installments shall be paid upon notice and demand from the Secretary of the Treasury or his delegate, if:

(1) In the case of a taxpayer who is an individual, he dies or ceases to engage in a trade or business,

(2) In the case of a taxpayer who is a partner, the entire interest of such partner is transferred or liquidated or the partnership terminates, or

(3) In the case of a taxpayer which is a corporation, the taxpayer ceases to engage in a trade or business, unless the unpaid portion of the tax payable in installments is required to be taken into account by the acquiring corporation under section 5(d).

(g) *Failure to pay installment*. If any installment under this section is not paid on or before the date fixed for its payment by this section (including any extension of time for payment of such installment), the unpaid installments shall be paid upon notice and demand from the Secretary of the Treasury or his delegate.

(h) *Suspension of running of periods of limitation*. The running of the periods of limitation provided by section 6502 of the Internal Revenue Code of 1954 (or corresponding provision of prior law) for the collection of any amount of tax payable in installments under this section shall be suspended for the period of any extension of time for payment granted under this section.

SEC. 5. *Definitions; special rules*—(a) *Dealer reserve income*. For purposes of this Act, the term ''dealer reserve income'' means:

(1) That part of the consideration derived by any person from the sale or other disposition of customers' sales contracts, notes, and other evidences of indebtedness (or derived from customers' finance charges connected with such sales or other dispositions) which is:

(A) Attributable to the sale by such person to such customers, in the ordinary course of his trade or business, of real property or tangible personal property, and

(B) Held in a reserve account, by the financial institution to which such person disposed of such evidences of indebtedness, for the purpose of securing obligations of such person or of such customers, or both; and

(2) That part of the consideration:

(A) Derived by any person from a sale described in paragraph (1)(A) in respect of which part or all of the purchase price of the property sold is provided by a financial institution to or for the customer to whom such property is sold, or

(B) Derived by such person from finance charges connected with the financing of such sale,

which is held in a reserve account by such financial institution for the purpose of securing obligations of such person or of such customer, or both.

(b) *Financial institution*. For purposes of this Act, the term ''financial institution'' means any person regularly engaged in the business of acquiring evidences of indebtedness of the kind described in subsection (a)(1), or of financing sales of the kind described in subsection (a)(2), or both.

(c) *Other terms; application of other laws*. Except where otherwise distinctly expressed or manifestly intended, terms used in this Act shall have the same meaning as when used in the Internal Revenue Code of 1954 and all provisions of law shall apply with respect to this Act as if this Act were a part of such Code.

(d) *Acquiring corporation*. In the case of the acquisition of assets of a corporation by another corporation in a distribution or transfer described in section 381(a) of the Internal Revenue Code of 1954, the acquiring corporation shall, for purposes of this Act, be treated as if it were the distributor or transferor corporation.

(e) *Statutes of limitations*—(1) *Extension of period for assessment and refund or credit*. For purposes of applying sections 3 and 4 of this Act, if the assessment of any deficiency, or the refund or credit of any overpayment, for any taxable year was not prevented on June 21, 1959, by the operation of any law or rule of law, but would be so prevented prior to September 1, 1961, the period within which such assessment, or such refund or credit, may be made shall not expire prior to September 1, 1961. An election by a taxpayer under section 3 or 4 of this Act shall be considered as a consent to the application of the provisions of this subsection.

(2) *Years closed by closing agreement or compromise*. For purposes of this Act, if the assessment of any deficiency, or the refund or credit of any overpayment, for any taxable year is prevented on the date of an election under section 3 or 4 of this Act by the operation of the provisions of Chapter 74 of the Internal Revenue Code of 1954 (relating to closing agreements and compromises) or by the corresponding provisions of the Internal Revenue Code of 1939, such assessment, or such refund or credit, shall be considered as having been prevented on June 21, 1959.

(f) *Regulations*. The Secretary of the Treasury or his delegate shall prescribe such regulations as may be necessary to carry out the purposes of this Act, including regulations relating to:

(1) The application of the provisions of this Act in the case of partnerships, and

(2) The manner in which the elections provided by this Act are to be made.

[T.D. 6490, 25 FR 8369, Sept. 1, 1960]

§ 1.9002–1 Purpose, applicability, and definitions.

(a) *In general*. The Dealer Reserve Income Adjustment Act of 1960 (74 Stat. 124) contains transitional provisions relating to adjustments to income resulting from a change in the income tax treatment of dealer reserve income. The purpose of the Act is to provide eligible taxpayers who elect to have its provisions apply with two alternatives for accounting for the adjustments to income resulting from a change to a proper method of reporting dealer reserve income. The Act also provides certain taxpayers with an election to pay in installments any net increase in tax. Eligible taxpayers must make any election under the provisions of the Act prior to September 1, 1960. If any election is made, then the applicable provisions of the Act and §§ 1.9002–1 to 1.9002–8, inclusive, shall apply.

(b) *Eligibility to elect*. In order to be eligible to make any of the elections provided by the Act, a taxpayer must have, for his most recent taxable year ending on or before June 22, 1959, (1) computed, or been required to compute, taxable income under an accrual method of accounting, and (2) treated dealer reserve income (or portions thereof) which should have been taken into account (under the accrual method of accounting) for such most recent taxable year as accruable for a subsequent taxable year. Thus, the elections provided by the Act are not available to a person who, for his most recent taxable year ending on or before June 22, 1959, reported dealer reserve income under a method proper under the accrual method of accounting or who was not required to compute taxable income under the accrual method of accounting. An election may be made even though the taxpayer is litigating his liability for income tax based upon his treatment of dealer reserve income, whether in The Tax Court of the United States or any other court, and an election filed by a taxpayer who is litigating his liability for income tax based upon his treatment of dealer reserve income does not constitute a waiver of his right to continue pending litigation until final judicial determination. He must, however, comply

with the provisions of the Act and the regulations thereunder.

(c) *Definitions*. For purposes of the Act and §§ 1.9002–1 to 1.9002–8, inclusive:

(1) *The Act*. The term *the Act* means the Dealer Reserve Income Adjustment Act of 1960 (74 Stat. 124).

(2) *Dealer reserve income*. The term *dealer reserve income* means:

(i) That part of the consideration derived by any person from the sale or other disposition of customers' sales contracts, notes, and other evidences of indebtedness (or derived from customers' finance charges connected with such sales or other dispositions) which is:

(a) Attributable to the sale by such person to such customers, in the ordinary course of his trade or business, of real property or tangible personal property, and

(b) Held in a reserve account, by the financial institution to which such person disposed of such evidences of indebtedness, for the purpose of securing obligations of such person or of such customers, or both; and

(ii) That part of the consideration:

(a) Derived by any person from a sale described in subdivision (i)*(a)* of this subparagraph in respect of which part or all of the purchase price of the property sold is provided by a financial institution to or for the customer to whom such property is sold, or

(b) Derived by such person from finance charges connected with the financing of such sale, which is held in a reserve account by such financial institution for the purpose of securing obligations of such person or of such customer, or both. Thus, the term includes amounts held in a reserve account by a financial institution in transactions in which the customer becomes obligated to the institution as well as such amounts so held by a financial institution in transactions in which the taxpayer is the obligee on the contract, note, or other evidence of indebtedness. For purposes of the definition of the term ''dealer reserve income'' it is immaterial whether or not the taxpayer guarantees the customer's obligation in excess of the reserve retained by the financial institution. The term does not include the consideration derived from transactions relating to the sale of intangible property such as stocks, bonds, copyrights, patents, etc. Further, the term does not include consideration derived by the taxpayer from transactions relating to the sale of property by a person not the taxpayer or to casual sales of property not in the ordinary course of the taxpayer's trade or business.

(3) *Financial institution*. The term *financial institution* means any person regularly engaged in the business of acquiring evidences of indebtedness of the kind described in section 5(a)(1) of the Act, or of financing sales of the kind described in section 5(a)(2) of the Act, or both. It thus includes banking institutions, finance companies, building and loan associations, and other similar type organizations, as well as an individual or partnership regularly engaged in the described business.

(4) *Taxpayer*. The term *taxpayer* means any person to whom the Act applies.

(5) *Other terms*. All other terms which are not specifically defined shall have the same meaning as when used in the Code except where otherwise distinctly expressed or manifestly intended.

[T.D. 6490, 25 FR 8371, Sept. 1, 1960]

§ 1.9002–2 Election to have the provisions of section 481 of the Internal Revenue Code of 1954 apply.

(a) *In general*. Section 3(a) of the Act provides that if the income tax treatment of dealer reserve income by the taxpayer is changed (whether or not such change is initiated by the taxpayer) to a proper method under the accrual method of accounting, then the taxpayer may elect to have such change treated as a change in method of accounting not initiated by the taxpayer to which the provisions of section 481 of the Code apply. This election may be made only when the alternative election under section 4(a) of the Act has not been exercised.

(b) *Year of change*. Where an election has been made under section 3(a) of the Act to have section 481 of the Code apply, then for purposes of applying section 481 of the Code the year of change shall be determined in accordance with the provisions of section 3(b) of the Act. Section 3(b) provides that the year of change is the earlier of (1)

the first taxable year ending after June 22, 1959, or (2) the earliest taxable year for which, on or before June 22, 1959,

(i) There was issued a notice of deficiency or written notice of a proposed deficiency attributable to the erroneous treatment of dealer reserve income, or

(ii) The taxpayer filed a claim for refund or credit with respect to the treatment of such income,

and in respect of which the assessment of any deficiency, or the refund or credit of any overpayment, was not prevented on June 21, 1959, by the operation of any law or rule of law. The written notice of proposed deficiency includes a 15- or 30-day letter issued under established procedure or other similar written notification.

(c) *Application to pre-1954 Code years.* If the earliest year described in paragraph (b) of this section is a year subject to the Internal Revenue Code of 1939 in respect of which assessment of any deficiency or refund or credit of any overpayment was not prevented on June 21, 1959, by the operation of any law or rule of law, section 481 of the Internal Revenue Code of 1954 shall be treated as applying in the same manner it would have applied had it been enacted as part of the Internal Revenue Code of 1939.

(d) *Examples.* The operation of this section in determining the year of change may be illustrated by the following examples:

Example (1). D, a taxpayer on the calendar year basis who employs the accrual method of accounting, voluntarily changed to the proper method of accounting for dealer reserve income for the taxable year 1959. A statutory notice of deficiency, however, was issued prior to June 23, 1959, relating to the erroneous treatment of such income for the taxable year 1956, which was the earliest taxable year in respect of which assessment of a deficiency or credit or refund of an overpayment was not prevented on June 21, 1959. Prior to September 1, 1960, D properly exercises his election under section 3 of the Act to have the change in the treatment of dealer reserve income treated as a change in method of accounting not initiated by the taxpayer to which section 481 of the Code applies. Under these facts, 1956 is the year of the change for purposes of applying section 481. Accordingly, the net amount of any adjustment found necessary as a result of the change in the treatment of dealer reserve income which is attributable to taxable years subject to the 1954 Code shall be taken into account for the year of change in accordance with section 481. The net amount of the adjustments attributable to pre-1954 Code years is to be disregarded. The income of each taxable year succeeding the year of change in respect of which the assessment of any deficiency or refund or credit of any overpayment is not prevented will be recomputed under the proper method of accounting initiated by the change.

Example (2). Assume the same facts as set forth in example (1), except that no notice of a proposed deficiency of any type has been issued, and assume further that no claim for refund has been filed. Since there was no earlier year open on June 21, 1959, for which the taxpayer either was notified of a proposed deficiency attributable to the erroneous treatment of dealer reserve income or for which he had filed a claim for refund or credit with respect to the treatment of such income, the year of change is 1959, the first taxable year ending after June 22, 1959. Accordingly, the net amount of any adjustment found necessary as a result of the change in the treatment of dealer reserve income which is attributable to taxable years subject to the 1954 Code shall be taken into account for the year of the change in accordance with section 481. The net amount of the adjustments attributable to pre-1954 Code years is to be disregarded.

Example (3). Assume the same facts as set forth in example (1), except that a refund claim specifying adjustments relative to dealer reserve income was timely filed for the taxable year 1951, which was the earliest taxable year for which a refund or credit of an overpayment or assessment of a deficiency was not prevented on June 21, 1959. Under this factual situation, the year of change for purposes of applying section 481 would be 1951. Section 481 would be applied to 1951 and be given effect for that year in the same manner as it would have applied had it been enacted as a part of the 1939 Code and as if the change to the proper method of accounting had not been initiated by the taxpayer. Any adjustment with regard to dealer reserve income attributable to pre-1951 years is disregarded. The income of each taxable year succeeding the year of change in respect of which the assessment of any deficiency or refund or credit of any overpayment is not prevented will be recomputed under the proper method of accounting initiated by the change.

[T.D. 6490, 25 FR 8371, Sept. 1, 1960]

§ 1.9002–3 Election to have the provisions of section 481 of the Internal Revenue Code of 1954 not apply.

Section 4(a) of the Act provides that in the treatment of dealer reserve income by the taxpayer is changed to a method proper under the accrual method of accounting, then the taxpayer may elect to have such change treated as not a change in method of accounting to which the provisions of section 481 of the Internal Revenue Code of 1954 apply. This election shall apply to all taxable years ending on or before June 22, 1959, for which the assessment of any deficiency, or for which refund or credit of any overpayment, was not prevented on June 21, 1959, by the operation of any law or rule of law. This election may be made only if the alternative election under section 3(a) of the Act has not been exercised. If an election is made under section 4(a) of the Act, taxable income (or net income in the case of a taxable year to which the Internal Revenue Code of 1939 applies) shall be recomputed under a proper method of accounting for dealer reserve income for each taxable year to which the election applies, without regard to section 481.

[T.D. 6490, 25 FR 8372, Sept. 1, 1960]

§ 1.9002–4 Election to pay net increase in tax in installments.

(a) *Election*. If an election is made under section 4(a) of the Act and if the net increase in tax determined in accordance with paragraph (b) of this section exceeds $2,500, the taxpayer may also make an election under section 4(b) of the Act prior to September 1, 1960, to pay any portion of such net increase in tax, unpaid on the date of the election, in 2 or more, but not to exceed 10, equal annual installments. If the taxpayer making the election under section 4(a) of the Act is a partnership or a small business corporation electing under Subchapter S, Chapter 1 of the Code, the determination as to whether the net increase in tax exceeds $2,500 shall be made separately as to each partner or shareholder, respectively, with regard to his individual liability. Thus, if a partnership makes an election under section 4(a) of the Act, and partners A and B had a net increase in tax of $3,000 and $2,000, respectively, as a result of dealer reserve income adjustments to partnership income, partner A may elect under section 4(b) of the Act to pay the net increase in 2 or more, but not exceeding 10, equal annual installments to the extent that such tax was unpaid on the date of the election. Partner B may not make the election since his net increase in tax does not exceed $2,500.

(b) *Net increase in tax*. (1) The term ''net increase in tax'' means the amount by which the sum of the increases in tax (including interest) for all taxable years to which the election under section 4(a) of the Act applies and which is attributable to the election exceeds the sum of the decreases in tax (including interest) for all taxable years to which the election under such section applies and which is attributable to the election.

(2) In determining the net increase in tax, the tax and interest for each taxable year to which the election applies is computed by taking into account all adjustments necessary to reflect the change to the proper treatment of dealer reserve income. If the computation results in additional tax for a taxable year, then interest is computed under section 6601 of the Code (or corresponding provisions of prior law) on such additional tax for the taxable year involved from the last date prescribed for payment of the tax for such taxable year to the date the election is made. The interest so computed is then added to the additional tax determined for such taxable year. The sum of these two items (tax plus interest) represents the increase in tax for such taxable year. If the computation of the tax after taking into account the appropriate dealer reserve income adjustments results in a reduction in tax for any taxable year to which the election applies, interest under section 6611 of the Code (or corresponding provisions of prior law) is computed from the date of the overpayment of the tax for such year to the date of the election. The amount of the interest so computed is then added to the reduction in tax to determine the total decrease in tax for such year. The net increase in tax is then determined by adding together the total increases in tax for each year to which the election applies and from

the resulting total subtracting the sum of the total decreases in tax for each year. If the total increases in tax for all such years do not exceed the total decreases in tax, there is no net increase in tax for purposes of section 4(b) of the Act. For purposes of determining the net increase in tax, net operating losses affecting the computation of tax for any prior taxable year not otherwise affected shall be taken into account.

(c) *Time for paying installments.* If the election under this section is made to pay the unpaid portion of the net increase in tax in installments, the first installment shall be paid on or before the date prescribed by section 6151(a) of the Code for payment of the tax for the taxable year in which such election is made. Each succeeding installment shall be paid on or before the date which is one year after the date prescribed for the payment of the preceding installment.

(d) *Termination of installment privilege*—(1) *For nonpayment of installment.* The extension of time provided by section 4(b) of the Act for payment of the net increase in tax in installments shall terminate, and any unpaid installments shall be paid upon notice and demand from the district director if any installment under such section is not paid by the taxpayer on or before the date fixed for its payment, including any extension of time for payment of any such installment.

(2) *For other reasons.* The extension of time provided by section 4(b) of the Act for payment of the net increase in tax in installments shall terminate, and any unpaid installments shall be paid upon notice and demand from the district director if:

(i) In the case of an individual, he dies or ceases to engage in any trade or business,

(ii) In the case of a partner, his entire interest in the partnership is transferred or liquidated or the partnership terminates, or

(iii) In the case of a corporation, it ceases to engage in a trade or business, unless the unpaid portion of the tax payable in installments is required to be taken into account by an acquiring corporation under section 5(d) of the Act.

The installment privilege is not terminated under this subparagraph even though the taxpayer terminates the trade or business in respect of which the dealer reserve income is attributable provided the taxpayer continues in a trade or business. Further, the privilege is not terminated by a transfer of a part of a partnership interest so long as the partner retains any interest in the partnership. Also, the privilege is not terminated by a transaction falling within the provisions of section 381(a) of the Code if, under section 5(d) of the Act, the acquiring corporation is required to take into account the unpaid portion of the net increase in tax. In such a case the privilege may be continued by the acquiring corporation in the same manner and under the same conditions as though it were the distributor or transferor corporation.

(e) *Redetermination of tax subsequent to exercise of installment election.* Section 4(d) of the Act provides that where a taxpayer has elected to pay the net increase in tax in installments and thereafter it becomes necessary to redetermine the taxpayer's tax for any taxable year to which the election provided by section 4(a) of the Act applies, then the net increase in tax shall be redetermined. Where the redetermination does not involve adjustments affecting the treatment of dealer reserve income, then the net increase in tax previously computed will not be disturbed. The net increase in tax is limited to the amount of tax computed under section 4(b)(2) of the Act as a result of the change in treatment accorded dealer reserve income. If the redetermination of tax for any taxable year to which the election applies results in an addition to the net increase in tax previously computed, then such addition shall be prorated to all of the installments whether paid or unpaid. The part of the addition, prorated to installments which are not yet due, shall be collected at the same time as, and as a part of, such installments. The part of the addition prorated to installments, the time for payment of which has arrived, shall be paid upon notice and demand from the district director. Under section 4(g) of the Act, failure to make such payment within 10 days

after issuance of notice and demand will terminate the installment privilege. The imposition of interest on the addition to the net increase in tax as a result of the redetermination will be determined in the same manner as interest on the previously computed net increase in tax. Thus, no interest will be imposed on the amount of the addition to the net increase in tax prorated to installments not yet due unless the installment privilege is terminated under subsection (f) or (g) of section 4 of the Act. If a reduction in the net increase in tax results from a redetermination of tax for any taxable year to which the election applies, the entire amount of such reduction shall, in accordance with the provisions of section 6403 of the Code (relating to overpayment of installments), be prorated to the installments which are not yet due, resulting in a pro rata reduction in each of such installments. Where the redetermination does not involve adjustments pertaining to dealer reserve income, then any resulting deficiency pertaining to the year to which the election applies will be assessed and collected, in accordance with the applicable provisions of the Code (or corresponding provisions of prior law) without regard to any election made under the Act.

(f) *Periods of limitation*. Section 4(h) of the Act provides that where there is an extension of time for payment of tax under the provisions of section 4(b) of the Act, the running of the periods of limitation provided by section 6502 of the Code (or corresponding provisions of prior law) for collection of such tax is suspended for the period of time for which the extension is granted.

[T.D. 6490, 25 FR 8372, Sept. 1, 1960]

§ 1.9002–5 Special rules relating to interest.

(a) *In general*. Where an election is made under section 4(a) of the Act interest is computed under section 6601 of the Code (or corresponding provisions of prior law) on any increase in tax attributable to such election for each taxable year involved for the period from the last date prescribed for payment of the tax for such year (determined without regard to any extensions of time for filing the return) through the date preceding the date on which the election is made. Where the election under section 4(a) of the Act results in a decrease in tax for any year to which the election applies, interest is computed in accordance with section 6611 of the Code (or corresponding provisions of prior law) from the date of overpayment through the date preceding the date on which the election is made. Where there is a net increase in tax as a result of the election under section 4(a) of the Act, no interest shall be imposed on any underpayment (and no interest shall be paid on any overpayment) attributable to the dealer reserve income adjustment for any year to which the election applies for the period commencing with the date such election is made and ending on the date prescribed for filing the return (determined without regard to extensions of time) for the taxable year in which the election is made. This rule applies regardless of whether the election under section 4(b) of the Act is made. If there is no net increase in tax, interest on any underpayment or overpayment attributable to the dealer reserve income adjustment for any taxable year to which the election applies for the period commencing with the date of the election shall be determined in accordance with §§ 301.6601–1 and 301.6611–1 of this chapter (Regulations on Procedure and Administration).

(b) *Installment period*—(1) *Where payment is not accelerated*. If the election under section 4(b) of the Act is made to pay the net increase in tax in installments, no interest will be imposed on such net increase in tax for the period beginning with the due date fixed under section 4(c) of the Act for the first installment payment and ending with the date fixed under such section for the last installment payment unless payment of the unpaid installments is accelerated under other provisions of the Act. See subsections (f) and (g) of section 4 of the Act.

(2) *Where payment is accelerated*. Where payment of the unpaid installments is accelerated because of the termination of the installment privilege, interest will be computed under section 6601 of the Code on the entire unpaid

net increase in tax for the applicable period set forth below:

(i) In the case of acceleration under section 4(f) of the Act for reasons other than nonpayment of an installment, from the date of the notice and demand for payment of the unpaid tax to the date of payment; or

(ii) In the case of acceleration under section 4(g) of the Act for nonpayment of an installment, from the date fixed for payment of the installment to the date of payment.

When payment is accelerated under section 4(f) of the Act, however, no interest will be charged where payment of the unpaid installments is made within 10 days of issuance of the notice and demand for such payment.

[T.D. 6490, 25 FR 8373, Sept. 1, 1960]

§ 1.9002–6 Acquiring corporation.

Section 5(d) of the Act provides that for purposes of such Act in the case of the acquisition of the assets of a corporation by another corporation in a distribution or transfer described in section 381(a) of the Code the acquiring corporation shall be treated as if it were the distributor or transferor corporation.

[T.D. 6490, 25 FR 8373, Sept. 1, 1960]

§ 1.9002–7 Statute of limitations.

(a) *Extension of period for assessment and refund or credit.* Under section 5(e) of the Act, if an election is made to have the Act apply, and if the assessment of any deficiency, or the refund or credit of any overpayment attributable to the election, for any taxable year to which the Act applies was not prevented on June 21, 1959, by the operation of any law or rule of law (except as provided in paragraph (b) of this section, relating to closing agreements and compromises), but would be so prevented prior to September 1, 1961, the period within which such assessment, or such refund or credit, may be made with respect to such taxable year shall not expire prior to September 1, 1961. An election under either section 3 or 4 of the Act will be considered to be a consent to the extension of the period of limitation for purposes of assessment for any year to which the Act applies. Thus, for example, if, as the result of an election under section 4(a) of the Act, assessment of a deficiency for the taxable year 1955 was not prevented by the statute of limitations, a judicial decision that had become final, or otherwise, on June 21, 1959, but would (except for section 5(e) of the Act) be prevented on a later date, as for instance September 1, 1959, then for purposes of applying section 4 of the Act, assessment may be made at any time prior to September 1, 1961, with respect to such year if the taxpayer made an election under the Act prior to September 1, 1960. Section 5(e) of the Act will, in no event, operate to shorten the period of limitation otherwise applicable with respect to any taxable year.

(b) *Years closed by closing agreement or compromise.* For purposes of the Act, if the assessment of any deficiency or a refund or credit of any overpayment for any taxable year was not prevented on June 21, 1959, but is prevented on the date of an election under section 3 or 4 of the Act by the operation of the provisions of chapter 74 of the Code (relating to closing agreements and compromises), assessment, refund, or credit will, nevertheless, be considered as being prevented on June 21, 1959.

[T.D. 6490, 25 FR 8373, Sept. 1, 1960]

§ 1.9002–8 Manner of exercising elections.

(a) *By whom election is to be made*—(1) *In general.* Generally, the taxpayer to whom the Act applies will exercise the elections provided therein. In the case of a partnership or a corporation electing under the provisions of subchapter S, chapter 1 of the Code, the election shall be exercised by the persons specified in subparagraphs (2) and (3) of this paragraph, respectively.

(2) *Partnerships.* In the case of a partnership, the election under section 3 or 4(a) of the Act shall be exercised by the partnership. If an election is made by the partnership under section 4(a) of the Act, any election under section 4(b) of the Act to pay the net increase in tax in installments shall be made by each partner separately. The determination as to whether the net increase in tax resulting from the election under section 4(a) of the Act exceeds $2,500 shall be made with reference to the increase or decrease in

the tax of each partner attributable to the adjustment to his distributive share of the partnership income resulting from the election.

(3) *Subchapter S corporations.* In the case of an electing small business corporation under subchapter S, chapter 1 of the Code, the election under section 3 or 4(a) of the Act shall be made by such corporation. An election under section 4(b) of the Act to pay the net increase in tax in installments shall, to the extent the net increase in tax resulting from the election is attributable to adjustments to income for taxable years for which the corporation was not an electing small business corporation, be made by the corporation. The determination as to whether the net increase in tax for such taxable years exceeds $2,500 shall be made with reference to the increase or decrease in tax of the corporation. Any election under section 4(b) of the Act to pay the net increase in tax in installments shall, to the extent the increase in tax is attributable to years for which the corporation was an electing small business corporation, be made by the shareholders separately. The determination in such a case as to whether the net increase in tax for such taxable years exceeds $2,500 shall be made with reference to the increases or decreases in the tax of each shareholder attributable to the adjustments to taxable income of the electing small business corporation resulting from the election.

(b) *Time and manner of making elections*—(1) *In general.* Any election made under the Act shall be made by the taxpayers described in paragraph (a) of this section before September 1, 1960, by filing a statement with the district director with whom such taxpayer's income tax return for the taxable year in which the election is made is required to be filed. A copy of the statement of election shall be attached to and filed with such taxpayer's income tax return for such taxable year.

(2) *Election to have section 481 apply.* An election under section 3 of the Act shall be made in the form of a statement which shall include the following:

(i) A clear indication that an election is being made under section 3 of the Act;

(ii) Information sufficient to establish eligibility to make the election; and

(iii) The year of change as defined in section 3(b) of the Act.

An amended income tax return reflecting the increase or decrease in tax attributable to the election shall be filed for the year of change together with schedules showing how the tax was recomputed under section 481 of the Code. If income tax returns have been filed for any taxable years subsequent to the year of change, amended returns reflecting the proper treatment of dealer reserve income for such years shall also be filed. In the case of partnerships and electing small business corporations under subchapter S, chapter 1 of the Code, amended returns shall be filed by the partnership or electing small business corporation, as well as by the partners or shareholders, as the case may be. Any amended return shall be filed with the office of the district director with whom the taxpayer files his income tax return for the taxable year in which the election is made and, if practicable, on the same date the statement of election is filed, but amended returns shall be filed in no event later than November 30, 1960, unless an extension of time is granted under section 6081 of the Code. Whenever the amended returns do not accompany the statement of election, a copy of the statement shall be submitted with the amended returns.

(3) *Election not to have section 481 apply.* An election under section 4(a) of the Act shall be made in the form of a statement which shall include the following:

(i) A clear indication that an election is being made under section 4(a) of the Act;

(ii) Information sufficient to establish eligibility to make the election; and

(iii) The taxable years to which the election applies.

Amended income tax returns reflecting the increase or decrease in tax attributable to the election shall be filed for the taxable years to which the election applies. If income tax returns have been filed for any subsequent taxable years, amended returns reflecting the

proper treatment of dealer reserve income for such years shall also be filed. In the case of partnerships and electing small business corporations under subchapter S, chapter 1 of the Code, amended returns shall be filed by the partnership or electing small business corporation, as well as by the partners or shareholders, as the case may be. Any amended return shall be filed with the office of the district director with whom the taxpayer files his income tax return for the taxable year in which the election is made and, if practicable, on the same date the statement of election is filed, but amended returns shall be filed in no event later than November 30, 1960, unless an extension of time is granted under section 6081 of the Code. Whenever the amended returns do not accompany the statement of election, a copy of the statement shall be submitted with the amended return.

(4) *Election to pay tax in installments.* (i) Except as otherwise provided in subdivision (ii) of this subparagraph, if the taxpayer making the election under section 4(a) of the Act also desires to make the election under section 4(b) of the Act to pay the increase in tax in installments, then the statement of election shall include the following additional information:

(a) A clear indication that an election is also being made under section 4(b) of the Act;

(b) A summary of the total increases and decreases in tax, together with interest thereon, in sufficient detail to establish eligibility to make the election; and

(c) The number of annual installments in which the taxpayer elects to pay the net increase in tax.

(ii) Where a partnership or electing small business corporation under subchapter S, chapter 1 of the Code, has made an election under section 4(a) of the Act, and any partner or shareholder, as the case may be, desires to make an election under section 4(b) of the Act, a statement of election shall be filed by such partner or shareholder containing the following information:

(a) A clear indication that an election is being made under section 4(b) of the Act;

(b) A summary of the total increases and decreases in tax, together with interest thereon, of such partner or shareholder in sufficient detail to establish eligibility to make the election;

(c) The number of annual installments in which the partner or shareholder elects to pay the net increase in tax; and

(d) The office of the district director and the date on which the election under section 4(a) of the Act was filed by such partnership or corporation.

The statement of election under section 4(b) of the Act shall be accompanied by a copy of the statement of election under section 4(a) of the Act made by the partnership or electing small business corporation under subchapter S, chapter 1 of the Code, as the case may be.

(c) *Effect of election.* An election made under section 3 or 4 of the Act shall become irrevocable on September 1, 1960, and shall be binding on the taxpayer for all taxable years to which it applies.

[T.D. 6490, 25 FR 8373, Sept. 1, 1960]

PUBLIC DEBT AND TAX RATE EXTENSION ACT OF 1960

AUTHORITY: Sections 1.9003 to 1.9003–5 issued under sec. 302(c), 74 Stat. 292, as amended; 26 U.S.C. 613 note.

§ 1.9003 Statutory provisions; section 4 of the Act of September 14, 1960 (Pub. L. 86–781, 74 Stat. 1017).

SEC. 4. Subsection (c) of section 302 of the Public Debt and Tax Rate Extension Act of 1960 (Pub. L. 86–564; 74 Stat. 293) is amended to read as follows:

(c) *Effective date*—(1) *In general.* Except as provided in paragraph (2), the amendments made by subsections (a) and (b) shall be applicable only with respect to taxable years beginning after December 31, 1960.

(2) *Calcium carbonates, etc.*—(A) *Election for past years.* In the case of calcium carbonates or other minerals when used in making cement, if an election is made by the taxpayer under subparagraph (C):

(i) The amendments made by subsection (b) shall apply to taxable years with respect to which such election is effective, and

(ii) Provisions having the same effect as the amendments made by subsection (b) shall be deemed to be included in the Internal Revenue Code of 1939 and shall apply to taxable years with respect to which such election is effective in lieu of the corresponding provisions of such Code.

(B) *Years to which applicable.* An election made under subparagraph (C) to have the provisions of this paragraph apply shall be effective for all taxable years beginning before January 1, 1961, in respect of which:

(i) The assessment of a deficiency,

(ii) The refund or credit of an overpayment, or

(iii) The commencement of a suit for recovery of a refund under section 7405 of the Internal Revenue Code of 1954,

is not prevented on the date of the enactment of this paragraph by the operation of any law or rule of law. Such election shall also be effective for any taxable year beginning before January 1, 1961, in respect of which an assessment of a deficiency has been made but not collected on or before the date of the enactment of this paragraph.

(C) *Time and manner of election.* An election to have the provisions of this paragraph apply shall be made by the taxpayer on or before the 60th day after the date of publication in the FEDERAL REGISTER of final regulations issued under authority of subparagraph (F), and shall be made in such form and manner as the Secretary of the Treasury or his delegate shall prescribe by regulations. Such election, if made, may not be revoked.

(D) *Statutes of limitation.* Notwithstanding any other law, the period within which an assessment of a deficiency attributable to the application of the amendments made by subsection (b) may be made with respect to any taxable year to which such amendments apply under an election made under subparagraph (C), and the period within which a claim for refund or credit of an overpayment attributable to the application of such amendments may be made with respect to any such taxable year, shall not expire prior to one year after the last day for making an election under subparagraph (C). An election by a taxpayer under subparagraph (C) shall be considered as a consent to the application of the provisions of this subparagraph.

(E) *Terms; applicability of other laws.* Except where otherwise distinctly expressed or manifestly intended, terms used in this paragraph shall have the same meaning as when used in the Internal Revenue Code of 1954 (or corresponding provisions of the Internal Revenue Code of 1939) and all provisions of law shall apply with respect to this paragraph as if this paragraph were a part of such Code (or corresponding provisions of the Internal Revenue Code of 1939).

(F) *Regulations.* The Secretary of the Treasury or his delegate shall prescribe such regulations as may be necessary to carry out the provisions of this paragraph.

[T.D. 6492, 25 FR 8904, Sept. 16, 1960]

§ 1.9003–1 Election to have the provisions of section 613(c) (2) and (4) of the 1954 Code, as amended, apply for past years.

(a) *In general.* Section 4 of the Act of September 14, 1960 (Pub. L. 86–781, 74 Stat. 1017), amended section 302(c) of the Public Debt and Tax Rate Extension Act of 1960 to permit certain taxpayers for taxable years beginning before January 1, 1961, to apply the provisions of section 302(b) of that Act. Section 302(b) of the Act amended section 613(c) (2) and (4) of the Internal Revenue Code of 1954 to read in part as follows:

SEC. 613. *Percentage Depletion.* * * *

(c) *Definition of gross income from property.* For purposes of this section:

* * * * *

(2) *Mining.* The term ''mining'' includes not merely the extraction of the ores or minerals from the ground but also the treatment processes considered as mining described in paragraph (4) (and the treatment processes necessary or incidental thereto), and so much of the transportation of ores or minerals (whether or not by common carrier) from the point of extraction from the ground to the plants or mills in which such treatment processes are applied thereto as is not in excess of 50 miles unless the Secretary or his delegate finds that the physical and other requirements are such that the ore or mineral must be transported a greater distance to such plants or mills.

* * * * *

(4) *Treatment processes considered as mining.* The following treatment processes where applied by the mine owner or operator shall be considered as mining to the extent they are applied to the ore or mineral in respect of which he is entitled to a deduction for depletion under section 611:

* * * * *

(F) In the case of calcium carbonates and other minerals when used in making cement—all processes (other than preheating of the kiln feed) applied prior to the introduction of the kiln feed into the kiln, but not including any subsequent process;

(b) *Election.* Under section 302(c)(2) of the Act, the taxpayer, in the case of calcium carbonates or other minerals when used by him in making cement, may elect to apply the provisions of section 613(c) (2) and (4) of the

1954 Code as amended in lieu of the corresponding provisions of prior law. The taxpayer must make the election in accordance with § 1.9003–4 on or before November 15, 1960, and the election shall become irrevocable on November 15, 1960.

(c) *Years to which the election is applicable.* If the election described in paragraph (b) of this section is made by the taxpayer, the provisions of section 613(c) (2) and (4) as amended by section 302(b) of the Act apply to all taxable years beginning before January 1, 1961, in respect of which:

(1) The assessment of any deficiency,

(2) Refund or credit of any overpayment,

(3) Commencement of a suit for recovery of a refund under section 7405 of the Internal Revenue Code of 1954,

is not prevented on September 14, 1960, by the operation of any law or rule of law. The election also applies to taxable years beginning before January 1, 1961, in respect of which an assessment of a deficiency has been made but not collected on or before September 14, 1960.

[T.D. 6492, 25 FR 8905, Sept. 16, 1960]

§ 1.9003–2 Effect of election.

(a) *In general.* If a taxpayer makes the election described in paragraph (b) of § 1.9003–1, he shall be deemed to have consented to the application of section 302(b) of the Act with respect to all taxable years to which the election applies. Thus, subparagraph (F) of section 613(c)(4) of the Internal Revenue Code of 1954 as amended must be applied in determining gross income from mining for the taxable years to which the election applies (including years subject to the Internal Revenue Code of 1939) whether or not the taxpayer is litigating the issue. Further, the election shall apply to all calcium carbonates or other minerals mined and used by the taxpayer in making cement.

(b) *Effect on gross income from mining.* The election is only determinative of what constitutes ''mining'' for purposes of computing percentage depletion and has no effect on the method employed in determining the amount of gross income from mining. In applying the election to the years affected there shall be taken into account the effect that any adjustments resulting from the election shall have on other items affected thereby, such as charitable contributions, foreign tax credit, net operating loss, and the effect that adjustments to any such items shall have on other taxable years. The provisions of section 302(b) of the Act are applicable with respect to taxable years subject to the Internal Revenue Code of 1939 for purposes of applying sections 450 and 453 of that Code.

[T.D. 6492, 25 FR 8905, Sept. 16, 1960]

§ 1.9003–3 Statutes of limitation.

Under section 302(c)(2) of the Act, the period within which the assessment of any deficiency or the credit or refund of any overpayment attributable to the election may be made shall not expire sooner than 1 year after November 15, 1960. Thus, if assessment of a deficiency or credit or refund of an overpayment, whichever is applicable, is not prevented on September 14, 1960, the time for making assessment or credit or refund shall not expire for at least 1 year after November 15, 1960, notwithstanding any other provision of law to the contrary. Even though assessment of a deficiency is prevented on September 14, 1960, if commencement of a suit for recovery of a refund under section 7405 of the Code may be made on such date, then any deficiency resulting from the election may be assessed at any time within 1 year after November 15, 1960. If the taxpayer makes the election he shall be deemed to have consented to the application of the provisions of section 302(c)(2) of the Act extending the time for assessing a deficiency attributable to the election. Section 302(c)(2) of the Act does not shorten the period of limitations otherwise applicable. An agreement may be entered into under section 6501(c)(4) of the Code and corresponding provisions of prior law to extend the period for assessment.

[T.D. 6492, 25 FR 8905, Sept. 16, 1960]

§ 1.9003–4 Manner of exercising election.

(a) *By whom election is to be made.* Generally, the taxpayer whose tax liability is affected by the election shall make the election. In the case of a partnership, or a corporation electing under the provisions of subchapter S, chapter 1 of the Code, the election shall be exercised by the partnership or such corporation, as the case may be.

(b) *Time and manner of making election.* The election shall be made on or

before November 15, 1960, by filing a statement with the district director with whom the taxpayer's income tax return for the taxable year in which the election is made is required to be filed. The statement shall include the following:

(1) A clear indication that an election is being made under section 302(c)(2) of the Act, and

(2) The taxable years to which the election applies.

Amended income tax returns reflecting any increase or decrease in tax attributable to the election shall be filed for the taxable years to which the election applies. In the case of partnerships and electing small business corporations under subchapter S, chapter 1 of the Code, amended returns shall be filed by the partnership or electing small business corporations, as well as by the partners or shareholders, as the case may be. Any amended return shall be filed with the office of the district director with whom the taxpayer files his income tax return for the taxable year in which the election is made and, if practicable, on the same date the statement of election is filed, but amended returns shall be filed in no event later than February 28, 1961, unless an extension of time is granted under section 6081 of the Code. Whenever the amended returns do not accompany the statement of election, a copy of the statement shall be submitted with the amended returns. The amended returns shall be accompanied by payment of the additional tax (together with interest thereon) resulting from the election.

[T.D. 6492, 25 FR 8905, Sept. 16, 1960]

§ 1.9003–5 Terms; applicability of other laws.

All other terms which are not otherwise specifically defined shall have the same meaning as when used in the Code (or the corresponding provisions of prior law) except where otherwise distinctly expressed or manifestly intended to the contrary. Further, all provisions of law contained in the Code (or the corresponding provisions of prior law) shall apply to the extent that they can apply. Thus, all of the provisions of subtitle F of the Code and the corresponding provisions of prior law shall apply to the extent they can apply, including the provisions of law relating to assessment, collection, credit or refund, and limitations. For purposes of this section and §§ 1.9003–1 to 1.9003–4, inclusive, the term ''Act'' means the Public Debt and Tax Rate Extension Act of 1960 as amended (74 Stat. 293, 1018).

[T.D. 6492, 25 FR 8905, Sept. 16, 1960]

CERTAIN BRICK AND TILE CLAY, FIRE CLAY, AND SHALE; REGULATIONS UNDER THE ACT OF SEPTEMBER 26, 1961

§ 1.9004 Statutory provisions; the Act of September 26, 1961 (Pub. L. 87–312, 75 Stat. 674).

Be it enacted by the Senate and House of Representatives of the United States of America in Congress assembled, That (a) *Election for past years.* In the case of brick and tile clay, fire clay, or shale used by the mineowner or operator in the manufacture of building or paving brick, drainage and roofing tile, sewer pipe, flower pots, and kindred products (without regard to the applicable rate of percentage depletion), if an election is made under subsection (c), for the purpose of applying section 613(c) of the Internal Revenue Code of 1954 (and corresponding provision of the Internal Revenue Code of 1939) for each of the taxable years with respect to which the election is effective:

(1) Gross income from the property shall be 50 per centum of the amount for which the manufactured products are sold during the taxable year except that with respect to such manufactured products, gross income from the property shall not exceed an amount equal to $12.50 multiplied by the number of short tons used in the manufactured products sold during the taxable year, and

(2) For purposes of computing the 50 per centum limitation under section 613(a) of the Internal Revenue Code of 1954 (or the corresponding provision of the Internal Revenue Code of 1939), the taxable income from the property (computed without allowance for depletion) shall be 50 per centum of the taxable income from the manufactured products sold during the taxable year (computed without allowance for depletion).

(b) *Years to which applicable.* An election made under subsection (c) to have the provisions of this section apply shall be effective for all taxable years beginning before January 1, 1961, in respect of which:

(1) The assessment of a deficiency,

(2) The refund or credit of an overpayment, or

(3) The commencement of a suit for recovery of a refund under section 7405 of the Internal Revenue Code of 1954, is not prevented on the date of the enactment of this Act by the operation of any law or rule of law. Such election shall also be effective for any taxable year beginning before January 1, 1961, in respect of which an assessment of a deficiency has been made but not collected on or before the date of the enactment of this Act.

(c) *Time and manner of election.* An election to have the provisions of this section apply shall be made by the taxpayer on or before the sixtieth day after the date of publication in the FEDERAL REGISTER of final regulations issued under authority of subsection (f), and shall be made in such form and manner as the Secretary of the Treasury or his delegate shall prescribe by regulations. Such election, if made, may not be revoked.

(d) *Statutes of limitation.* Notwithstanding any other law, the period within which an assessment of a deficiency attributable to the election under subsection (c) may be made with respect to any taxable year for which such election is effective, and the period within which a claim for refund or credit of an overpayment attributable to the election under such subsection may be made with respect to any such taxable year, shall not expire prior to one year after the last day for making an election under subsection (c). An election by a taxpayer under subsection (c) shall be considered as a consent to the application of the provisions of this subsection.

(e) *Terms; applicability of other laws.* Except where otherwise distinctly expressed or manifestly intended, terms used in this section shall have the same meaning as when used in the Internal Revenue Code of 1954 (or corresponding provisions of the Internal Revenue Code of 1939) and all provisions of law shall apply with respect to this section as if this section were a part of such Code (or corresponding provisions of the Internal Revenue Code of 1939).

(f) *Regulations.* The Secretary of the Treasury or his delegate shall prescribe such regulations as may be necessary to carry out the provisions of this section.

(75 Stat. 674; 26 U.S.C. 613 note)

[T.D. 6575, 26 FR 9632, Oct. 12, 1961]

§ 1.9004–1 Election relating to the determination of gross income from the property for taxable years beginning prior to 1961 in the case of certain clays and shale.

(a) *In general.* The Act of September 26, 1961 (Pub. L. 87–312, 75 Stat. 674), provides that certain taxpayers may elect to apply the provisions thereof to all taxable years beginning before January 1, 1961, with respect to which the election is effective. The Act prescribes special rules for the application of section 613 (a) and (c) of the Internal Revenue Code of 1954 (and corresponding provisions of the Internal Revenue Code of 1939) in the case of shale and certain clays used by the mine owner or operator in the manufacture of certain clay and shale products.

(b) *Election.* The election to apply the provisions of the Act may be made only by a mine owner or operator with respect to brick and tile clay, fire clay, or shale which he mined and used in the manufacture of building or paving brick, drainage and roofing tile, sewer pipe, flower pots, and kindred products. The election must be made in accordance with § 1.9004–4 on or before December 11, 1961, and the election shall become irrevocable on December 11, 1961.

(c) *Years to which the election is applicable.* If the election described in paragraph (b) of this section is made by the taxpayer, the provisions of the Act shall be effective for all taxable years beginning before January 1, 1961, in respect of which the:

(1) Assessment of a deficiency,

(2) Refund or credit of an overpayment, or

(3) Commencement of a suit for recovery of a refund under section 7405 of the Internal Revenue Code of 1954,

is not prevented on September 26, 1961, by the operation of any law or rule of law. The election is also effective for any taxable year beginning before January 1, 1961, in respect of which an assessment of a deficiency has been made but not collected on or before September 26, 1961.

(75 Stat. 674; 26 U.S.C. 613 note)

[T.D. 6575, 26 FR 9632, Oct. 12, 1961]

§ 1.9004–2 Effect of election.

(a) *In general.* If a taxpayer makes the election described in paragraph (b) of § 1.9004–1, he shall be deemed to have consented to the application of the Act with respect to all the clay and shale described in that paragraph for all taxable years for which the election is effective whether or not the taxpayer is litigating the issue for any of such years. Thus, in applying section 613 of the Internal Revenue Code of 1954 (and

corresponding provisions of the Internal Revenue Code of 1939) to those years:

(1) The ''gross income from the property'' for purposes of section 613(c) of the Internal Revenue Code of 1954 (and corresponding provisions of the Internal Revenue Code of 1939) shall be 50 percent of the amount for which the mineowner or operator sold, during the taxable year, the building or paving brick, drainage and roofing tile, sewer pipe, flower pots, and kindred products manufactured from the clay and shale described in paragraph (b) of § 1.9004–1, but shall not exceed an amount equal to $12.50 multiplied by the number of short tons of all such clay or shale mined and used by the mineowner or operator in the manufacture of the products sold during the taxable year; and

(2) The ''taxable income from the property'' (computed without allowance for depletion) for purposes of section 613(a) of the Internal Revenue Code of 1954 (and corresponding provisions of the Internal Revenue Code of 1939) shall be 50 percent of the taxable income from the manufactured products sold during the taxable year (computed without allowance for depletion).

(b) *Effect on depletion rates and other items.* The election shall have no effect on the applicable rate of percentage depletion for the taxable years to which the election is effective. In applying the election to the years affected there shall be taken into account the effect that any adjustments resulting from the election shall have on other items affected thereby, such as charitable contributions, foreign tax credit, net operating loss, and the effect that adjustments to any such items shall have on other taxable years. The provisions of the Act are applicable with respect to taxable years subject to the Internal Revenue Code of 1939 for purposes of applying sections 450 and 453 of that Code.

(75 Stat. 674; 26 U.S.C. 613 note)

[T.D. 6575, 26 FR 9632, Oct. 12, 1961]

§ 1.9004–3 Statutes of limitation.

The period within which the assessment of any deficiency or the credit or refund of any overpayment attributable to the election may be made shall not expire sooner than one year after December 11, 1961. Thus, if assessment of a deficiency or credit or refund of an overpayment, whichever is applicable, is not prevented on September 26, 1961, the time for making assessment or credit or refund shall not expire for at least one year after December 11, 1961, notwithstanding any other provision of law to the contrary. Even though assessment of a deficiency is prevented on September 26, 1961, if commencement of a suit for recovery of a refund under section 7405 of the Internal Revenue Code of 1954 may be made on such date, then any deficiency resulting from the election may be assessed at any time within 1 year after December 11, 1961. If a taxpayer makes the election, he shall be deemed to have consented to the application of the provisions of the Act extending the time for assessing a deficiency attributable to the election. The Act does not shorten the periods of limitation otherwise applicable. An agreement may be entered into under section 6501(c)(4) of the Internal Revenue Code of 1954 and corresponding provisions of prior law to extend the period for assessment.

(75 Stat. 674; 26 U.S.C. 613 note)

[T.D. 6575, 26 FR 9632, Oct. 12, 1961]

§ 1.9004–4 Manner of exercising election.

(a) *By whom election is to be made.* Generally, the taxpayer whose tax liability is affected by the election shall make the election. In the case of a partnership, or a corporation electing under the provisions of subchapter S, chapter 1 of the Internal Revenue Code of 1954, the election shall be exercised by the partnership or such corporation, as the case may be.

(b) *Time and manner of making election.* The election shall be made on or before December 11, 1961, by filing a statement with the district director with whom the taxpayer's income tax return for the taxable year in which the election is made is required to be filed. The statement shall include the following:

(1) A clear indication that an election is being made under the Act, and

(2) The taxable years to which the election applies.

Amended income tax returns reflecting any increase or decrease in tax attributable to the election shall be filed for the taxable years to which the election applies. In the case of partnerships and electing small business corporations under subchapter S, chapter 1 of the Internal Revenue Code of 1954, amended returns shall be filed by the partnership or electing small business corporation, as well as by the partners or shareholders, as the case may be. Any amended return shall be filed with the office of the district director with whom the taxpayer files his income tax return for the taxable year in which the election is made and, if practicable, on the same date the statement of election is filed, but amended returns shall be filed in no event later than March 31, 1962, unless an extension of time is granted under section 6081 of the Internal Revenue Code of 1954. Whenever the amended returns do not accompany the statement of election, a copy of the statement shall be submitted with the amended returns. The amended returns shall be accompanied by payment of the additional tax (together with interest thereon) resulting from the election.

(75 Stat. 674, 26 U.S.C. 613 note)

[T.D. 6575, 26 FR 9633, Oct. 12, 1961]

§ 1.9004–5 Terms; applicability of other laws.

All other terms which are not otherwise specifically defined shall have the same meaning as when used in the Internal Revenue Code of 1954 (or the corresponding provisions of prior law) except where otherwise distinctly expressed or manifestly intended to the contrary. Further, all provisions of law contained in the Code (or the corresponding provisions of prior law) shall apply to the extent that they can apply. Thus, all the provisions of subtitle F of the Code (and the corresponding provisions of prior law) shall apply to the extent they can apply, including the provisions of law relating to assessment, collection, credit or refund, and limitations. For purposes of this section and §§ 1.9004–1 to 1.9004–4, inclusive, the term ''Act'' means the Act of September 26, 1961 (Pub. L. 87–312, 75 Stat. 674).

(75 Stat. 674, 26 U.S.C. 613 note)

[T.D. 6575, 26 FR 9633, Oct. 12, 1961]

QUARTZITE AND CLAY USED IN PRODUCTION OF REFRACTORY PRODUCTS; ELECTION FOR PRIOR TAXABLE YEARS

§ 1.9005 Statutory provisions; section 2 of the Act of September 26, 1961 (Pub. L. 87–321, 75 Stat. 683).

SEC. 2. *Election for quartzite and clay used in the production of refractory products*—(a) *Election for past years.* If an election is made under subsection (c), in the case of quartzite and clay used by the mine owner or operator in the production of refractory products, for the purpose of applying section 613(c) of the Internal Revenue Code of 1954 (and corresponding provisions of the Internal Revenue Code of 1939) for each of the taxable years with respect to which the election is effective:

(1) The term ''ordinary treatment processes'' shall include crushing, grinding, and separating the mineral from waste, but shall not include any subsequent process; and

(2) The gross income from mining for each short ton of such quartzite or clay used in the production of all refractory products sold during the taxable year shall be equal to 87½ percent of the lesser of:

(A) The average lowest published or advertised price, or

(B) The average lowest actual selling price, at which, during the taxable year, the mine owner or operator offered to sell, or sold, such quartzite or clay (in the form and condition of such products after the application of only the processes described in paragraph (1) and before transportation from the plant in which such processes were applied). For purposes of this paragraph, exceptional, unusual, or nominal sales or selling prices shall be disregraded. If the mine owner or operator makes no sales of, or makes only exceptional, unusual, or nominal sales of, such quartzite or clay after application of only the processes described in paragraph (1), then in lieu of the price provided for in subparagraph (A) or (B) there shall be used the average lowest recognized selling price for the taxable year for such quartzite or clay in the marketing area of the mine owner or operator published in a trade journal or other industry publication.

(b) *Years to which applicable.* An election made under subsection (c) to have the provisions of this section apply shall be effective on and after January 1, 1951, for all taxable years beginning before January 1, 1961, in respect of which:

(1) The assessment of a deficiency,

(2) The refund or credit of an overpayment, or

(3) The commencement of a suit for recovery of a refund under section 7405 of the Internal Revenue Code of 1954,

is not prevented on the date of the enactment of this Act by the operation of any law or rule of law. Such election shall also be effective on and after January 1, 1951, for any taxable year beginning before January 1, 1961, in respect of which an assessment of a deficiency has been made but not collected on or before the date of the enactment of this Act.

(c) *Time and manner of election.* An election to have the provisions of this section apply shall be made by the taxpayer on or before the 60th day after the date of publication in the Federal Register of final regulations issued under authority of subsection (f), and shall be made in such form and manner as the Secretary of the Treasury or his delegate shall prescribe by regulations. Such election, if made, may not be revoked.

(d) *Statutes of limitations.* Notwithstanding any other law, the period within which an assessment of a deficiency attributable to the election under subsection (c) may be made with respect to any taxable year for which such election is effective, and the period within which a claim for refund or credit of an overpayment attributable to the election under such subsection may be made with respect to any such taxable year, shall not expire prior to one year after the last day for making an election under subsection (c). An election by a taxpayer under subsection (c) shall be considered as a consent to the application of the provisions of this subsection.

(e) *Terms; applicability of other laws.* Except where otherwise distinctly expressed or manifestly intended, terms used in this section shall have the same meaning as when used in the Internal Revenue Code of 1954 (or corresponding provisions of the Internal Revenue Code of 1939) and all provisions of law shall apply with respect to this section as if this section were a part of such Code (or corresponding provisions of the Internal Revenue Code of 1939).

(f) *Regulations.* The Secretary of the Treasury or his delegate shall prescribe such regulations as may be necessary to carry out the provisions of this section.

(Sec. 2(f), 75 Stat. 683; 26 U.S.C. 613 note)

[T.D. 6583, 26 FR 12077, Dec. 16, 1961]

§ 1.9005–1 Election relating to the determination of gross income from the property for taxable years beginning prior to 1961 in the case of clay and quartzite used in making refractory products.

(a) *In general.* Section 2 of the Act of September 26, 1961 (Pub. L. 87–321, 75 Stat. 683), provides that certain taxpayers may elect to apply the provisions of such section to all taxable years beginning before January 1, 1961, with respect to which the election is effective. Section 2 of the Act prescribes special rules for the application of section 613(c) of the Internal Revenue Code of 1954 (and corresponding provisions of the Internal Revenue Code of 1939) in the case of quartzite and clay used by the mine owner or operator in the production of refractory products.

(b) *Election.* The election to apply the provisions of section 2 of the Act may be made only in the case of quartzite and clay used in the production of products generally recognized as refractory products by the refractories industry. Examples of such products are clay firebrick, silica brick, and refractory bonding mortars. The election may be made only by a taxpayer who both mined the clay or quartzite and used it in the production of refractory products. The election must be made in accordance with § 1.9005–4 on or before February 14, 1962, and the election shall become irrevocable on that date.

(c) *Years to which the election is applicable.* If the election described in paragraph (b) of this section is made by the taxpayer, the provisions of section 2 of the Act shall be effective on and after January 1, 1951, for all taxable years beginning before January 1, 1961, in respect of which the:

(1) Assessment of a deficiency,

(2) Refund or credit of an overpayment, or

(3) Commencement of a suit for recovery of a refund under section 7405 of the Internal Revenue Code of 1954,

was not prevented on September 26, 1961, by the operation of any law or rule of law. The election is also effective on and after January 1, 1951, for

any taxable year beginning before January 1, 1961, in respect of which an assessment of a deficiency has been made but not collected on or before September 26, 1961.

(Sec. 2(f), 76 Stat. 683, 26 U.S.C. 613 note)

[T.D. 6583, 26 FR 12078, Dec. 16, 1961]

§ 1.9005–2 Effect of election.

(a) *In general*. If a taxpayer makes the election described in paragraph (b) of § 1.9005–1, he shall be deemed to have consented to the application of section 2 of the Act with respect to all the clay and quartzite described in that paragraph for all taxable years for which the election is effective whether or not the taxpayer is litigating the issue for any of such years. Thus, in applying section 613(c) of the Internal Revenue Code of 1954 (and corresponding provisions of the Internal Revenue Code of 1939) to those years:

(1) The term ''ordinary treatment processes'' shall include crushing, grinding, and separating the mineral from waste, but shall not include any subsequent process; and

(2) The gross income from mining for each short ton of quartzite or clay mined by the taxpayer and used by him in the production of all refractory products sold during the taxable year shall be equal to 87½ percent of the lesser of:

(i) The average lowest published or advertised price, or

(ii) The average lowest actual selling price at which the mine owner or operator offered to sell or sold any such quartzite or clay during the taxable year.

(b) *Rules for applying paragraph (a) of this section*. (1) The price described in paragraph (a)(2) of this section and any price described in this paragraph shall be determined with reference to quartzite or clay in the form and condition of such products after the application of only the processes described in paragraph (a)(1) of this section and before transportation from the plant in which such processes were applied.

(2) If quartzite and clay were mined and used by the taxpayer in the production of refractory products, a separate price shall be used with respect to each mineral.

(3) There shall be used for each mineral the lowest price at which it was sold or offered for sale by the taxpayer during the taxable year. Thus, only one price shall be used with respect to each mineral regardless of variations in type or grade.

(4) For purposes of this paragraph, exceptional, unusual, or nominal sales of quartzite or clay shall be disregarded. Thus, for example, if the taxpayer made an accommodation sale during the taxable year at other than the regular price, such sale is to be disregarded.

(5) If the taxpayer made no sales during the taxable year of quartzite or clay in the form and condition described in subparagraph (1) of this paragraph, or if his sales were exceptional, unusual, or nominal, there shall be used the lowest recognized selling price for the taxpayer's marketing area for quartzite or clay (of the same grade and type as that used by him) which was published for the taxable year in a trade journal or other industry publication.

(6) If subparagraph (5) of this paragraph does not apply for the reason that there is no recognized selling price published in a trade journal or other industry publication for the taxpayer's marketing area, there shall be used the lowest price at which quartzite or clay comparable to that used by the taxpayer was sold or offered for sale during the taxable year in that area by other producers similarly circumstanced as the taxpayer or, if appropriate, the lowest price paid by the taxpayer for purchased quartzite or clay.

(7) If the lowest selling price otherwise applicable under the preceding provisions of this paragraph fluctuated during the taxable year, the two or more lowest selling prices shall be averaged according to the number of days during the taxable year that each such price was in effect.

(c) The provisions of paragraphs (a) and (b) of this section may be illustrated by the following examples:

Example (1) —(i) *Facts*. Taxpayer A, a calendar year taxpayer, mined quartzite and clay and used them in the production of recognized refractory products. During the taxable year, the lowest price for which A sold

clay after the application of crushing and grinding was $13.75 per short ton. He also sold some ground clay of a different type at $20.00 per short ton. A sold quartzite after the application of crushing and grinding for various prices, depending upon type, ranging from $14.00 per short ton to $20.00 per short ton. During the taxable year, the prices for the various types of ground clay and quartzite did not change. None of the sales by A of ground clay or quartzite were exceptional, unusual, or nominal.

(ii) *Determination of gross income from mining.* If A makes the election described in paragraph (b) of §1.9005–1, the gross income from mining per short ton of clay mined by A and used in the production of refractory products sold during the taxable year is $12.03 (87½ percent of $13.75), and the gross income from mining per short ton of quartzite mined by A and used in the production of refractory products sold during the taxable year is $12.25 (87½ percent of $14.00). To determine his gross income from mining, A must compute the sum of:

(a) $12.03 multiplied by the number of short tons of clay which were mined by A (whether or not during the taxable year) and which were used by A in the production of refractory products (refractory bonding mortar, fire brick, etc.) sold during the taxable year; plus

(b) $12.25 multiplied by the number of short tons of quartzite which were mined by A (whether or not during the taxable year) and which were used by A in the production of refractory products sold during the taxable year.

Example (2). Assume the same facts as in example (1) except that on October 1 of the taxable year A's lowest price for clay after the application of crushing and grinding increased to $14.40 per short ton. In this case, the average lowest price for which A sold ground clay during the taxable year must be determined by taking into account the price adjustment of October 1. Under these circumstances, the average lowest price for the ground clay would be $13.91, that is $13.75×273/365 plus $14.40×92/365.

(d) *Effect on depletion rates and other items.* The election shall have no effect on the applicable rate of percentage depletion for the taxable years for which the election is effective. In applying the election to the years affected there shall be taken into account the effect that any adjustments resulting from the election shall have on other items affected thereby, such as charitable contributions, foreign tax credit, net operating loss, and the effect that adjustments to any such items shall have on other taxable years. The provisions of section 2 of the Act are applicable with respect to taxable years subject to the Internal Revenue Code of 1939 for purposes of applying sections 450 and 453 of that Code. The election shall have no effect on the determination of the treatment processes which are to be considered as mining or on the determination of gross income from mining for any taxable year beginning after December 31, 1960.

(Sec. 2(f), 75 Stat. 683; 26 U.S.C. 613 note)

[T.D. 6583, 26 FR 12078, Dec. 16, 1961]

§ 1.9005–3 Statutes of limitation.

Notwithstanding any provision of law to the contrary, the period within which the assessment of any deficiency attributable to the election may be made, or within which the credit or refund of any overpayment attributable to the election may be made, shall not expire sooner than one year after the last day for making the election. Thus, if assessment of a deficiency or credit or refund of an overpayment, whichever is applicable, was not prevented on September 26, 1961, the time for making assessment or credit or refund shall not expire for at least one year after the last day for making the election. Even though assessment of a deficiency was prevented on September 26, 1961, if commencement of a suit for recovery of a refund under section 7405 of the Internal Revenue Code of 1954 may have been made on such date, then any deficiency resulting from the election may be assessed at any time within one year after the last day for making the election. If a taxpayer makes the election, he shall be deemed to have consented to the application of the provisions of section 2 of the Act extending the time for assessing a deficiency attributable to the election. Section 2 of the Act does not shorten the period of limitations otherwise applicable. An agreement may be entered into under section 6501(c)(4) of the Internal Revenue Code of 1954 and corresponding provisions of prior law to extend the period for assessment.

(Sec. 2(f), 75 Stat. 683; 26 U.S.C. 613 note)

[T.D. 6583, 26 FR 12079, Dec. 16, 1961]

§ 1.9005–4 Manner of exercising election.

(a) *By whom election is to be made.* Generally, the taxpayer whose tax liability is affected by the election shall make the election. In the case of a partnership, or a corporation electing under the provisions of subchapter S, chapter 1 of the Internal Revenue Code of 1954, the election shall be exercised by the partnership or such corporation, as the case may be.

(b) *Time and manner of making election.* The election shall be made on or before February 14, 1962, by filing a statement with the district director with whom the taxpayer's income tax return for the taxable year in which the election is made is required to be filed. The statement shall include the following:

(1) A clear indication that an election is being made under section 2 of the Act, and

(2) The taxable years to which the election applies.

Amended income tax returns reflecting any increase or decrease in tax attributable to the election shall be filed for the taxable years to which the election applies. In the case of partnerships and electing small business corporations under subchapter S, chapter 1 of the Internal Revenue Code of 1954, amended returns shall be filed by the partnership or electing small business corporation, as well as by the partners or shareholders, as the case may be. Any amended return shall be filed with the office of the district director with whom the taxpayer files his income tax return for the taxable year in which the election is made, and, if practicable, on the same date the statement of election is filed, but amended returns shall be filed in no event later than May 31, 1962, unless an extension of time is granted under section 6081 of the Internal Revenue Code of 1954. Whenever the amended returns do not accompany the statement of election, a copy of the statement shall be submitted with the amended returns. The amended returns shall be accompanied by payment of the additional tax (together with interest thereon) resulting from the election.

(Sec. 2(f), 75 Stat. 683; 26 U.S.C. 613 note)

[T.D. 6583, 26 FR 12079, Dec. 16, 1961]

§ 1.9005–5 Terms; applicability of other laws.

All other terms which are not otherwise specifically defined shall have the same meaning as when used in the Internal Revenue Code of 1954 (or the corresponding provisions of prior law) except where otherwise distinctly expressed or manifestly intended to the contrary. Further, all provisions of law contained in the Code (or the corresponding provisions of prior law) shall apply to the extent that they can apply. Thus, all the provisions of subtitle F of the Code (and the corresponding provisions of prior law) shall apply to the extent they can apply, including the provisions of law relating to assessment, collection, credit or refund, and limitations. For purposes of this section and §§ 1.9005–1 to 1.9005–4, inclusive, the term ''Act'' means the Act of September 26, 1961 (Pub. L. 87–321, 75 Stat. 683).

(Sec. 2(f), 75 Stat. 683; 26 U.S.C. 613 note)

[T.D. 6583, 26 FR 12079, Dec. 16, 1961

TAX REFORM ACT OF 1969

§ 1.9006 Statutory provisions; Tax Reform Act of 1969.

Section 946 of the Tax Reform Act of 1969 (83 Stat. 729) provides as follows:

SEC. 946. *Interest and penalties in case of certain taxable years*—(a) *Interest on underpayment.* Notwithstanding section 6601 of the Internal Revenue Code of 1954, in the case of any taxable year ending before the date of the enactment of this Act, no interest on any underpayment of tax, to the extent such underpayment is attributable to the amendments made by this Act, shall be assessed or collected for any period before the 90th day after such date.

(b) *Declarations of estimated tax.* In the case of a taxable year beginning before the date of the enactment of this Act, if any taxpayer is required to make a declaration or amended declaration of estimated tax, or to pay any amount or additional amount of estimated tax, by reason of the amendments made by this Act, such amount or additional amount shall be paid ratably on or before each of the remaining installment dates for the taxable

year beginning with the first installment date on or after the 30th day after such date of enactment. With respect to any declaration or payment of estimated tax before such first installment date, sections 6015, 6154, 6654, and 6655 of the Internal Revenue Code of 1954 shall be applied without regard to the amendments made by this Act. For purposes of this subsection, the term ''installment date'' means any date on which, under section 6153 or 6154 of such Code (whichever is applicable), an installment payment of estimated tax is required to be made by the taxpayer.

[T.D. 7088, 36 FR 3052, Feb. 17, 1971]

§ 1.9006–1 Interest and penalties in case of certain taxable years.

(a) *Interest on underpayment.* The Internal Revenue Code of 1954 was amended in many important respects by the Tax Reform Act of 1969. Certain of these amendments affect taxable years ending prior to December 30, 1969 (the date of enactment of the Act) and thereby may cause underpayments of tax by a number of taxpayers for those years. Under section 6601(a) of the Code, interest at the rate of 6 percent per annum is imposed upon the amount of any such underpayment. The effect of section 946(a) of the Act is to prevent the assessment or collection of interest on an underpayment of tax for any taxable year ending before December 30, 1969, if such underpayment is attributable to any amendment made by such Act, for the period from the due date for payment until March 30, 1970. Thus, the taxpayer is afforded an interest-free period of 90 days from the date of enactment of such Act within which to account for the changes in the law affecting him and to remit the amount of such underpayment. If, on or after March 30, 1970, the amount of any underpayment (or portion thereof) attributable to an amendment made by the Act remains unpaid, then, as of such date, such underpayment (or portion thereof) shall be subject to interest as provided by section 6601 of the Code, to be computed from such date. However, if a corporation or farmers' cooperative elects to pay its final tax in two installments under section 6152 of the Code and if the second installment is due after March 30, 1970, then, in order to escape the imposition of interest under section 6601, such corporation or cooperative need pay only one-half of the additional tax arising from an amendment made by the Act before March 30, 1970, with the remaining one-half payable as part of the second installment on the regular due date for that installment. In the case of an underpayment of tax which is only partly attributable to an amendment made by the Act, section 946(a) of such Act shall apply only to the extent that such underpayment is so attributable.

(b) *Declarations and payments of estimated tax.* (1) In the case of a taxable year beginning before December 30, 1969, section 946(b) of the Tax Reform Act of 1969 provides transitional rules with respect to the payment of estimated tax and, in the case of an individual, the filing of a declaration of estimated tax. Under such section 946(b) in the case of such a year, if any taxpayer is required to make a declaration or amended declaration of estimated tax, or to pay any amount or additional amount of estimated tax, by reason of the amendments made by the Act, such amount or additional amount shall be paid ratably on or before each of the remaining installment dates for the taxable year beginning with the first installment date on or after February 15, 1970. For purposes of section 946(b) of such Act and this section, the term ''installment date'' means any date on which, under section 6153 or 6154 of the Code (whichever is applicable), an installment payment of estimated tax is required to be made by the taxpayer.

(2) With respect to any declaration or payment of estimated tax before February 15, 1970, sections 6015, 6153, 6154, 6654, and 6655 of the Code shall be applied without regard to the amendments made by such Act. Therefore, any underpayment which occurs solely by reason of the amendments made by such Act shall not be treated as an underpayment in the case of installment dates before February 15, 1970. Similarly, in the case of a taxpayer all of whose installment dates occur prior to February 15, 1970, no payment of estimated tax need be made to reflect the amendments made by such Act.

(3) The following example illustrates the application of the provisions of

subparagraphs (1) and (2) of this paragraph:

Example. A, a fiscal year taxpayer with a taxable year from July 1, 1969, through June 30, 1970, had, without regard to the enactment of the Tax Reform Act of 1969, a total tax liability, which would have been shown on his return, of $500. A is not a farmer or fisherman described in section 6037(b). A's tax liability is increased by $20 to $520, attributable to an amendment made by such Act. A makes an installment payment of estimated tax of $90 on each of the following four installment dates: October 15, 1969; December 15, 1969; March 15, 1970; and July 15, 1970. Assume that A is unaffected by the exceptions provided in section 6654(d). Therefore, A is underpaid by $10 on both October 15 and December 15, and by $18 on both March 15 and July 15. Such underpayments are computed as follows:

(a) October 15 and December 15 installment dates:	
(1) Tax without regard to Tax Reform Act of 1969	$500
(2) 80% of item (1)	400
(3) Minimum payment to avoid underpayment, determined without regard to Act:	
October 15, 1969 (25% of item (2))	100
December 15, 1969 (25% of item (2))	100
(4) Actual payment:	
October 15, 1969	90
December 15, 1969	90
(5) Amount of underpayment:	
October 15, 1969 ($100 – $90)	10
December 15, 1969 ($100 – $90)	10
(b) March 15 and July 15 installment dates:	
(1) Tax with regard to Act	520
(2) 80% of item (1)	416
(3) Less total of minimum payments to avoid underpayment, determined without regard to Act for October 15, 1969 and December 15, 1969 ($100+$100)	200
(4) Difference of items (2) and (3)	216
(5) Minimum payment to avoid underpayment, determined with regard to Act:	
March 15 (50% of $216)	108
July 15 (50% of $216)	108
(6) Actual payment:	
March 15	90
July 15	90
(7) Amount of underpayment:	
March 15 ($108 – $90)	18
July 15 ($108 – $90)	18

(c) *Cross references*. (1) Taxpayers affected by the following sections, among others, of the Tax Reform Act of 1969 may be subject to the provisions of section 946 (a) or (b) (whichever is applicable) of such Act:

(i) Act section 201(a), which adds section 170(f)(2) to the Code and which applies to gifts made after July 31, 1969.

(ii) Act section 201(c), which repeals section 673(b) of the Code and which applies to transfers in trust made after April 22, 1969.

(iii) Act section 212(c), which amends section 1031 of the Code and which applies to taxable years to which the 1954 Code applies.

(iv) Act section 332, which amends section 677 of the Code and which applies to property transferred in trust after October 9, 1969.

(v) Act section 411(a), which adds section 279 to the Code and which applies to interest paid or incurred on an indebtedness incurred after October 9, 1969.

(vi) Act sections 412 (a) and (b), which adds section 453(b)(3) to the Code and which apply to sales or other dispositions occurring after May 27, 1969, which are not made pursuant to a contract entered into on or before that date.

(vii) Act section 413, which amends sections 1232(a), 1232(b)(2), and 6049 of the Code and which applies to bonds and other evidences of indebtedness issued after May 27, 1969.

(viii) Act section 414, which adds section 249 to the Code and which applies to convertible bonds or other convertible evidences of indebtedness repurchased after April 22, 1969.

(ix) Act section 421(a), which amends section 305 of the Code and which applies to distributions made after January 10, 1969.

(x) Act sections 516 (a) and (d), which add section 1001(e) to the Code and which apply to sales of life estates made after October 9, 1969.

(xi) Act section 601, which amends section 103 of the Code and which applies to obligations issued after October 9, 1969.

(xii) Act section 703 which amends sections 46(b) and 47(a) of the Code and which applies to section 38 property built or acquired after April 18, 1969.

(xiii) Act section 905, which adds section 311(d) to the Code and which applies to distributions made after November 30, 1969.

(2) In addition to the references in subparagraph (1) of this paragraph, section 946(b) of the Tax Reform Act of 1969 may apply to taxpayers affected by the following sections, among others, of such Act:

(i) Act section 201(a), which adds section 170(e) to the Code and which applies to contributions paid after December 31, 1969.

(ii) Act sections 501 (a) and (b), which amend section 613 of the Code and which apply to taxable years beginning after October 9, 1969.

(iii) Act sections 516 (c) and (d) which add section 1253 to the Code and which apply to transfers after December 31, 1969.

(iv) Act section 701(a), which amends section 51 of the Code and which applies to taxable years ending after December 31, 1969, and beginning before July 1, 1970.

[T.D. 7088, 36 FR 3053, Feb. 17, 1971]

MISCELLANEOUS PROVISIONS

§ 1.9101–1 Permission to submit information required by certain returns and statements on magnetic tape.

In any case where the use of a Form 1087 or 1099 is required by the regulations under this part for the purpose of making a return or reporting information, such requirement may be satisfied by submitting the information required by such form on magnetic tape or by other media, provided that the prior consent of the Commissioner or other authorized officer or employee of the Internal Revenue Service has been obtained. Applications for such consent must be filed in accordance with procedures established by the Internal Revenue Service. In any case where the use of Form W–2 is required for the purpose of making a return or reporting information, such requirement may be satisfied by submitting the information required by such form on magnetic tape or other approved media, provided that the prior consent of the Commissioner of Social Security (or other authorized officer or employee thereof) has been obtained.

[T.D. 6883, 31 FR 6589, May 3, 1966, as amended by T.D. 7580, 43 FR 60159, Dec. 26, 1978]

§ 1.9200–1 Deduction for motor carrier operating authority.

(a) *In general.* Section 266 of the Economic Recovery Tax Act of 1981 (Pub. L. 97–34, 95 Stat. 265) provides that, for purposes of chapter 1 of the Internal Revenue Code of 1954, an ordinary deduction shall be allowed in computing the taxable income of all taxpayers who either held one or more motor carrier operating authorities on July 1, 1980, or later acquired a motor carrier operating authority pursuant to a binding contract in effect on July 1, 1980. The deduction for each motor carrier operating authority is to be allowed ratably over a 60-month period and is equal to the adjusted basis of the motor carrier operating authority on July 1, 1980. Except as provided in this section, no deduction is allowable for any diminution in value of any motor carrier operating authority caused by administrative or legislative actions to decrease restrictions on entry into the interstate motor carrier business.

(b) *Person entitled to claim deduction.* In general, the deduction provided by this section for a particular motor carrier operating authority may be claimed only by the taxpayer which held the authority on July 1, 1980. However, if another person acquired the motor carrier operating authority after July 1, 1980, pursuant to a binding contract in effect on that date, the deduction for such authority may be claimed only by the acquirer and may not be claimed by the taxpayer which held the authority on July 1, 1980. A taxpayer, otherwise entitled to claim a deduction under this section, who sells a motor carrier operating authority after July 1, 1980 may not claim an amortization deduction for such authority for any month which begins after the date of such sale. In addition, acquisition of a motor carrier operating authority after July 1, 1980, if not pursuant to a binding contract in effect on July 1, 1980, will not entitle the acquirer to a deduction under this section, unless the operating authority is acquired pursuant to a transaction to which section 381 applies.

(c) *Allowance of deduction*—(1) *Determination of period for deduction.*—(i) *General rule.* Except as provided in paragraph (c)(1)(ii) of this section, the 60-month period for taking the deduction provided by this section for a particular motor carrier operating authority begins with the month of July 1980, or, if later, the month in which the motor carrier operating authority was acquired pursuant to a binding contract in effect on July 1, 1980.

(ii) *Election*. In lieu of beginning the 60-month period as provided in paragraph (c)(1)(i) of this section, the taxpayer may elect to begin the 60-month period with the first month of the taxpayer's first taxable year beginning after July 1, 1980. This election, if made, shall apply to the deduction for all motor carrier operating authorities either held by the taxpayer on July 1, 1980, or later acquired by the taxpayer by the end of the first month of the first taxable year beginning after July 1, 1980, pursuant to a binding contract in effect on July 1, 1980. Any such election will not apply to the determination of the period for amortizing the bases of authorities acquired by the taxpayer after the end of the first month of the first taxable year beginning after July 1, 1980.

(2) *Amount of monthly deduction*. In the case of each motor carrier operating authority for which the taxpayer is entitled (under paragraph (b) of this section) to claim a deduction, the deduction for each month during the 60-month period relating to the motor carrier operating authority is equal to the adjusted basis (determined under paragraph (e) of this section) of the motor carrier operating authority divided by 60.

(d) *Definition of motor carrier-operating authority*. For purposes of § 1.9200–2 and this section, the term ''motor carrier operating authority'' means a certificate or permit held by a motor common carrier or motor contract carrier of property and issued pursuant to the Revised Interstate Commerce Act, 49 U.S.C. 10921–10933 (Supp. III 1979). The terms ''motor common carrier'' and ''motor contract carrier'' shall be defined as in 49 U.S.C. 10102 (Supp. III 1979) and do not include persons meeting the definition of freight forwarder contained in 49 U.S.C. 10102 (Supp. III 1979).

(e) *Adjusted basis of motor carrier operating authority*—(1) *In general*. Except as provided in paragraph (e)(2) of this section, the adjusted basis of a motor carrier operating authority for which a deduction is allowed under this section is the adjusted basis of the motor carrier operating authority as determined under sections 1012 and 1016 in the hands of the taxpayer who is entitled to claim the deduction under paragraph (b) of this section.

(2) *Special rule in case of certain stock acquisitions*—(i) *Election by holder*. A corporation entitled to claim a deduction under paragraph (b) of this section for a motor carrier operating authority may elect to allocate a portion of the cost basis of a qualified acquiring party in the stock of an acquired corporation, to the basis of the authority. A qualified acquiring party is a corporation (or a noncorporate person or group of noncorporate persons described in paragraph (e)(2)(ii) of this section) that after June 21, 1952, and on or before July 1, 1980 (or after July 1, 1980 under a binding contract in effect on such date) acquired by purchase, within the meaning of section 334(b)(3) and during a period of not more than 12 months, 80 percent or more of the stock (as described in section 334(b)(2)(B)) of a corporation (the acquired corporation) which held the authority directly or indirectly on the date which is the end of the period of 12 months or less within which such 80 percent of the acquired corporation's stock was purchased. The election to allocate basis in an acquired corporation's stock to the basis in an authority may be made only if 80 percent of all classes of the acquired corporation's stock (other than nonvoting stock which is limited and preferred as to dividends) was acquired by purchase (within the meaning of section 334(b)(3)) during a period of not more than 12 months, as described in section 334(b)(2)(B). If the qualified acquiring party is a corporation, the taxpayer holding the authority on July 1, 1980, may elect the basis allocation of this paragraph only if it is a member of the affiliated group (as defined in section 1504(a)) of which the qualified acquiring party is a member. If there is more than one acquisition of stock that might permit an election to allocate basis under this paragraph (e)(2)(i), the taxpayer may elect to allocate to the authority only the basis in the acquired corporation's stock held by the qualified acquiring party which became a qualified acquiring party as a result of the last of such acquisitions.

(ii) *Certain noncorporate persons treated as qualified parties*. For purposes of paragraphs (e)(2) (i) through (vi) of this

section, the term ''qualified acquiring party'' shall include a noncorporate person or group of noncorporate persons which, after June 21, 1952 and on or before July 1, 1980, acquired in one purchase, stock in a corporation (the acquired corporation) which at the time of acquisition held, directly or indirectly, a motor carrier operating authority. In order to be treated as a qualified acquiring party under this paragraph, a noncorporate person or group of noncorporate persons must have held stock constituting control (within the meaning of section 368(c)) of the acquired corporation on July 1, 1980. A group of noncorporate persons consists of two or more noncorporate persons who, acting together on the same date, made the required purchase of stock in the acquired corporation.

(iii) *Portion of stock basis allocable to basis of authority when stock of direct holder of authority is acquired.* If the qualified acquiring party acquired the stock of a corporation directly holding the authority, the portion of the stock basis allocable to the basis of the authority is the amount that would have been properly allocable under section 334(b)(2) if the qualified acquiring party were a corporation that had received the authority in a distribution of all the acquired corporation's assets in a complete liquidation of the acquired corporation immediately after the acquisition of the acquired corporation's stock. If the acquired corporation's stock was acquired on more than one date, the date on which the liquidation is deemed to have occurred shall be the date which is the date of the last acquisition by purchase of stock of the acquired corporation within the 12-month period described in section 334(b)(2)(B).

(iv) *Portion of stock basis allocable to basis of authority when stock of indirect holder of authority is acquired.* If the qualified acquiring party acquired the stock of a corporation indirectly holding the authority (such as by owning all of the stock of a subsidiary that directly holds the authority), a portion of the qualified acquiring party's cost basis in the stock of the acquired corporation may be allocated to the basis in the operating authority. The portion allocable is the amount that would have been properly allocable under section 334(b)(2) if, immediately before the liquidation of the acquired corporation on the date of the last acquisition by purchase of stock of the acquired corporation within the 12-month period described in section 334(b)(2)(B), the authority had been transferred in such a way (such as by liquidating the subsidiary that directly holds the authority) that the qualified acquiring party would have received direct ownership of the authority upon the liquidation of the acquired corporation immediately after the acquisition.

(v) *Other assets to be accounted for.* For purposes of paragraphs (e)(2) (iii) or (iv) of this section, in determining the portion of stock basis properly allocable to the operating authority under section 334(b)(2), the portion of the qualified acquiring party's basis in the acquired corporation's stock that would have been allocable following the liquidation to other assets of the acquired corporation, including intangible assets such as goodwill and going concern value, must be taken into account.

(vi) *Adjustments to basis in acquired corporation's stock and other assets.* If a taxpayer makes the election provided by paragraph (e)(2)(i) of this section, the qualified acquiring party's basis in the stock of the acquired corporation shall be decreased, effective as of July 1, 1980, by the amount determined by the following formula:

$$\frac{\text{Basis in acquired corporation's stock}}{\text{Basis in acquired corporation's stock plus unsecured liabilities of acquired corporation}} \times \text{Amount allocated to basis in authority under section 334(b)(2) minus acquired corporation's basis in authority.}$$

In addition, if the aggregate basis of the assets of the acquired corporation other than the authority as of July 1, 1980 (reduced by the liabilities secured by such assets) exceeds the qualified acquiring party's basis in the stock of the acquired corporation remaining after application of the preceding sentence, then the bases of such assets shall be reduced proportionately so that their aggregate basis as of such date (minus secured liabilities) is equal

to such remaining stock basis. If the acquired corporation held the authority indirectly, appropriate basis reductions shall be made to reflect the transfers deemed to have occurred under paragraph (e)(iv) of this section.

(vii) *Pre-TEFRA law applies.* References made in this section to section 334 of the Code relate to such section as it existed before amendment by the Tax Equity and Fiscal Responsibility Act of 1982.

(f) *Adjustment to basis of motor carrier operating authority.* A taxpayer's basis in a motor carrier operating authority must be reduced by the amount of any amortization deductions allowable to the taxpayer under this section.

(g) *Examples.* The principles of this section may be illustrated by the following examples:

Example (1). (i) Corporation X acquired all the stock of corporation Y for $130,000 in 1970. Y's assets at the time of acquisition consisted of a motor carrier operating authority valued at $180,000 in which it has a basis of $60,000, trucks with a fair market value of $70,000 and an aggregate basis of $30,000, and goodwill valued at $30,000. Y has $50,000 of liabilities secured by the trucks and $100,000 of unsecured liabilities. Both X and Y use a June 30 fiscal year for tax purposes.

(ii) Y is the only taxpayer eligible to claim a deduction under §1.9200–1(b). If X sold its Y stock to Z in October 1980 (other than pursuant to a binding contract in effect on July 1, 1980), Y would continue to be the only taxpayer eligible to claim the deduction. However, if Y sold the operating authority to W in February 1981, neither Y nor W would be eligible to claim the monthly deduction for the remainder of the 60-month period. Also, Y would realize gain or loss on the sale after reducing its basis in the authority by any amortization claimed for the period prior to the sale.

(iii) Y must begin the 60-month period in July 1980 unless it elects under paragraph (c)(1)(ii) of this section to begin the 60-month period with the first month of the first taxable year beginning after July 1, 1980, which in Y's case would be July 1981.

(iv) Y's allowable monthly deduction is equal to its adjusted basis in the operating authority of $60,000, divided by 60, or $1,000. However, Y may elect under §1.9200–1(e)(2) to allocate to its basis in the authority a portion of X's basis in Y stock, since X is a qualified acquiring party under paragraph (e)(2)(i) of this section and Y is a member of an affiliated group of which X is a member. Assuming Y makes the election, Y may allocate to the basis of the authority the amount of X's basis in Y stock that would have been allocable under section 334(b)(2) if X had received the authority in a distribution of all of Y's assets in a complete liquidation of Y immediately after X acquired Y's stock.

Therefore, for purposes of the allocation, X's $130,000 cost basis in Y stock is deemed to be increased by Y's $100,000 of unsecured liabilities to $230,000. Of the $230,000 deemed basis, $180,000 is allocated to the authority, $30,000 to goodwill, and $20,000 to the trucks. Y's allowable monthly amortization deduction would be $180,000 divided by 60, or $3,000. X's $130,000 cost basis in its Y stock must be decreased to $62,174 as provided in paragraph (e)(2)(vi) of this section. Y's $30,000 aggregate basis in its trucks remains unchanged.

Example (2). Assume the same facts as in Example (1), except that Y's aggregate basis in the trucks is $120,000. If Y makes the election under §1.9200–1(e)(2), the same allocation as in Example (1) would occur. However, in addition to the decrease in X's basis in its Y stock to $62,174, the $120,000 aggregate basis in the trucks must be reduced to $112,174 (so that the $112,174 basis minus secured liabilities of $50,000 is equal to X's $62,174 remaining stock basis).

Example (3). Assume the same facts as in Example (1), excet that X pays a negotiated purchase price of $120,000 for the Y stock, in order to take into account an anticipated tax liability of $10,000, relating to potential section 1245 recapture. If Y makes the election under §1.9200–1(e)(2), then for purposes of allocating X's basis in Y stock, X's cost basis is deemed to be increased by Y's $100,000 of unsecured liabilities as well as the $10,000 of potential tax liability resulting from section 1245 recapture, to $230,000. The $10,000 of potential recapture tax is treated as a general liability and the deemed basis is allocated among Y's assets as in Example (1). In order to take into account the potential recapture tax liability, such amount must be based on the same fair market values that are used to determine the amount of the stock basis allocable to the operating authority.

(Sec. 266, Economic Recovery Tax Act of 1981 (Pub. L. 97–34; 95 Stat. 265); sec. 517, Highway Revenue Act of 1982 (Pub. L. 97–424; 96 Stat. 2097); and sec. 7805, Internal Revenue Code of 1954 (68A Stat. 917; 26 U.S.C. 7805)

[T.D. 7947, 49 FR 8247, Mar. 6, 1984; 49 FR 12244, Mar. 29, 1984]

§1.9200–2 Manner of taking deduction.

(a) *In general.* The deduction provided by §1.9200–1 shall be taken by multiplying the amount of the monthly deduction determined under §1.9200–1 (c)(2) for each motor carrier operating authority by the number of months in

the taxable year for which the deduction is allowable, and entering the resulting amount at the appropriate place on the taxpayer's return for each year in which the deduction is properly claimed. Additionally, any taxpayer who has claimed the deduction provided by §1.9200–1 must (unless it has already filed a statement containing the required information) attach a statement to the next income tax return of the taxpayer which has a filing due date on or after June 4, 1984. The statement shall provide, in addition to the taxpayer's name, address, and taxpayer identification number, the following information for each motor carrier operating authority for which a deduction was claimed:

(1) The taxable year of the taxpayer for which the deduction was first claimed;

(2) Whether the taxpayer's deduction was determined using the adjusted basis of the authority under section 1012 or an allocated stock basis under §1.9200–1 (e) (2); and

(3) If an allocation of stock basis has been made under §1.9200–1(e)(2), the calculations made in determining the amount of basis to be allocated to the authority.

(b) *Filing and amendment of returns.* A taxpayer who has filed its return for the taxable year that includes July 1, 1980, claiming the deduction allowed under §1.9200–1, may amend its return for such year in order to elect under §1.9200–1(c)(1)(ii) to begin the 60-month period in the subsequent taxable year. A taxpayer eligible to take the deduction under §1.9200–1 who has filed its returns for both the taxable year that includes July 1, 1980, and the following taxable year without claiming the deduction, may claim the deduction by filing amended returns or claims for refund for the taxable year in which the taxpayer elects to begin the 60-month period, and for subsequent taxable years. If a taxpayer first claims the deduction on an amended return under the preceding sentence, the statement required by paragraph (a) of this section must be attached to such amended return.

(c) *Deduction taken for operating authority other than under §1.9200–1.* If a deduction other than the deduction allowed under §1.9200–1 was taken in any taxable year for the reduction in value of a motor carrier operating authority caused by administrative or legislative actions to decrease restrictions on entry into the interstate motor carrier business, the taxpayer should file an amended return for such taxable year which computes taxable income without regard to such deduction.

(Approved by the Office of Management and Budget under control number 1545–0767)

(Sec. 266, Economic Recovery Tax Act of 1981 (Pub. L. 97–34; 95 Stat. 265); sec. 517, Highway Revenue Act of 1982 (Pub. L. 97–424; 96 Stat. 2097); and sec. 7805, Internal Revenue Code of 1954 (68A Stat. 917; 26 U.S.C. 7805)

[T.D. 7947, 49 FR 8249, Mar. 6, 1984]