AUTHENTICATED
U.S. GOVERNMENT
INFORMATION
GPO

18.0 Tables, Diagrams, Flowcharts, and Validation Data

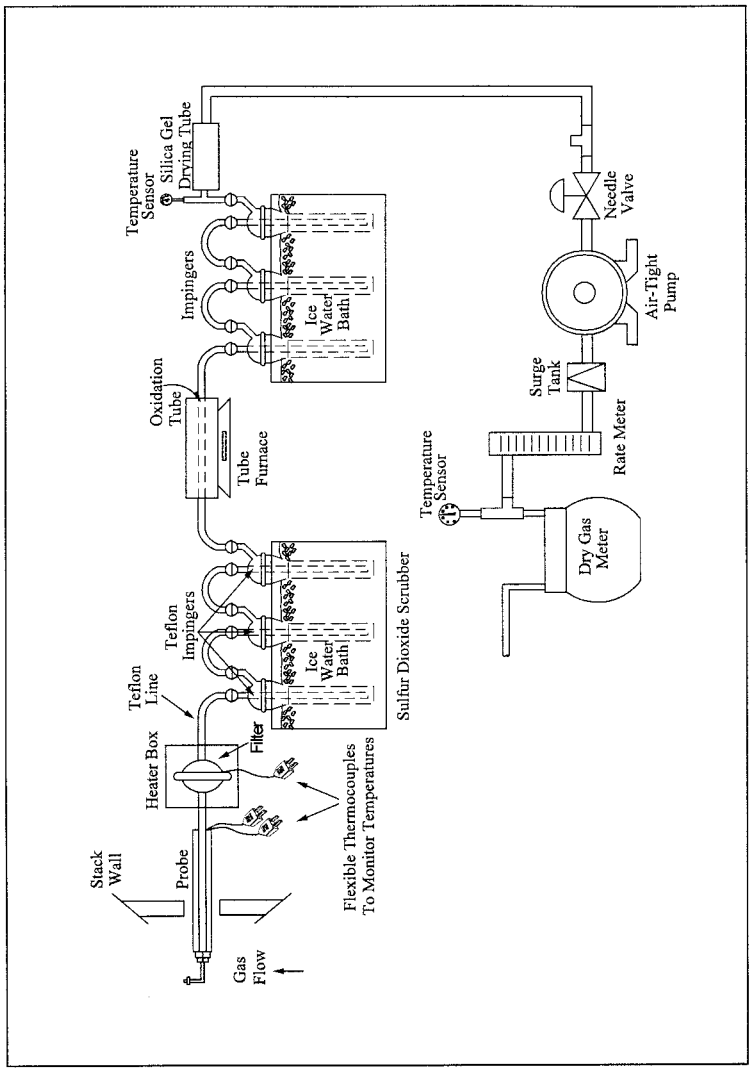

Figure 16A-1. Sampling Train.

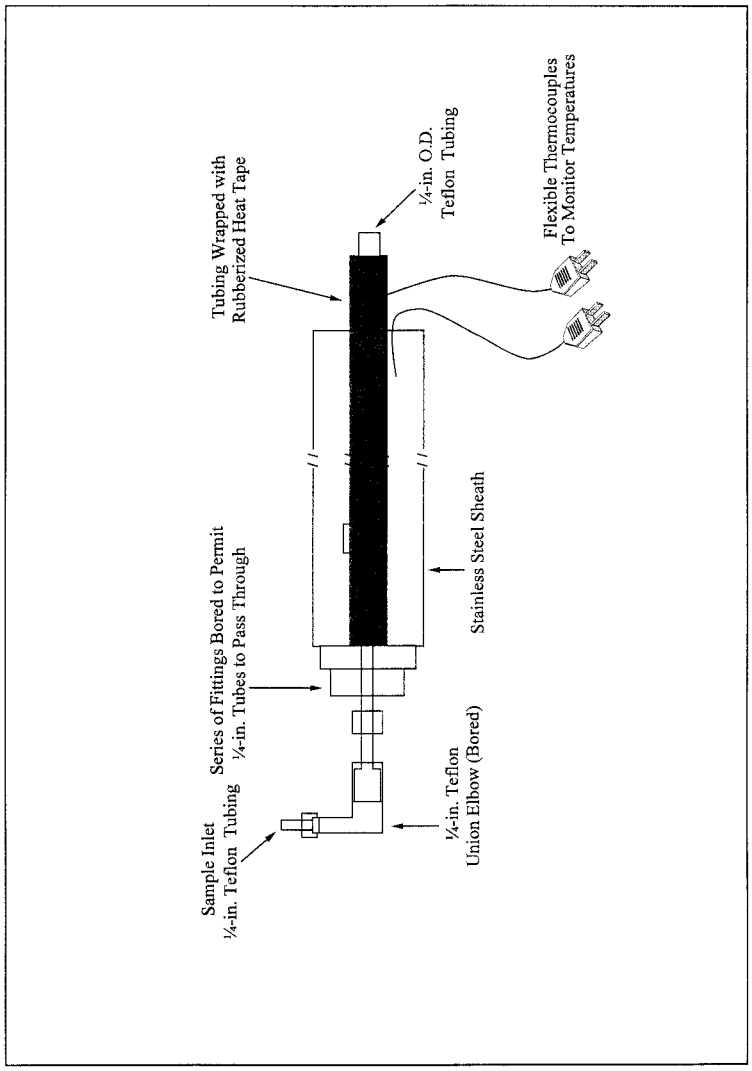

Figure 16A-2. Angled Sampling Probe.