AUTHENTICATED
U.S. GOVERNMENT
INFORMATION
GPO

that this approach will provide more flexibility in determining the appropriate agency for investigation of complaints involving those components of State and local governments not specifically addressed by the listings in paragraph (b). As provided in §§35.170 and 35.171, complaints filed with the Department of Justice will be referred to the appropriate agency.

Several commenters proposed a stronger role for the Department of Justice, especially with respect to the receipt and assignment of complaints, and the overall monitoring of the effectiveness of the enforcement activities of Federal agencies. As discussed above, §§35.170 and 35.171 have been revised to provide for referral of complaints by the Department of Justice to appropriate enforcement agencies. Also, language has been added to §35.190(a) of the final regulation stating that the Assistant Attorney General shall provide policy guidance and interpretations to designated agencies to ensure the consistent and effective implementation of this part.

PART 36—NONDISCRIMINATION ON THE BASIS OF DISABILITY BY PUBLIC ACCOMMODATIONS AND IN COMMERCIAL FACILITIES

Subpart A—General

Sec.
36.101 Purpose.
36.102 Application.
36.103 Relationship to other laws.
36.104 Definitions.
36.105–36.199 [Reserved]

Subpart B—General Requirements

36.201 General.
36.202 Activities.
36.203 Integrated settings.
36.204 Administrative methods.
36.205 Association.
36.206 Retaliation or coercion.
36.207 Places of public accommodations located in private residences.
36.208 Direct threat.
36.209 Illegal use of drugs.
36.210 Smoking.
36.211 Maintenance of accessible features.
36.212 Insurance.
36.213 Relationship of subpart B to subparts C and D of this part.
36.214–36.299 [Reserved]

Subpart C—Specific Requirements

36.301 Eligibility criteria.
36.302 Modifications in policies, practices, or procedures.
36.303 Auxiliary aids and services.
36.304 Removal of barriers.
36.305 Alternatives to barrier removal.
36.306 Personal devices and services.
36.307 Accessible or special goods.
36.308 Seating in assembly areas.
36.309 Examinations and courses.
36.310 Transportation provided by public accommodations.
36.311–36.399 [Reserved]

Subpart D—New Construction and Alterations

36.401 New construction.
36.402 Alterations.
36.403 Alterations: Path of travel.
36.404 Alterations: Elevator exemption.
36.405 Alterations: Historic preservation.
36.406 Standards for new construction and alterations.
36.407 Temporary suspension of certain detectable warning requirements.
36.408–36.499 [Reserved]

Subpart E—Enforcement

36.501 Private suits.
36.502 Investigations and compliance reviews.
36.503 Suit by the Attorney General.
36.504 Relief.
36.505 Attorneys fees.
36.506 Alternative means of dispute resolution.
36.507 Effect of unavailability of technical assistance.
36.508 Effective date.
36.509–36.599 [Reserved]

Subpart F—Certification of State Laws or Local Building Codes

36.601 Definitions.
36.602 General rule.
36.603 Filing a request for certification.
36.604 Preliminary determination.
36.605 Procedure following preliminary determination of equivalency.
36.606 Procedure following preliminary denial of certification.
36.607 Effect of certification.
36.608 Guidance concerning model codes.
APPENDIX A TO PART 36—STANDARDS FOR ACCESSIBLE DESIGN
APPENDIX B TO PART 36—PREAMBLE TO REGULATION ON NONDISCRIMINATION ON THE BASIS OF DISABILITY BY PUBLIC ACCOMMODATIONS AND IN COMMERCIAL FACILITIES (PUBLISHED JULY 26, 1991)

AUTHORITY: 5 U.S.C. 301; 28 U.S.C. 509, 510; 42 U.S.C. 12188(b); Pub. L. 101–410, 104 Stat. 890, as amended by Pub. L. 104–134, 110 Stat. 1321.

SOURCE: Order No. 1513–91, 56 FR 35592, July 26, 1991, unless otherwise noted.

Subpart A—General

§ 36.101 Purpose.

The purpose of this part is to implement title III of the Americans with Disabilities Act of 1990 (42 U.S.C. 12181), which prohibits discrimination on the basis of disability by public accommodations and requires places of public accommodation and commercial facilities to be designed, constructed, and altered in compliance with the accessibility standards established by this part.

§ 36.102 Application.

(a) *General.* This part applies to any—

(1) Public accommodation;

(2) Commercial facility; or

(3) Private entity that offers examinations or courses related to applications, licensing, certification, or credentialing for secondary or postsecondary education, professional, or trade purposes.

(b) *Public accommodations.* (1) The requirements of this part applicable to public accommodations are set forth in subparts B, C, and D of this part.

(2) The requirements of subparts B and C of this part obligate a public accommodation only with respect to the operations of a place of public accommodation.

(3) The requirements of subpart D of this part obligate a public accommodation only with respect to—

(i) A facility used as, or designed or constructed for use as, a place of public accommodation; or

(ii) A facility used as, or designed and constructed for use as, a commercial facility.

(c) *Commercial facilities.* The requirements of this part applicable to commercial facilities are set forth in subpart D of this part.

(d) *Examinations and courses.* The requirements of this part applicable to private entities that offer examinations or courses as specified in paragraph (a) of this section are set forth in § 36.309.

(e) *Exemptions and exclusions.* This part does not apply to any private club (except to the extent that the facilities of the private club are made available to customers or patrons of a place of public accommodation), or to any religious entity or public entity.

§ 36.103 Relationship to other laws.

(a) *Rule of interpretation.* Except as otherwise provided in this part, this part shall not be construed to apply a lesser standard than the standards applied under title V of the Rehabilitation Act of 1973 (29 U.S.C. 791) or the regulations issued by Federal agencies pursuant to that title.

(b) *Section 504.* This part does not affect the obligations of a recipient of Federal financial assistance to comply with the requirements of section 504 of the Rehabilitation Act of 1973 (29 U.S.C. 794) and regulations issued by Federal agencies implementing section 504.

(c) *Other laws.* This part does not invalidate or limit the remedies, rights, and procedures of any other Federal laws, or State or local laws (including State common law) that provide greater or equal protection for the rights of individuals with disabilities or individuals associated with them.

§ 36.104 Definitions.

For purposes of this part, the term—

Act means the Americans with Disabilities Act of 1990 (Pub. L. 101–336, 104 Stat. 327, 42 U.S.C. 12101–12213 and 47 U.S.C. 225 and 611).

Commerce means travel, trade, traffic, commerce, transportation, or communication—

(1) Among the several States;

(2) Between any foreign country or any territory or possession and any State; or

(3) Between points in the same State but through another State or foreign country.

Commercial facilities means facilities—

(1) Whose operations will affect commerce;

(2) That are intended for nonresidential use by a private entity; and

(3) That are not—

(i) Facilities that are covered or expressly exempted from coverage under the Fair Housing Act of 1968, as amended (42 U.S.C. 3601–3631);

(ii) Aircraft; or

(iii) Railroad locomotives, railroad freight cars, railroad cabooses, commuter or intercity passenger rail cars

(including coaches, dining cars, sleeping cars, lounge cars, and food service cars), any other railroad cars described in section 242 of the Act or covered under title II of the Act, or railroad rights-of-way. For purposes of this definition, "rail" and "railroad" have the meaning given the term "railroad" in section 202(e) of the Federal Railroad Safety Act of 1970 (45 U.S.C. 431(e)).

Current illegal use of drugs means illegal use of drugs that occurred recently enough to justify a reasonable belief that a person's drug use is current or that continuing use is a real and ongoing problem.

Disability means, with respect to an individual, a physical or mental impairment that substantially limits one or more of the major life activities of such individual; a record of such an impairment; or being regarded as having such an impairment.

(1) The phrase *physical or mental impairment* means—

(i) Any physiological disorder or condition, cosmetic disfigurement, or anatomical loss affecting one or more of the following body systems: neurological; musculoskeletal; special sense organs; respiratory, including speech organs; cardiovascular; reproductive; digestive; genitourinary; hemic and lymphatic; skin; and endocrine;

(ii) Any mental or psychological disorder such as mental retardation, organic brain syndrome, emotional or mental illness, and specific learning disabilities;

(iii) The phrase physical or mental impairment includes, but is not limited to, such contagious and noncontagious diseases and conditions as orthopedic, visual, speech, and hearing impairments, cerebral palsy, epilepsy, muscular dystrophy, multiple sclerosis, cancer, heart disease, diabetes, mental retardation, emotional illness, specific learning disabilities, HIV disease (whether symptomatic or asymptomatic), tuberculosis, drug addiction, and alcoholism;

(iv) The phrase *physical or mental impairment* does not include homosexuality or bisexuality.

(2) The phrase *major life activities* means functions such as caring for one's self, performing manual tasks, walking, seeing, hearing, speaking, breathing, learning, and working.

(3) The phrase *has a record of such an impairment* means has a history of, or has been misclassified as having, a mental or physical impairment that substantially limits one or more major life activities.

(4) The phrase *is regarded as having an impairment* means—

(i) Has a physical or mental impairment that does not substantially limit major life activities but that is treated by a private entity as constituting such a limitation;

(ii) Has a physical or mental impairment that substantially limits major life activities only as a result of the attitudes of others toward such impairment; or

(iii) Has none of the impairments defined in paragraph (1) of this definition but is treated by a private entity as having such an impairment.

(5) The term *disability* does not include—

(i) Transvestism, transsexualism, pedophilia, exhibitionism, voyeurism, gender identity disorders not resulting from physical impairments, or other sexual behavior disorders;

(ii) Compulsive gambling, kleptomania, or pyromania; or

(iii) Psychoactive substance use disorders resulting from current illegal use of drugs.

Drug means a controlled substance, as defined in schedules I through V of section 202 of the Controlled Substances Act (21 U.S.C. 812).

Facility means all or any portion of buildings, structures, sites, complexes, equipment, rolling stock or other conveyances, roads, walks, passageways, parking lots, or other real or personal property, including the site where the building, property, structure, or equipment is located.

Illegal use of drugs means the use of one or more drugs, the possession or distribution of which is unlawful under the Controlled Substances Act (21 U.S.C. 812). The term "illegal use of drugs" does not include the use of a drug taken under supervision by a licensed health care professional, or other uses authorized by the Controlled Substances Act or other provisions of Federal law.

Individual with a disability means a person who has a disability. The term "individual with a disability" does not include an individual who is currently engaging in the illegal use of drugs, when the private entity acts on the basis of such use.

Place of public accommodation means a facility, operated by a private entity, whose operations affect commerce and fall within at least one of the following categories—

(1) An inn, hotel, motel, or other place of lodging, except for an establishment located within a building that contains not more than five rooms for rent or hire and that is actually occupied by the proprietor of the establishment as the residence of the proprietor;

(2) A restaurant, bar, or other establishment serving food or drink;

(3) A motion picture house, theater, concert hall, stadium, or other place of exhibition or entertainment;

(4) An auditorium, convention center, lecture hall, or other place of public gathering;

(5) A bakery, grocery store, clothing store, hardware store, shopping center, or other sales or rental establishment;

(6) A laundromat, dry-cleaner, bank, barber shop, beauty shop, travel service, shoe repair service, funeral parlor, gas station, office of an accountant or lawyer, pharmacy, insurance office, professional office of a health care provider, hospital, or other service establishment;

(7) A terminal, depot, or other station used for specified public transportation;

(8) A museum, library, gallery, or other place of public display or collection;

(9) A park, zoo, amusement park, or other place of recreation;

(10) A nursery, elementary, secondary, undergraduate, or postgraduate private school, or other place of education;

(11) A day care center, senior citizen center, homeless shelter, food bank, adoption agency, or other social service center establishment; and

(12) A gymnasium, health spa, bowling alley, golf course, or other place of exercise or recreation.

Private club means a private club or establishment exempted from coverage under title II of the Civil Rights Act of 1964 (42 U.S.C. 2000a(e)).

Private entity means a person or entity other than a public entity.

Public accommodation means a private entity that owns, leases (or leases to), or operates a place of public accommodation.

Public entity means—

(1) Any State or local government;

(2) Any department, agency, special purpose district, or other instrumentality of a State or States or local government; and

(3) The National Railroad Passenger Corporation, and any commuter authority (as defined in section 103(8) of the Rail Passenger Service Act). (45 U.S.C. 541)

Qualified interpreter means an interpreter who is able to interpret effectively, accurately and impartially both receptively and expressively, using any necessary specialized vocabulary.

Readily achievable means easily accomplishable and able to be carried out without much difficulty or expense. In determining whether an action is readily achievable factors to be considered include—

(1) The nature and cost of the action needed under this part;

(2) The overall financial resources of the site or sites involved in the action; the number of persons employed at the site; the effect on expenses and resources; legitimate safety requirements that are necessary for safe operation, including crime prevention measures; or the impact otherwise of the action upon the operation of the site;

(3) The geographic separateness, and the administrative or fiscal relationship of the site or sites in question to any parent corporation or entity;

(4) If applicable, the overall financial resources of any parent corporation or entity; the overall size of the parent corporation or entity with respect to the number of its employees; the number, type, and location of its facilities; and

(5) If applicable, the type of operation or operations of any parent corporation or entity, including the composition, structure, and functions of the workforce of the parent corporation or entity.

Religious entity means a religious organization, including a place of worship.

Service animal means any guide dog, signal dog, or other animal individually trained to do work or perform tasks for the benefit of an individual with a disability, including, but not limited to, guiding individuals with impaired vision, alerting individuals with impaired hearing to intruders or sounds, providing minimal protection or rescue work, pulling a wheelchair, or fetching dropped items.

Specified public transportation means transportation by bus, rail, or any other conveyance (other than by aircraft) that provides the general public with general or special service (including charter service) on a regular and continuing basis.

State means each of the several States, the District of Columbia, the Commonwealth of Puerto Rico, Guam, American Samoa, the Virgin Islands, the Trust Territory of the Pacific Islands, and the Commonwealth of the Northern Mariana Islands.

Undue burden means significant difficulty or expense. In determining whether an action would result in an undue burden, factors to be considered include—

(1) The nature and cost of the action needed under this part;

(2) The overall financial resources of the site or sites involved in the action; the number of persons employed at the site; the effect on expenses and resources; legitimate safety requirements that are necessary for safe operation, including crime prevention measures; or the impact otherwise of the action upon the operation of the site;

(3) The geographic separateness, and the administrative or fiscal relationship of the site or sites in question to any parent corporation or entity;

(4) If applicable, the overall financial resources of any parent corporation or entity; the overall size of the parent corporation or entity with respect to the number of its employees; the number, type, and location of its facilities; and

(5) If applicable, the type of operation or operations of any parent corporation or entity, including the composition, structure, and functions of the workforce of the parent corporation or entity.

§§ 36.105–36.199 [Reserved]

Subpart B—General Requirements

§ 36.201 General.

(a) *Prohibition of discrimination.* No individual shall be discriminated against on the basis of disability in the full and equal enjoyment of the goods, services, facilities, privileges, advantages, or accommodations of any place of public accommodation by any private entity who owns, leases (or leases to), or operates a place of public accommodation.

(b) *Landlord and tenant responsibilities.* Both the landlord who owns the building that houses a place of public accommodation and the tenant who owns or operates the place of public accommodation are public accommodations subject to the requirements of this part. As between the parties, allocation of responsibility for complying with the obligations of this part may be determined by lease or other contract.

§ 36.202 Activities.

(a) *Denial of participation.* A public accommodation shall not subject an individual or class of individuals on the basis of a disability or disabilities of such individual or class, directly, or through contractual, licensing, or other arrangements, to a denial of the opportunity of the individual or class to participate in or benefit from the goods, services, facilities, privileges, advantages, or accommodations of a place of public accommodation.

(b) *Participation in unequal benefit.* A public accommodation shall not afford an individual or class of individuals, on the basis of a disability or disabilities of such individual or class, directly, or through contractual, licensing, or other arrangements, with the opportunity to participate in or benefit from a good, service, facility, privilege, advantage, or accommodation that is not equal to that afforded to other individuals.

(c) *Separate benefit.* A public accommodation shall not provide an individual or class of individuals, on the

basis of a disability or disabilities of such individual or class, directly, or through contractual, licensing, or other arrangements with a good, service, facility, privilege, advantage, or accommodation that is different or separate from that provided to other individuals, unless such action is necessary to provide the individual or class of individuals with a good, service, facility, privilege, advantage, or accommodation, or other opportunity that is as effective as that provided to others.

(d) *Individual or class of individuals.* For purposes of paragraphs (a) through (c) of this section, the term "individual or class of individuals" refers to the clients or customers of the public accommodation that enters into the contractual, licensing, or other arrangement.

§ 36.203 Integrated settings.

(a) *General.* A public accommodation shall afford goods, services, facilities, privileges, advantages, and accommodations to an individual with a disability in the most integrated setting appropriate to the needs of the individual.

(b) *Opportunity to participate.* Notwithstanding the existence of separate or different programs or activities provided in accordance with this subpart, a public accommodation shall not deny an individual with a disability an opportunity to participate in such programs or activities that are not separate or different.

(c) *Accommodations and services.* (1) Nothing in this part shall be construed to require an individual with a disability to accept an accommodation, aid, service, opportunity, or benefit available under this part that such individual chooses not to accept.

(2) Nothing in the Act or this part authorizes the representative or guardian of an individual with a disability to decline food, water, medical treatment, or medical services for that individual.

§ 36.204 Administrative methods.

A public accommodation shall not, directly or through contractual or other arrangements, utilize standards or criteria or methods of administration that have the effect of discriminating on the basis of disability, or that perpetuate the discrimination of others who are subject to common administrative control.

§ 36.205 Association.

A public accommodation shall not exclude or otherwise deny equal goods, services, facilities, privileges, advantages, accommodations, or other opportunities to an individual or entity because of the known disability of an individual with whom the individual or entity is known to have a relationship or association.

§ 36.206 Retaliation or coercion.

(a) No private or public entity shall discriminate against any individual because that individual has opposed any act or practice made unlawful by this part, or because that individual made a charge, testified, assisted, or participated in any manner in an investigation, proceeding, or hearing under the Act or this part.

(b) No private or public entity shall coerce, intimidate, threaten, or interfere with any individual in the exercise or enjoyment of, or on account of his or her having exercised or enjoyed, or on account of his or her having aided or encouraged any other individual in the exercise or enjoyment of, any right granted or protected by the Act or this part.

(c) Illustrations of conduct prohibited by this section include, but are not limited to:

(1) Coercing an individual to deny or limit the benefits, services, or advantages to which he or she is entitled under the Act or this part;

(2) Threatening, intimidating, or interfering with an individual with a disability who is seeking to obtain or use the goods, services, facilities, privileges, advantages, or accommodations of a public accommodation;

(3) Intimidating or threatening any person because that person is assisting or encouraging an individual or group entitled to claim the rights granted or protected by the Act or this part to exercise those rights; or

(4) Retaliating against any person because that person has participated in any investigation or action to enforce the Act or this part.

§ 36.207 Places of public accommodation located in private residences.

(a) When a place of public accommodation is located in a private residence, the portion of the residence used exclusively as a residence is not covered by this part, but that portion used exclusively in the operation of the place of public accommodation or that portion used both for the place of public accommodation and for residential purposes is covered by this part.

(b) The portion of the residence covered under paragraph (a) of this section extends to those elements used to enter the place of public accommodation, including the homeowner's front sidewalk, if any, the door or entryway, and hallways; and those portions of the residence, interior or exterior, available to or used by customers or clients, including restrooms.

§ 36.208 Direct threat.

(a) This part does not require a public accommodation to permit an individual to participate in or benefit from the goods, services, facilities, privileges, advantages and accommodations of that public accommodation when that individual poses a direct threat to the health or safety of others.

(b) *Direct threat* means a significant risk to the health or safety of others that cannot be eliminated by a modification of policies, practices, or procedures, or by the provision of auxiliary aids or services.

(c) In determining whether an individual poses a direct threat to the health or safety of others, a public accommodation must make an individualized assessment, based on reasonable judgment that relies on current medical knowledge or on the best available objective evidence, to ascertain: the nature, duration, and severity of the risk; the probability that the potential injury will actually occur; and whether reasonable modifications of policies, practices, or procedures will mitigate the risk.

§ 36.209 Illegal use of drugs.

(a) *General.* (1) Except as provided in paragraph (b) of this section, this part does not prohibit discrimination against an individual based on that individual's current illegal use of drugs.

(2) A public accommodation shall not discriminate on the basis of illegal use of drugs against an individual who is not engaging in current illegal use of drugs and who—

(i) Has successfully completed a supervised drug rehabilitation program or has otherwise been rehabilitated successfully;

(ii) Is participating in a supervised rehabilitation program; or

(iii) Is erroneously regarded as engaging in such use.

(b) *Health and drug rehabilitation services.* (1) A public accommodation shall not deny health services, or services provided in connection with drug rehabilitation, to an individual on the basis of that individual's current illegal use of drugs, if the individual is otherwise entitled to such services.

(2) A drug rehabilitation or treatment program may deny participation to individuals who engage in illegal use of drugs while they are in the program.

(c) *Drug testing.* (1) This part does not prohibit a public accommodation from adopting or administering reasonable policies or procedures, including but not limited to drug testing, designed to ensure that an individual who formerly engaged in the illegal use of drugs is not now engaging in current illegal use of drugs.

(2) Nothing in this paragraph (c) shall be construed to encourage, prohibit, restrict, or authorize the conducting of testing for the illegal use of drugs.

§ 36.210 Smoking.

This part does not preclude the prohibition of, or the imposition of restrictions on, smoking in places of public accommodation.

§ 36.211 Maintenance of accessible features.

(a) A public accommodation shall maintain in operable working condition those features of facilities and equipment that are required to be readily accessible to and usable by persons with disabilities by the Act or this part.

(b) This section does not prohibit isolated or temporary interruptions in service or access due to maintenance or repairs.

§ 36.212 Insurance.

(a) This part shall not be construed to prohibit or restrict—

(1) An insurer, hospital or medical service company, health maintenance organization, or any agent, or entity that administers benefit plans, or similar organizations from underwriting risks, classifying risks, or administering such risks that are based on or not inconsistent with State law; or

(2) A person or organization covered by this part from establishing, sponsoring, observing or administering the terms of a bona fide benefit plan that are based on underwriting risks, classifying risks, or administering such risks that are based on or not inconsistent with State law; or

(3) A person or organization covered by this part from establishing, sponsoring, observing or administering the terms of a bona fide benefit plan that is not subject to State laws that regulate insurance.

(b) Paragraphs (a) (1), (2), and (3) of this section shall not be used as a subterfuge to evade the purposes of the Act or this part.

(c) A public accommodation shall not refuse to serve an individual with a disability because its insurance company conditions coverage or rates on the absence of individuals with disabilities.

§ 36.213 Relationship of subpart B to subparts C and D of this part.

Subpart B of this part sets forth the general principles of nondiscrimination applicable to all entities subject to this part. Subparts C and D of this part provide guidance on the application of the statute to specific situations. The specific provisions, including the limitations on those provisions, control over the general provisions in circumstances where both specific and general provisions apply.

§§ 36.214–36.299 [Reserved]

Subpart C—Specific Requirements

§ 36.301 Eligibility criteria.

(a) *General.* A public accommodation shall not impose or apply eligibility criteria that screen out or tend to screen out an individual with a disability or any class of individuals with disabilities from fully and equally enjoying any goods, services, facilities, privileges, advantages, or accommodations, unless such criteria can be shown to be necessary for the provision of the goods, services, facilities, privileges, advantages, or accommodations being offered.

(b) *Safety.* A public accommodation may impose legitimate safety requirements that are necessary for safe operation. Safety requirements must be based on actual risks and not on mere speculation, stereotypes, or generalizations about individuals with disabilities.

(c) *Charges.* A public accommodation may not impose a surcharge on a particular individual with a disability or any group of individuals with disabilities to cover the costs of measures, such as the provision of auxiliary aids, barrier removal, alternatives to barrier removal, and reasonable modifications in policies, practices, or procedures, that are required to provide that individual or group with the nondiscriminatory treatment required by the Act or this part.

§ 36.302 Modifications in policies, practices, or procedures.

(a) *General.* A public accommodation shall make reasonable modifications in policies, practices, or procedures, when the modifications are necessary to afford goods, services, facilities, privileges, advantages, or accommodations to individuals with disabilities, unless the public accommodation can demonstrate that making the modifications would fundamentally alter the nature of the goods, services, facilities, privileges, advantages, or accommodations.

(b) *Specialties*—(1) *General.* A public accommodation may refer an individual with a disability to another public accommodation, if that individual is seeking, or requires, treatment or services outside of the referring public accommodation's area of specialization, and if, in the normal course of its operations, the referring public accommodation would make a similar referral for an individual without a disability who seeks or requires the same treatment or services.

(2) *Illustration—medical specialties.* A health care provider may refer an individual with a disability to another provider, if that individual is seeking, or requires, treatment or services outside of the referring provider's area of specialization, and if the referring provider would make a similar referral for an individual without a disability who seeks or requires the same treatment or services. A physician who specializes in treating only a particular condition cannot refuse to treat an individual with a disability for that condition, but is not required to treat the individual for a different condition.

(c) *Service animals*—(1) *General.* Generally, a public accommodation shall modify policies, practices, or procedures to permit the use of a service animal by an individual with a disability.

(2) *Care or supervision of service animals.* Nothing in this part requires a public accommodation to supervise or care for a service animal.

(d) *Check-out aisles.* A store with check-out aisles shall ensure that an adequate number of accessible check-out aisles are kept open during store hours, or shall otherwise modify its policies and practices, in order to ensure that an equivalent level of convenient service is provided to individuals with disabilities as is provided to others. If only one check-out aisle is accessible, and it is generally used for express service, one way of providing equivalent service is to allow persons with mobility impairments to make all their purchases at that aisle.

§ 36.303 Auxiliary aids and services.

(a) *General.* A public accommodation shall take those steps that may be necessary to ensure that no individual with a disability is excluded, denied services, segregated or otherwise treated differently than other individuals because of the absence of auxiliary aids and services, unless the public accommodation can demonstrate that taking those steps would fundamentally alter the nature of the goods, services, facilities, privileges, advantages, or accommodations being offered or would result in an undue burden, i.e., significant difficulty or expense.

(b) *Examples.* The term "auxiliary aids and services" includes—

(1) Qualified interpreters, notetakers, computer-aided transcription services, written materials, telephone handset amplifiers, assistive listening devices, assistive listening systems, telephones compatible with hearing aids, closed caption decoders, open and closed captioning, telecommunications devices for deaf persons (TDD's), videotext displays, or other effective methods of making aurally delivered materials available to individuals with hearing impairments;

(2) Qualified readers, taped texts, audio recordings, Brailled materials, large print materials, or other effective methods of making visually delivered materials available to individuals with visual impairments;

(3) Acquisition or modification of equipment or devices; and

(4) Other similar services and actions.

(c) *Effective communication.* A public accommodation shall furnish appropriate auxiliary aids and services where necessary to ensure effective communication with individuals with disabilities.

(d) *Telecommunication devices for the deaf (TDD's).* (1) A public accommodation that offers a customer, client, patient, or participant the opportunity to make outgoing telephone calls on more than an incidental convenience basis shall make available, upon request, a TDD for the use of an individual who has impaired hearing or a communication disorder.

(2) This part does not require a public accommodation to use a TDD for receiving or making telephone calls incident to its operations.

(e) *Closed caption decoders.* Places of lodging that provide televisions in five or more guest rooms and hospitals that provide televisions for patient use shall provide, upon request, a means for decoding captions for use by an individual with impaired hearing.

(f) *Alternatives.* If provision of a particular auxiliary aid or service by a public accommodation would result in a fundamental alteration in the nature of the goods, services, facilities, privileges, advantages, or accommodations being offered or in an undue burden,

i.e., significant difficulty or expense, the public accommodation shall provide an alternative auxiliary aid or service, if one exists, that would not result in an alteration or such burden but would nevertheless ensure that, to the maximum extent possible, individuals with disabilities receive the goods, services, facilities, privileges, advantages, or accommodations offered by the public accommodation.

§ 36.304 Removal of barriers.

(a) *General.* A public accommodation shall remove architectural barriers in existing facilities, including communication barriers that are structural in nature, where such removal is readily achievable, i.e., easily accomplishable and able to be carried out without much difficulty or expense.

(b) *Examples.* Examples of steps to remove barriers include, but are not limited to, the following actions—

(1) Installing ramps;

(2) Making curb cuts in sidewalks and entrances;

(3) Repositioning shelves;

(4) Rearranging tables, chairs, vending machines, display racks, and other furniture;

(5) Repositioning telephones;

(6) Adding raised markings on elevator control buttons;

(7) Installing flashing alarm lights;

(8) Widening doors;

(9) Installing offset hinges to widen doorways;

(10) Eliminating a turnstile or providing an alternative accessible path;

(11) Installing accessible door hardware;

(12) Installing grab bars in toilet stalls;

(13) Rearranging toilet partitions to increase maneuvering space;

(14) Insulating lavatory pipes under sinks to prevent burns;

(15) Installing a raised toilet seat;

(16) Installing a full-length bathroom mirror;

(17) Repositioning the paper towel dispenser in a bathroom;

(18) Creating designated accessible parking spaces;

(19) Installing an accessible paper cup dispenser at an existing inaccessible water fountain;

(20) Removing high pile, low density carpeting; or

(21) Installing vehicle hand controls.

(c) *Priorities.* A public accommodation is urged to take measures to comply with the barrier removal requirements of this section in accordance with the following order of priorities.

(1) First, a public accommodation should take measures to provide access to a place of public accommodation from public sidewalks, parking, or public transportation. These measures include, for example, installing an entrance ramp, widening entrances, and providing accessible parking spaces.

(2) Second, a public accommodation should take measures to provide access to those areas of a place of public accommodation where goods and services are made available to the public. These measures include, for example, adjusting the layout of display racks, rearranging tables, providing Brailled and raised character signage, widening doors, providing visual alarms, and installing ramps.

(3) Third, a public accommodation should take measures to provide access to restroom facilities. These measures include, for example, removal of obstructing furniture or vending machines, widening of doors, installation of ramps, providing accessible signage, widening of toilet stalls, and installation of grab bars.

(4) Fourth, a public accommodation should take any other measures necessary to provide access to the goods, services, facilities, privileges, advantages, or accommodations of a place of public accommodation.

(d) *Relationship to alterations requirements of subpart D of this part.* (1) Except as provided in paragraph (d)(2) of this section, measures taken to comply with the barrier removal requirements of this section shall comply with the applicable requirements for alterations in § 36.402 and §§ 36.404–36.406 of this part for the element being altered. The path of travel requirements of § 36.403 shall not apply to measures taken solely to comply with the barrier removal requirements of this section.

(2) If, as a result of compliance with the alterations requirements specified in paragraph (d)(1) of this section, the measures required to remove a barrier

would not be readily achievable, a public accommodation may take other readily achievable measures to remove the barrier that do not fully comply with the specified requirements. Such measures include, for example, providing a ramp with a steeper slope or widening a doorway to a narrower width than that mandated by the alterations requirements. No measure shall be taken, however, that poses a significant risk to the health or safety of individuals with disabilities or others.

(e) *Portable ramps.* Portable ramps should be used to comply with this section only when installation of a permanent ramp is not readily achievable. In order to avoid any significant risk to the health or safety of individuals with disabilities or others in using portable ramps, due consideration shall be given to safety features such as nonslip surfaces, railings, anchoring, and strength of materials.

(f) *Selling or serving space.* The rearrangement of temporary or movable structures, such as furniture, equipment, and display racks is not readily achievable to the extent that it results in a significant loss of selling or serving space.

(g) *Limitation on barrier removal obligations.* (1) The requirements for barrier removal under § 36.304 shall not be interpreted to exceed the standards for alterations in subpart D of this part.

(2) To the extent that relevant standards for alterations are not provided in subpart D of this part, then the requirements of § 36.304 shall not be interpreted to exceed the standards for new construction in subpart D of this part.

(3) This section does not apply to rolling stock and other conveyances to the extent that § 36.310 applies to rolling stock and other conveyances.

§ 36.305 Alternatives to barrier removal.

(a) *General.* Where a public accommodation can demonstrate that barrier removal is not readily achievable, the public accommodation shall not fail to make its goods, services, facilities, privileges, advantages, or accommodations available through alternative methods, if those methods are readily achievable.

(b) *Examples.* Examples of alternatives to barrier removal include, but are not limited to, the following actions—

(1) Providing curb service or home delivery;

(2) Retrieving merchandise from inaccessible shelves or racks;

(3) Relocating activities to accessible locations;

(c) *Multiscreen cinemas.* If it is not readily achievable to remove barriers to provide access by persons with mobility impairments to all of the theaters of a multiscreen cinema, the cinema shall establish a film rotation schedule that provides reasonable access for individuals who use wheelchairs to all films. Reasonable notice shall be provided to the public as to the location and time of accessible showings.

§ 36.306 Personal devices and services.

This part does not require a public accommodation to provide its customers, clients, or participants with personal devices, such as wheelchairs; individually prescribed devices, such as prescription eyeglasses or hearing aids; or services of a personal nature including assistance in eating, toileting, or dressing.

§ 36.307 Accessible or special goods.

(a) This part does not require a public accommodation to alter its inventory to include accessible or special goods that are designed for, or facilitate use by, individuals with disabilities.

(b) A public accommodation shall order accessible or special goods at the request of an individual with disabilities, if, in the normal course of its operation, it makes special orders on request for unstocked goods, and if the accessible or special goods can be obtained from a supplier with whom the public accommodation customarily does business.

(c) Examples of accessible or special goods include items such as Brailled versions of books, books on audio cassettes, closed-captioned video tapes, special sizes or lines of clothing, and special foods to meet particular dietary needs.

§ 36.308 Seating in assembly areas.

(a) *Existing facilities.* (1) To the extent that it is readily achievable, a public accommodation in assembly areas shall—

(i) Provide a reasonable number of wheelchair seating spaces and seats with removable aisle-side arm rests; and

(ii) Locate the wheelchair seating spaces so that they—

(A) Are dispersed throughout the seating area;

(B) Provide lines of sight and choice of admission prices comparable to those for members of the general public;

(C) Adjoin an accessible route that also serves as a means of egress in case of emergency; and

(D) Permit individuals who use wheelchairs to sit with family members or other companions.

(2) If removal of seats is not readily achievable, a public accommodation shall provide, to the extent that it is readily achievable to do so, a portable chair or other means to permit a family member or other companion to sit with an individual who uses a wheelchair.

(3) The requirements of paragraph (a) of this section shall not be interpreted to exceed the standards for alterations in subpart D of this part.

(b) *New construction and alterations.* The provision and location of wheelchair seating spaces in newly constructed or altered assembly areas shall be governed by the standards for new construction and alterations in subpart D of this part.

§ 36.309 Examinations and courses.

(a) *General.* Any private entity that offers examinations or courses related to applications, licensing, certification, or credentialing for secondary or postsecondary education, professional, or trade purposes shall offer such examinations or courses in a place and manner accessible to persons with disabilities or offer alternative accessible arrangements for such individuals.

(b) *Examinations.* (1) Any private entity offering an examination covered by this section must assure that—

(i) The examination is selected and administered so as to best ensure that, when the examination is administered to an individual with a disability that impairs sensory, manual, or speaking skills, the examination results accurately reflect the individual's aptitude or achievement level or whatever other factor the examination purports to measure, rather than reflecting the individual's impaired sensory, manual, or speaking skills (except where those skills are the factors that the examination purports to measure);

(ii) An examination that is designed for individuals with impaired sensory, manual, or speaking skills is offered at equally convenient locations, as often, and in as timely a manner as are other examinations; and

(iii) The examination is administered in facilities that are accessible to individuals with disabilities or alternative accessible arrangements are made.

(2) Required modifications to an examination may include changes in the length of time permitted for completion of the examination and adaptation of the manner in which the examination is given.

(3) A private entity offering an examination covered by this section shall provide appropriate auxiliary aids for persons with impaired sensory, manual, or speaking skills, unless that private entity can demonstrate that offering a particular auxiliary aid would fundamentally alter the measurement of the skills or knowledge the examination is intended to test or would result in an undue burden. Auxiliary aids and services required by this section may include taped examinations, interpreters or other effective methods of making orally delivered materials available to individuals with hearing impairments, Brailled or large print examinations and answer sheets or qualified readers for individuals with visual impairments or learning disabilities, transcribers for individuals with manual impairments, and other similar services and actions.

(4) Alternative accessible arrangements may include, for example, provision of an examination at an individual's home with a proctor if accessible facilities or equipment are unavailable.

Alternative arrangements must provide comparable conditions to those provided for nondisabled individuals.

(c) *Courses.* (1) Any private entity that offers a course covered by this section must make such modifications to that course as are necessary to ensure that the place and manner in which the course is given are accessible to individuals with disabilities.

(2) Required modifications may include changes in the length of time permitted for the completion of the course, substitution of specific requirements, or adaptation of the manner in which the course is conducted or course materials are distributed.

(3) A private entity that offers a course covered by this section shall provide appropriate auxiliary aids and services for persons with impaired sensory, manual, or speaking skills, unless the private entity can demonstrate that offering a particular auxiliary aid or service would fundamentally alter the course or would result in an undue burden. Auxiliary aids and services required by this section may include taped texts, interpreters or other effective methods of making orally delivered materials available to individuals with hearing impairments, Brailled or large print texts or qualified readers for individuals with visual impairments and learning disabilities, classroom equipment adapted for use by individuals with manual impairments, and other similar services and actions.

(4) Courses must be administered in facilities that are accessible to individuals with disabilities or alternative accessible arrangements must be made.

(5) Alternative accessible arrangements may include, for example, provision of the course through videotape, cassettes, or prepared notes. Alternative arrangements must provide comparable conditions to those provided for nondisabled individuals.

§ 36.310 Transportation provided by public accommodations.

(a) *General.* (1) A public accommodation that provides transportation services, but that is not primarily engaged in the business of transporting people, is subject to the general and specific provisions in subparts B, C, and D of this part for its transportation operations, except as provided in this section.

(2) *Examples.* Transportation services subject to this section include, but are not limited to, shuttle services operated between transportation terminals and places of public accommodation, customer shuttle bus services operated by private companies and shopping centers, student transportation systems, and transportation provided within recreational facilities such as stadiums, zoos, amusement parks, and ski resorts.

(b) *Barrier removal.* A public accommodation subject to this section shall remove transportation barriers in existing vehicles and rail passenger cars used for transporting individuals (not including barriers that can only be removed through the retrofitting of vehicles or rail passenger cars by the installation of a hydraulic or other lift) where such removal is readily achievable.

(c) *Requirements for vehicles and systems.* A public accommodation subject to this section shall comply with the requirements pertaining to vehicles and transportation systems in the regulations issued by the Secretary of Transportation pursuant to section 306 of the Act.

§§ 36.311—36.399 [Reserved]

Subpart D—New Construction and Alterations

§ 36.401 New construction.

(a) *General.* (1) Except as provided in paragraphs (b) and (c) of this section, discrimination for purposes of this part includes a failure to design and construct facilities for first occupancy after January 26, 1993, that are readily accessible to and usable by individuals with disabilities.

(2) For purposes of this section, a facility is designed and constructed for first occupancy after January 26, 1993, only—

(i) If the last application for a building permit or permit extension for the facility is certified to be complete, by a State, County, or local government after January 26, 1992 (or, in those jurisdictions where the government does not certify completion of applications,

if the last application for a building permit or permit extension for the facility is received by the State, County, or local government after January 26, 1992); and

(ii) If the first certificate of occupancy for the facility is issued after January 26, 1993.

(b) *Commercial facilities located in private residences.* (1) When a commercial facility is located in a private residence, the portion of the residence used exclusively as a residence is not covered by this subpart, but that portion used exclusively in the operation of the commercial facility or that portion used both for the commercial facility and for residential purposes is covered by the new construction and alterations requirements of this subpart.

(2) The portion of the residence covered under paragraph (b)(1) of this section extends to those elements used to enter the commercial facility, including the homeowner's front sidewalk, if any, the door or entryway, and hallways; and those portions of the residence, interior or exterior, available to or used by employees or visitors of the commercial facility, including restrooms.

(c) *Exception for structural impracticability.* (1) Full compliance with the requirements of this section is not required where an entity can demonstrate that it is structurally impracticable to meet the requirements. Full compliance will be considered structurally impracticable only in those rare circumstances when the unique characteristics of terrain prevent the incorporation of accessibility features.

(2) If full compliance with this section would be structurally impracticable, compliance with this section is required to the extent that it is not structurally impracticable. In that case, any portion of the facility that can be made accessible shall be made accessible to the extent that it is not structurally impracticable.

(3) If providing accessibility in conformance with this section to individuals with certain disabilities (e.g., those who use wheelchairs) would be structurally impracticable, accessibility shall nonetheless be ensured to persons with other types of disabilities (e.g., those who use crutches or who have sight, hearing, or mental impairments) in accordance with this section.

(d) *Elevator exemption.* (1) For purposes of this paragraph (d)—

(i) *Professional office of a health care provider* means a location where a person or entity regulated by a State to provide professional services related to the physical or mental health of an individual makes such services available to the public. The facility housing the "professional office of a health care provider" only includes floor levels housing at least one health care provider, or any floor level designed or intended for use by at least one health care provider.

(ii) *Shopping center or shopping mall means*—

(A) A building housing five or more sales or rental establishments; or

(B) A series of buildings on a common site, either under common ownership or common control or developed either as one project or as a series of related projects, housing five or more sales or rental establishments. For purposes of this section, places of public accommodation of the types listed in paragraph (5) of the definition of "place of public accommodation" in section § 36.104 are considered sales or rental establishments. The facility housing a "shopping center or shopping mall" only includes floor levels housing at least one sales or rental establishment, or any floor level designed or intended for use by at least one sales or rental establishment.

(2) This section does not require the installation of an elevator in a facility that is less than three stories or has less than 3000 square feet per story, except with respect to any facility that houses one or more of the following:

(i) A shopping center or shopping mall, or a professional office of a health care provider.

(ii) A terminal, depot, or other station used for specified public transportation, or an airport passenger terminal. In such a facility, any area housing passenger services, including boarding and debarking, loading and unloading, baggage claim, dining facilities, and other common areas open to the public, must be on an accessible route from an accessible entrance.

(3) The elevator exemption set forth in this paragraph (d) does not obviate

or limit, in any way the obligation to comply with the other accessibility requirements established in paragraph (a) of this section. For example, in a facility that houses a shopping center or shopping mall, or a professional office of a health care provider, the floors that are above or below an accessible ground floor and that do not house sales or rental establishments or a professional office of a health care provider, must meet the requirements of this section but for the elevator.

§ 36.402 Alterations.

(a) *General.* (1) Any alteration to a place of public accommodation or a commercial facility, after January 26, 1992, shall be made so as to ensure that, to the maximum extent feasible, the altered portions of the facility are readily accessible to and usable by individuals with disabilities, including individuals who use wheelchairs.

(2) An alteration is deemed to be undertaken after January 26, 1992, if the physical alteration of the property begins after that date.

(b) *Alteration.* For the purposes of this part, an alteration is a change to a place of public accommodation or a commercial facility that affects or could affect the usability of the building or facility or any part thereof.

(1) Alterations include, but are not limited to, remodeling, renovation, rehabilitation, reconstruction, historic restoration, changes or rearrangement in structural parts or elements, and changes or rearrangement in the plan configuration of walls and full-height partitions. Normal maintenance, reroofing, painting or wallpapering, asbestos removal, or changes to mechanical and electrical systems are not alterations unless they affect the usability of the building or facility.

(2) If existing elements, spaces, or common areas are altered, then each such altered element, space, or area shall comply with the applicable provisions of appendix A to this part.

(c) *To the maximum extent feasible.* The phrase "to the maximum extent feasible," as used in this section, applies to the occasional case where the nature of an existing facility makes it virtually impossible to comply fully with applicable accessibility standards through a planned alteration. In these circumstances, the alteration shall provide the maximum physical accessibility feasible. Any altered features of the facility that can be made accessible shall be made accessible. If providing accessibility in conformance with this section to individuals with certain disabilities (e.g., those who use wheelchairs) would not be feasible, the facility shall be made accessible to persons with other types of disabilities (e.g., those who use crutches, those who have impaired vision or hearing, or those who have other impairments).

§ 36.403 Alterations: Path of travel.

(a) *General.* An alteration that affects or could affect the usability of or access to an area of a facility that contains a primary function shall be made so as to ensure that, to the maximum extent feasible, the path of travel to the altered area and the restrooms, telephones, and drinking fountains serving the altered area, are readily accessible to and usable by individuals with disabilities, including individuals who use wheelchairs, unless the cost and scope of such alterations is disproportionate to the cost of the overall alteration.

(b) *Primary function.* A "primary function" is a major activity for which the facility is intended. Areas that contain a primary function include, but are not limited to, the customer services lobby of a bank, the dining area of a cafeteria, the meeting rooms in a conference center, as well as offices and other work areas in which the activities of the public accommodation or other private entity using the facility are carried out. Mechanical rooms, boiler rooms, supply storage rooms, employee lounges or locker rooms, janitorial closets, entrances, corridors, and restrooms are not areas containing a primary function.

(c) *Alterations to an area containing a primary function.* (1) Alterations that affect the usability of or access to an area containing a primary function include, but are not limited to—

(i) Remodeling merchandise display areas or employee work areas in a department store;

(ii) Replacing an inaccessible floor surface in the customer service or employee work areas of a bank;

(iii) Redesigning the assembly line area of a factory; or

(iv) Installing a computer center in an accounting firm.

(2) For the purposes of this section, alterations to windows, hardware, controls, electrical outlets, and signage shall not be deemed to be alterations that affect the usability of or access to an area containing a primary function.

(d) *Landlord/tenant:* If a tenant is making alterations as defined in § 36.402 that would trigger the requirements of this section, those alterations by the tenant in areas that only the tenant occupies do not trigger a path of travel obligation upon the landlord with respect to areas of the facility under the landlord's authority, if those areas are not otherwise being altered.

(e) *Path of travel.* (1) A "path of travel" includes a continuous, unobstructed way of pedestrian passage by means of which the altered area may be approached, entered, and exited, and which connects the altered area with an exterior approach (including sidewalks, streets, and parking areas), an entrance to the facility, and other parts of the facility.

(2) An accessible path of travel may consist of walks and sidewalks, curb ramps and other interior or exterior pedestrian ramps; clear floor paths through lobbies, corridors, rooms, and other improved areas; parking access aisles; elevators and lifts; or a combination of these elements.

(3) For the purposes of this part, the term "path of travel" also includes the restrooms, telephones, and drinking fountains serving the altered area.

(f) *Disproportionality.* (1) Alterations made to provide an accessible path of travel to the altered area will be deemed disproportionate to the overall alteration when the cost exceeds 20% of the cost of the alteration to the primary function area.

(2) Costs that may be counted as expenditures required to provide an accessible path of travel may include:

(i) Costs associated with providing an accessible entrance and an accessible route to the altered area, for example, the cost of widening doorways or installing ramps;

(ii) Costs associated with making restrooms accessible, such as installing grab bars, enlarging toilet stalls, insulating pipes, or installing accessible faucet controls;

(iii) Costs associated with providing accessible telephones, such as relocating the telephone to an accessible height, installing amplification devices, or installing a telecommunications device for deaf persons (TDD);

(iv) Costs associated with relocating an inaccessible drinking fountain.

(g) *Duty to provide accessible features in the event of disproportionality.* (1) When the cost of alterations necessary to make the path of travel to the altered area fully accessible is disproportionate to the cost of the overall alteration, the path of travel shall be made accessible to the extent that it can be made accessible without incurring disproportionate costs.

(2) In choosing which accessible elements to provide, priority should be given to those elements that will provide the greatest access, in the following order:

(i) An accessible entrance;

(ii) An accessible route to the altered area;

(iii) At least one accessible restroom for each sex or a single unisex restroom;

(iv) Accessible telephones;

(v) Accessible drinking fountains; and

(vi) When possible, additional accessible elements such as parking, storage, and alarms.

(h) *Series of smaller alterations.* (1) The obligation to provide an accessible path of travel may not be evaded by performing a series of small alterations to the area served by a single path of travel if those alterations could have been performed as a single undertaking.

(2)(i) If an area containing a primary function has been altered without providing an accessible path of travel to that area, and subsequent alterations of that area, or a different area on the same path of travel, are undertaken within three years of the original alteration, the total cost of alterations to the primary function areas on that

path of travel during the preceding three year period shall be considered in determining whether the cost of making that path of travel accessible is disproportionate.

(ii) Only alterations undertaken after January 26, 1992, shall be considered in determining if the cost of providing an accessible path of travel is disproportionate to the overall cost of the alterations.

§ 36.404 Alterations: Elevator exemption.

(a) This section does not require the installation of an elevator in an altered facility that is less than three stories or has less than 3,000 square feet per story, except with respect to any facility that houses a shopping center, a shopping mall, the professional office of a health care provider, a terminal, depot, or other station used for specified public transportation, or an airport passenger terminal.

(1) For the purposes of this section, *professional office of a health care provider* means a location where a person or entity regulated by a State to provide professional services related to the physical or mental health of an individual makes such services available to the public. The facility that houses a *professional office of a health care provider* only includes floor levels housing by at least one health care provider, or any floor level designed or intended for use by at least one health care provider.

(2) For the purposes of this section, *shopping center or shopping mall* means—

(i) A building housing five or more sales or rental establishments; or

(ii) A series of buildings on a common site, connected by a common pedestrian access route above or below the ground floor, that is either under common ownership or common control or developed either as one project or as a series of related projects, housing five or more sales or rental establishments. For purposes of this section, places of public accommodation of the types listed in paragraph (5) of the definition of *place of public accommodation* in § 36.104 are considered sales or rental establishments. The facility housing a *shopping center or shopping mall* only includes floor levels housing at least one sales or rental establishment, or any floor level designed or intended for use by at least one sales or rental establishment.

(b) The exemption provided in paragraph (a) of this section does not obviate or limit in any way the obligation to comply with the other accessibility requirements established in this subpart. For example, alterations to floors above or below the accessible ground floor must be accessible regardless of whether the altered facility has an elevator.

§ 36.405 Alterations: Historic preservation.

(a) Alterations to buildings or facilities that are eligible for listing in the National Register of Historic Places under the National Historic Preservation Act (16 U.S.C. 470 *et seq.*), or are designated as historic under State or local law, shall comply to the maximum extent feasible with section 4.1.7 of appendix A to this part.

(b) If it is determined under the procedures set out in section 4.1.7 of appendix A that it is not feasible to provide physical access to an historic property that is a place of public accommodation in a manner that will not threaten or destroy the historic significance of the building or facility, alternative methods of access shall be provided pursuant to the requirements of subpart C of this part.

§ 36.406 Standards for new construction and alterations.

(a) New construction and alterations subject to this part shall comply with the standards for accessible design published as appendix A to this part (ADAAG).

(b) The chart in the appendix to this section provides guidance to the user in reading appendix A to this part (ADAAG) together with subparts A through D of this part, when determining requirements for a particular facility.

APPENDIX TO § 36.406

This chart has no effect for purposes of compliance or enforcement. It does not necessarily provide complete or mandatory information.

	Subparts A–D	ADAAG
Application, General.	36.102(b)(3): public accommodations. 36.102(c): commercial facilities. 36.102(e): public entities. 36.103 (other laws) 36.401 ("for first occupancy"). 36.402(a) (alterations).	1, 2, 3, 4.1.1.
Definitions	36.104: commercial facilities, facility, place of public accommodation, private club, public accommodation, public entity, religious entity.	3.5 Definitions, including: addition, alteration, building, element, facility, space, story.
	36.401(d)(1)(ii), 36.404(a)(2): shopping center or shopping mall. 36.401(d)(1)(i), 36.404(a)(1): professional office of a health care provider. 36.402: alteration; usability. 36.402(c): to the maximum extent feasible.	4.1.6(j), technical infeasibility.
New Construction:.	36.401(a) General ..	4.1.2.
General	36.401(b) Commercial facilities in private residences. 36.207 Places of public accommodation in private residences.	4.1.3.
Work Areas	.....	4.1.1(3).
Structural Impracticability.	36.401(c)	4.1.1(5)(a).
Elevator Exemption.	36.401(d) 36.404	4.1.3(5).
Other Exceptions.	.....	4.1.1(5), 4.1.3(5) and throughout.
Alterations: General.	36.401(b): commercial facilities in private residences.	
	36.402	4.1.6(1).
Alterations Affecting an Area Containing A Primary Function; Path of Travel; Disproportionality.	36.403	4.1.6(2).
Alterations: Special Technical Provisions.	.....	4.1.6(3).
Additions	36.401–36.405	4.1.5.
Historic Preservation.	36.405	4.1.7.
Technical Provisions.	.....	4.2 through 4.35.
Restaurants and Cafeterias.	.....	5.
Medical Care Facilities.	.....	6.
Business and Mercantile.	.....	7.
Libraries	.....	8.
Transient Lodging (Hotels, Homeless Shelters, Etc.).	.....	9.
Transportation Facilities.	.....	10.

[Order No. 1513–91, 56 FR 35592, July 26, 1991, as amended by Order No. 1836–94, 59 FR 2675, Jan. 18, 1994]

§ 36.407 Temporary suspension of certain detectable warning requirements.

The detectable warning requirements contained in sections 4.7.7, 4.29.5, and 4.29.6 of appendix A to this part are suspended temporarily until July 26, 2001.

[Order No. 2191–98, 63 FR 64837, 64838, Nov. 23, 1998]

§§ 36.408–36.499 [Reserved]

Subpart E—Enforcement

§ 36.501 Private suits.

(a) *General.* Any person who is being subjected to discrimination on the basis of disability in violation of the Act or this part or who has reasonable grounds for believing that such person is about to be subjected to discrimination in violation of section 303 of the Act or subpart D of this part may institute a civil action for preventive relief, including an application for a permanent or temporary injunction, restraining order, or other order. Upon timely application, the court may, in its discretion, permit the Attorney General to intervene in the civil action if the Attorney General or his or her designee certifies that the case is of general public importance. Upon application by the complainant and in such circumstances as the court may deem just, the court may appoint an attorney for such complainant and may authorize the commencement of the civil action without the payment of fees, costs, or security. Nothing in this section shall require a person with a disability to engage in a futile gesture if

the person has actual notice that a person or organization covered by title III of the Act or this part does not intend to comply with its provisions.

(b) *Injunctive relief.* In the case of violations of § 36.304, §§ 36.308, 36.310(b), 36.401, 36.402, 36.403, and 36.405 of this part, injunctive relief shall include an order to alter facilities to make such facilities readily accessible to and usable by individuals with disabilities to the extent required by the Act or this part. Where appropriate, injunctive relief shall also include requiring the provision of an auxiliary aid or service, modification of a policy, or provision of alternative methods, to the extent required by the Act or this part.

§ 36.502 Investigations and compliance reviews.

(a) The Attorney General shall investigate alleged violations of the Act or this part.

(b) Any individual who believes that he or she or a specific class of persons has been subjected to discrimination prohibited by the Act or this part may request the Department to institute an investigation.

(c) Where the Attorney General has reason to believe that there may be a violation of this part, he or she may initiate a compliance review.

§ 36.503 Suit by the Attorney General.

Following a compliance review or investigation under § 36.502, or at any other time in his or her discretion, the Attorney General may commence a civil action in any appropriate United States district court if the Attorney General has reasonable cause to believe that—

(a) Any person or group of persons is engaged in a pattern or practice of discrimination in violation of the Act or this part; or

(b) Any person or group of persons has been discriminated against in violation of the Act or this part and the discrimination raises an issue of general public importance.

§ 36.504 Relief.

(a) *Authority of court.* In a civil action under § 36.503, the court—

(1) May grant any equitable relief that such court considers to be appropriate, including, to the extent required by the Act or this part—

(i) Granting temporary, preliminary, or permanent relief;

(ii) Providing an auxiliary aid or service, modification of policy, practice, or procedure, or alternative method; and

(iii) Making facilities readily accessible to and usable by individuals with disabilities;

(2) May award other relief as the court considers to be appropriate, including monetary damages to persons aggrieved when requested by the Attorney General; and

(3) May, to vindicate the public interest, assess a civil penalty against the entity in an amount

(i) Not exceeding $50,000 for a first violation occurring before September 29, 1999, and not exceeding $55,000 for a first violation occurring on or after September 29, 1999; and

(ii) Not exceeding $100,000 for any subsequent violation occurring before September 29, 1999, and not exceeding $110,000 for any subsequent violation occurring on or after September 29, 1999.

(b) *Single violation.* For purposes of paragraph (a) (3) of this section, in determining whether a first or subsequent violation has occurred, a determination in a single action, by judgment or settlement, that the covered entity has engaged in more than one discriminatory act shall be counted as a single violation.

(c) *Punitive damages.* For purposes of paragraph (a)(2) of this section, the terms "monetary damages" and "such other relief" do not include punitive damages.

(d) *Judicial consideration.* In a civil action under § 36.503, the court, when considering what amount of civil penalty, if any, is appropriate, shall give consideration to any good faith effort or attempt to comply with this part by the entity. In evaluating good faith, the court shall consider, among other factors it deems relevant, whether the entity could have reasonably anticipated the need for an appropriate type of auxiliary aid needed to accommodate

the unique needs of a particular individual with a disability.

[Order No. 1513–91, 56 FR 35592, July 26, 1991, as amended by Order No. 2249–99, 64 FR 47103, Aug. 30, 1999]

§ 36.505 Attorneys fees.

In any action or administrative proceeding commenced pursuant to the Act or this part, the court or agency, in its discretion, may allow the prevailing party, other than the United States, a reasonable attorney's fee, including litigation expenses, and costs, and the United States shall be liable for the foregoing the same as a private individual.

§ 36.506 Alternative means of dispute resolution.

Where appropriate and to the extent authorized by law, the use of alternative means of dispute resolution, including settlement negotiations, conciliation, facilitation, mediation, fact-finding, minitrials, and arbitration, is encouraged to resolve disputes arising under the Act and this part.

§ 36.507 Effect of unavailability of technical assistance.

A public accommodation or other private entity shall not be excused from compliance with the requirements of this part because of any failure to receive technical assistance, including any failure in the development or dissemination of any technical assistance manual authorized by the Act.

§ 36.508 Effective date.

(a) *General.* Except as otherwise provided in this section and in this part, this part shall become effective on January 26, 1992.

(b) *Civil actions.* Except for any civil action brought for a violation of section 303 of the Act, no civil action shall be brought for any act or omission described in section 302 of the Act that occurs—

(1) Before July 26, 1992, against businesses with 25 or fewer employees and gross receipts of $1,000,000 or less.

(2) Before January 26, 1993, against businesses with 10 or fewer employees and gross receipts of $500,000 or less.

(c) *Transportation services provided by public accommodations.* Newly purchased or leased vehicles required to be accessible by § 36.310 must be readily accessible to and usable by individuals with disabilities, including individuals who use wheelchairs, if the solicitation for the vehicle is made after August 25, 1990.

§§ 36.509–36.599 [Reserved]

Subpart F—Certification of State Laws or Local Building Codes

§ 36.601 Definitions.

Assistant Attorney General means the Assistant Attorney General for Civil Rights or his or her designee.

Certification of equivalency means a final certification that a code meets or exceeds the minimum requirements of title III of the Act for accessibility and usability of facilities covered by that title.

Code means a State law or local building code or similar ordinance, or part thereof, that establishes accessibility requirements.

Model code means a nationally recognized document developed by a private entity for use by State or local jurisdictions in developing codes as defined in this section. A model code is intended for incorporation by reference or adoption in whole or in part, with or without amendment, by State or local jurisdictions.

Preliminary determination of equivalency means a preliminary determination that a code appears to meet or exceed the minimum requirements of title III of the Act for accessibility and usability of facilities covered by that title.

Submitting official means the State or local official who—

(1) Has principal responsibility for administration of a code, or is authorized to submit a code on behalf of a jurisdiction; and

(2) Files a request for certification under this subpart.

§ 36.602 General rule.

On the application of a State or local government, the Assistant Attorney General may certify that a code meets or exceeds the minimum requirements of the Act for the accessibility and

usability of places of public accommodation and commercial facilities under this part by issuing a certification of equivalency. At any enforcement proceeding under title III of the Act, such certification shall be rebuttable evidence that such State law or local ordinance does meet or exceed the minimum requirements of title III.

§ 36.603 Filing a request for certification.

(a) A submitting official may file a request for certification of a code under this subpart.

(b) Before filing a request for certification of a code, the submitting official shall ensure that—

(1) Adequate public notice of intention to file a request for certification, notice of a hearing, and notice of the location at which the request and materials can be inspected is published within the relevant jurisdiction;

(2) Copies of the proposed request and supporting materials are made available for public examination and copying at the office of the State or local agency charged with administration and enforcement of the code; and

(3) The local or State jurisdiction holds a public hearing on the record, in the State or locality, at which the public is invited to comment on the proposed request for certification.

(c) The submitting official shall include the following materials and information in support of the request:

(1) The text of the jurisdiction's code; any standard, regulation, code, or other relevant document incorporated by reference or otherwise referenced in the code; the law creating and empowering the agency; any relevant manuals, guides, or any other interpretive information issued that pertain to the code; and any formal opinions of the State Attorney General or the chief legal officer of the jurisdiction that pertain to the code;

(2) Any model code or statute on which the pertinent code is based, and an explanation of any differences between the model and the pertinent code;

(3) A transcript of the public hearing required by paragraph (b)(3) of this section; and

(4) Any additional information that the submitting official may wish to be considered.

(d) The submitting official shall file the original and one copy of the request and of supporting materials with the Assistant Attorney General. The submitting official shall clearly label the request as a "request for certification" of a code. A copy of the request and supporting materials will be available for public examination and copying at the offices of the Assistant Attorney General in Washington, DC. The submitting official shall ensure that copies of the request and supporting materials are available for public examination and copying at the office of the State or local agency charged with administration and enforcement of the code. The submitting official shall ensure that adequate public notice of the request for certification and of the location at which the request and materials can be inspected is published within the relevant jurisdiction.

(e) Upon receipt of a request for certification, the Assistant Attorney General may request further information that he or she considers relevant to the determinations required to be made under this subpart.

(Approved by the Office of Management and Budget under control number 1190–0005)

[56 FR 35592, July 26, 1991, as amended by Order No. 1679–93, 58 FR 17522, Apr. 5, 1993]

§ 36.604 Preliminary determination.

After consultation with the Architectural and Transportation Barriers Compliance Board, the Assistant Attorney General shall make a preliminary determination of equivalency or a preliminary determination to deny certification.

§ 36.605 Procedure following preliminary determination of equivalency.

(a) If the Assistant Attorney General makes a preliminary determination of equivalency under § 36.604, he or she shall inform the submitting official, in writing, of that preliminary determination. The Assistant Attorney General shall also—

(1) Publish a notice in the FEDERAL REGISTER that advises the public of the preliminary determination of equivalency with respect to the particular

code, and invite interested persons and organizations, including individuals with disabilities, during a period of at least 60 days following publication of the notice, to file written comments relevant to whether a final certification of equivalency should be issued;

(2) After considering the information received in response to the notice described in paragraph (a) of this section, and after publishing a separate notice in the FEDERAL REGISTER, hold an informal hearing in Washington, DC at which interested persons, including individuals with disabilities, are provided an opportunity to express their views with respect to the preliminary determination of equivalency; and

(b) The Assistant Attorney General, after consultation with the Architectural and Transportation Barriers Compliance Board, and consideration of the materials and information submitted pursuant to this section and § 36.603, shall issue either a certification of equivalency or a final determination to deny the request for certification. He or she shall publish notice of the certification of equivalency or denial of certification in the FEDERAL REGISTER.

§ 36.606 Procedure following preliminary denial of certification.

(a) If the Assistant Attorney General makes a Preliminary determination to deny certification of a code under § 36.604, he or she shall notify the submitting official of the determination. The notification may include specification of the manner in which the code could be amended in order to qualify for certification.

(b) The Assistant Attorney General shall allow the submitting official not less than 15 days to submit data, views, and arguments in opposition to the preliminary determination to deny certification. If the submitting official does not submit materials, the Assistant Attorney General shall not be required to take any further action. If the submitting official submits materials, the Assistant Attorney General shall evaluate those materials and any other relevant information. After evaluation of any newly submitted materials, the Assistant Attorney General shall make either a final denial of certification or a preliminary determination of equivalency.

§ 36.607 Effect of certification.

(a)(1) A certification shall be considered a certification of equivalency only with respect to those features or elements that are both covered by the certified code and addressed by the standards against which equivalency is measured.

(2) For example, if certain equipment is not covered by the code, the determination of equivalency cannot be used as evidence with respect to the question of whether equipment in a building built according to the code satisfies the Act's requirements with respect to such equipment. By the same token, certification would not be relevant to construction of a facility for children, if the regulations against which equivalency is measured do not address children's facilities.

(b) A certification of equivalency is effective only with respect to the particular edition of the code for which certification is granted. Any amendments or other changes to the code after the date of the certified edition are not considered part of the certification.

(c) A submitting official may reapply for certification of amendments or other changes to a code that has already received certification.

§ 36.608 Guidance concerning model codes.

Upon application by an authorized representative of a private entity responsible for developing a model code, the Assistant Attorney General may review the relevant model code and issue guidance concerning whether and in what respects the model code is consistent with the minimum requirements of the Act for the accessibility and usability of places of public accommodation and commercial facilities under this part.

ADA ACCESSIBILITY GUIDELINES FOR BUILDINGS AND FACILITIES TABLE OF CONTENTS

1. PURPOSE **1**

2. GENERAL **1**

2.1 Provisions for Adults 1
2.2 Equivalent Facilitation 1

3. MISCELLANEOUS INSTRUCTIONS AND DEFINITIONS **1**

3.1 Graphic Conventions 1
3.2 Dimensional Tolerances 2
3.3 Notes 2
3.4 General Terminology 2
3.5 Definitions 2

4. ACCESSIBLE ELEMENTS AND SPACES: SCOPE AND TECHNICAL REQUIREMENTS **5**

4.1 Minimum Requirements 5

4.1.1. Application 5
4.1.2. Accessible Sites and Exterior Facilities: New Construction 5
4.1.3. Accessible Buildings: New Construction 7
4.1.4. (Reserved) 10
4.1.5. Accessible Buildings: Additions 10
4.1.6. Accessible Buildings: Alterations 11
4.1.7. Accessible Buildings: Historic Preservation 13

4.2 Space Allowance and Reach Ranges 14
4.3 Accessible Route 15
4.4 Protruding Objects 21
4.5 Ground and Floor Surfaces 22
4.6 Parking and Passenger Loading Zones 24
4.7 Curb Ramps 26
4.8 Ramps 27
4.9 Stairs 30
4.10 Elevators 30

4.11 Platform Lifts (Wheelchair Lifts) 36
4.12 Windows 36
4.13 Doors 36
4.14 Entrances 40
4.15 Drinking Fountains and Water Coolers 40
4.16 Water Closets 40
4.17 Toilet Stalls 41
4.18 Urinals 44
4.19 Lavatories and Mirrors 44
4.20 Bathtubs 45
4.21 Shower Stalls 45
4.22 Toilet Rooms 45
4.23 Bathrooms, Bathing Facilities, and Shower Rooms 48
4.24 Sinks 49
4.25 Storage 49
4.26 Handrails, Grab Bars, and Tub and Shower Seats 50
4.27 Controls and Operating Mechanisms 51
4.28 Alarms 52
4.29 Detectable Warnings 53
4.30 Signage 53
4.31 Telephones 54
4.32 Fixed or Built-in Seating and Tables 56
4.33 Assembly Areas 56
4.34 Automated Teller Machines 58
4.35 Dressing and Fitting Rooms 58

5. RESTAURANTS AND CAFETERIAS. 59

6. MEDICAL CARE FACILITIES 60

7. BUSINESS AND MERCANTILE 61

8. LIBRARIES 62

9. ACCESSIBLE TRANSIENT LODGING 63

10. TRANSPORTATION FACILITIES 67

APPENDIX A1

1. PURPOSE.

This document sets guidelines for accessibility to places of public accommodation and commercial facilities by individuals with disabilities. These guidelines are to be applied during the design, construction, and alteration of such buildings and facilities to the extent required by regulations issued by Federal agencies, including the Department of Justice, under the Americans with Disabilities Act of 1990.

The technical specifications 4.2 through 4.35, of these guidelines are the same as those of the American National Standard Institute's document A117.1-1980, except as noted in this text by italics. However, sections 4.1.1 through 4.1.7 and sections 5 through 10 are different from ANSI A117.1 in their entirety and are printed in standard type.

The illustrations and text of ANSI A117.1 are reproduced with permission from the American National Standards Institute. Copies of the standard may be purchased from the American National Standards Institute at 1430 Broadway, New York, New York 10018.

2. GENERAL.

2.1 Provisions for Adults. *The specifications in these guidelines are based upon adult dimensions and anthropometrics.*

2.2* Equivalent Facilitation. *Departures from particular technical and scoping requirements of this guideline by the use of other designs and technologies are permitted where the alternative designs and technologies used will provide substantially equivalent or greater access to and usability of the facility.*

3. MISCELLANEOUS INSTRUCTIONS AND DEFINITIONS.

3.1 Graphic Conventions. Graphic conventions are shown in Table 1. Dimensions that are not marked minimum or maximum are absolute, unless otherwise indicated in the text or captions.

Table 1
Graphic Conventions

Convention	Description
36 / 915	Typical dimension line showing U.S. customary units (in inches) above the line and SI units (in millimeters) below
9 / 230	Dimensions for short distances indicated on extended line
9 / 230 36 / 915	Dimension line showing alternate dimensions required
⇦	Direction of approach
max	Maximum
min	Minimum
.....	Boundary of clear floor area
— — — ℄	Centerline

1

3.4 General Terminology

3.2 Dimensional Tolerances. All dimensions are subject to conventional building industry tolerances for field conditions.

3.3 Notes. The text of *these guidelines* does not contain notes or footnotes. Additional information, explanations, and advisory materials are located in the Appendix. Paragraphs marked with an asterisk have related, non-mandatory material in the Appendix. In the Appendix, the corresponding paragraph numbers are preceded by an A.

3.4 General Terminology.

comply with. Meet one or more specifications of *these guidelines*.

if, if ... then. Denotes a specification that applies only when the conditions described are present.

may. Denotes an option or alternative.

shall. Denotes a mandatory specification or requirement.

should. Denotes an advisory specification or recommendation.

3.5 Definitions.

Access Aisle. An accessible pedestrian space between elements, such as parking spaces, seating, and desks, that provides clearances appropriate for use of the elements.

Accessible. Describes a site, building, facility, or portion thereof that complies with *these guidelines*.

Accessible Element. An *element* specified by *these guidelines* (for example, telephone, controls, and the like).

Accessible Route. A continuous unobstructed path connecting all accessible elements and spaces of a building or facility. Interior accessible routes may include corridors, floors, ramps, elevators, lifts, and clear floor space at fixtures. Exterior accessible routes may include parking access aisles, curb ramps, *crosswalks at vehicular ways*, walks, ramps, and lifts.

Accessible Space. *Space that complies with these guidelines.*

Adaptability. The ability of certain building spaces and elements, such as kitchen counters, sinks, and grab bars, to be added or altered so as to accommodate the needs of *individuals with or without disabilities* or to accommodate the needs of persons with different types or degrees of disability.

Addition. *An expansion, extension, or increase in the gross floor area of a building or facility.*

Administrative Authority. A governmental agency that adopts or enforces regulations and *guidelines* for the design, construction, or *alteration* of buildings and facilities.

Alteration. *An alteration is a change to a building or facility made by, on behalf of, or for the use of a public accommodation or commercial facility, that affects or could affect the usability of the building or facility or part thereof. Alterations include, but are not limited to, remodeling, renovation, rehabilitation, reconstruction, historic restoration, changes or rearrangement of the structural parts or elements, and changes or rearrangement in the plan configuration of walls and full-height partitions. Normal maintenance, reroofing, painting or wallpapering, or changes to mechanical and electrical systems are not alterations unless they affect the usability of the building or facility.*

Area of Rescue Assistance. *An area, which has direct access to an exit, where people who are unable to use stairs may remain temporarily in safety to await further instructions or assistance during emergency evacuation.*

Assembly Area. A room or space accommodating a *group of* individuals for recreational, educational, political, social, or amusement purposes, or for the consumption of food and drink.

Automatic Door. A door equipped with a power-operated mechanism and controls that open and close the door automatically upon receipt of a momentary actuating signal. The switch that begins the automatic cycle may be a photoelectric device, floor mat, or manual switch (see power-assisted door).

3.5 Definitions

Building. Any structure used and intended for supporting or sheltering any use or occupancy.

Circulation Path. An exterior or interior way of passage from one place to another for pedestrians, including, but not limited to, walks, hallways, courtyards, stairways, and stair landings.

Clear. Unobstructed.

Clear Floor Space. *The minimum unobstructed floor or ground space required to accommodate a single, stationary wheelchair and occupant.*

Closed Circuit Telephone. *A telephone with dedicated line(s) such as a house phone, courtesy phone or phone that must be used to gain entrance to a facility.*

Common Use. Refers to those interior and exterior rooms, spaces, or elements that are made available for the use of a restricted group of people (for example, *occupants of a homeless shelter*, the occupants of an office building, or the guests of such occupants).

Cross Slope. The slope that is perpendicular to the direction of travel (see running slope).

Curb Ramp. A short ramp cutting through a curb or built up to it.

Detectable Warning. *A standardized surface feature built in or applied to walking surfaces or other elements to warn visually impaired people of hazards on a circulation path.*

Dwelling Unit. A single unit which provides a kitchen or food preparation area, in addition to rooms and spaces for living, bathing, sleeping, and the like. *Dwelling units include a single family home or a townhouse used as a transient group home; an apartment building used as a shelter; guestrooms in a hotel that provide sleeping accommodations and food preparation areas; and other similar facilities used on a transient basis. For purposes of these guidelines, use of the term "Dwelling Unit" does not imply the unit is used as a residence.*

Egress, Means of. *A continuous and unobstructed way of exit travel from any point in a building or facility to a public way. A means of egress comprises vertical and horizontal travel and may include intervening room spaces, doorways, hallways, corridors, passageways, balconies, ramps, stairs, enclosures, lobbies, horizontal exits, courts and yards. An accessible means of egress is one that complies with these guidelines and does not include stairs, steps, or escalators. Areas of rescue assistance or evacuation elevators may be included as part of accessible means of egress.*

Element. *An architectural or mechanical component of a building, facility, space, or site, e.g., telephone, curb ramp, door, drinking fountain, seating, or water closet.*

Entrance. *Any access point to a building or portion of a building or facility used for the purpose of entering. An entrance includes the approach walk, the vertical access leading to the entrance platform, the entrance platform itself, vestibules if provided, the entry door(s) or gate(s), and the hardware of the entry door(s) or gate(s).*

Facility. *All or any portion of buildings, structures, site improvements, complexes, equipment, roads, walks, passageways, parking lots, or other real or personal property located on a site.*

Ground Floor. *Any occupiable floor less than one story above or below grade with direct access to grade. A building or facility always has at least one ground floor and may have more than one ground floor as where a split level entrance has been provided or where a building is built into a hillside.*

Mezzanine or Mezzanine Floor. *That portion of a story which is an intermediate floor level placed within the story and having occupiable space above and below its floor.*

Marked Crossing. A crosswalk or other identified path intended for pedestrian use in crossing a vehicular way.

Multifamily Dwelling. Any building containing more than two dwelling units.

Occupiable. *A room or enclosed space designed for human occupancy in which individuals congregate for amusement, educational or similar purposes, or in which occupants are engaged at labor, and which is equipped with means of egress, light, and ventilation.*

3.5 Definitions

Operable Part. A part of a piece of equipment or appliance used to insert or withdraw objects, or to activate, deactivate, or adjust the equipment or appliance (for example, coin slot, pushbutton, handle).

Path of Travel. *(Reserved).*

Power-assisted Door. A door used *for human passage* with a mechanism that helps to open the door, or relieves the opening resistance of a door, upon the activation of a switch or a continued force applied to the door itself.

Public Use. Describes interior or exterior rooms or spaces that are made available to the general public. Public use may be provided at a building or facility that is privately or publicly owned.

Ramp. A walking surface which has a running slope greater than 1:20.

Running Slope. The slope that is parallel to the direction of travel (see cross slope).

Service Entrance. An entrance intended primarily for delivery of goods or services.

Signage. *Displayed* verbal, symbolic, *tactile,* and pictorial information.

Site. A parcel of land bounded by a property line or a designated portion of a public right-of-way.

Site Improvement. Landscaping, paving for pedestrian and vehicular ways, outdoor lighting, recreational facilities, and the like, added to a site.

Sleeping Accommodations. Rooms in which people sleep; for example, dormitory and hotel or motel guest rooms or suites.

Space. *A definable area, e.g., room, toilet room, hall, assembly area, entrance, storage room, alcove, courtyard, or lobby.*

Story. *That portion of a building included between the upper surface of a floor and upper surface of the floor or roof next above. If such portion of a building does not include occupiable space, it is not considered a story for purposes of these guidelines. There may be more than one floor level within a story as in the case of a mezzanine or mezzanines.*

Structural Frame. The structural frame shall be considered to be the columns and the girders, beams, trusses and spandrels having direct connections to the columns and all other members which are essential to the stability of the building as a whole.

Tactile. Describes an object that can be perceived using the sense of touch.

Text Telephone. *Machinery or equipment that employs interactive graphic (i.e., typed) communications through the transmission of coded signals across the standard telephone network. Text telephones can include, for example, devices known as TDD's (telecommunication display devices or telecommunication devices for deaf persons) or computers.*

Transient Lodging. *A building, facility, or portion thereof, excluding inpatient medical care facilities, that contains one or more dwelling units or sleeping accommodations. Transient lodging may include, but is not limited to, resorts, group homes, hotels, motels, and dormitories.*

Vehicular Way. A route intended for vehicular traffic, such as a street, driveway, or parking lot.

Walk. An exterior pathway with a prepared surface intended for pedestrian use, including general pedestrian areas such as plazas and courts.

NOTE: Sections 4.1.1 through 4.1.7 are different from ANSI A117.1 in their entirety and are printed in standard type (ANSI A117.1 does not include scoping provisions).

4. ACCESSIBLE ELEMENTS AND SPACES: SCOPE AND TECHNICAL REQUIREMENTS.

4.1 Minimum Requirements

4.1.1* Application.

(1) General. All areas of newly designed or newly constructed buildings and facilities required to be accessible by 4.1.2 and 4.1.3 and altered portions of existing buildings and facilities required to be accessible by 4.1.6 shall comply with these guidelines, 4.1 through 4.35, unless otherwise provided in this section or as modified in a special application section.

(2) Application Based on Building Use. Special application sections 5 through 10 provide additional requirements for restaurants and cafeterias, medical care facilities, business and mercantile, libraries, accessible transient lodging, and transportation facilities. When a building or facility contains more than one use covered by a special application section, each portion shall comply with the requirements for that use.

(3)* Areas Used Only by Employees as Work Areas. Areas that are used only as work areas shall be designed and constructed so that individuals with disabilities can approach, enter, and exit the areas. These guidelines do not require that any areas used only as work areas be constructed to permit maneuvering within the work area or be constructed or equipped (i.e., with racks or shelves) to be accessible.

(4) Temporary Structures. These guidelines cover temporary buildings or facilities as well as permanent facilities. Temporary buildings and facilities are not of permanent construction but are extensively used or are essential for public use for a period of time. Examples of temporary buildings or facilities covered by these guidelines include, but are not limited to: reviewing stands, temporary classrooms, bleacher areas, exhibit areas, temporary banking facilities, temporary health screening services, or temporary safe pedestrian passageways around a construction site. Structures, sites and equipment directly associated with the actual processes of construction, such as scaffolding, bridging, materials hoists, or construction trailers are not included.

(5) General Exceptions.

(a) In new construction, a person or entity is not required to meet fully the requirements of these guidelines where that person or entity can demonstrate that it is structurally impracticable to do so. Full compliance will be considered structurally impracticable only in those rare circumstances when the unique characteristics of terrain prevent the incorporation of accessibility features. If full compliance with the requirements of these guidelines is structurally impracticable, a person or entity shall comply with the requirements to the extent it is not structurally impracticable. Any portion of the building or facility which can be made accessible shall comply to the extent that it is not structurally impracticable.

(b) Accessibility is not required to (i) observation galleries used primarily for security purposes; or (ii) in non-occupiable spaces accessed only by ladders, catwalks, crawl spaces, very narrow passageways, or freight (non-passenger) elevators, and frequented only by service personnel for repair purposes; such spaces include, but are not limited to, elevator pits, elevator penthouses, piping or equipment catwalks.

4.1.2 Accessible Sites and Exterior Facilities: New Construction. An accessible site shall meet the following minimum requirements:

(1) At least one accessible route complying with 4.3 shall be provided within the boundary of the site from public transportation stops, accessible parking spaces, passenger loading zones if provided, and public streets or sidewalks, to an accessible building entrance.

(2) At least one accessible route complying with 4.3 shall connect accessible buildings, accessible facilities, accessible elements, and accessible spaces that are on the same site.

(3) All objects that protrude from surfaces or posts into circulation paths shall comply with 4.4.

4.1.2 Accessible Sites and Exterior Facilities: New Construction

(4) Ground surfaces along accessible routes and in accessible spaces shall comply with 4.5.

(5) (a) If parking spaces are provided for self-parking by employees or visitors, or both, then accessible spaces complying with 4.6 shall be provided in each such parking area in conformance with the table below. Spaces required by the table need not be provided in the particular lot. They may be provided in a different location if equivalent or greater accessibility, in terms of distance from an accessible entrance, cost and convenience is ensured.

Total Parking in Lot	Required Minimum Number of Accessible Spaces
1 to 25	1
26 to 50	2
51 to 75	3
76 to 100	4
101 to 150	5
151 to 200	6
201 to 300	7
301 to 400	8
401 to 500	9
501 to 1000	2 percent of total
1001 and over	20 plus 1 for each 100 over 1000

Except as provided in (b), access aisles adjacent to accessible spaces shall be 60 in (1525 mm) wide minimum.

(b) One in every eight accessible spaces, but not less than one, shall be served by an access aisle 96 in (2440 mm) wide minimum and shall be designated "van accessible" as required by 4.6.4. The vertical clearance at such spaces shall comply with 4.6.5. All such spaces may be grouped on one level of a parking structure.

EXCEPTION: Provision of all required parking spaces in conformance with "Universal Parking Design" (see appendix A4.6.3) is permitted.

(c) If passenger loading zones are provided, then at least one passenger loading zone shall comply with 4.6.6.

(d) At facilities providing medical care and other services for persons with mobility impairments, parking spaces complying with 4.6 shall be provided in accordance with 4.1.2(5)(a) except as follows:

(i) Outpatient units and facilities: 10 percent of the total number of parking spaces provided serving each such outpatient unit or facility;

(ii) Units and facilities that specialize in treatment or services for persons with mobility impairments: 20 percent of the total number of parking spaces provided serving each such unit or facility.

(e)*Valet parking: Valet parking facilities shall provide a passenger loading zone complying with 4.6.6 located on an accessible route to the entrance of the facility. Paragraphs 5(a), 5(b), and 5(d) of this section do not apply to valet parking facilities.

(6) If toilet facilities are provided on a site, then each such public or common use toilet facility shall comply with 4.22. If bathing facilities are provided on a site, then each such public or common use bathing facility shall comply with 4.23.

For single user portable toilet or bathing units clustered at a single location, at least 5% but no less than one toilet unit or bathing unit complying with 4.22 or 4.23 shall be installed at each cluster whenever typical inaccessible units are provided. Accessible units shall be identified by the International Symbol of Accessibility.

EXCEPTION: Portable toilet units at construction sites used exclusively by construction personnel are not required to comply with 4.1.2(6).

(7) Building Signage. Signs which designate permanent rooms and spaces shall comply with 4.30.1, 4.30.4, 4.30.5 and 4.30.6. Other signs which provide direction to, or information about, functional spaces of the building shall comply with 4.30.1, 4.30.2, 4.30.3, and 4.30.5. Elements and spaces of accessible facilities which shall be identified by the International Symbol of Accessibility and which shall comply with 4.30.7 are:

(a) Parking spaces designated as reserved for individuals with disabilities;

(b) Accessible passenger loading zones;

(c) Accessible entrances when not all are accessible (inaccessible entrances shall have directional signage to indicate the route to the nearest accessible entrance);

(d) Accessible toilet and bathing facilities when not all are accessible.

4.1.3 Accessible Buildings: New Construction. Accessible buildings and facilities shall meet the following minimum requirements:

(1) At least one accessible route complying with 4.3 shall connect accessible building or facility entrances with all accessible spaces and elements within the building or facility.

(2) All objects that overhang or protrude into circulation paths shall comply with 4.4.

(3) Ground and floor surfaces along accessible routes and in accessible rooms and spaces shall comply with 4.5.

(4) Interior and exterior stairs connecting levels that are not connected by an elevator, ramp, or other accessible means of vertical access shall comply with 4.9.

(5)* One passenger elevator complying with 4.10 shall serve each level, including mezzanines, in all multi-story buildings and facilities unless exempted below. If more than one elevator is provided, each full passenger elevator shall comply with 4.10.

EXCEPTION 1: Elevators are not required in facilities that are less than three stories or that have less than 3000 square feet per story unless the building is a shopping center, a shopping mall, or the professional office of a health care provider, or another type of facility as determined by the Attorney General. The elevator exemption set forth in this paragraph does not obviate or limit in any way the obligation to comply with the other accessibility requirements established in section 4.1.3. For example, floors above or below the accessible ground floor must meet the requirements of this section except for elevator service. If toilet or bathing facilities are provided on a level not served by an elevator, then toilet or bathing facilities must be provided on the accessible ground floor. In new construction if a building or facility is eligible for this exemption but a full passenger elevator is nonetheless planned, that elevator shall meet the requirements of 4.10 and shall serve each level in the building. A full passenger elevator that provides service from a garage to only one level of a building or facility is not required to serve other levels.

EXCEPTION 2: Elevator pits, elevator penthouses, mechanical rooms, piping or equipment catwalks are exempted from this requirement.

EXCEPTION 3: Accessible ramps complying with 4.8 may be used in lieu of an elevator.

EXCEPTION 4: Platform lifts (wheelchair lifts) complying with 4.11 of this guideline and applicable state or local codes may be used in lieu of an elevator only under the following conditions:

(a) To provide an accessible route to a performing area in an assembly occupancy.

(b) To comply with the wheelchair viewing position line-of-sight and dispersion requirements of 4.33.3.

(c) To provide access to incidental occupiable spaces and rooms which are not open to the general public and which house no more than five persons, including but not limited to equipment control rooms and projection booths.

(d) To provide access where existing site constraints or other constraints make use of a ramp or an elevator infeasible.

(6) Windows: (Reserved).

(7) Doors:

(a) At each accessible entrance to a building or facility, at least one door shall comply with 4.13.

(b) Within a building or facility, at least one door at each accessible space shall comply with 4.13.

(c) Each door that is an element of an accessible route shall comply with 4.13.

4.1.3 Accessible Buildings: New Construction

(d) Each door required by 4.3.10, Egress, shall comply with 4.13.

(8) In new construction, at a minimum, the requirements in (a) and (b) below shall be satisfied independently:

(a)(i) At least 50% of all public entrances (excluding those in (b) below) must be accessible. At least one must be a ground floor entrance. Public entrances are any entrances that are not loading or service entrances.

(ii) Accessible entrances must be provided in a number at least equivalent to the number of exits required by the applicable building/fire codes. (This paragraph does not require an increase in the total number of entrances planned for a facility.)

(iii) An accessible entrance must be provided to each tenancy in a facility (for example, individual stores in a strip shopping center).

One entrance may be considered as meeting more than one of the requirements in (a). Where feasible, accessible entrances shall be the entrances used by the majority of people visiting or working in the building.

(b)(i) In addition, if direct access is provided for pedestrians from an enclosed parking garage to the building, at least one direct entrance from the garage to the building must be accessible.

(ii) If access is provided for pedestrians from a pedestrian tunnel or elevated walkway, one entrance to the building from each tunnel or walkway must be accessible.

One entrance may be considered as meeting more than one of the requirements in (b).

Because entrances also serve as emergency exits whose proximity to all parts of buildings and facilities is essential, it is preferable that all entrances be accessible.

(c) If the only entrance to a building, or tenancy in a facility, is a service entrance, that entrance shall be accessible.

(d) Entrances which are not accessible shall have directional signage complying with 4.30.1, 4.30.2, 4.30.3, and 4.30.5, which indicates the location of the nearest accessible entrance.

(9)* In buildings or facilities, or portions of buildings or facilities, required to be accessible, accessible means of egress shall be provided in the same number as required for exits by local building/life safety regulations. Where a required exit from an occupiable level above or below a level of accessible exit discharge is not accessible, an area of rescue assistance shall be provided on each such level (in a number equal to that of inaccessible required exits). Areas of rescue assistance shall comply with 4.3.11. A horizontal exit, meeting the requirements of local building/life safety regulations, shall satisfy the requirement for an area of rescue assistance.

EXCEPTION: Areas of rescue assistance are not required in buildings or facilities having a supervised automatic sprinkler system.

(10)* Drinking Fountains:

(a) Where only one drinking fountain is provided on a floor there shall be a drinking fountain which is accessible to individuals who use wheelchairs in accordance with 4.15 and one accessible to those who have difficulty bending or stooping. (This can be accommodated by the use of a "hi-lo" fountain; by providing one fountain accessible to those who use wheelchairs and one fountain at a standard height convenient for those who have difficulty bending; by providing a fountain accessible under 4.15 and a water cooler; or by such other means as would achieve the required accessibility for each group on each floor.)

(b) Where more than one drinking fountain or water cooler is provided on a floor, 50% of those provided shall comply with 4.15 and shall be on an accessible route.

(11) Toilet Facilities: If toilet rooms are provided, then each public and common use toilet room shall comply with 4.22. Other toilet rooms provided for the use of occupants of specific spaces (i.e., a private toilet room for the occupant of a private office) shall be adaptable. If bathing rooms are provided, then each public and common use bathroom shall comply with 4.23. Accessible toilet rooms and bathing facilities shall be on an accessible route.

4.1.3 Accessible Buildings: New Construction

(12) Storage, Shelving and Display Units:

(a) If fixed or built-in storage facilities such as cabinets, shelves, closets, and drawers are provided in accessible spaces, at least one of each type provided shall contain storage space complying with 4.25. Additional storage may be provided outside of the dimensions required by 4.25.

(b) Shelves or display units allowing self-service by customers in mercantile occupancies shall be located on an accessible route complying with 4.3. Requirements for accessible reach range do not apply.

(13) Controls and operating mechanisms in accessible spaces, along accessible routes, or as parts of accessible elements (for example, light switches and dispenser controls) shall comply with 4.27.

(14) If emergency warning systems are provided, then they shall include both audible alarms and visual alarms complying with 4.28. Sleeping accommodations required to comply with 9.3 shall have an alarm system complying with 4.28. Emergency warning systems in medical care facilities may be modified to suit standard health care alarm design practice.

(15) Detectable warnings shall be provided at locations as specified in 4.29.

(16) Building Signage:

(a) Signs which designate permanent rooms and spaces shall comply with 4.30.1, 4.30.4, 4.30.5 and 4.30.6.

(b) Other signs which provide direction to or information about functional spaces of the building shall comply with 4.30.1, 4.30.2, 4.30.3, and 4.30.5.

EXCEPTION: Building directories, menus, and all other signs which are temporary are not required to comply.

(17) Public Telephones:

(a) If public pay telephones, public closed circuit telephones, or other public telephones are provided, then they shall comply with 4.31.2 through 4.31.8 to the extent required by the following table:

Number of each type of telephone provided on each floor	Number of telephones required to comply with 4.31.2 through 4.31.8[1]
1 or more single unit	1 per floor
1 bank[2]	1 per floor
2 or more banks[2]	1 per bank. Accessible unit may be installed as a single unit in proximity (either visible or with signage) to the bank. At least one public telephone per floor shall meet the requirements for a forward reach telephone[3].

[1] Additional public telephones may be installed at any height. Unless otherwise specified, accessible telephones may be either forward or side reach telephones.

[2] A bank consists of two or more adjacent public telephones, often installed as a unit.

[3] EXCEPTION: For exterior installations only, if dial tone first service is available, then a side reach telephone may be installed instead of the required forward reach telephone (i.e., one telephone in proximity to each bank shall comply with 4.31).

(b)* All telephones required to be accessible and complying with 4.31.2 through 4.31.8 shall be equipped with a volume control. In addition, 25 percent, but never less than one, of all other public telephones provided shall be equipped with a volume control and shall be dispersed among all types of public telephones, including closed circuit telephones, throughout the building or facility. Signage complying with applicable provisions of 4.30.7 shall be provided.

(c) The following shall be provided in accordance with 4.31.9:

(i) if a total number of four or more public pay telephones (including both interior and exterior phones) is provided at a site, and at least one is in an interior location, then at least one interior public text telephone shall be provided.

(ii) if an interior public pay telephone is provided in a stadium or arena, in a convention center, in a hotel with a convention center, or

4.1.3 Accessible Buildings: New Construction

in a covered mall, at least one interior public text telephone shall be provided in the facility.

(iii) if a public pay telephone is located in or adjacent to a hospital emergency room, hospital recovery room, or hospital waiting room, one public text telephone shall be provided at each such location.

(d) Where a bank of telephones in the interior of a building consists of three or more public pay telephones, at least one public pay telephone in each such bank shall be equipped with a shelf and outlet in compliance with 4.31.9(2).

(18) If fixed or built-in seating or tables (including, but not limited to, study carrels and student laboratory stations), are provided in accessible public or common use areas, at least five percent (5%), but not less than one, of the fixed or built-in seating areas or tables shall comply with 4.32. An accessible route shall lead to and through such fixed or built-in seating areas, or tables.

(19)* Assembly areas:

(a) in places of assembly with fixed seating accessible wheelchair locations shall comply with 4.33.2, 4.33.3, and 4.33.4 and shall be provided consistent with the following table:

Capacity of Seating in Assembly Areas	Number of Required Wheelchair Locations
4 to 25	1
26 to 50	2
51 to 300	4
301 to 500	6
over 500	6, plus 1 additional space for each total seating capacity increase of 100

In addition, one percent, but not less than one, of all fixed seats shall be aisle seats with no armrests on the aisle side, or removable or folding armrests on the aisle side. Each such seat shall be identified by a sign or marker. Signage notifying patrons of the availability of such seats shall be posted at the ticket office. Aisle seats are not required to comply with 4.33.4.

(b) This paragraph applies to assembly areas where audible communications are integral to the use of the space (e.g., concert and lecture halls, playhouses and movie theaters, meeting rooms, etc.). Such assembly areas, if (1) they accommodate at least 50 persons, or if they have audio-amplification systems, and (2) they have fixed seating, shall have a permanently installed assistive listening system complying with 4.33. For other assembly areas, a permanently installed assistive listening system, or an adequate number of electrical outlets or other supplementary wiring necessary to support a portable assistive listening system shall be provided. The minimum number of receivers to be provided shall be equal to 4 percent of the total number of seats, but in no case less than two. Signage complying with applicable provisions of 4.30 shall be installed to notify patrons of the availability of a listening system.

(20) Where automated teller machines are provided, each machine shall comply with the requirements of 4.34 except where two or more machines are provided at a location, then only one must comply.

EXCEPTION: Drive-up-only automated teller machines are not required to comply with 4.34.2 and 4.34.3.

(21) Where dressing and fitting rooms are provided for use by the general public, patients, customers or employees, 5 percent, but never less than one, of dressing rooms for each type of use in each cluster of dressing rooms shall be accessible and shall comply with 4.35.

Examples of types of dressing rooms are those serving different genders or distinct and different functions as in different treatment or examination facilities.

4.1.4 (Reserved).

4.1.5 Accessible Buildings: Additions. Each addition to an existing building or facility shall be regarded as an alteration. Each space or element added to the existing building or facility shall comply with the applicable provisions of 4.1.1 to 4.1.3, Minimum Requirements (for New Construction) and the applicable technical specifications of 4.2 through 4.35 and sections 5 through 10. Each addition that

affects or could affect the usability of an area containing a primary function shall comply with 4.1.6(2).

4.1.6 Accessible Buildings: Alterations.

(1) General. Alterations to existing buildings and facilities shall comply with the following:

(a) No alteration shall be undertaken which decreases or has the effect of decreasing accessibility or usability of a building or facility below the requirements for new construction at the time of alteration.

(b) If existing elements, spaces, or common areas are altered, then each such altered element, space, feature, or area shall comply with the applicable provisions of 4.1.1 to 4.1.3 Minimum Requirements (for New Construction). If the applicable provision for new construction requires that an element, space, or common area be on an accessible route, the altered element, space, or common area is not required to be on an accessible route except as provided in 4.1.6(2) (Alterations to an Area Containing a Primary Function.)

(c) If alterations of single elements, when considered together, amount to an alteration of a room or space in a building or facility, the entire space shall be made accessible.

(d) No alteration of an existing element, space, or area of a building or facility shall impose a requirement for greater accessibility than that which would be required for new construction. For example, if the elevators and stairs in a building are being altered and the elevators are, in turn, being made accessible, then no accessibility modifications are required to the stairs connecting levels connected by the elevator. If stair modifications to correct unsafe conditions are required by other codes, the modifications shall be done in compliance with these guidelines unless technically infeasible.

(e) At least one interior public text telephone complying with 4.31.9 shall be provided if:

(i) alterations to existing buildings or facilities with less than four exterior or interior public pay telephones would increase the total number to four or more telephones with at least one in an interior location; or

(ii) alterations to one or more exterior or interior public pay telephones occur in an existing building or facility with four or more public telephones with at least one in an interior location.

(f) If an escalator or stair is planned or installed where none existed previously and major structural modifications are necessary for such installation, then a means of accessible vertical access shall be provided that complies with the applicable provisions of 4.7, 4.8, 4.10, or 4.11.

(g) In alterations, the requirements of 4.1.3(9), 4.3.10 and 4.3.11 do not apply.

(h)*Entrances: If a planned alteration entails alterations to an entrance, and the building has an accessible entrance, the entrance being altered is not required to comply with 4.1.3(8), except to the extent required by 4.1.6(2). If a particular entrance is not made accessible, appropriate accessible signage indicating the location of the nearest accessible entrance(s) shall be installed at or near the inaccessible entrance, such that a person with disabilities will not be required to retrace the approach route from the inaccessible entrance.

(i) If the alteration work is limited solely to the electrical, mechanical, or plumbing system, or to hazardous material abatement, or automatic sprinkler retrofitting, and does not involve the alteration of any elements or spaces required to be accessible under these guidelines, then 4.1.6(2) does not apply.

(j) EXCEPTION: In alteration work, if compliance with 4.1.6 is technically infeasible, the alteration shall provide accessibility to the maximum extent feasible. Any elements or features of the building or facility that are being altered and can be made accessible shall be made accessible within the scope of the alteration.

Technically Infeasible. Means, with respect to an alteration of a building or a facility, that it has little likelihood of being accomplished because existing structural conditions would require removing or altering a load-bearing member which is an essential part of the structural frame; or because other existing physical or site constraints prohibit modification or

4.1.6 Accessible Buildings: Alterations

addition of elements, spaces, or features which are in full and strict compliance with the minimum requirements for new construction and which are necessary to provide accessibility.

(k) EXCEPTION:

(i) These guidelines do not require the installation of an elevator in an altered facility that is less than three stories or has less than 3,000 square feet per story unless the building is a shopping center, a shopping mall, the professional office of a health care provider, or another type of facility as determined by the Attorney General.

(ii) The exemption provided in paragraph (i) does not obviate or limit in any way the obligation to comply with the other accessibility requirements established in these guidelines. For example, alterations to floors above or below the ground floor must be accessible regardless of whether the altered facility has an elevator. If a facility subject to the elevator exemption set forth in paragraph (i) nonetheless has a full passenger elevator, that elevator shall meet, to the maximum extent feasible, the accessibility requirements of these guidelines.

(2) Alterations to an Area Containing a Primary Function: In addition to the requirements of 4.1.6(1), an alteration that affects or could affect the usability of or access to an area containing a primary function shall be made so as to ensure that, to the maximum extent feasible, the path of travel to the altered area and the restrooms, telephones, and drinking fountains serving the altered area, are readily accessible to and usable by individuals with disabilities, unless such alterations are disproportionate to the overall alterations in terms of cost and scope (as determined under criteria established by the Attorney General).

(3) Special Technical Provisions for Alterations to Existing Buildings and Facilities:

(a) Ramps: Curb ramps and interior or exterior ramps to be constructed on sites or in existing buildings or facilities where space limitations prohibit the use of a 1:12 slope or less may have slopes and rises as follows:

(i) A slope between 1:10 and 1:12 is allowed for a maximum rise of 6 inches.

(ii) A slope between 1:8 and 1:10 is allowed for a maximum rise of 3 inches. A slope steeper than 1:8 is not allowed.

(b) Stairs: Full extension of handrails at stairs shall not be required in alterations where such extensions would be hazardous or impossible due to plan configuration.

(c) Elevators:

(i) If safety door edges are provided in existing automatic elevators, automatic door reopening devices may be omitted (see 4.10.6).

(ii) Where existing shaft configuration or technical infeasibility prohibits strict compliance with 4.10.9, the minimum car plan dimensions may be reduced by the minimum amount necessary, but in no case shall the inside car area be smaller than 48 in by 48 in.

(iii) Equivalent facilitation may be provided with an elevator car of different dimensions when usability can be demonstrated and when all other elements required to be accessible comply with the applicable provisions of 4.10. For example, an elevator of 47 in by 69 in (1195 mm by 1755 mm) with a door opening on the narrow dimension, could accommodate the standard wheelchair clearances shown in Figure 4.

(d) Doors:

(i) Where it is technically infeasible to comply with clear opening width requirements of 4.13.5, a projection of 5/8 in maximum will be permitted for the latch side stop.

(ii) If existing thresholds are 3/4 in high or less, and have (or are modified to have) a beveled edge on each side, they may remain.

(e) Toilet Rooms:

(i) Where it is technically infeasible to comply with 4.22 or 4.23, the installation of at least one unisex toilet/bathroom per floor, located in the same area as existing toilet facilities, will be permitted in lieu of modifying existing toilet facilities to be accessible. Each unisex toilet room shall contain one water closet complying with 4.16 and one lavatory complying with 4.19, and the door shall have a privacy latch.

(ii) Where it is technically infeasible to install a required standard stall (Fig. 30(a)), or where other codes prohibit reduction of the fixture count (i.e., removal of a water closet in order to create a double-wide stall), either alternate stall (Fig.30(b)) may be provided in lieu of the standard stall.

(iii) When existing toilet or bathing facilities are being altered and are not made accessible, signage complying with 4.30.1, 4.30.2, 4.30.3, 4.30.5, and 4.30.7 shall be provided indicating the location of the nearest accessible toilet or bathing facility within the facility.

(f) Assembly Areas:

(i) Where it is technically infeasible to disperse accessible seating throughout an altered assembly area, accessible seating areas may be clustered. Each accessible seating area shall have provisions for companion seating and shall be located on an accessible route that also serves as a means of emergency egress.

(ii) Where it is technically infeasible to alter all performing areas to be on an accessible route, at least one of each type of performing area shall be made accessible.

(g) Platform Lifts (Wheelchair Lifts): In alterations, platform lifts (wheelchair lifts) complying with 4.11 and applicable state or local codes may be used as part of an accessible route. The use of lifts is not limited to the four conditions in exception 4 of 4.1.3(5).

(h) Dressing Rooms: In alterations where technical infeasibility can be demonstrated, one dressing room for each sex on each level shall be made accessible. Where only unisex dressing rooms are provided, accessible unisex dressing rooms may be used to fulfill this requirement.

4.1.7 Accessible Buildings: Historic Preservation.

(1) Applicability:

(a) General Rule. Alterations to a qualified historic building or facility shall comply with 4.1.6 Accessible Buildings: Alterations, the applicable technical specifications of 4.2 through 4.35 and the applicable special application sections 5 through 10 unless it is determined in accordance with the procedures in 4.1.7(2) that compliance with the requirements for accessible routes (exterior and interior), ramps, entrances, or toilets would threaten or destroy the historic significance of the building or facility in which case the alternative requirements in 4.1.7(3) may be used for the feature.

EXCEPTION: (Reserved).

(b) Definition. A qualified historic building or facility is a building or facility that is:

(i) Listed in or eligible for listing in the National Register of Historic Places; or

(ii) Designated as historic under an appropriate State or local law.

(2) Procedures:

(a) Alterations to Qualified Historic Buildings and Facilities Subject to Section 106 of the National Historic Preservation Act:

(i) Section 106 Process. Section 106 of the National Historic Preservation Act (16 U.S.C. 470 f) requires that a Federal agency with jurisdiction over a Federal, federally assisted, or federally licensed undertaking consider the effects of the agency's undertaking on buildings and facilities listed in or eligible for listing in the National Register of Historic Places and give the Advisory Council on Historic Preservation a reasonable opportunity to comment on the undertaking prior to approval of the undertaking.

(ii) ADA Application. Where alterations are undertaken to a qualified historic building or facility that is subject to section 106 of the National Historic Preservation Act, the Federal agency with jurisdiction over the undertaking shall follow the section 106 process. If the State Historic Preservation Officer or Advisory Council on Historic Preservation agrees that compliance with the requirements for accessible routes (exterior and interior), ramps, entrances, or toilets would threaten or destroy the historic significance of the building or facility, the alternative requirements in 4.1.7(3) may be used for the feature.

4.2 Space Allowance and Reach Ranges

(b) Alterations to Qualified Historic Buildings and Facilities Not Subject to Section 106 of the National Historic Preservation Act. Where alterations are undertaken to a qualified historic building or facility that is not subject to section 106 of the National Historic Preservation Act, if the entity undertaking the alterations believes that compliance with the requirements for accessible routes (exterior and interior), ramps, entrances, or toilets would threaten or destroy the historic significance of the building or facility and that the alternative requirements in 4.1.7(3) should be used for the feature, the entity should consult with the State Historic Preservation Officer. If the State Historic Preservation Officer agrees that compliance with the accessibility requirements for accessible routes (exterior and interior), ramps, entrances or toilets would threaten or destroy the historical significance of the building or facility, the alternative requirements in 4.1.7(3) may be used.

(c) Consultation With Interested Persons. Interested persons should be invited to participate in the consultation process, including State or local accessibility officials, individuals with disabilities, and organizations representing individuals with disabilities.

(d) Certified Local Government Historic Preservation Programs. Where the State Historic Preservation Officer has delegated the consultation responsibility for purposes of this section to a local government historic preservation program that has been certified in accordance with section 101(c) of the National Historic Preservation Act of 1966 (16 U.S.C. 470a (c)) and implementing regulations (36 CFR 61.5), the responsibility may be carried out by the appropriate local government body or official.

(3) Historic Preservation: Minimum Requirements:

(a) At least one accessible route complying with 4.3 from a site access point to an accessible entrance shall be provided.

EXCEPTION: A ramp with a slope no greater than 1:6 for a run not to exceed 2 ft (610 mm) may be used as part of an accessible route to an entrance.

(b) At least one accessible entrance complying with 4.14 which is used by the public shall be provided.

EXCEPTION: If it is determined that no entrance used by the public can comply with 4.14, then access at any entrance not used by the general public but open (unlocked) with directional signage at the primary entrance may be used. The accessible entrance shall also have a notification system. Where security is a problem, remote monitoring may be used.

(c) If toilets are provided, then at least one toilet facility complying with 4.22 and 4.1.6 shall be provided along an accessible route that complies with 4.3. Such toilet facility may be unisex in design.

(d) Accessible routes from an accessible entrance to all publicly used spaces on at least the level of the accessible entrance shall be provided. Access shall be provided to all levels of a building or facility in compliance with 4.1 whenever practical.

(e) Displays and written information, documents, etc., should be located where they can be seen by a seated person. Exhibits and signage displayed horizontally (e.g., open books), should be no higher than 44 in (1120 mm) above the floor surface.

NOTE: The technical provisions of sections 4.2 through 4.35 are the same as those of the American National Standard Institute's document A117.1-1980, except as noted in the text.

4.2 Space Allowance and Reach Ranges.

4.2.1* Wheelchair Passage Width. The minimum clear width for single wheelchair passage shall be 32 in (815 mm) at a point and 36 in (915 mm) continuously (see Fig. 1 and 24(e)).

4.2.2 Width for Wheelchair Passing. The minimum width for two wheelchairs to pass is 60 in (1525 mm) (see Fig. 2).

4.2.3* Wheelchair Turning Space. The space required for a wheelchair to make a 180-degree turn is a clear space of 60 in (1525 mm)

4.2.4* Clear Floor or Ground Space for Wheelchairs

diameter (see Fig. 3(a)) or a T-shaped space (see Fig. 3(b)).

4.2.4* Clear Floor or Ground Space for Wheelchairs.

4.2.4.1 Size and Approach. The minimum clear floor or ground space required to accommodate a single, stationary wheelchair and occupant is 30 in by 48 in (760 mm by 1220 mm) (see Fig. 4(a)). The minimum clear floor or ground space for wheelchairs may be positioned for forward or parallel approach to an object (see Fig. 4(b) and (c)). Clear floor or ground space for wheelchairs may be part of the knee space required under some objects.

4.2.4.2 Relationship of Maneuvering Clearance to Wheelchair Spaces. One full unobstructed side of the clear floor or ground space for a wheelchair shall adjoin or overlap an accessible route or adjoin another wheelchair clear floor space. If a clear floor space is located in an alcove or otherwise confined on all or part of three sides, additional maneuvering clearances shall be provided as shown in Fig. 4(d) and (e).

4.2.4.3 Surfaces for Wheelchair Spaces. Clear floor or ground spaces for wheelchairs shall comply with 4.5.

4.2.5* Forward Reach. If the clear floor space only allows forward approach to an object, the maximum high forward reach allowed shall be 48 in (1220 mm) (see Fig. 5(a)). *The minimum low forward reach is 15 in (380 mm).* If the high forward reach is over an obstruction, reach and clearances shall be as shown in Fig. 5(b).

4.2.6* Side Reach. If the clear floor space allows parallel approach by a person in a wheelchair, the maximum high side reach allowed shall be 54 in (1370 mm) and the low side reach shall be no less than 9 in (230 mm) above the floor (Fig. 6(a) and (b)). If the side reach is over an obstruction, the reach and clearances shall be as shown in Fig 6(c).

4.3 Accessible Route.

4.3.1* General. All walks, halls, corridors, aisles, *skywalks, tunnels,* and other spaces

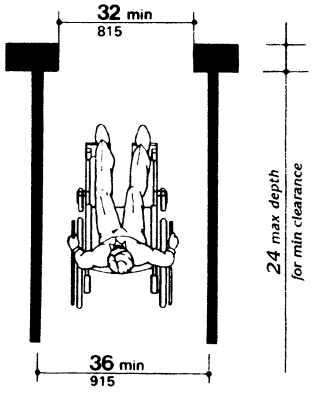

Fig. 1
Minimum Clear Width
for Single Wheelchair

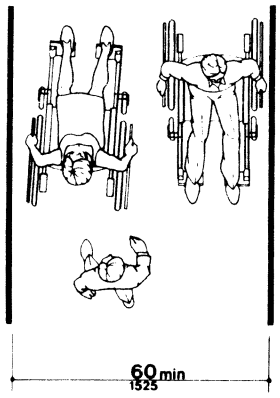

Fig. 2
Minimum Clear Width
for Two Wheelchairs

4.3 Accesssible Route

that are part of an accessible route shall comply with 4.3.

4.3.2 Location.

(1) At least one accessible route *within the boundary of the site* shall be provided from public transportation stops, accessible parking, and accessible passenger loading zones, and public streets or sidewalks to the accessible building entrance they serve. *The accessible route shall, to the maximum extent feasible, coincide with the route for the general public.*

(2) At least one accessible route shall connect accessible buildings, facilities, elements, and spaces that are on the same site.

(3) At least one accessible route shall connect accessible building or facility entrances with all accessible spaces and elements and with all accessible dwelling units within the building or facility.

(4) An accessible route shall connect at least one accessible entrance of each accessible dwelling unit with those exterior and interior spaces and facilities that serve the accessible dwelling unit.

4.3.3 Width. The minimum clear width of an accessible route shall be 36 in (915 mm) except at doors (see 4.13.5 and 4.13.6). If a person in a wheelchair must make a turn around an obstruction, the minimum clear width of the accessible route shall be as shown in Fig. 7(a) and (b).

4.3.4 Passing Space. If an accessible route has less than 60 in (1525 mm) clear width, then passing spaces at least 60 in by 60 in (1525 mm by 1525 mm) shall be located at reasonable intervals not to exceed 200 ft (61 m). A T-intersection of two corridors or walks is an acceptable passing place.

4.3.5 Head Room. Accessible routes shall comply with 4.4.2.

4.3.6 Surface Textures. The surface of an accessible route shall comply with 4.5.

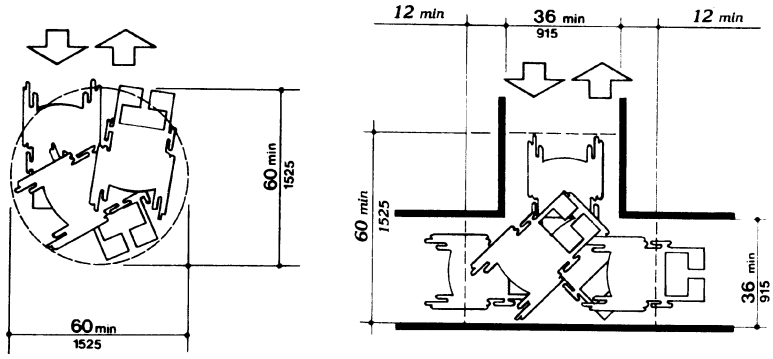

(a)
60-in (1525-mm)-Diameter Space

(b)
T-Shaped Space for 180° Turns

Fig. 3
Wheelchair Turning Space

4.3 Accessible Route

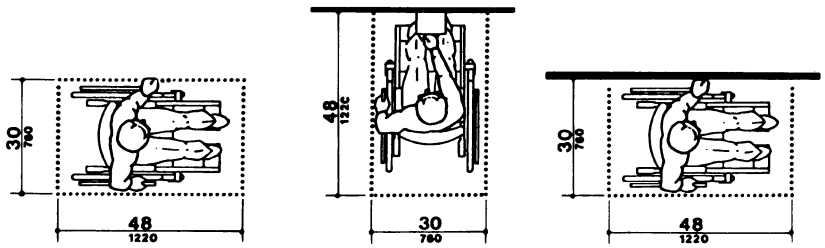

(a)
Clear Floor Space

(b)
Forward Approach

(c)
Parallel Approach

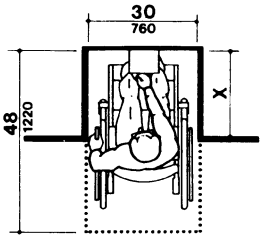

NOTE: x ≤ 24 in (610 mm).

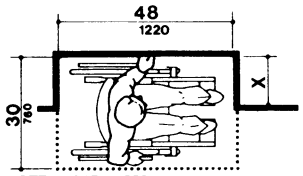

NOTE: x ≤ 15 in (380 mm).

(d)
Clear Floor Space in Alcoves

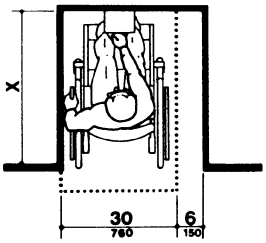

NOTE: If x > 24 in (610 mm), then an additional maneuvering clearance of 6 in (150 mm) shall be provided as shown.

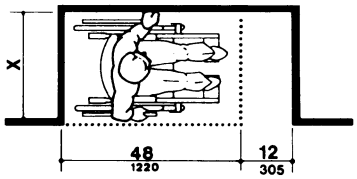

NOTE: If x > 15 in (380 mm), then an additional maneuvering clearance of 12 in (305 mm) shall be provided as shown.

(e)
Additional Maneuvering Clearances for Alcoves

Fig. 4
Minimum Clear Floor Space for Wheelchairs

17

4.3 Accessible Route

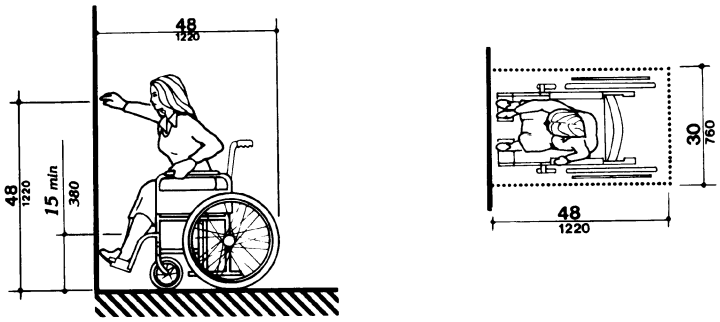

(a)
High Forward Reach Limit

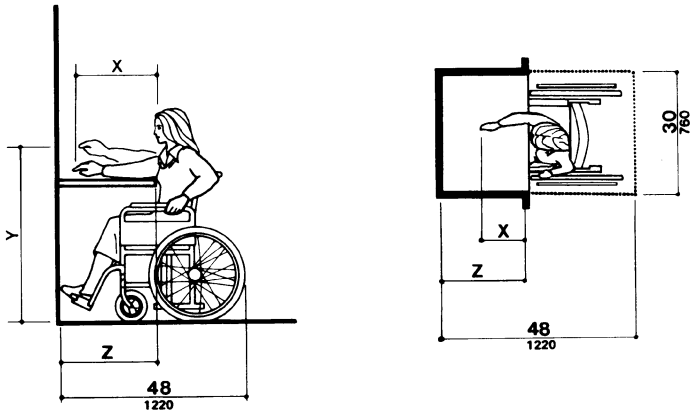

NOTE: x shall be ≤ 25 in (635 mm); z shall be ≥ x. When x < 20 in (510 mm), then y shall be 48 in (1220 mm) maximum. When x is 20 to 25 in (510 to 635 mm), then y shall be 44 in (1120 mm) maximum.

(b)
Maximum Forward Reach over an Obstruction

Fig. 5
Forward Reach

4.3.7 Slope

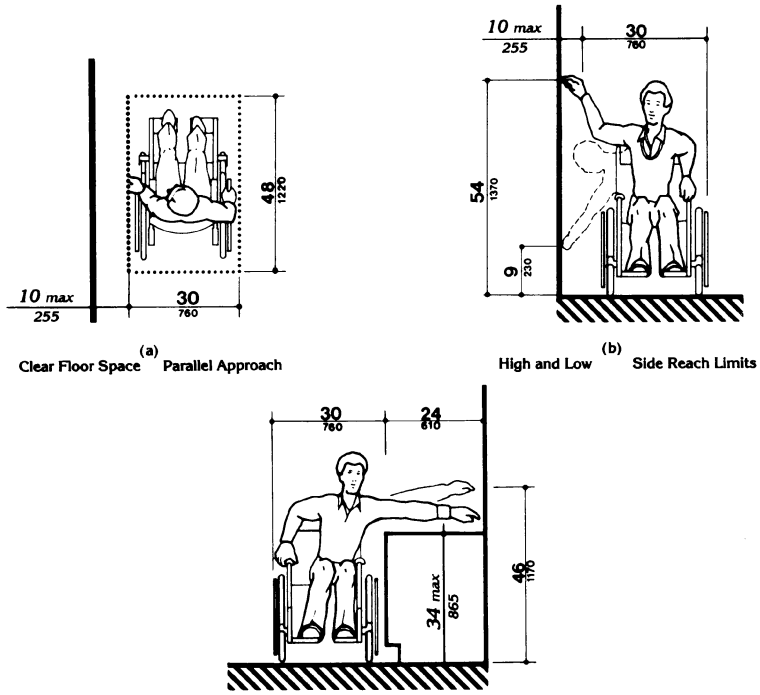

Fig. 6
Side Reach

4.3.7 Slope. An accessible route with a running slope greater than 1:20 is a ramp and shall comply with 4.8. Nowhere shall the cross slope of an accessible route exceed 1:50.

4.3.8 Changes in Levels. Changes in levels along an accessible route shall comply with 4.5.2. If an accessible route has changes in level greater than 1/2 in (13 mm), then a curb ramp, ramp, elevator, or platform lift *(as permitted in 4.1.3 and 4.1.6)* shall be provided that complies with 4.7, 4.8, 4.10, or 4.11, respectively. An accessible route does not include stairs, steps, or escalators. See definition of "egress, means of" in 3.5.

4.3.9 Doors. Doors along an accessible route shall comply with 4.13.

4.3.10* Egress

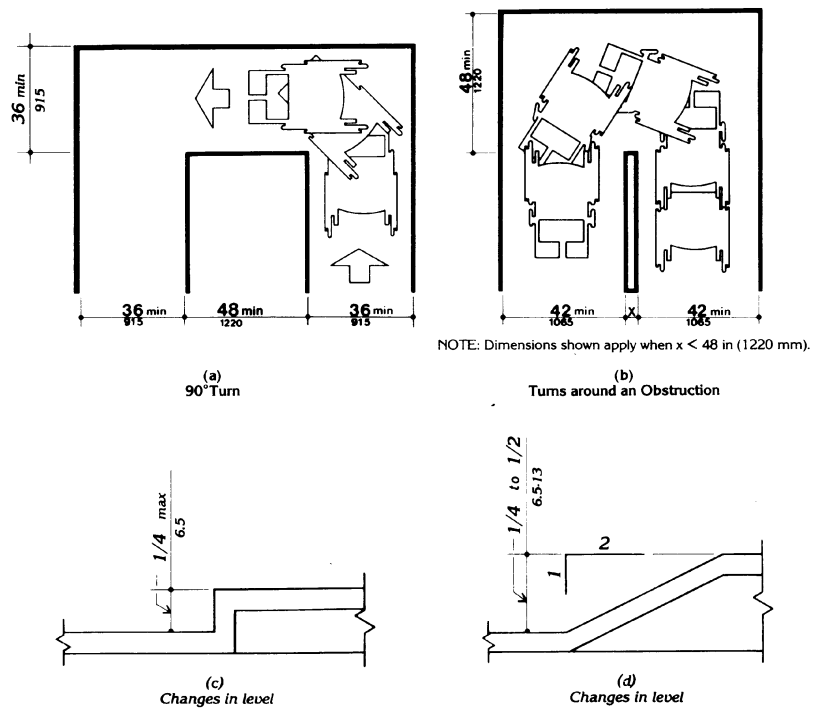

Fig. 7
Accessible Route

4.3.10* Egress. Accessible routes serving any accessible space or element shall also serve as a means of egress for emergencies or connect to an accessible area of *rescue assistance.*

4.3.11 Areas of Rescue Assistance.

4.3.11.1 Location and Construction. *An area of rescue assistance shall be one of the following:*

(1) A portion of a stairway landing within a smokeproof enclosure (complying with local requirements).

(2) A portion of an exterior exit balcony located immediately adjacent to an exit stairway when the balcony complies with local requirements for exterior exit balconies. Openings to the interior of the building located within 20 feet (6 m) of the

area of rescue assistance shall be protected with fire assemblies having a three-fourths hour fire protection rating.

(3) A portion of a one-hour fire-resistive corridor (complying with local requirements for fire-resistive construction and for openings) located immediately adjacent to an exit enclosure.

(4) A vestibule located immediately adjacent to an exit enclosure and constructed to the same fire-resistive standards as required for corridors and openings.

(5) A portion of a stairway landing within an exit enclosure which is vented to the exterior and is separated from the interior of the building with not less than one-hour fire-resistive doors.

(6) When approved by the appropriate local authority, an area or a room which is separated from other portions of the building by a smoke barrier. Smoke barriers shall have a fire-resistive rating of not less than one hour and shall completely enclose the area or room. Doors in the smoke barrier shall be tight-fitting smoke- and draft-control assemblies having a fire-protection rating of not less than 20 minutes and shall be self-closing or automatic closing. The area or room shall be provided with an exit directly to an exit enclosure. Where the room or area exits into an exit enclosure which is required to be of more than one-hour fire-resistive construction, the room or area shall have the same fire-resistive construction, including the same opening protection, as required for the adjacent exit enclosure.

(7) An elevator lobby when elevator shafts and adjacent lobbies are pressurized as required for smokeproof enclosures by local regulations and when complying with requirements herein for size, communication, and signage. Such pressurization system shall be activated by smoke detectors on each floor located in a manner approved by the appropriate local authority. Pressurization equipment and its duct work within the building shall be separated from other portions of the building by a minimum two-hour fire-resistive construction.

4.3.11.2 Size. *Each area of rescue assistance shall provide at least two accessible areas each being not less than 30 inches by 48 inches (760 mm by 1220 mm). The area of rescue assistance shall not encroach on any required exit width. The total number of such 30-inch by 48-inch (760 mm by 1220 mm) areas per story shall be not less than one for every 200 persons of calculated occupant load served by the area of rescue assistance.*

EXCEPTION: The appropriate local authority may reduce the minimum number of 30-inch by 48-inch (760 mm by 1220 mm) areas to one for each area of rescue assistance on floors where the occupant load is less than 200.

4.3.11.3* Stairway Width. *Each stairway adjacent to an area of rescue assistance shall have a minimum clear width of 48 inches between handrails.*

4.3.11.4* Two-way Communication. *A method of two-way communication, with both visible and audible signals, shall be provided between each area of rescue assistance and the primary entry. The fire department or appropriate local authority may approve a location other than the primary entry.*

4.3.11.5 Identification. *Each area of rescue assistance shall be identified by a sign which states "AREA OF RESCUE ASSISTANCE" and displays the international symbol of accessibility. The sign shall be illuminated when exit sign illumination is required. Signage shall also be installed at all inaccessible exits and where otherwise necessary to clearly indicate the direction to areas of rescue assistance. In each area of rescue assistance, instructions on the use of the area under emergency conditions shall be posted adjoining the two-way communication system.*

4.4 Protruding Objects.

4.4.1* General. Objects projecting from walls (for example, telephones) with their leading edges between 27 in and 80 in (685 mm and 2030 mm) above the finished floor shall protrude no more than 4 in (100 mm) into walks, halls, corridors, passageways, or aisles (see Fig. 8(a)). Objects mounted with their leading edges at or below 27 in (685 mm) above the finished floor may protrude any amount (see Fig. 8(a) and (b)). Free-standing objects mounted on posts or pylons may overhang 12 in (305 mm) maximum from 27 in to 80 in (685 mm to 2030 mm) above the ground or

4.4 Protruding Objects

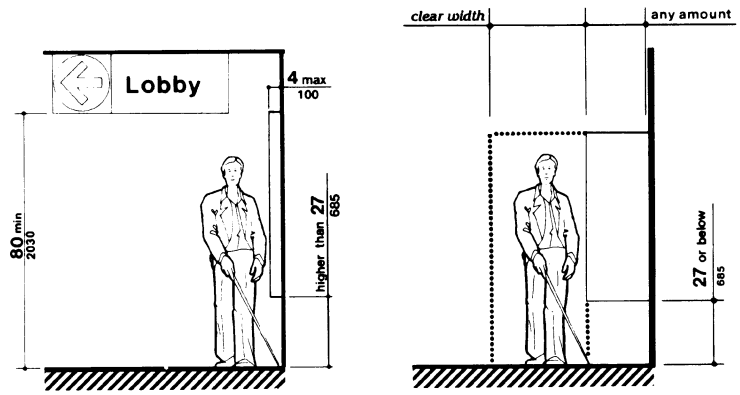

Fig. 8 (a)
Walking Parallel to a Wall

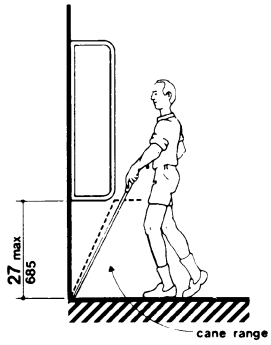

Fig. 8 (b)
Walking Perpendicular to a Wall

Fig. 8
Protruding Objects

finished floor (see Fig. 8(c) and (d)). Protruding objects shall not reduce the clear width of an accessible route or maneuvering space (see Fig. 8(e)).

4.4.2 Head Room. Walks, halls, corridors, passageways, aisles, or other circulation spaces shall have 80 in (2030 mm) minimum clear head room (see Fig. 8(a)). *If vertical clearance of an area adjoining an accessible route is reduced to less than 80 in (nominal dimension), a barrier to warn blind or visually-impaired persons shall be provided (see Fig. 8(c-1)).*

4.5 Ground and Floor Surfaces.

4.5.1* General. Ground and floor surfaces along accessible routes and in accessible rooms and spaces including floors, walks, ramps, stairs, and curb ramps, shall be stable, firm, slip-resistant, and shall comply with 4.5.

4.5.2 Changes in Level. Changes in level up to 1/4 in (6 mm) may be vertical and without edge treatment *(see Fig. 7(c))*. Changes in level between 1/4 in and 1/2 in (6 mm and 13 mm)

4.4 Protruding Objects

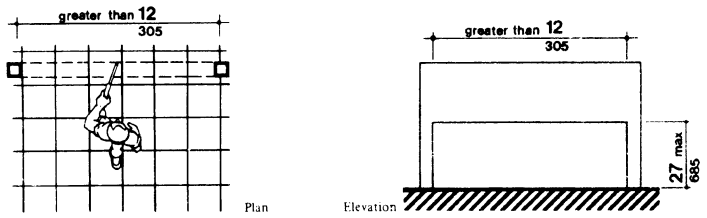

Fig. 8 (c) Free-Standing Overhanging Objects

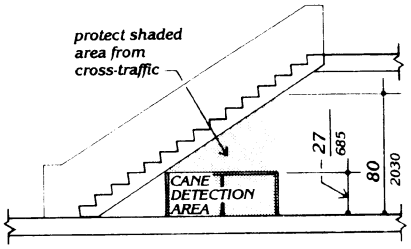

Fig. 8 (c-1) Overhead Hazards

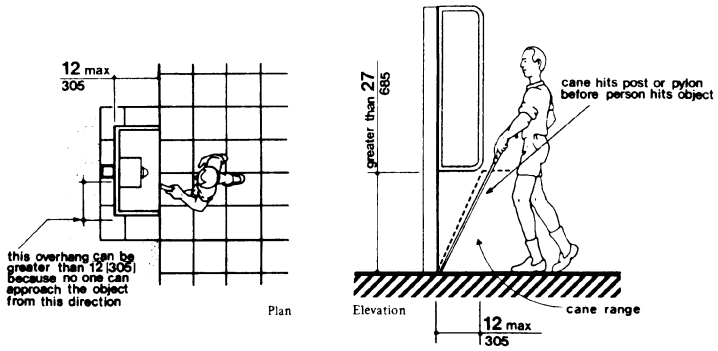

Fig. 8 (d)
Objects Mounted on Posts or Pylons

Fig. 8
Protruding Objects *(Continued)*

4.5 Ground and Floor Surfaces

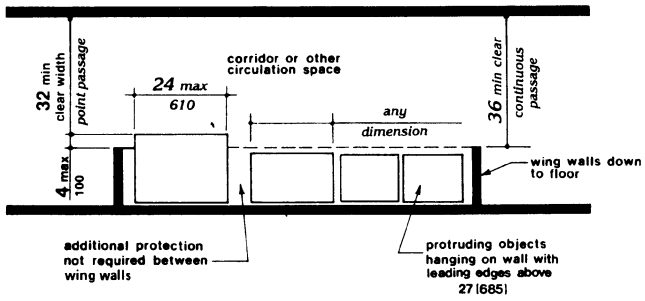

Fig. 8 (e)
Example of Protection around Wall-Mounted Objects and Measurements of Clear Widths

Fig. 8
Protruding Objects *(Continued)*

shall be beveled with a slope no greater than 1:2 *(see Fig. 7(d))*. Changes in level greater than 1/2 in (13 mm) shall be accomplished by means of a ramp that complies with 4.7 or 4.8.

4.5.3* Carpet. If carpet or carpet tile is used on a ground or floor surface, then it shall be securely attached; have a firm cushion, pad, or backing, or no cushion or pad; and have a level loop, textured loop, level cut pile, or level cut/uncut pile texture. The maximum pile *thickness* shall be 1/2 in (13 mm) (see Fig. 8(f)). Exposed edges of carpet shall be fastened to floor surfaces and have trim along the entire length of the exposed edge. Carpet edge trim shall comply with 4.5.2.

4.5.4 Gratings. If gratings are located in walking surfaces, then they shall have spaces no greater than 1/2 in (13 mm) wide in one direction *(see Fig. 8(g))*. If gratings have elongated openings, then they shall be placed so that the long dimension is perpendicular to the dominant direction of travel *(see Fig. 8(h))*.

4.6 Parking and Passenger Loading Zones.

4.6.1 Minimum Number. *Parking spaces required to be accessible by 4.1 shall comply with 4.6.2 through 4.6.5. Passenger loading zones required to be accessible by 4.1 shall comply with 4.6.5 and 4.6.6.*

4.6 Parking and Passenger Loading Zones

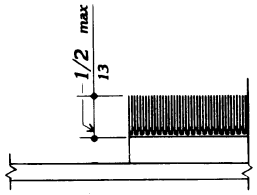

Fig. 8 (f)
Carpet Pile Thickness

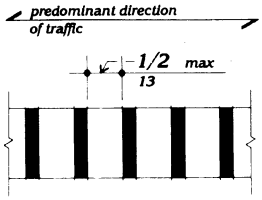

Fig. 8 (g)
Gratings

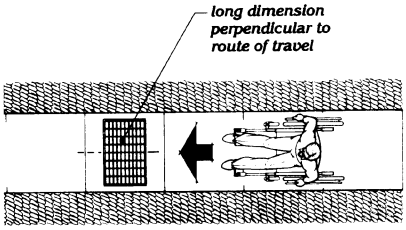

Fig. 8 (h)
Grating Orientation

4.6.2 Location. *Accessible parking spaces serving* a particular building shall be located on the shortest accessible route of travel *from adjacent parking* to an accessible entrance. *In parking facilities* that do not serve a particular building, *accessible parking* shall be located on the shortest accessible route *of travel* to an accessible pedestrian entrance of the parking facility. *In buildings with multiple accessible entrances with adjacent parking, accessible parking spaces shall be dispersed and located closest to the accessible entrances.*

4.6.3* Parking Spaces. *Accessible* parking spaces shall be at least 96 in (2440 mm) wide. Parking access aisles shall be part of an accessible route to the building or facility entrance and shall comply with 4.3. Two accessible parking spaces may share a common access aisle (see Fig. 9). Parked vehicle overhangs shall not reduce the clear width of an accessible route. *Parking spaces and access aisles shall be level with surface slopes not exceeding 1:50 (2%) in all directions.*

4.6.4* Signage. Accessible parking spaces shall be designated as reserved by a sign showing the symbol of accessibility (see 4.30.7). *Spaces complying with 4.1.2(5)(b) shall have an additional sign "Van-Accessible" mounted below the symbol of accessibility.* Such signs shall *be located so they cannot* be obscured by a vehicle parked in the space.

4.6.5* *Vertical Clearance.* *Provide minimum vertical clearance of 114 in (2895 mm) at accessible passenger loading zones and along at least one vehicle access route to such areas from site entrance(s) and exit(s). At parking spaces complying with 4.1.2(5)(b), provide minimum vertical clearance of 98 in (2490 mm) at the parking space and along at least one vehicle access route to such spaces from site entrance(s) and exit(s).*

4.6.6 Passenger Loading Zones. Passenger loading zones shall provide an access aisle at least 60 in *(1525 mm)* wide and 20 ft *(240 in) (6100 mm)* long adjacent and parallel to the vehicle pull-up space (see Fig. 10). If there are curbs between the access aisle and the vehicle pull-up space, then a curb ramp complying with 4.7 shall be provided. *Vehicle standing spaces and access aisles shall be level with*

4.7 Curb Ramps

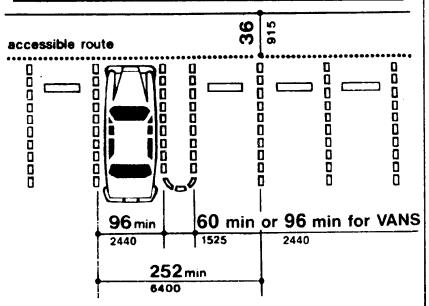

Fig. 9
Dimensions of Parking Spaces

surface slopes not exceeding 1:50 (2%) in all directions.

4.7 Curb Ramps.

4.7.1 Location. Curb ramps complying with 4.7 shall be provided wherever an accessible route crosses a curb.

4.7.2 Slope. Slopes of curb ramps shall comply with 4.8.2. The slope shall be measured as shown in Fig. 11. *Transitions from ramps to walks, gutters, or streets shall be flush and free of abrupt changes. Maximum slopes of adjoining gutters, road surface immediately adjacent to the curb ramp, or accessible route shall not exceed 1:20.*

4.7.3 Width. The minimum width of a curb ramp shall be 36 in (915 mm), exclusive of flared sides.

4.7.4 Surface. Surfaces of curb ramps shall comply with 4.5.

4.7.5 Sides of Curb Ramps. If a curb ramp is located where pedestrians must walk across the ramp, *or where it is not protected by handrails or guardrails,* it shall have flared sides; the maximum slope of the flare shall be 1:10 (see Fig. 12(a)). Curb ramps with returned curbs may be used where pedestrians would not normally walk across the ramp (see Fig. 12(b)).

4.7.6 Built-up Curb Ramps. Built-up curb ramps shall be located so that they do not project into vehicular traffic lanes (see Fig. 13).

4.7.7 *Detectable Warnings.* A curb ramp shall have a *detectable* warning complying with 4.29.2. *The detectable warning shall extend* the full width and depth of the curb ramp.

4.7.8 Obstructions. Curb ramps shall be located or protected to prevent their obstruction by parked vehicles.

4.7.9 Location at Marked Crossings. Curb ramps at marked crossings shall be wholly contained within the markings, excluding any flared sides (see Fig. 15).

4.7.10 Diagonal Curb Ramps. If diagonal (or corner type) curb ramps have returned curbs or other well-defined edges, such edges shall be parallel to the direction of pedestrian flow. The bottom of diagonal curb ramps shall have 48 in (1220 mm) minimum clear space as shown in Fig. 15(c) and (d). If diagonal curb ramps are provided at marked crossings, the 48 in (1220 mm) clear space shall be within the markings (see Fig. 15(c) and (d)). If diagonal curb ramps have flared sides, they shall also have at least a 24 in (610 mm) long segment of straight curb located on each side of the curb ramp and within the marked crossing (see Fig. 15(c)).

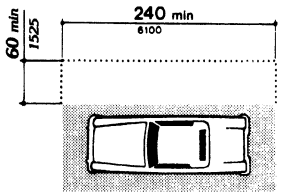

Fig. 10
Access Aisle at Passenger Loading Zones

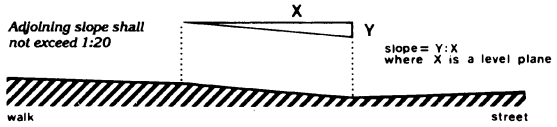

Fig. 11
Measurement of Curb Ramp Slopes

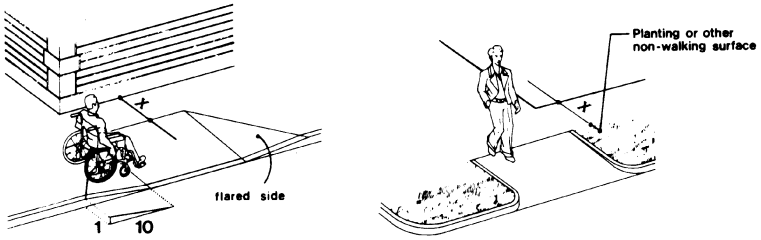

(a)
Flared Sides

(b)
Returned Curb

If X is less than 48 in, then the slope of the flared side shall not exceed 1:12.

Fig. 12
Sides of Curb Ramps

4.7.11 Islands. Any raised islands in crossings shall be cut through level with the street or have curb ramps at both sides and a level area at least 48 in (1220 mm) long between the curb ramps in the part of the island intersected by the crossings (see Fig. 15(a) and (b)).

4.8 Ramps.

4.8.1* General. Any part of an accessible route with a slope greater than 1:20 shall be considered a ramp and shall comply with 4.8.

4.8.2* Slope and Rise. The least possible slope shall be used for any ramp. The maximum slope of a ramp in new construction shall be 1:12. The maximum rise for any run shall be 30 in (760 mm) (see Fig. 16). Curb ramps and ramps to be constructed on existing sites or in existing buildings or facilities may have slopes and rises as *allowed in 4.1.6(3)(a)* if space limitations prohibit the use of a 1:12 slope or less.

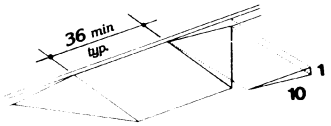

Fig. 13
Built-Up Curb Ramp

4.8 Ramps

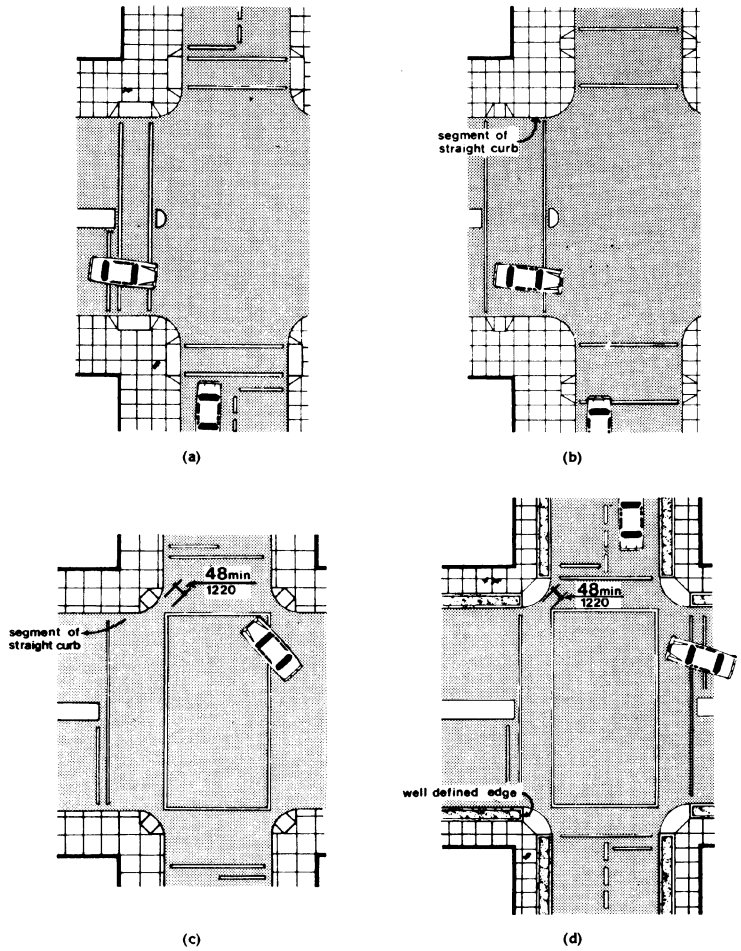

Fig. 15
Curb Ramps at Marked Crossings

28

4.8 Ramps

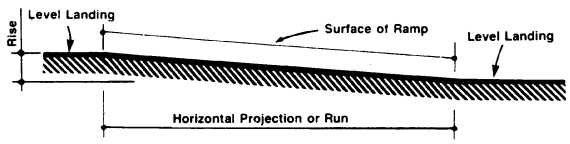

	Maximum Rise		Maximum Horizontal Projection	
Slope	in	mm	ft	m
1:12 to < 1:16	30	760	30	9
1:16 to < 1:20	30	760	40	12

Fig. 16
Components of a Single Ramp Run and Sample Ramp Dimensions

4.8.3 Clear Width. The minimum clear width of a ramp shall be 36 in (915 mm).

4.8.4* Landings. Ramps shall have level landings at bottom and top of *each ramp and* each *ramp* run. Landings shall have the following features:

(1) The landing shall be at least as wide as the ramp run leading to it.

(2) The landing length shall be a minimum of 60 in (1525 mm) clear.

(3) If ramps change direction at landings, the minimum landing size shall be 60 in by 60 in (1525 mm by 1525 mm).

(4) If a doorway is located at a landing, then the area in front of the doorway shall comply with 4.13.6.

4.8.5* Handrails. If a ramp run has a rise greater than 6 in (150 mm) or a horizontal projection greater than 72 in (1830 mm), then it shall have handrails on both sides. Handrails are not required on curb ramps *or adjacent to seating in assembly areas*. Handrails shall comply with 4.26 and shall have the following features:

(1) Handrails shall be provided along both sides of ramp segments. The inside handrail on switchback or dogleg ramps shall always be continuous.

(2) If handrails are not continuous, they shall extend at least 12 in (305 mm) beyond the top and bottom of the ramp segment and shall be parallel with the floor or ground surface (see Fig. 17).

(3) The clear space between the handrail and the wall shall be 1 - 1/2 in (38 mm).

(4) Gripping surfaces shall be continuous.

(5) Top of handrail gripping surfaces shall be mounted between 34 in and 38 in (865 mm and 965 mm) above ramp surfaces.

(6) Ends of handrails shall be either rounded or returned smoothly to floor, wall, or post.

(7) Handrails shall not rotate within their fittings.

4.8.6 Cross Slope and Surfaces. The cross slope of ramp surfaces shall be no greater than 1:50. Ramp surfaces shall comply with 4.5.

4.9 Stairs

4.8.7 Edge Protection. Ramps and landings with drop-offs shall have curbs, walls, railings, or projecting surfaces that prevent people from slipping off the ramp. Curbs shall be a minimum of 2 in (50 mm) high (see Fig. 17).

4.8.8 Outdoor Conditions. Outdoor ramps and their approaches shall be designed so that water will not accumulate on walking surfaces.

4.9 Stairs.

4.9.1* Minimum Number. *Stairs required to be accessible by 4.1 shall comply with 4.9.*

4.9.2 Treads and Risers. On any given flight of stairs, all steps shall have uniform riser heights and uniform tread widths. Stair treads shall be no less than 11 in (280 mm) wide, measured from riser to riser (see Fig. 18(a)). *Open risers are not permitted.*

4.9.3 Nosings. The undersides of nosings shall not be abrupt. The radius of curvature at the leading edge of the tread shall be no greater than 1/2 in (13 mm). Risers shall be sloped or the underside of the nosing shall have an angle not less than 60 degrees from the horizontal. Nosings shall project no more than 1-1/2 in (38 mm) (see Fig. 18).

4.9.4 Handrails. Stairways shall have handrails at both sides of all stairs. Handrails shall comply with 4.26 and shall have the following features:

(1) Handrails shall be continuous along both sides of stairs. The inside handrail on switchback or dogleg stairs shall always be continuous (see Fig. 19(a) and (b)).

(2) If handrails are not continuous, they shall extend at least 12 in (305 mm) beyond the top riser and at least 12 in (305 mm) plus the width of one tread beyond the bottom riser. At the top, the extension shall be parallel with the floor or ground surface. At the bottom, the handrail shall continue to slope for a distance of the width of one tread from the bottom riser; the remainder of the extension shall be horizontal (see Fig. 19(c) and (d)). Handrail extensions shall comply with 4.4.

(3) The clear space between handrails and wall shall be 1-1/2 in (38 mm).

(4) Gripping surfaces shall be uninterrupted by newel posts, other construction elements, or obstructions.

(5) Top of handrail gripping surface shall be mounted between 34 in and 38 in (865 mm and 965 mm) above stair nosings.

(6) Ends of handrails shall be either rounded or returned smoothly to floor, wall or post.

(7) Handrails shall not rotate within their fittings.

4.9.5 *Detectable* Warnings at Stairs. *(Reserved).*

4.9.6 Outdoor Conditions. Outdoor stairs and their approaches shall be designed so that water will not accumulate on walking surfaces.

4.10 Elevators.

4.10.1 General. *Accessible* elevators shall be on an accessible route and shall comply with 4.10 and with the *ASME A17.1-1990*, Safety Code for Elevators and Escalators. *Freight elevators shall not be considered as meeting the requirements of this section unless the only elevators provided are used as combination passenger and freight elevators for the public and employees.*

4.10.2 Automatic Operation. Elevator operation shall be automatic. Each car shall be equipped with a self-leveling feature that will automatically bring the car to floor landings within a tolerance of 1/2 in (13 mm) under rated loading to zero loading conditions. This self-leveling feature shall be automatic and independent of the operating device and shall correct the overtravel or undertravel.

4.10.3 Hall Call Buttons. Call buttons in elevator lobbies and halls shall be centered at 42 in (1065 mm) above the floor. Such call buttons shall have visual signals to indicate when each call is registered and when each call is answered. Call buttons shall be a minimum of 3/4 in (19 mm) in the smallest dimension. The button designating the up direction shall be on top. (See Fig. 20.) *Buttons shall be raised or flush. Objects mounted beneath hall call buttons shall not project into the elevator lobby more than 4 in (100 mm).*

4.10 Elevators

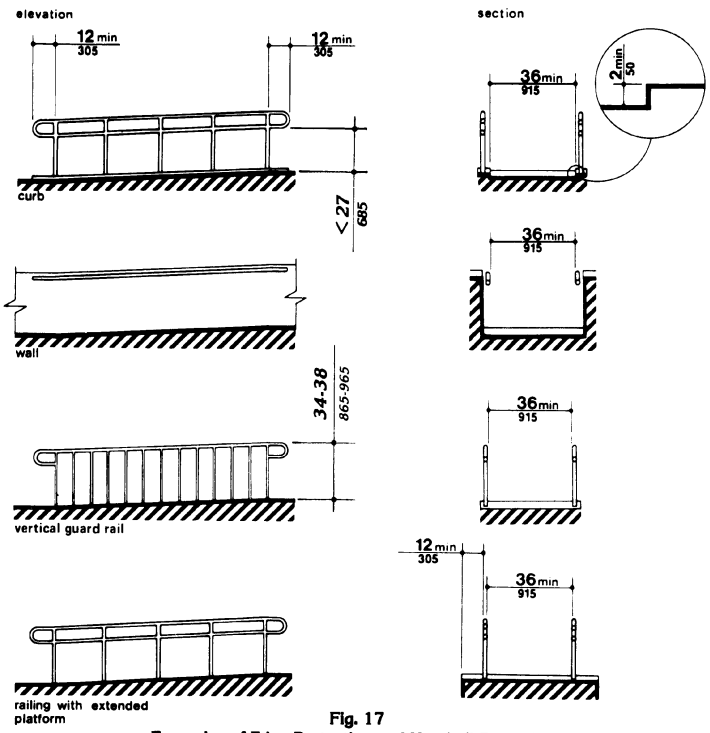

Fig. 17
Examples of Edge Protection and Handrail Extensions

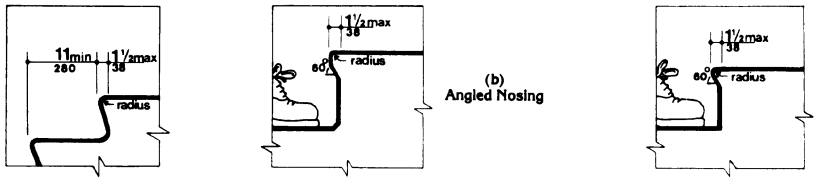

(a)
Flush Riser

(b)
Angled Nosing

(c)
Rounded Nosing

Fig. 18
Usable Tread Width and Examples of Acceptable Nosings

31

4.10 Elevators

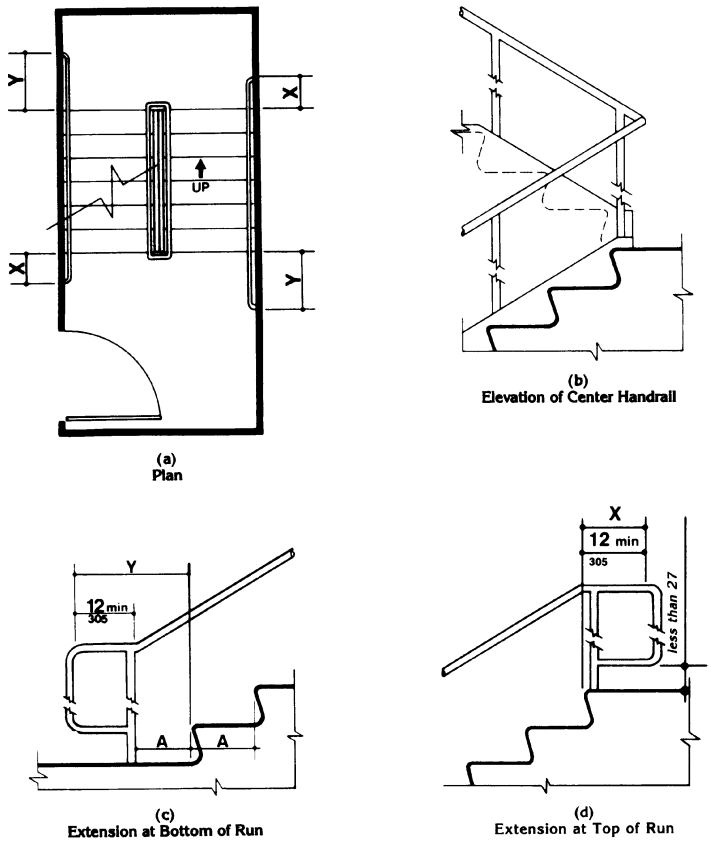

NOTE:

X is the 12 in minimum handrail extension required at each top riser.

Y is the minimum handrail extension of 12 in plus the width of one tread that is required at each bottom riser.

Fig. 19
Stair Handrails

4.10 Elevators

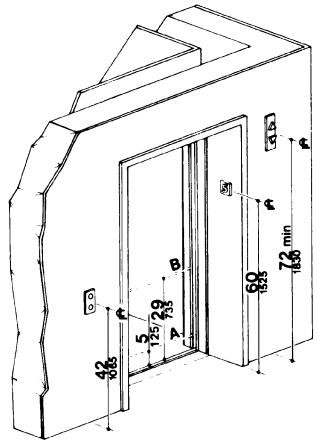

NOTE: The automatic door reopening device is activated if an object passes through either line A or line B. Line A and line B represent the vertical locations of the door reopening device not requiring contact.

Fig. 20
Hoistway and Elevator Entrances

4.10.4 Hall Lanterns. A visible and audible signal shall be provided at each hoistway entrance to indicate which car is answering a call. Audible signals shall sound once for the up direction and twice for the down direction or shall have verbal annunciators that say "up" or "down." Visible signals shall have the following features:

(1) Hall lantern fixtures shall be mounted so that their centerline is at least 72 in (1830 mm) above the lobby floor. (See Fig. 20.)

(2) Visual elements shall be at least 2-1/2 in (64 mm) in the smallest dimension.

(3) Signals shall be visible from the vicinity of the hall call button (see Fig. 20). In-car lanterns located in cars, visible from the vicinity of hall call buttons, and conforming to the above requirements, shall be acceptable.

4.10.5 *Raised and Braille* Characters on Hoistway Entrances. All elevator hoistway entrances shall have *raised and Braille* floor designations provided on both jambs. The centerline of the characters shall be 60 in (1525 mm) *above finish* floor. Such characters shall be 2 in (50 mm) high and shall comply with 4.30.4. Permanently applied plates are acceptable if they are permanently fixed to the jambs. (See Fig. 20).

4.10.6* Door Protective and Reopening Device. Elevator doors shall open and close automatically. They shall be provided with a reopening device that will stop and reopen a car door and hoistway door automatically if the door becomes obstructed by an object or person. The device shall be capable of completing these operations without requiring contact for an obstruction passing through the opening at heights of 5 in and 29 in (125 mm and 735 mm) above finish floor (see Fig. 20). Door reopening devices shall remain effective for at least 20 seconds. After such an interval, doors may close in accordance with the requirements of *ASME A17.1-1990.*

4.10.7* Door and Signal Timing for Hall Calls. The minimum acceptable time from notification that a car is answering a call until the doors of that car start to close shall be calculated from the following equation:

$$T = D/(1.5\ \text{ft/s}) \text{ or } T = D/(445\ \text{mm/s})$$

where T total time in seconds and D distance (in feet or millimeters) from a point in the lobby or corridor 60 in (1525 mm) directly in front of the farthest call button controlling that car to the centerline of its hoistway door (see Fig. 21). For cars with in-car lanterns, T begins when the lantern is visible from the vicinity of hall call buttons and an audible signal is sounded. *The minimum acceptable notification time shall be 5 seconds.*

4.10.8 Door Delay for Car Calls. The minimum time for elevator doors to remain fully open in response to a car call shall be 3 seconds.

4.10.9 Floor Plan of Elevator Cars. The floor area of elevator cars shall provide space for wheelchair users to enter the car, maneuver

4.10.12 Car Controls

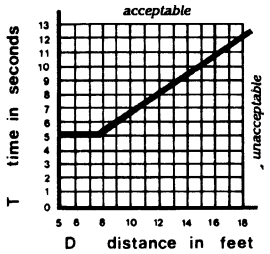

Fig. 21
Graph of Timing Equation

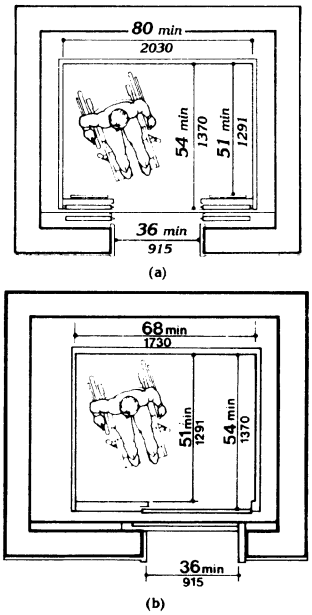

Fig. 22
Minimum Dimensions of Elevator Cars

within reach of controls, and exit from the car. Acceptable door opening and inside dimensions shall be as shown in Fig. 22. The clearance between the car platform sill and the edge of any hoistway landing shall be no greater than 1-1/4 in (32 mm).

4.10.10 Floor Surfaces. Floor surfaces shall comply with 4.5.

4.10.11 Illumination Levels. The level of illumination at the car controls, platform, and car threshold and landing sill shall be at least 5 footcandles (53.8 lux).

4.10.12* Car Controls. Elevator control panels shall have the following features:

(1) Buttons. All control buttons shall be at least 3/4 in (19 mm) in their smallest dimension. They *shall* be *raised* or flush.

(2) Tactile, *Braille*, and Visual Control Indicators. All control buttons shall be designated by *Braille and by raised* standard alphabet characters for letters, arabic characters for numerals, or standard symbols as shown in Fig. 23(a), and as required in *ASME A17.1-1990. Raised and Braille* characters and symbols shall comply with 4.30. The call button for the main entry floor shall be designated by a *raised* star at the left of the floor designation (see Fig. 23(a)). All raised designations for control buttons shall be placed immediately to the left of the button to which they apply. Applied plates, permanently attached, are an acceptable means to provide raised control designations. Floor buttons shall be provided with visual indicators to show when each call is registered. The visual indicators shall be extinguished when each call is answered.

(3) Height. All floor buttons shall be no higher than 54 in (1370 mm) above the *finish* floor *for side approach and 48 in (1220 mm) for front approach.* Emergency controls, including the emergency alarm and emergency stop, shall be grouped at the bottom of the panel and shall have their centerlines no less than 35 in (890 mm) above the finish floor (see Fig. 23(a) and (b)).

4.10.13* Car Position Indicators

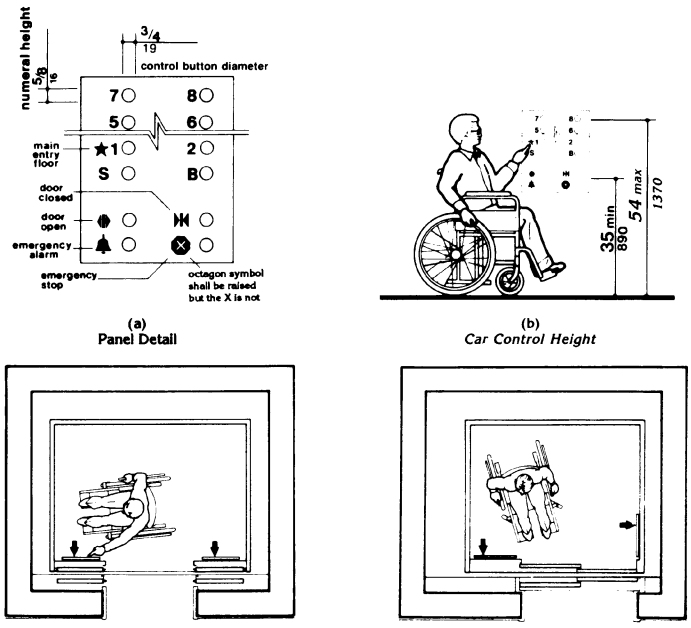

(a)
Panel Detail

(b)
Car Control Height

(c)
Alternate Locations of Panel with Center Opening Door

(d)
Alternate Locations of Panel with Side Opening Door

Fig. 23
Car Controls

(4) Location. Controls shall be located on a front wall if cars have center opening doors, and at the side wall or at the front wall next to the door if cars have side opening doors (see Fig. 23(c) and (d)).

4.10.13* Car Position Indicators. In elevator cars, a visual car position indicator shall be provided above the car control panel or over the door to show the position of the elevator in the hoistway. As the car passes or stops at a floor served by the elevators, the corresponding numerals shall illuminate, and an audible signal shall sound. Numerals shall be a minimum of 1/2 in (13 mm) high. The audible signal shall be no less than 20 decibels with a frequency no higher than 1500 Hz. An automatic verbal announcement of the floor number at which a car stops or which a car passes may be substituted for the audible signal.

4.10.14* Emergency Communications. If provided, emergency two-way communication systems between the elevator and a point outside the hoistway shall comply with *ASME*

4.11 Platform Lifts *(Wheelchair Lifts)*

A17.1-1990. The highest operable part of a two-way communication system shall be a maximum of *48 in (1220 mm)* from the floor of the car. It shall be identified by a raised symbol and lettering complying with 4.30 and located adjacent to the device. If the system uses a handset then the length of the cord from the panel to the handset shall be at least 29 in (735 mm). *If the system is located in a closed compartment the compartment door hardware shall conform to 4.27, Controls and Operating Mechanisms. The emergency intercommunication system shall not require voice communication.*

4.11 Platform Lifts *(Wheelchair Lifts).*

4.11.1 Location. *Platform lifts (wheelchair lifts) permitted by 4.1 shall comply with the requirements of 4.11.*

4.11.2* Other Requirements. If platform lifts *(wheelchair lifts)* are used, they shall comply with 4.2.4, 4.5, 4.27, and *ASME A17.1 Safety Code for Elevators and Escalators, Section XX, 1990.*

4.11.3 Entrance. *If platform lifts are used then they shall facilitate unassisted entry, operation, and exit from the lift in compliance with 4.11.2.*

4.12 Windows.

4.12.1* General. *(Reserved).*

4.12.2* Window Hardware. *(Reserved).*

4.13 Doors.

4.13.1 General. *Doors required to be accessible by 4.1* shall comply with the requirements of 4.13.

4.13.2 Revolving Doors and Turnstiles. Revolving doors or turnstiles shall not be the only means of passage at an accessible entrance or along an accessible route. *An accessible gate or door shall be provided adjacent to the turnstile or revolving door and shall be so designed as to facilitate the same use pattern.*

4.13.3 Gates. Gates, including ticket gates, shall meet all applicable specifications of 4.13.

4.13.4 Double-Leaf Doorways. If doorways have two *independently operated* door leaves, then at least one leaf shall meet the specifications in 4.13.5 and 4.13.6. That leaf shall be an active leaf.

4.13.5 Clear Width. Doorways shall have a minimum clear opening of 32 in (815 mm) with the door open 90 degrees, measured between the face of the door and the *opposite* stop (see Fig. 24(a), (b), (c), and (d)). Openings more than 24 in (610 mm) in depth shall comply with 4.2.1 and 4.3.3 (see Fig. 24(e)).

EXCEPTION: Doors not requiring full user passage, such as shallow closets, may have the clear opening reduced to 20 in (510 mm) minimum.

4.13.6 Maneuvering Clearances at Doors. Minimum maneuvering clearances at doors that are not automatic or power-assisted shall be as shown in Fig. 25. The floor or ground area within the required clearances shall be level and clear.

EXCEPTION: Entry doors to acute care hospital bedrooms for in-patients shall be exempted from the requirement for space at the latch side of the door (see dimension "x" in Fig. 25) if the door is at least 44 in (1120 mm) wide.

4.13.7 Two Doors in Series. The minimum space between two hinged or pivoted doors in series shall be 48 in (1220 mm) plus the width of any door swinging into the space. Doors in series shall swing either in the same direction or away from the space between the doors (see Fig. 26).

4.13.8* Thresholds at Doorways. Thresholds at doorways shall not exceed 3/4 in (19 mm) in height for exterior sliding doors or 1/2 in (13 mm) for other types of doors. Raised thresholds and floor level changes at accessible doorways shall be beveled with a slope no greater than 1:2 (see 4.5.2).

4.13.9* Door Hardware. Handles, pulls, latches, locks, and other operating devices on accessible doors shall have a shape that is easy

4.13 Doors

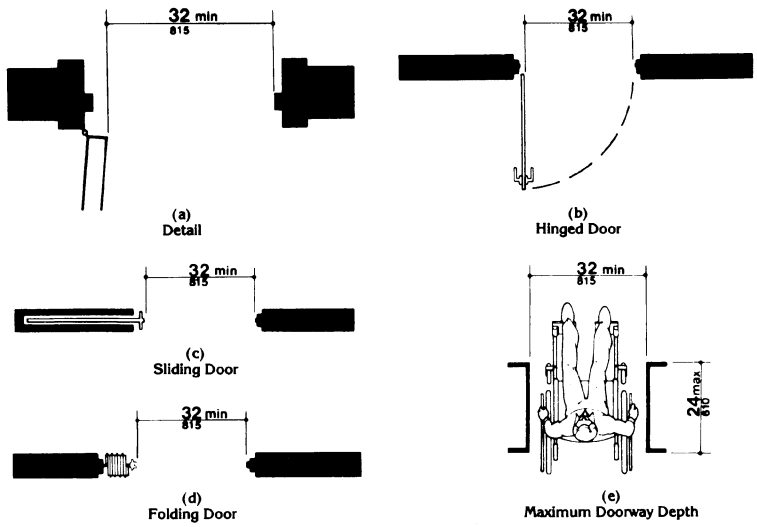

Fig. 24
Clear Doorway Width and Depth

to grasp with one hand and does not require tight grasping, tight pinching, or twisting of the wrist to operate. Lever-operated mechanisms, push-type mechanisms, and U-shaped handles are acceptable designs. When sliding doors are fully open, operating hardware shall be exposed and usable from both sides. *Hardware required for accessible door passage shall be mounted no higher than 48 in (1220 mm) above finished floor.*

4.13.10* Door Closers. If a door has a closer, then the sweep period of the closer shall be adjusted so that from an open position of 70 degrees, the door will take at least 3 seconds to move to a point 3 in (75 mm) from the latch, measured to the leading edge of the door.

4.13.11* Door Opening Force. The maximum force for pushing or pulling open a door shall be as follows:

(1) Fire doors shall have the minimum opening force allowable by the appropriate administrative authority.

(2) Other doors.

(a) exterior hinged doors: *(Reserved).*

(b) interior hinged doors: 5 lbf (22.2N)

(c) sliding or folding doors: 5 lbf (22.2N)

These forces do not apply to the force required to retract latch bolts or disengage other devices that may hold the door in a closed position.

4.13 Doors

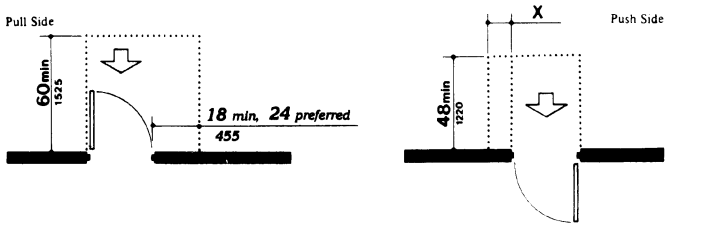

NOTE: x = 12 in (305 mm) if door has both a closer and latch.

(a)
Front Approaches — Swinging Doors

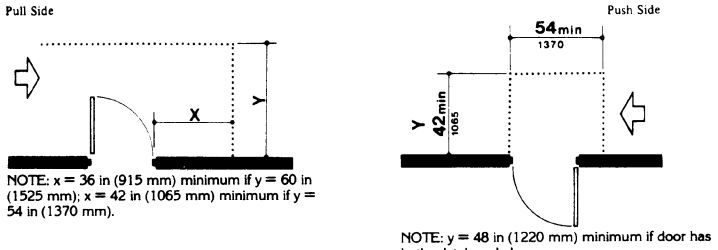

NOTE: x = 36 in (915 mm) minimum if y = 60 in (1525 mm); x = 42 in (1065 mm) minimum if y = 54 in (1370 mm).

NOTE: y = 48 in (1220 mm) minimum if door has both a latch and closer.

(b)
Hinge Side Approaches — Swinging Doors

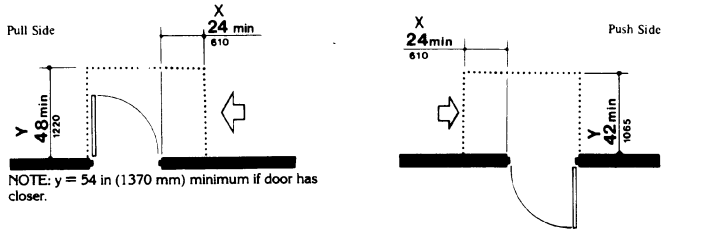

NOTE: y = 54 in (1370 mm) minimum if door has closer.

NOTE: y = 48 in (1220 mm) minimum if door has closer.

(c)
Latch Side Approaches — Swinging Doors

NOTE: All doors in alcoves shall comply with the clearances for front approaches.

Fig. 25
Maneuvering Clearances at Doors

4.13 Doors

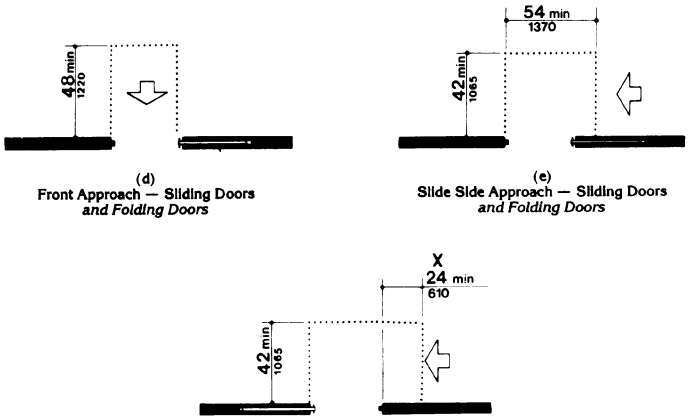

(d)
Front Approach — Sliding Doors *and Folding Doors*

(e)
Slide Side Approach — Sliding Doors *and Folding Doors*

(f)
Latch Side Approach — Sliding Doors *and Folding Doors*

NOTE: All doors in alcoves shall comply with the clearances for front approaches.

Fig. 25
Maneuvering Clearances at Doors *(Continued)*

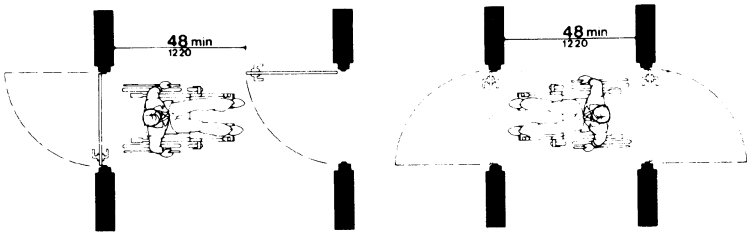

Fig. 26
Two Hinged Doors in Series

4.13.12* Automatic Doors and Power-Assisted Doors. If an automatic door is used, then it shall comply with *ANSI/BHMA A156.10-1985*. Slowly opening, low-powered, automatic doors shall *comply with ANSI A156.19-1984*. Such doors shall not open to back check faster than 3 seconds and shall require no more than 15 lbf (66.6N) to stop door movement. If a power-assisted door is used, its door-opening force shall comply with 4.13.11 and its closing shall conform to the requirements in *ANSI A156.19-1984*.

4.14 Entrances.

4.14.1 Minimum Number. *Entrances required to be accessible by 4.1* shall be part of an accessible route complying with 4.3. Such entrances shall be connected by an accessible route to public transportation stops, to accessible parking and passenger loading zones, and to public streets or sidewalks if available (see 4.3.2(1)). They shall also be connected by an accessible route to all accessible spaces or elements within the building or facility.

4.14.2 Service Entrances. A service entrance shall not be the sole accessible entrance unless it is the only entrance to a building or facility (for example, in a factory or garage).

4.15 Drinking Fountains and Water Coolers.

4.15.1 Minimum Number. *Drinking fountains or water coolers required to be accessible by 4.1* shall comply with 4.15.

4.15.2* Spout Height. Spouts shall be no higher than 36 in (915 mm), measured from the floor or ground surfaces to the spout outlet (see Fig. 27(a)).

4.15.3 Spout Location. The spouts of drinking fountains and water coolers shall be at the front of the unit and shall direct the water flow in a trajectory that is parallel or nearly parallel to the front of the unit. The spout shall provide a flow of water at least 4 in (100 mm) high so as to allow the insertion of a cup or glass under the flow of water. *On an accessible drinking fountain with a round or oval bowl, the spout must be positioned so the flow of water is within 3 in (75 mm) of the front edge of the fountain.*

4.15.4 Controls. Controls shall comply with 4.27.4. *Unit controls shall be front mounted or side mounted near the front edge.*

4.15.5 Clearances.

(1) Wall- and post-mounted cantilevered units shall have a clear knee space between the bottom of the apron and the floor or ground at least 27 in (685 mm) high, 30 in (760 mm) wide, and 17 in to 19 in (430 mm to 485 mm) deep (see Fig. 27(a) and (b)). Such units shall also have a minimum clear floor space 30 in by 48 in (760 mm by 1220 mm) to allow a person in a wheelchair to approach the unit facing forward.

(2) Free-standing or built-in units not having a clear space under them shall have a clear floor space at least 30 in by 48 in (760 mm by 1220 mm) that allows a person in a wheelchair to make a parallel approach to the unit (see Fig. 27(c) and (d)). This clear floor space shall comply with 4.2.4.

4.16 Water Closets.

4.16.1 General. Accessible water closets shall comply with 4.16.

4.16.2 Clear Floor Space. Clear floor space for water closets not in stalls shall comply with Fig. 28. Clear floor space may be arranged to allow either a left-handed or right-handed approach.

4.16.3* Height. The height of water closets shall be 17 in to 19 in (430 mm to 485 mm), measured to the top of the toilet seat (see Fig. 29(b)). *Seats shall not be sprung to return to a lifted position.*

4.16.4* Grab Bars. Grab bars for water closets not located in stalls shall comply with 4.26 and Fig. 29. *The grab bar behind the water closet shall be 36 in (915 mm) minimum.*

4.16.5* Flush Controls. Flush controls shall be hand operated *or automatic* and shall comply with 4.27.4. Controls for flush valves

shall be mounted on the wide side of toilet areas no more than 44 in (1120 mm) above the floor.

4.16.6 Dispensers. Toilet paper dispensers shall be installed within reach, as shown in Fig. 29(b). *Dispensers that control delivery, or that do not permit continuous paper flow, shall not be used.*

4.17 Toilet Stalls.

4.17.1 Location. Accessible toilet stalls shall be on an accessible route and shall meet the requirements of 4.17.

4.17.2 Water Closets. Water closets in accessible stalls shall comply with 4.16.

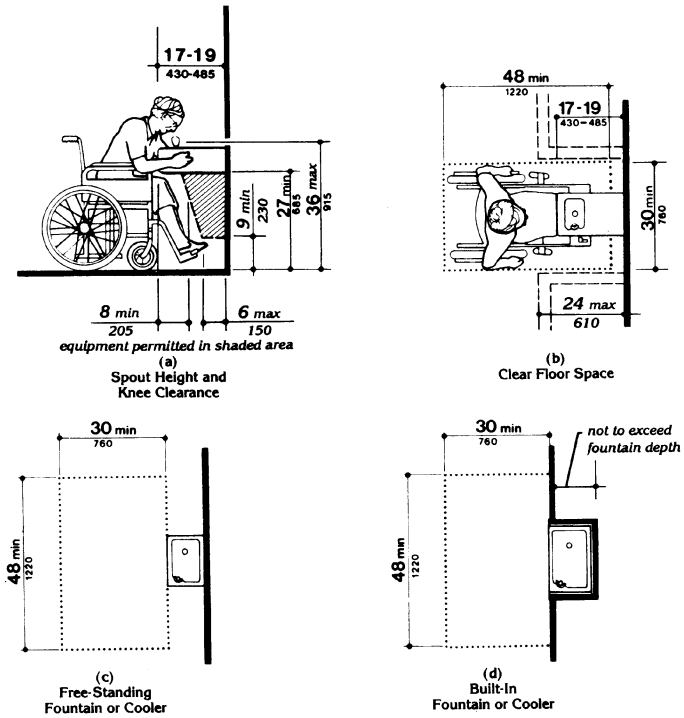

Fig. 27
Drinking Fountains and Water Coolers

4.17 Toilet Stalls

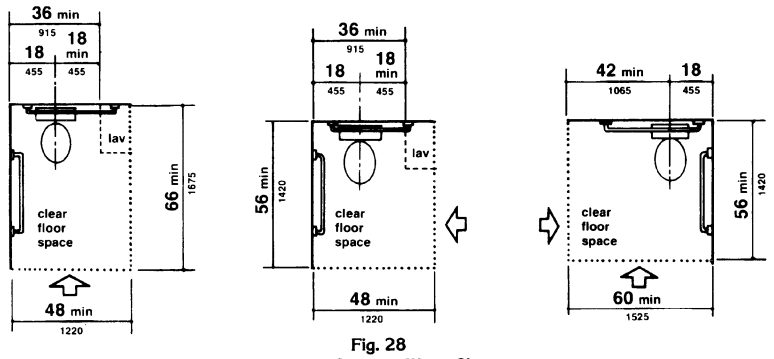

Fig. 28
Clear Floor Space at Water Closets

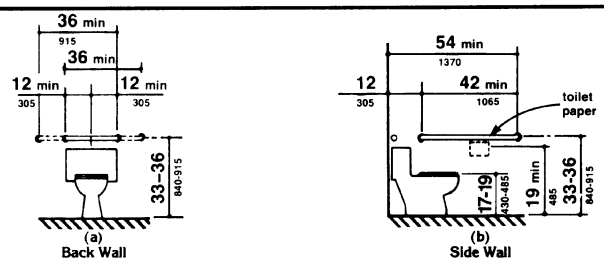

Fig. 29
Grab Bars at Water Closets

4.17.3* Size and Arrangement. The size and arrangement of the standard toilet stall shall comply with Fig. 30(a), *Standard Stall.* Standard toilet stalls with a minimum depth of 56 in (1420 mm) (see Fig. 30(a)) shall have wall-mounted water closets. If the depth of a standard toilet stall is increased at least 3 in (75 mm), then a floor-mounted water closet may be used. Arrangements shown for standard toilet stalls may be reversed to allow either a left- or right-hand approach. Additional stalls shall be provided in conformance with 4.22.4.

EXCEPTION: In instances of alteration work where provision of a standard stall (Fig. 30(a)) is technically infeasible or where plumbing code requirements prevent combining existing stalls to provide space, either alternate stall (Fig. 30(b)) may be provided in lieu of the standard stall.

4.17.4 Toe Clearances. In standard stalls, the front partition and at least one side partition shall provide a toe clearance of at least 9 in (230 mm) above the floor. If the depth of the stall is greater than 60 in (1525 mm), then the toe clearance is not required.

4.17.5* Doors. Toilet stall doors, *including door hardware,* shall comply with 4.13. *If toilet stall approach is from the latch side of the stall door, clearance between the door side of the*

4.17 Toilet Stalls

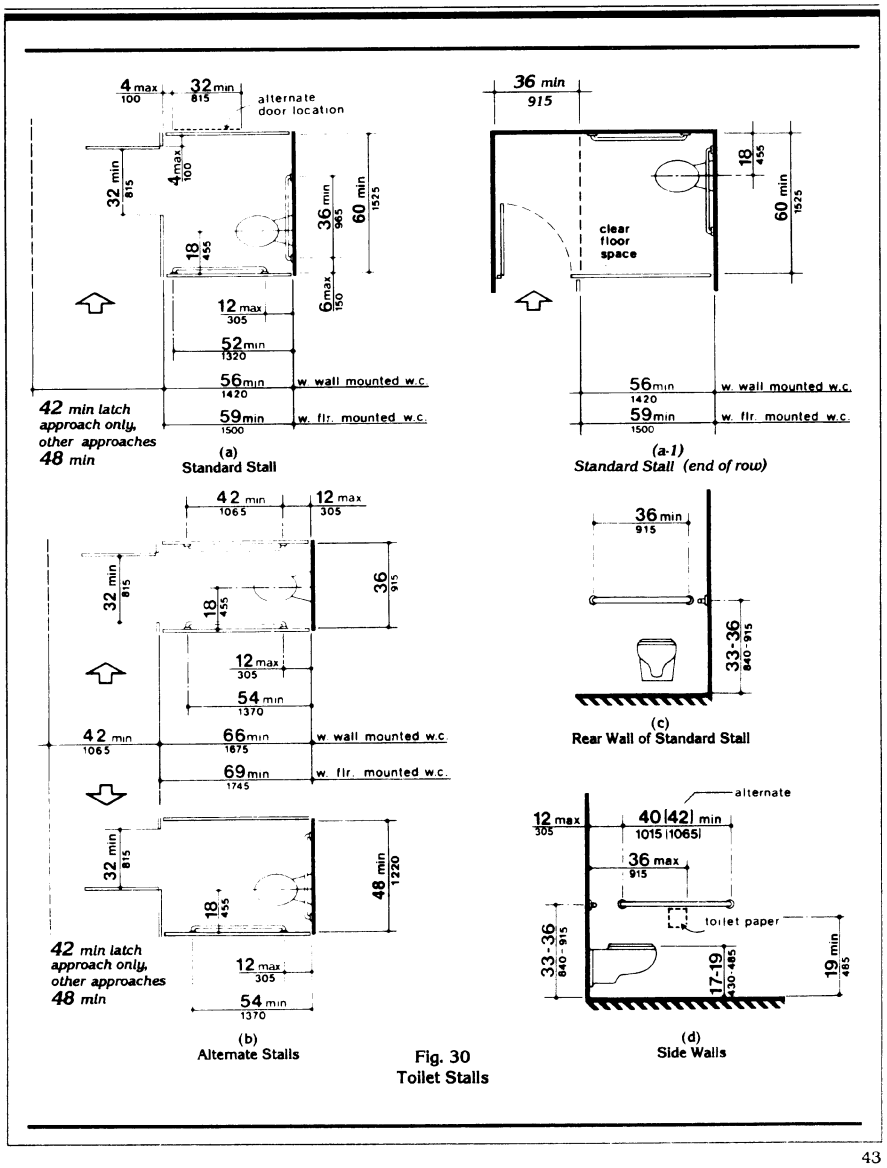

Fig. 30
Toilet Stalls

43

4.19 Lavatories and Mirrors

stall and any obstruction may be reduced to a minimum of 42 in (1065 mm) (Fig. 30).

4.17.6 Grab Bars. Grab bars complying with the length and positioning shown in Fig. 30(a), (b), (c), and (d) shall be provided. Grab bars may be mounted with any desired method as long as they have a gripping surface at the locations shown and do not obstruct the required clear floor area. Grab bars shall comply with 4.26.

4.18 Urinals.

4.18.1 General. Accessible urinals shall comply with 4.18.

4.18.2 Height. Urinals shall be stall-type or wall-hung with an elongated rim at a maximum of 17 in (430 mm) above the finish floor.

4.18.3 Clear Floor Space. A clear floor space 30 in by 48 in (760 mm by 1220 mm) shall be provided in front of urinals to allow forward approach. This clear space shall adjoin or overlap an accessible route and shall comply with 4.2.4. *Urinal shields that do not extend beyond the front edge of the urinal rim may be provided with 29 in (735 mm) clearance between them.*

4.18.4 Flush Controls. Flush controls shall be hand operated or automatic, and shall comply with 4.27.4, and shall be mounted no more than 44 in (1120 mm) above the finish floor.

4.19 Lavatories and Mirrors.

4.19.1 General. The requirements of 4.19 shall apply to lavatory fixtures, vanities, and built-in lavatories.

4.19.2 Height and Clearances. Lavatories shall be mounted with *the rim or counter surface no higher than 34 in (865 mm) above the finish floor.* Provide a clearance of at least 29 in (735 mm) above the finish floor to the bottom of the apron. Knee and toe clearance shall comply with Fig. 31.

4.19.3 Clear Floor Space. A clear floor space 30 in by 48 in (760 mm by 1220 mm) complying with 4.2.4 shall be provided in front of a lavatory to allow forward approach. Such clear floor space shall adjoin or overlap an accessible route and shall extend a maximum of 19 in (485 mm) underneath the lavatory (see Fig. 32).

4.19.4 Exposed Pipes and Surfaces. Hot water and drain pipes under lavatories shall be insulated or otherwise *configured to protect against contact.* There shall be no sharp or abrasive surfaces under lavatories.

4.19.5 Faucets. Faucets shall comply with 4.27.4. Lever-operated, push-type, and electronically controlled mechanisms are examples of acceptable designs. *If* self-closing valves are

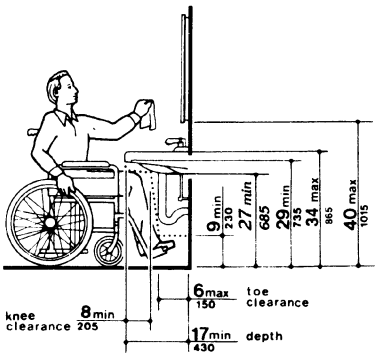

Fig. 31
Lavatory Clearances

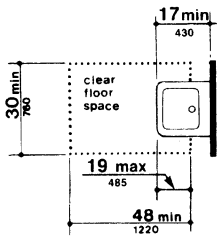

Fig. 32
Clear Floor Space at Lavatories

used the faucet *shall remain* open for at least 10 seconds.

4.19.6* Mirrors. Mirrors shall be mounted with the bottom edge *of the reflecting surface* no higher than 40 in (1015 mm) *above the finish* floor (see Fig. 31).

4.20 Bathtubs.

4.20.1 General. Accessible bathtubs shall comply with 4.20.

4.20.2 Floor Space. Clear floor space in front of bathtubs shall be as shown in Fig. 33.

4.20.3 Seat. An in-tub seat or a seat at the head end of the tub shall be provided as shown in Fig. 33 and 34. The structural strength of seats and their attachments shall comply with 4.26.3. Seats shall be mounted securely and shall not slip during use.

4.20.4 Grab Bars. Grab bars complying with 4.26 shall be provided as shown in Fig. 33 and 34.

4.20.5 Controls. Faucets and other controls complying with 4.27.4 shall be located as shown in Fig. 34.

4.20.6 Shower Unit. A shower spray unit with a hose at least 60 in (1525 mm) long that can be used *both* as a fixed shower head *and* as a hand-held shower shall be provided.

4.20.7 Bathtub Enclosures. If provided, enclosures for bathtubs shall not obstruct controls or transfer from wheelchairs onto bathtub seats or into tubs. Enclosures on bathtubs shall not have tracks mounted on their rims.

4.21 Shower Stalls.

4.21.1* General. Accessible shower stalls shall comply with 4.21.

4.21.2 Size and Clearances. Except as specified in 9.1.2, shower stall size and clear floor space shall comply with Fig. 35(a) or (b). The shower stall in Fig. 35(a) shall be 36 in by 36 in (915 mm by 915 mm). Shower stalls required by 9.1.2 shall comply with Fig. 57(a) or (b). The shower stall in Fig. 35(b) will fit into the space required for a bathtub.

4.21.3 Seat. A seat shall be provided in shower stalls 36 in by 36 in (915 mm by 915 mm) and shall be as shown in Fig. 36. The seat shall be mounted 17 in to 19 in (430 mm to 485 mm) from the bathroom floor and shall extend the full depth of the stall. In a 36 in by 36 in (915 mm by 915 mm) shower stall, the seat shall be on the wall opposite the controls. *Where a fixed seat is provided in a 30 in by 60 in minimum (760 mm by 1525 mm) shower stall, it shall be a folding type and shall be mounted on the wall adjacent to the controls as shown in Fig. 57.* The structural strength of seats and their attachments shall comply with 4.26.3.

4.21.4 Grab Bars. Grab bars complying with 4.26 shall be provided as shown in Fig. 37.

4.21.5 Controls. Faucets and other controls complying with 4.27.4 shall be located as shown in Fig. 37. In shower stalls 36 in by 36 in (915 mm by 915 mm), all controls, faucets, and the shower unit shall be mounted on the side wall opposite the seat.

4.21.6 Shower Unit. A shower spray unit with a hose at least 60 in (1525 mm) long that can be used *both* as a fixed shower head *and* as a hand-held shower shall be provided.

EXCEPTION: In unmonitored facilities where vandalism is a consideration, a fixed shower head mounted at 48 in (1220 mm) above the shower floor may be used in lieu of a hand-held shower head.

4.21.7 Curbs. If provided, curbs in shower stalls 36 in by 36 in (915 mm by 915 mm) shall be no higher than *1/2 in (13 mm)*. Shower stalls that are 30 in by 60 in (760 mm by 1525 mm) minimum shall not have curbs.

4.21.8 Shower Enclosures. If provided, enclosures for shower stalls shall not obstruct controls or obstruct transfer from wheelchairs onto shower seats.

4.22 Toilet Rooms.

4.22.1 Minimum Number. *Toilet facilities required to be accessible by 4.1 shall comply*

4.21 Shower Stalls

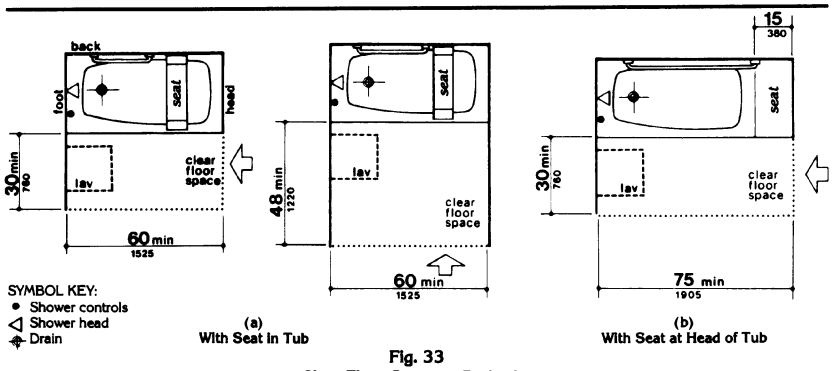

(a)
With Seat in Tub

(b)
With Seat at Head of Tub

Fig. 33
Clear Floor Space at Bathtubs

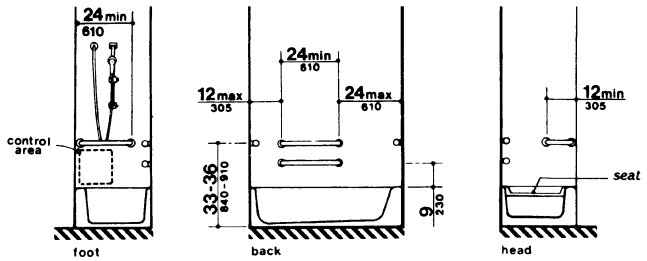

(a)
With Seat in Tub

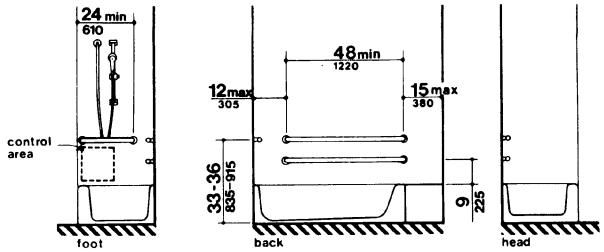

(b)
With Seat at Head of Tub

Fig. 34
Grab Bars at Bathtubs

4.22 Toilet Rooms

with 4.22. Accessible toilet rooms shall be on an accessible route.

4.22.2 Doors. All doors to accessible toilet rooms shall comply with 4.13. Doors shall not swing into the clear floor space required for any fixture.

4.22.3* Clear Floor Space. The accessible fixtures and controls required in 4.22.4, 4.22.5, 4.22.6, and 4.22.7 shall be on an accessible route. An unobstructed turning space complying with 4.2.3 shall be provided within an accessible toilet room. The clear floor space at fixtures and controls, the accessible route, and the turning space may overlap.

4.22.4 Water Closets. If toilet stalls are provided, then at least one shall be a standard toilet stall complying with 4.17; *where 6 or more stalls are provided, in addition to the stall complying with 4.17.3, at least one stall 36 in (915 mm) wide with an outward swinging, self-closing door and parallel grab bars complying with Fig. 30(d) and 4.26 shall be provided. Water closets in such stalls* shall comply with 4.16. If water closets are not in stalls, then at least one shall comply with 4.16.

4.22.5 Urinals. If urinals are provided, *then* at least one shall comply with 4.18.

4.22.6 Lavatories and Mirrors. If lavatories and mirrors are provided, *then* at least one of each shall comply with 4.19.

4.22.7 Controls and Dispensers. If controls, dispensers, receptacles, or other

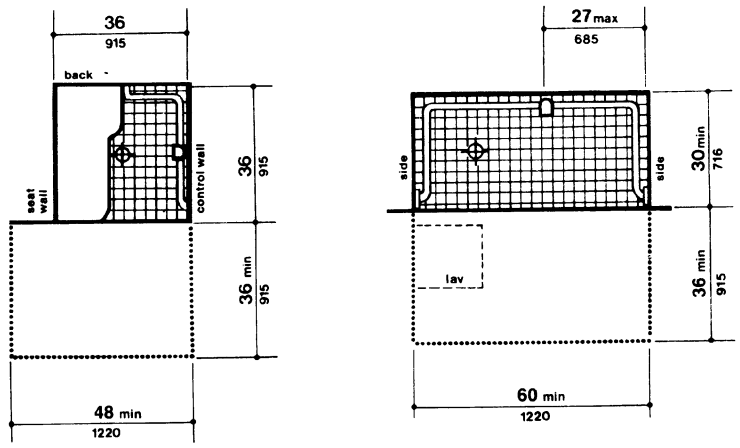

(a)
36-in by 36-in
(915-mm by 915-mm) Stall

(b)
30-in by 60-in
(760-mm by 1525-mm) Stall

Fig. 35
Shower Size and Clearances

4.23 Bathrooms, Bathing Facilities, and Shower Rooms

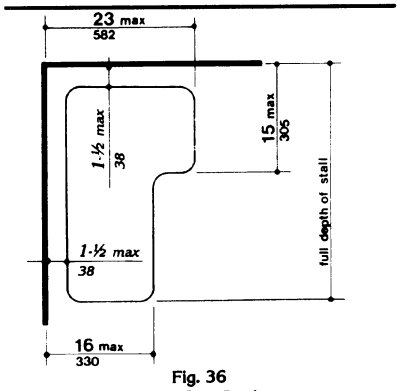

Fig. 36
Shower Seat Design

equipment are provided, *then* at least one of each shall be on an accessible route and shall comply with 4.27.

4.23 Bathrooms, Bathing Facilities, and Shower Rooms.

4.23.1 Minimum Number. Bathrooms, bathing facilities, or shower rooms *required to be accessible by 4.1* shall comply with 4.23 and shall be on an accessible route.

4.23.2 Doors. Doors to accessible bathrooms shall comply with 4.13. Doors shall not swing into the floor space required for any fixture.

4.23.3* Clear Floor Space. The accessible fixtures and controls required in 4.23.4, 4.23.5, 4.23.6, 4.23.7, 4.23.8, and 4.23.9 shall be on an accessible route. An unobstructed turning

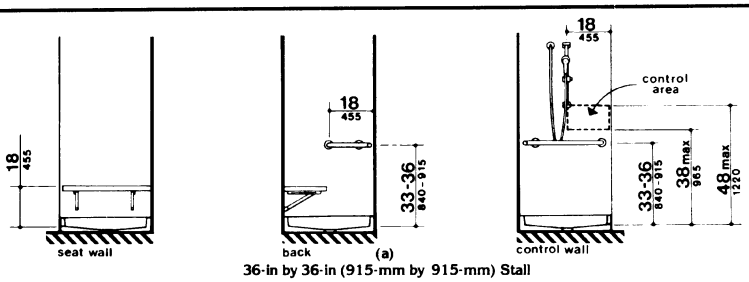

(a)
36-in by 36-in (915-mm by 915-mm) Stall

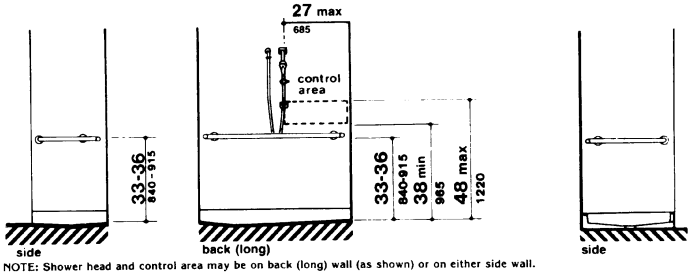

NOTE: Shower head and control area may be on back (long) wall (as shown) or on either side wall.

(b)
30-in by 60-in (760-mm by 1525-mm) Stall

Fig. 37
Grab Bars at Shower Stalls

space complying with 4.2.3 shall be provided within an accessible bathroom. The clear floor spaces at fixtures and controls, the accessible route, and the turning space may overlap.

4.23.4 Water Closets. If toilet stalls are provided, then at least one shall be a standard toilet stall complying with 4.17; *where 6 or more stalls are provided, in addition to the stall complying with 4.17.3, at least one stall 36 in (915 mm) wide with an outward swinging, self-closing door and parallel grab bars complying with Fig. 30(d) and 4.26 shall be provided. Water closets in such stalls* shall comply with 4.16. If water closets are not in stalls, then at least one shall comply with 4.16.

4.23.5 Urinals. If urinals are provided, then at least one shall comply with 4.18.

4.23.6 Lavatories and Mirrors. If lavatories and mirrors are provided, then at least one of each shall comply with 4.19.

4.23.7 Controls and Dispensers. If controls, dispensers, receptacles, or other equipment *are* provided, *then* at least one of each shall be on an accessible route and shall comply with 4.27.

4.23.8 Bathing and Shower Facilities. If tubs or showers are provided, then at least one accessible tub that complies with 4.20 or at least one accessible shower that complies with 4.21 shall be provided.

4.23.9* Medicine Cabinets. If medicine cabinets are provided, at least one shall be located with a usable shelf no higher than 44 in (1120 mm) above the floor space. The floor space shall comply with 4.2.4.

4.24 Sinks.

4.24.1 General. Sinks *required to be accessible by 4.1* shall comply with 4.24.

4.24.2 Height. Sinks shall be mounted with the counter or rim no higher than 34 in (865 mm) *above the finish* floor.

4.24.3 Knee Clearance. Knee clearance that is at least 27 in (685 mm) high, 30 in (760 mm) wide, and 19 in (485 mm) deep shall be provided underneath sinks.

4.24.4 Depth. Each sink shall be a maximum of 6-1/2 in (165 mm) deep.

4.24.5 Clear Floor Space. A clear floor space at least 30 in by 48 in (760 mm by 1220 mm) complying with 4.2.4 shall be provided in front of a sink to allow forward approach. The clear floor space shall be on an accessible route and shall extend a maximum of 19 in (485 mm) underneath the sink (see Fig. 32).

4.24.6 Exposed Pipes and Surfaces. Hot water and drain pipes exposed under sinks shall be insulated or otherwise *configured so as to protect against contact.* There shall be no sharp or abrasive surfaces under sinks.

4.24.7 Faucets. Faucets shall comply with 4.27.4. Lever-operated, push-type, touch-type, or electronically controlled mechanisms are acceptable designs.

4.25 Storage.

4.25.1 General. *Fixed* storage facilities such as cabinets, shelves, closets, and drawers *required to be accessible by 4.1* shall comply with 4.25.

4.25.2 Clear Floor Space. A clear floor space at least 30 in by 48 in (760 mm by 1220 mm) complying with 4.2.4 that allows either a forward or parallel approach by a person using a wheelchair shall be provided at accessible storage facilities.

4.25.3 Height. Accessible storage spaces shall be within at least one of the reach ranges specified in 4.2.5 and 4.2.6 *(see Fig. 5 and Fig. 6).* Clothes rods or shelves shall be a maximum of 54 in (1370 mm) *above the finish* floor *for a side approach. Where the distance from the wheelchair to the clothes rod or shelf exceeds 10 in (255 mm) (as in closets without accessible doors) the height and depth to the rod or shelf shall comply with Fig. 38(a) and Fig. 38(b).*

4.25.4 Hardware. Hardware for accessible storage facilities shall comply with 4.27.4. Touch latches and U-shaped pulls are acceptable.

4.26 Handrails, Grab Bars, and Tub and Shower Seats

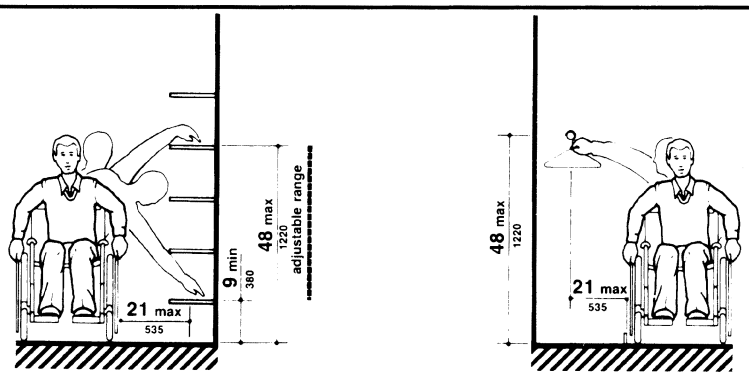

(a) Shelves (b) Closets

Fig. 38
Storage Shelves and Closets

4.26 Handrails, Grab Bars, and Tub and Shower Seats.

4.26.1* General. All handrails, grab bars, and tub and shower seats *required to be accessible by 4.1, 4.8, 4.9, 4.16, 4.17, 4.20 or 4.21* shall comply with 4.26.

4.26.2* Size and Spacing of Grab Bars and Handrails. The diameter or width of the gripping surfaces of a handrail or grab bar shall be 1-1/4 in to 1-1/2 in (32 mm to 38 mm), or the shape shall provide an equivalent gripping surface. If handrails or grab bars are mounted adjacent to a wall, the space between the wall and the grab bar shall be 1-1/2 in (38 mm) (see Fig. 39(a), (b), (c), and *(e)*). Handrails may be located in a recess if the recess is a maximum of 3 in (75 mm) deep and extends at least 18 in (455 mm) above the top of the rail (see Fig. 39(d)).

4.26.3 Structural Strength. The structural strength of grab bars, tub and shower seats, fasteners, and mounting devices shall meet the following specification:

(1) Bending stress in a grab bar or seat induced by the maximum bending moment from the application of 250 lbf (1112N) shall be less than the allowable stress for the material of the grab bar or seat.

(2) Shear stress induced in a grab bar or seat by the application of 250 lbf (1112N) shall be less than the allowable shear stress for the material of the grab bar or seat. If the connection between the grab bar or seat and its mounting bracket or other support is considered to be fully restrained, then direct and torsional shear stresses shall be totaled for the combined shear stress, which shall not exceed the allowable shear stress.

(3) Shear force induced in a fastener or mounting device from the application of 250 lbf (1112N) shall be less than the allowable lateral load of either the fastener or mounting device or the supporting structure, whichever is the smaller allowable load.

(4) Tensile force induced in a fastener by a direct tension force of 250 lbf (1112N) plus the maximum moment from the application of 250 lbf (1112N) shall be less than the allowable withdrawal load between the fastener and the supporting structure.

(5) Grab bars shall not rotate within their fittings.

4.26 Handrails, Grab Bars, and Tub and Shower Seats

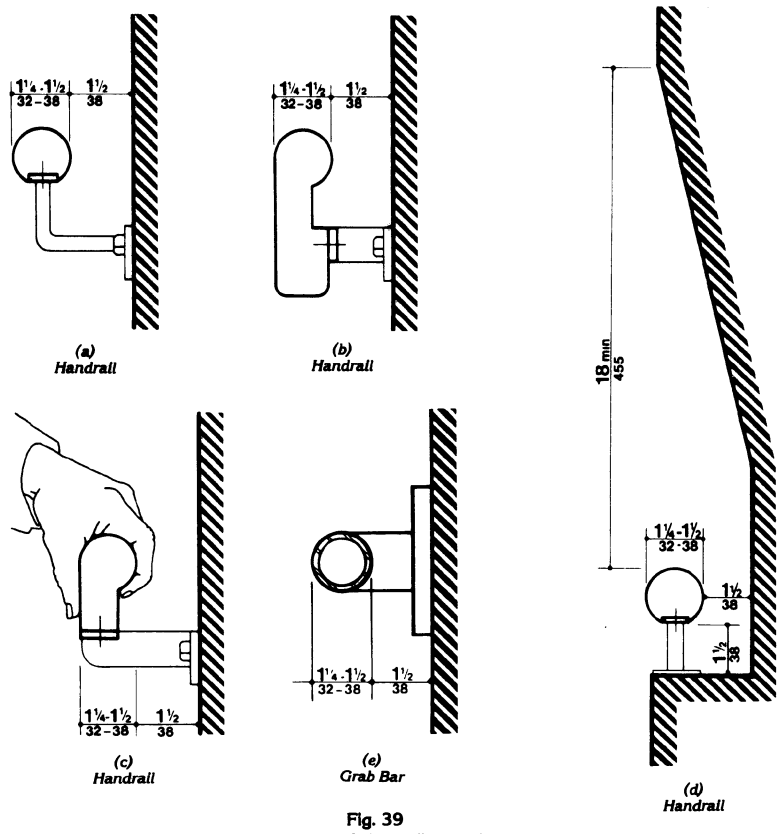

Fig. 39
Size and Spacing of Handrails and Grab Bars

4.26.4 Eliminating Hazards. A handrail or grab bar and any wall or other surface adjacent to it shall be free of any sharp or abrasive elements. Edges shall have a minimum radius of 1/8 in (3.2 mm).

4.27 Controls and Operating Mechanisms.

4.27.1 General. Controls and operating mechanisms *required to be accessible by 4.1* shall comply with 4.27.

4.27.2 Clear Floor Space. Clear floor space complying with 4.2.4 that allows a forward or a parallel approach by a person using a wheelchair shall be provided at controls, dispensers, receptacles, and other operable equipment.

4.27.3* Height. The highest operable part of controls, dispensers, receptacles, and other operable equipment shall be placed within at least one of the reach ranges specified in 4.2.5 and 4.2.6. Electrical and communications system receptacles on walls shall be mounted no less than 15 in (380 mm) above the floor.

EXCEPTION: These requirements do not apply where the use of special equipment dictates otherwise or where electrical and communications systems receptacles are not normally intended for use by building occupants.

4.27.4 Operation. Controls and operating mechanisms shall be operable with one hand and shall not require tight grasping, pinching, or twisting of the wrist. The force required to activate controls shall be no greater than 5 lbf (22.2 N).

4.28 Alarms.

4.28.1 General. *Alarm systems required to be accessible by 4.1 shall comply with 4.28. At a minimum, visual signal appliances shall be provided in buildings and facilities in each of the following areas: restrooms and any other general usage areas (e.g., meeting rooms), hallways, lobbies, and any other area for common use.*

4.28.2* Audible Alarms. If provided, audible emergency alarms shall produce a sound that exceeds the prevailing equivalent sound level in the room or space by at least 15 *dbA* or exceeds any maximum sound level with a duration of 60 seconds by 5 *dbA*, whichever is louder. Sound levels for alarm signals shall not exceed 120 *dbA*.

4.28.3* Visual Alarms. *Visual alarm signal appliances shall be integrated into the building or facility alarm system. If single station audible alarms are provided then single station visual alarm signals shall be provided. Visual alarm signals shall have the following minimum photometric and location features:*

(1) The lamp shall be a xenon strobe type or equivalent.

(2) The color shall be clear or nominal white (i.e., unfiltered or clear filtered white light).

(3) The maximum pulse duration shall be two-tenths of one second (0.2 sec) with a maximum duty cycle of 40 percent. The pulse duration is defined as the time interval between initial and final points of 10 percent of maximum signal.

(4) The intensity shall be a minimum of 75 candela.

(5) The flash rate shall be a minimum of 1 Hz and a maximum of 3 Hz.

(6) The appliance shall be placed 80 in (2030 mm) above the highest floor level within the space or 6 in (152 mm) below the ceiling, whichever is lower.

(7) In general, no place in any room or space required to have a visual signal appliance shall be more than 50 ft (15 m) from the signal (in the horizontal plane). In large rooms and spaces exceeding 100 ft (30 m) across, without obstructions 6 ft (2 m) above the finish floor, such as auditoriums, devices may be placed around the perimeter, spaced a maximum 100 ft (30 m) apart, in lieu of suspending appliances from the ceiling.

(8) No place in common corridors or hallways in which visual alarm signalling appliances are required shall be more than 50 ft (15 m) from the signal.

4.28.4* Auxiliary Alarms. *Units and* sleeping accommodations shall have a visual alarm connected to the building emergency alarm system or shall have a standard 110-volt electrical receptacle into which such an alarm can be connected *and a means by which a signal from the building emergency alarm system can trigger such an auxiliary alarm. When visual alarms are in place the signal shall be visible in all areas of the unit or room.* Instructions for use of the auxiliary alarm or receptacle shall be provided.

4.29 *Detectable* Warnings.

4.29.1 General. *Detectable* warnings *required by 4.1 and 4.7* shall comply with 4.29.

4.29.2* *Detectable* Warnings on Walking Surfaces. *Detectable* warnings shall consist of *raised truncated domes with a diameter of nominal 0.9 in (23 mm), a height of nominal 0.2 in (5 mm) and a center-to-center spacing of nominal 2.35 in (60 mm) and* shall contrast *visually* with *adjoining surfaces, either light-on-dark, or dark-on-light.*

The material used to provide contrast shall be an integral part of the walking surface. Detectable warnings used on interior surfaces shall differ from adjoining walking surfaces in resiliency or sound-on-cane contact.

4.29.3 *Detectable* Warnings on Doors To Hazardous Areas. *(Reserved).*

4.29.4 *Detectable* Warnings at Stairs. *(Reserved).*

4.29.5 *Detectable* Warnings at Hazardous Vehicular Areas. If a walk crosses or adjoins a vehicular way, *and the walking surfaces are not separated by* curbs, railings, or other elements *between the pedestrian areas and vehicular areas*, the boundary between the areas shall be defined by a continuous *detectable* warning *which is* 36 in (915 mm) wide, complying with 4.29.2.

4.29.6 *Detectable* Warnings at Reflecting Pools. The edges of reflecting pools shall be protected by railings, walls, curbs, or *detectable* warnings complying with 4.29.2.

4.29.7 Standardization. *(Reserved).*

4.30 Signage.

4.30.1* General. Signage *required to be accessible by 4.1 shall comply with the applicable provisions of 4.30.*

4.30.2* Character Proportion. Letters and numbers on signs shall have a width-to-height ratio between 3:5 and 1:1 and a stroke-width-to-height ratio between 1:5 and 1:10.

4.30.3 *Character Height.* *Characters and numbers on signs shall be sized according to the viewing distance from which they are to be read. The minimum height is measured using an upper case X. Lower case characters are permitted.*

Height Above Finished Floor	*Minimum Character Height*
Suspended or Projected Overhead in compliance with 4.4.2	*3 in. (75 mm) minimum*

4.30.4* Raised *and Brailled* Characters *and Pictorial Symbol Signs (Pictograms).* Letters and numerals shall be raised 1/32 in, *upper case*, sans serif *or simple serif type and shall be accompanied with Grade 2 Braille.* Raised characters shall be at least 5/8 in (16 mm) high, but no higher than 2 in (50 mm). *Pictograms shall be accompanied by the equivalent verbal description placed directly below the pictogram. The border dimension of the pictogram shall be 6 in (152 mm) minimum in height.*

4.30.5* *Finish and Contrast.* *The characters and background of signs shall be eggshell, matte, or other non-glare finish.* Characters and symbols shall contrast with their background — either light characters on a dark background or dark characters on a light background.

4.30.6 *Mounting Location and Height.* *Where permanent identification is provided for rooms and spaces, signs shall be installed on the wall adjacent to the latch side of the door. Where there is no wall space to the latch side of the door, including at double leaf doors, signs shall be placed on the nearest adjacent wall. Mounting height shall be 60 in (1525 mm) above the finish floor to the centerline of the sign. Mounting location for such signage shall be so that a person may approach within 3 in (76 mm) of signage without encountering protruding objects or standing within the swing of a door.*

4.30.7* Symbols of Accessibility.

(1) Facilities and elements required to be identified as accessible by 4.1 shall use the international symbol of accessibility. The

4.30 Signage

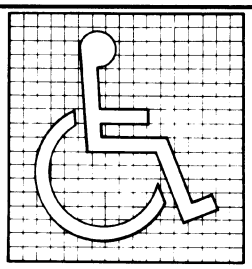

(a)
Proportions
International Symbol of Accessibility

(b)
Display Conditions
International Symbol of Accessibility

(c)
International TDD Symbol

(d)
International Symbol of Access for Hearing Loss

Fig. 43
International Symbols

symbol shall be displayed as shown in Fig. 43*(a) and (b)*.

(2) Volume Control Telephones. Telephones required to have a volume control by 4.1.3(17)(b) shall be identified by a sign containing a depiction of a telephone handset with radiating sound waves.

(3) Text Telephones. Text telephones required by 4.1.3 (17)(c) shall be identified by the international TDD symbol (Fig 43(c)). In addition, if a facility has a public text telephone, directional signage indicating the location of the nearest text telephone shall be placed adjacent to all banks of telephones which do not contain a text telephone. Such directional signage shall include the international TDD symbol. If a facility has no banks of telephones, the directional signage shall be provided at the entrance (e.g., in a building directory).

(4) Assistive Listening Systems. In assembly areas where permanently installed assistive listening systems are required by 4.1.3(19)(b) the availability of such systems shall be identified with signage that includes the international symbol of access for hearing loss (Fig 43(d)).

4.30.8* Illumination Levels. *(Reserved).*

4.31 Telephones.

4.31.1 General. Public telephones *required to be accessible by 4.1* shall comply with 4.31.

4.31.2 Clear Floor or Ground Space. A clear floor or ground space at least 30 in by 48 in (760 mm by 1220 mm) that allows either a forward or parallel approach by a person using a wheelchair shall be provided at telephones (see Fig. 44). The clear floor or ground space shall comply with 4.2.4. Bases, enclosures, and fixed seats shall not impede approaches to telephones by people who use wheelchairs.

4.31.3* Mounting Height. The highest operable part of the telephone shall be within the reach ranges specified in 4.2.5 or 4.2.6.

4.31.4 ***Protruding Objects.*** *Telephones shall comply with 4.4.*

4.31 Telephones

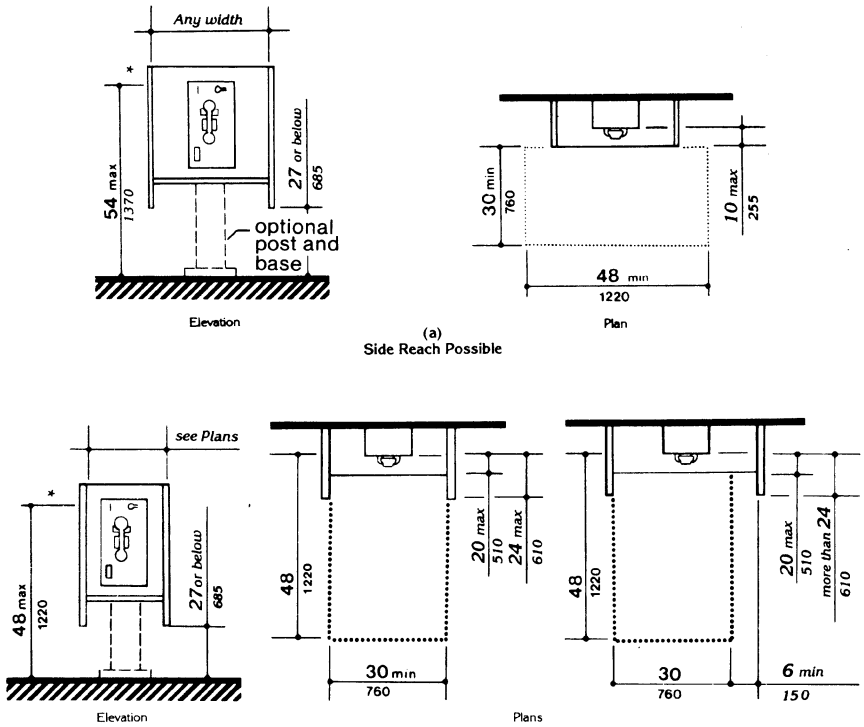

*Height to highest operable parts which are essential to basic operation of telephone.

Fig. 44
Mounting Heights and Clearances for Telephones

4.31.5 *Hearing Aid Compatible and Volume Control Telephones Required by 4.1.*

(1) Telephones shall be hearing aid compatible.

(2) Volume controls, *capable of a minimum of 12 dbA and a maximum of 18 dbA above normal, shall be provided in accordance with 4.1.3. If an automatic reset is provided then 18 dbA may be exceeded.*

4.31.6 Controls. Telephones shall have pushbutton controls where service for such equipment is available.

4.31.7 Telephone Books. Telephone books, if provided, shall be located *in a position that complies with the reach ranges specified in 4.2.5 and 4.2.6.*

4.31.8 Cord Length. The cord from the telephone to the handset shall be at least 29 in (735 mm) long.

4.31.9* Text Telephones Required by 4.1.

(1) Text telephones used with a pay telephone shall be permanently affixed within, or adjacent to, the telephone enclosure. If an acoustic coupler is used, the telephone cord shall be sufficiently long to allow connection of the text telephone and the telephone receiver.

(2) Pay telephones designed to accommodate a portable text telephone shall be equipped with a shelf and an electrical outlet within or adjacent to the telephone enclosure. The telephone handset shall be capable of being placed flush on the surface of the shelf. The shelf shall be capable of accommodating a text telephone and shall have 6 in (152 mm) minimum vertical clearance in the area where the text telephone is to be placed.

(3) Equivalent facilitation may be provided. For example, a portable text telephone may be made available in a hotel at the registration desk if it is available on a 24-hour basis for use with nearby public pay telephones. In this instance, at least one pay telephone shall comply with paragraph 2 of this section. In addition, if an acoustic coupler is used, the telephone handset cord shall be sufficiently long so as to allow connection of the text telephone and the telephone receiver. Directional signage shall be provided and shall comply with 4.30.7.

4.32 *Fixed or Built-in* Seating and Tables.

4.32.1 Minimum Number. Fixed or built-in seating or tables *required to be accessible by 4.1* shall comply with 4.32.

4.32.2 Seating. If seating spaces for people in wheelchairs are provided at *fixed* tables or counters, clear floor space complying with 4.2.4 shall be provided. Such clear floor space shall not overlap knee space by more than 19 in (485 mm) (see Fig. 45).

4.32.3 Knee Clearances. If seating for people in wheelchairs is provided at tables *or* counters, knee spaces at least 27 in (685 mm) high, 30 in (760 mm) wide, and 19 in (485 mm) deep shall be provided (see Fig. 45).

4.32.4* Height of Tables or Counters. The tops of *accessible* tables and *counters* shall be from 28 in to 34 in (710 mm to 865 mm) *above the finish* floor or ground.

4.33 Assembly Areas.

4.33.1 Minimum Number. Assembly *and associated* areas *required to be accessible by 4.1 shall comply with 4.33.*

4.33.2* Size of Wheelchair Locations. Each wheelchair location shall provide minimum clear ground or floor spaces as shown in Fig. 46.

4.33.3* Placement of Wheelchair Locations. Wheelchair areas shall be an integral part of any fixed seating plan and shall be *provided so as to provide people with physical disabilities a choice of admission prices and lines of sight comparable to those for members of the general public.* They shall adjoin an accessible route that also serves as a means of egress in case of emergency. *At least one companion fixed seat shall be provided next to each wheelchair seating area. When the seating capacity exceeds 300, wheelchair spaces shall be provided in more than one location. Readily removable seats may be installed in wheelchair spaces when the spaces are not required to accommodate wheelchair users.*

EXCEPTION: Accessible viewing positions may be clustered for bleachers, balconies, and other areas having sight lines that require slopes of greater than 5 percent. Equivalent accessible viewing positions may be located on levels having accessible egress.

4.33.4 Surfaces. The ground or floor at wheelchair locations shall be level and shall comply with 4.5.

4.33 Assembly Areas

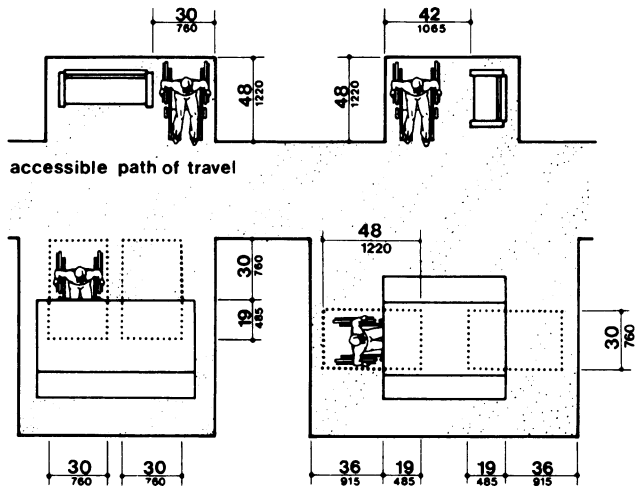

Fig. 45
Minimum Clearances for Seating and Tables

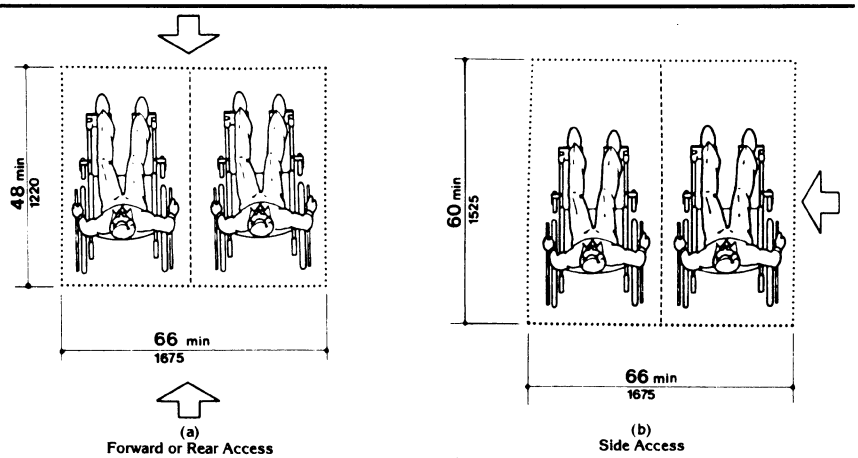

Fig. 46
Space Requirements for Wheelchair
Seating Spaces in Series

4.33.5 Access to Performing Areas

4.33.5 Access to Performing Areas. An accessible route shall connect wheelchair seating locations with performing areas, including stages, arena floors, dressing rooms, locker rooms, and other spaces used by performers.

4.33.6* Placement of Listening Systems. If the listening system provided serves individual fixed seats, then such seats shall be located within a 50 ft (15 m) viewing distance of the stage or playing area and shall have a complete view of the stage or playing area.

4.33.7* Types of Listening Systems. *Assistive listening systems (ALS) are intended to augment standard public address and audio systems by providing signals which can be received directly by persons with special receivers or their own hearing aids and which eliminate or filter background noise. The type of assistive listening system appropriate for a particular application depends on the characteristics of the setting, the nature of the program, and the intended audience. Magnetic induction loops, infra-red and radio frequency systems are types of listening systems which are appropriate for various applications.*

4.34 Automated Teller Machines.

4.34.1 General. *Each automated teller machine required to be accessible by 4.1.3 shall be on an accessible route and shall comply with 4.34.*

4.34.2 Clear Floor Space. *The automated teller machine shall be located so that clear floor space complying with 4.2.4 is provided to allow a person using a wheelchair to make a forward approach, a parallel approach, or both, to the machine.*

4.34.3 Reach Ranges.

(1) Forward Approach Only. If only a forward approach is possible, operable parts of all controls shall be placed within the forward reach range specified in 4.2.5.

(2) Parallel Approach Only. If only a parallel approach is possible, operable parts of controls shall be placed as follows:

(a) Reach Depth Not More Than 10 in (255 mm). Where the reach depth to the operable parts of all controls as measured from the vertical plane perpendicular to the edge of the unobstructed clear floor space at the farthest protrusion of the automated teller machine or surround is not more than 10 in (255 mm), the maximum height above the finished floor or grade shall be 54 in (1370 mm).

(b) Reach Depth More Than 10 in (255 mm). Where the reach depth to the operable parts of any control as measured from the vertical plane perpendicular to the edge of the unobstructed clear floor space at the farthest protrusion of the automated teller machine or surround is more than 10 in (255 mm), the maximum height above the finished floor or grade shall be as follows:

Reach Depth		***Maximum Height***	
In	*Mm*	*In*	*Mm*
10	*255*	*54*	*1370*
11	*280*	*53½*	*1360*
12	*305*	*53*	*1345*
13	*330*	*52½*	*1335*
14	*355*	*51½*	*1310*
15	*380*	*51*	*1295*
16	*405*	*50½*	*1285*
17	*430*	*50*	*1270*
18	*455*	*49½*	*1255*
19	*485*	*49*	*1245*
20	*510*	*48½*	*1230*
21	*535*	*47½*	*1205*
22	*560*	*47*	*1195*
23	*585*	*46½*	*1180*
24	*610*	*46*	*1170*

(3) Forward and Parallel Approach. If both a forward and parallel approach are possible, operable parts of controls shall be placed within at least one of the reach ranges in paragraphs (1) or (2) of this section.

(4) Bins. Where bins are provided for envelopes, waste paper, or other purposes, at least one of each type provided shall comply with the applicable reach ranges in paragraph (1), (2), or (3) of this section.

EXCEPTION: Where a function can be performed in a substantially equivalent manner by using an alternate control, only one of the controls needed to perform that function is required to comply with this section. If the controls are identified by tactile markings, such markings shall be provided on both controls.

4.34.4 Controls. *Controls for user activation shall comply with 4.27.4.*

4.34.5 Equipment for Persons with Vision Impairments. *Instructions and all information for use shall be made accessible to and independently usable by persons with vision impairments.*

4.35 Dressing and Fitting Rooms.

4.35.1 General. *Dressing and fitting rooms required to be accessible by 4.1 shall comply with 4.35 and shall be on an accessible route.*

4.35.2 Clear Floor Space. *A clear floor space allowing a person using a wheelchair to make a 180-degree turn shall be provided in every accessible dressing room entered through a swinging or sliding door. No door shall swing into any part of the turning space. Turning space shall not be required in a private dressing room entered through a curtained opening at least 32 in (815 mm) wide if clear floor space complying with section 4.2 renders the dressing room usable by a person using a wheelchair.*

4.35.3 Doors. *All doors to accessible dressing rooms shall be in compliance with section 4.13.*

4.35.4 Bench. *Every accessible dressing room shall have a 24 in by 48 in (610 mm by 1220 mm) bench fixed to the wall along the longer dimension. The bench shall be mounted 17 in to 19 in (430 mm to 485 mm) above the finish floor. Clear floor space shall be provided alongside the bench to allow a person using a wheelchair to make a parallel transfer onto the bench. The structural strength of the bench and attachments shall comply with 4.26.3. Where installed in conjunction with showers, swimming pools, or other wet locations, water shall not accumulate upon the surface of the bench and the bench shall have a slip-resistant surface.*

4.35.5 Mirror. *Where mirrors are provided in dressing rooms of the same use, then in an accessible dressing room, a full-length mirror, measuring at least 18 in wide by 54 in high (460 mm by 1370 mm), shall be mounted in a position affording a view to a person on the bench as well as to a person in a standing position.*

NOTE: Sections 4.1.1 through 4.1.7 and sections 5 through 10 are different from ANSI A117.1 in their entirety and are printed in standard type.

5. RESTAURANTS AND CAFETERIAS.

5.1* General. Except as specified or modified in this section, restaurants and cafeterias shall comply with the requirements of 4.1 to 4.35. Where fixed tables (or dining counters where food is consumed but there is no service) are provided, at least 5 percent, but not less than one, of the fixed tables (or a portion of the dining counter) shall be accessible and shall comply with 4.32 as required in 4.1.3(18). In establishments where separate areas are designated for smoking and non-smoking patrons, the required number of accessible fixed tables (or counters) shall be proportionally distributed between the smoking and non-smoking areas. In new construction, and where practicable in alterations, accessible fixed tables (or counters) shall be distributed throughout the space or facility.

5.2 Counters and Bars. Where food or drink is served at counters exceeding 34 in (865 mm) in height for consumption by customers seated on stools or standing at the counter, a portion of the main counter which is 60 in (1525 mm) in length minimum shall be provided in compliance with 4.32 or service shall be available at accessible tables within the same area.

5.3 Access Aisles. All accessible fixed tables shall be accessible by means of an access aisle at least 36 in (915 mm) clear between parallel edges of tables or between a wall and the table edges.

5.4 Dining Areas. In new construction, all dining areas, including raised or sunken dining areas, loggias, and outdoor seating areas, shall be accessible. In non-elevator buildings, an accessible means of vertical access to the mezzanine is not required under the following conditions: 1) the area of mezzanine seating measures no more than 33 percent of the area of the total accessible seating area; 2) the same services and decor are provided in an accessible space usable by the general public; and, 3) the accessible areas are not restricted to use by people with disabilities. In alterations, accessibility to raised or sunken dining areas, or to all parts of outdoor seating areas is not required provided that the same services and decor are provided in an accessible space usable by the general public and are not restricted to use by people with disabilities.

5.5 Food Service Lines. Food service lines shall have a minimum clear width of 36 in (915 mm), with a preferred clear width of 42 in (1065 mm) to allow passage around a person using a wheelchair. Tray slides shall be mounted no higher than 34 in (865 mm) above the floor (see Fig. 53). If self-service shelves

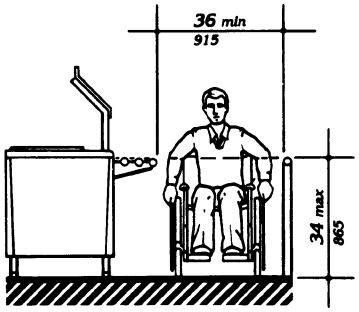

Fig. 53
Food Service Lines

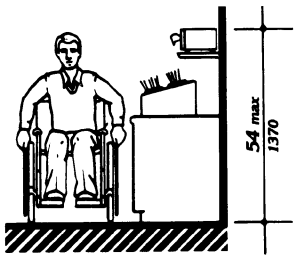

Fig. 54
Tableware Areas

6.0 Medical Care Facilities

are provided, at least 50 percent of each type must be within reach ranges specified in 4.2.5 and 4.2.6.

5.6 Tableware and Condiment Areas. Self-service shelves and dispensing devices for tableware, dishware, condiments, food and beverages shall be installed to comply with 4.2 (see Fig. 54).

5.7 Raised Platforms. In banquet rooms or spaces where a head table or speaker's lectern is located on a raised platform, the platform shall be accessible in compliance with 4.8 or 4.11. Open edges of a raised platform shall be protected by placement of tables or by a curb.

5.8 Vending Machines and Other Equipment. Spaces for vending machines and other equipment shall comply with 4.2 and shall be located on an accessible route.

5.9 Quiet Areas. (Reserved).

6. MEDICAL CARE FACILITIES.

6.1 General. Medical care facilities included in this section are those in which people receive physical or medical treatment or care and where persons may need assistance in responding to an emergency and where the period of stay may exceed twenty-four hours. In addition to the requirements of 4.1 through 4.35, medical care facilities and buildings shall comply with 6.

(1) Hospitals - general purpose hospitals, psychiatric facilities, detoxification facilities — At least 10 percent of patient bedrooms and toilets, and all public use and common use areas are required to be designed and constructed to be accessible.

(2) Hospitals and rehabilitation facilities that specialize in treating conditions that affect mobility, or units within either that specialize in treating conditions that affect mobility — All patient bedrooms and toilets, and all public use and common use areas are required to be designed and constructed to be accessible.

(3) Long term care facilities, nursing homes — At least 50 percent of patient bedrooms and toilets, and all public use and common use areas are required to be designed and constructed to be accessible.

(4) Alterations to patient bedrooms.

(a) When patient bedrooms are being added or altered as part of a planned renovation of an entire wing, a department, or other discrete area of an existing medical facility, a percentage of the patient bedrooms that are being added or altered shall comply with 6.3. The percentage of accessible rooms provided shall be consistent with the percentage of rooms required to be accessible by the applicable requirements of 6.1(1), 6.1(2), or 6.1(3), until the number of accessible patient bedrooms in the facility equals the overall number that would be required if the facility were newly constructed. (For example, if 20 patient bedrooms are being altered in the obstetrics department of a hospital, 2 of the altered rooms must be made accessible. If, within the same hospital, 20 patient bedrooms are being altered in a unit that specializes in treating mobility impairments, all of the altered rooms must be made accessible.) Where toilet/bath rooms are part of patient bedrooms which are added or altered and required to be accessible, each such patient toilet/bathroom shall comply with 6.4.

(b) When patient bedrooms are being added or altered individually, and not as part of an alteration of the entire area, the altered patient bedrooms shall comply with 6.3, unless either: a) the number of accessible rooms provided in the department or area containing the altered patient bedroom equals the number of accessible patient bedrooms that would be required if the percentage requirements of 6.1(1), 6.1(2), or 6.1(3) were applied to that department or area; or b) the number of accessible patient bedrooms in the facility equals the overall number that would be required if the facility were newly constructed. Where toilet/bathrooms are part of patient bedrooms which are added or altered and required to be accessible, each such toilet/bathroom shall comply with 6.4.

6.2 Entrances. At least one accessible entrance that complies with 4.14 shall be protected from the weather by canopy or roof overhang. Such entrances shall incorporate a passenger loading zone that complies with 4.6.6.

6.3 Patient Bedrooms. Provide accessible patient bedrooms in compliance with 4.1 through 4.35. Accessible patient bedrooms shall comply with the following:

(1) Each bedroom shall have a door that complies with 4.13.

EXCEPTION: Entry doors to acute care hospital bedrooms for in-patients shall be exempted from the requirement in 4.13.6 for maneuvering space at the latch side of the door if the door is at least 44 in (1120 mm) wide.

(2) Each bedroom shall have adequate space to provide a maneuvering space that complies with 4.2.3. In rooms with 2 beds, it is preferable that this space be located between beds.

(3) Each bedroom shall have adequate space to provide a minimum clear floor space of 36 in (915 mm) along each side of the bed and to provide an accessible route complying with 4.3.3 to each side of each bed.

6.4 Patient Toilet Rooms. Where toilet/bath rooms are provided as a part of a patient bedroom, each patient bedroom that is required to be accessible shall have an accessible toilet/bath room that complies with 4.22 or 4.23 and shall be on an accessible route.

7. BUSINESS AND MERCANTILE.

7.1 General. In addition to the requirements of 4.1 to 4.35, the design of all areas used for business transactions with the public shall comply with 7.

7.2 Sales and Service Counters, Teller Windows, Information Counters.

(1) In department stores and miscellaneous retail stores where counters have cash registers and are provided for sales or distribution of goods or services to the public, at least one of each type shall have a portion of the counter which is at least 36 in (915 mm) in length with a maximum height of 36 in (915 mm) above the finish floor. It shall be on an accessible route complying with 4.3. The accessible counters must be dispersed throughout the building or facility. In alterations where it is technically infeasible to provide an accessible counter, an auxiliary counter meeting these requirements may be provided.

(2) At ticketing counters, teller stations in a bank, registration counters in hotels and motels, box office ticket counters, and other counters that may not have a cash register but at which goods or services are sold or distributed, either:

(i) a portion of the main counter which is a minimum of 36 in (915 mm) in length shall be provided with a maximum height of 36 in (915 mm); or

(ii) an auxiliary counter with a maximum height of 36 in (915 mm) in close proximity to the main counter shall be provided; or

(iii) equivalent facilitation shall be provided (e.g., at a hotel registration counter, equivalent facilitation might consist of: (1) provision of a folding shelf attached to the main counter on which an individual with disabilities can write, and (2) use of the space on the side of the counter or at the concierge desk, for handing materials back and forth).

All accessible sales and service counters shall be on an accessible route complying with 4.3.

(3)* Assistive Listening Devices. (Reserved)

8.0 Libraries

7.3* Check-out Aisles.

(1) In new construction, accessible check-out aisles shall be provided in conformance with the table below:

Total Check-out Aisles of Each Design	Minimum Number of Accessible Check-out Aisles (of each design)
1 - 4	1
5 - 8	2
9 - 15	3
over 15	3, plus 20% of additional aisles

EXCEPTION: In new construction, where the selling space is under 5000 square feet, only one check-out aisle is required to be accessible.

EXCEPTION: In alterations, at least one check-out aisle shall be accessible in facilities under 5000 square feet of selling space. In facilities of 5000 or more square feet of selling space, at least one of each design of check-out aisle shall be made accessible when altered until the number of accessible check-out aisles of each design equals the number required in new construction.

Examples of check-out aisles of different "design" include those which are specifically designed to serve different functions. Different "design" includes but is not limited to the following features - length of belt or no belt; or permanent signage designating the aisle as an express lane.

(2) Clear aisle width for accessible check-out aisles shall comply with 4.2.1 and maximum adjoining counter height shall not exceed 38 in (965 mm) above the finish floor. The top of the lip shall not exceed 40 in (1015 mm) above the finish floor.

(3) Signage identifying accessible check-out aisles shall comply with 4.30.7 and shall be mounted above the check-out aisle in the same location where the check-out number or type of check-out is displayed.

7.4 Security Bollards. Any device used to prevent the removal of shopping carts from store premises shall not prevent access or egress to people in wheelchairs. An alternate entry that is equally convenient to that provided for the ambulatory population is acceptable.

8. LIBRARIES.

8.1 General. In addition to the requirements of 4.1 to 4.35, the design of all public areas of a library shall comply with 8, including reading and study areas, stacks, reference rooms, reserve areas, and special facilities or collections.

8.2 Reading and Study Areas. At least 5 percent or a minimum of one of each element of fixed seating, tables, or study carrels shall comply with 4.2 and 4.32. Clearances between fixed accessible tables and between study carrels shall comply with 4.3.

8.3 Check-Out Areas. At least one lane at each check-out area shall comply with 7.2(1). Any traffic control or book security gates or turnstiles shall comply with 4.13.

8.4 Card Catalogs and Magazine Displays. Minimum clear aisle space at card catalogs and magazine displays shall comply with Fig. 55. Maximum reach height shall comply with 4.2, with a height of 48 in (1220 mm) preferred irrespective of approach allowed.

8.5 Stacks. Minimum clear aisle width between stacks shall comply with 4.3, with a minimum clear aisle width of 42 in (1065 mm) preferred where possible. Shelf height in stack areas is unrestricted (see Fig. 56).

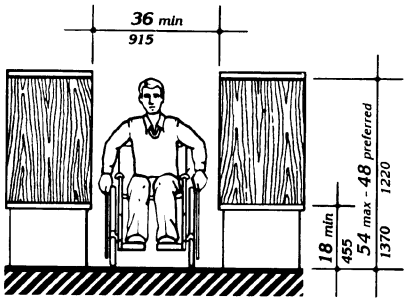

Fig. 55
Card Catalog

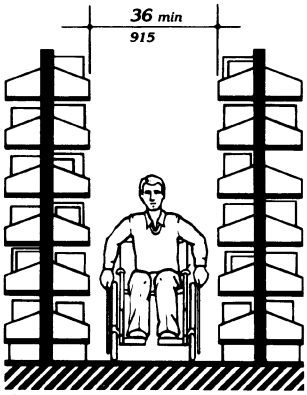

Fig. 56
Stacks

9. ACCESSIBLE TRANSIENT LODGING.

(1) Except as specified in the special technical provisions of this section, accessible transient lodging shall comply with the applicable requirements of 4.1 through 4.35. Transient lodging includes facilities or portions thereof used for sleeping accommodations, when not classed as a medical care facility.

9.1 Hotels, Motels, Inns, Boarding Houses, Dormitories, Resorts and Other Similar Places of Transient Lodging.

9.1.1 General. All public use and common use areas are required to be designed and constructed to comply with section 4 (Accessible Elements and Spaces: Scope and Technical Requirements).

EXCEPTION: Sections 9.1 through 9.4 do not apply to an establishment located within a building that contains not more than five rooms for rent or hire and that is actually occupied by the proprietor of such establishment as the residence of such proprietor.

9.1.2 Accessible Units, Sleeping Rooms, and Suites. Accessible sleeping rooms or suites that comply with the requirements of 9.2 (Requirements for Accessible Units, Sleeping Rooms, and Suites) shall be provided in conformance with the table below. In addition, in hotels, of 50 or more sleeping rooms or suites, additional accessible sleeping rooms or suites that include a roll-in shower shall also be provided in conformance with the table below. Such accommodations shall comply with the requirements of 9.2, 4.21, and Figure 57(a) or (b).

9.1.3 Sleeping Accommodations for Persons with Hearing Impairments

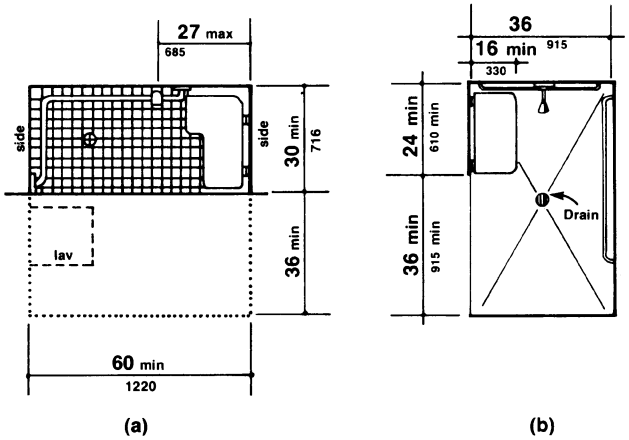

Fig. 57
Roll-in Shower with Folding Seat

Number of Rooms	Accessible Rooms	Rooms with Roll-in Showers
1 to 25	1	
26 to 50	2	
51 to 75	3	1
76 to 100	4	1
101 to 150	5	2
151 to 200	6	2
201 to 300	7	3
301 to 400	8	4
401 to 500	9	4 plus one for each additional 100 over 400
501 to 1000	2% of total	
1001 and over	20 plus 1 for each 100 over 1000	

9.1.3 Sleeping Accommodations for Persons with Hearing Impairments. In addition to those accessible sleeping rooms and suites required by 9.1.2, sleeping rooms and suites that comply with 9.3 (Visual Alarms, Notification Devices, and Telephones) shall be provided in conformance with the following table:

Number of Elements	Accessible Elements
1 to 25	1
26 to 50	2
51 to 75	3
76 to 100	4
101 to 150	5
151 to 200	6
201 to 300	7
301 to 400	8
401 to 500	9
501 to 1000	2% of total
1001 and over	20 plus 1 for each 100 over 1000

9.1.4 Classes of Sleeping Accommodations.

(1) In order to provide persons with disabilities a range of options equivalent to those available to other persons served by the facility, sleeping rooms and suites required to be accessible by 9.1.2 shall be dispersed among the various classes of sleeping accommodations available to patrons of the place of transient lodging. Factors to be considered include room size, cost, amenities provided, and the number of beds provided.

(2) Equivalent Facilitation. For purposes of this section, it shall be deemed equivalent facilitation if the operator of a facility elects to limit construction of accessible rooms to those intended for multiple occupancy, provided that such rooms are made available at the cost of a single-occupancy room to an individual with disabilities who requests a single-occupancy room.

9.1.5. Alterations to Accessible Units, Sleeping Rooms, and Suites. When sleeping rooms are being altered in an existing facility, or portion thereof, subject to the requirements of this section, at least one sleeping room or suite that complies with the requirements of 9.2 (Requirements for Accessible Units, Sleeping Rooms, and Suites) shall be provided for each 25 sleeping rooms, or fraction thereof, of rooms being altered until the number of such rooms provided equals the number required to be accessible with 9.1.2. In addition, at least one sleeping room or suite that complies with the requirements of 9.3 (Visual Alarms, Notification Devices, and Telephones) shall be provided for each 25 sleeping rooms, or fraction thereof, of rooms being altered until the number of such rooms equals the number required to be accessible by 9.1.3.

9.2 Requirements for Accessible Units, Sleeping Rooms and Suites.

9.2.1 General. Units, sleeping rooms, and suites required to be accessible by 9.1 shall comply with 9.2.

9.2.2 Minimum Requirements. An accessible unit, sleeping room or suite shall be on an accessible route complying with 4.3 and have the following accessible elements and spaces.

(1) Accessible sleeping rooms shall have a 36 in (915 mm) clear width maneuvering space located along both sides of a bed, except that where two beds are provided, this requirement can be met by providing a 36 in (915 mm) wide maneuvering space located between the two beds.

(2) An accessible route complying with 4.3 shall connect all accessible spaces and elements, including telephones, within the unit, sleeping room, or suite. This is not intended to require an elevator in multi-story units as long as the spaces identified in 9.2.2(6) and (7) are on accessible levels and the accessible sleeping area is suitable for dual occupancy.

(3) Doors and doorways designed to allow passage into and within all sleeping rooms, suites or other covered units shall comply with 4.13.

(4) If fixed or built-in storage facilities such as cabinets, shelves, closets, and drawers are provided in accessible spaces, at least one of each type provided shall contain storage space complying with 4.25. Additional storage may be provided outside of the dimensions required by 4.25.

(5) All controls in accessible units, sleeping rooms, and suites shall comply with 4.27.

(6) Where provided as part of an accessible unit, sleeping room, or suite, the following spaces shall be accessible and shall be on an accessible route:

(a) the living area.

(b) the dining area.

(c) at least one sleeping area.

(d) patios, terraces, or balconies.

EXCEPTION: The requirements of 4.13.8 and 4.3.8 do not apply where it is necessary to utilize a higher door threshold or a change in level to protect the integrity of the unit from wind/water damage. Where this exception results in patios, terraces or balconies that are not at an accessible level, equivalent facilitation

9.3 Visual Alarms, Notification Devices and Telephones

shall be provided. (E.g., equivalent facilitation at a hotel patio or balcony might consist of providing raised decking or a ramp to provide accessibility.)

(e) at least one full bathroom (i.e., one with a water closet, a lavatory, and a bathtub or shower).

(f) if only half baths are provided, at least one half bath.

(g) carports, garages or parking spaces.

(7) Kitchens, Kitchenettes, or Wet Bars. When provided as accessory to a sleeping room or suite, kitchens, kitchenettes, wet bars, or similar amenities shall be accessible. Clear floor space for a front or parallel approach to cabinets, counters, sinks, and appliances shall be provided to comply with 4.2.4. Countertops and sinks shall be mounted at a maximum height of 34 in (865 mm) above the floor. At least fifty percent of shelf space in cabinets or refrigerator/freezers shall be within the reach ranges of 4.2.5 or 4.2.6 and space shall be designed to allow for the operation of cabinet and/or appliance doors so that all cabinets and appliances are accessible and usable. Controls and operating mechanisms shall comply with 4.27.

(8) Sleeping room accommodations for persons with hearing impairments required by 9.1 and complying with 9.3 shall be provided in the accessible sleeping room or suite.

9.3 Visual Alarms, Notification Devices and Telephones.

9.3.1 General. In sleeping rooms required to comply with this section, auxiliary visual alarms shall be provided and shall comply with 4.28.4. Visual notification devices shall also be provided in units, sleeping rooms and suites to alert room occupants of incoming telephone calls and a door knock or bell. Notification devices shall not be connected to auxiliary visual alarm signal appliances. Permanently installed telephones shall have volume controls complying with 4.31.5; an accessible electrical outlet within 4 ft (1220 mm) of a telephone connection shall be provided to facilitate the use of a text telephone.

9.3.2 Equivalent Facilitation. For purposes of this section, equivalent facilitation shall include the installation of electrical outlets (including outlets connected to a facility's central alarm system) and telephone wiring in sleeping rooms and suites to enable persons with hearing impairments to utilize portable visual alarms and communication devices provided by the operator of the facility.

9.4 Other Sleeping Rooms and Suites.

Doors and doorways designed to allow passage into and within all sleeping units or other covered units shall comply with 4.13.5.

9.5 Transient Lodging in Homeless Shelters, Halfway Houses, Transient Group Homes, and Other Social Service Establishments.

9.5.1 New Construction. In new construction all public use and common use areas are required to be designed and constructed to comply with section 4. At least one of each type of amenity (such as washers, dryers and similar equipment installed for the use of occupants) in each common area shall be accessible and shall be located on an accessible route to any accessible unit or sleeping accommodation.

EXCEPTION: Where elevators are not provided as allowed in 4.1.3(5), accessible amenities are not required on inaccessible floors as long as one of each type is provided in common areas on accessible floors.

9.5.2 Alterations.

(1) Social service establishments which are not homeless shelters:

(a) The provisions of 9.5.3 and 9.1.5 shall apply to sleeping rooms and beds.

(b) Alteration of other areas shall be consistent with the new construction provisions of 9.5.1.

(2) Homeless shelters. If the following elements are altered, the following requirements apply:

(a) at least one public entrance shall allow a person with mobility impairments to approach, enter and exit including a minimum clear door width of 32 in (815 mm).

(b) sleeping space for homeless persons as provided in the scoping provisions of 9.1.2 shall include doors to the sleeping area with a minimum clear width of 32 in (815 mm) and maneuvering space around the beds for persons with mobility impairments complying with 9.2.2(1).

(c) at least one toilet room for each gender or one unisex toilet room shall have a minimum clear door width of 32 in (815 mm), minimum turning space complying with 4.2.3, one water closet complying with 4.16, one lavatory complying with 4.19 and the door shall have a privacy latch; and, if provided, at least one tub or shower shall comply with 4.20 or 4.21, respectively.

(d) at least one common area which a person with mobility impairments can approach, enter and exit including a minimum clear door width of 32 in (815 mm).

(e) at least one route connecting elements (a), (b), (c) and (d) which a person with mobility impairments can use including minimum clear width of 36 in (915 mm), passing space complying with 4.3.4, turning space complying with 4.2.3 and changes in levels complying with 4.3.8.

(f) homeless shelters can comply with the provisions of (a)-(e) by providing the above elements on one accessible floor.

9.5.3. Accessible Sleeping Accommodations in New Construction. Accessible sleeping rooms shall be provided in conformance with the table in 9.1.2 and shall comply with 9.2 Accessible Units, Sleeping Rooms and Suites (where the items are provided). Additional sleeping rooms that comply with 9.3 Sleeping Accommodations for Persons with Hearing Impairments shall be provided in conformance with the table provided in 9.1.3.

In facilities with multi-bed rooms or spaces, a percentage of the beds equal to the table provided in 9.1.2 shall comply with 9.2.2(1).

10. TRANSPORTATION FACILITIES.

10.1 General. Every station, bus stop, bus stop pad, terminal, building or other transportation facility, shall comply with the applicable provisions of 4.1 through 4.35, sections 5 through 9, and the applicable provisions of this section. The exceptions for elevators in 4.1.3(5), exception 1 and 4.1.6(1)(k) do not apply to a terminal, depot, or other station used for specified public transportation, or an airport passenger terminal, or facilities subject to Title II.

10.2 Bus Stops and Terminals.

10.2.1 New Construction.

(1) Where new bus stop pads are constructed at bus stops, bays or other areas where a lift or ramp is to be deployed, they shall have a firm, stable surface; a minimum clear length of 96 inches (measured from the curb or vehicle roadway edge) and a minimum clear width of 60 inches (measured parallel to the vehicle roadway) to the maximum extent allowed by legal or site constraints; and shall be connected to streets, sidewalks or pedestrian paths by an accessible route complying with 4.3 and 4.4. The slope of the pad parallel to the roadway shall, to the extent practicable, be the same as the roadway. For water drainage, a maximum slope of 1:50 (2%) perpendicular to the roadway is allowed.

(2) Where provided, new or replaced bus shelters shall be installed or positioned so as to permit a wheelchair or mobility aid user to enter from the public way and to reach a location, having a minimum clear floor area of 30 inches by 48 inches, entirely within the perimeter of the shelter. Such shelters shall be connected by an accessible route to the boarding area provided under paragraph (1) of this section.

(3) Where provided, all new bus route identification signs shall comply with 4.30.5. In addition, to the maximum extent practicable, all new bus route identification signs shall comply with 4.30.2 and 4.30.3. Signs

10.3 Fixed Facilities and Stations

that are sized to the maximum dimensions permitted under legitimate local, state or federal regulations or ordinances shall be considered in compliance with 4.30.2 and 4.30.3 for purposes of this section.

EXCEPTION: Bus schedules, timetables, or maps that are posted at the bus stop or bus bay are not required to comply with this provision.

10.2.2 Bus Stop Siting and Alterations.

(1) Bus stop sites shall be chosen such that, to the maximum extent practicable, the areas where lifts or ramps are to be deployed comply with section 10.2.1(1) and (2).

(2) When new bus route identification signs are installed or old signs are replaced, they shall comply with the requirements of 10.2.1(3).

10.3 Fixed Facilities and Stations.

10.3.1 New Construction. New stations in rapid rail, light rail, commuter rail, intercity bus, intercity rail, high speed rail, and other fixed guideway systems (e.g., automated guideway transit, monorails, etc.) shall comply with the following provisions, as applicable:

(1) Elements such as ramps, elevators or other circulation devices, fare vending or other ticketing areas, and fare collection areas shall be placed to minimize the distance which wheelchair users and other persons who cannot negotiate steps may have to travel compared to the general public. The circulation path, including an accessible entrance and an accessible route, for persons with disabilities shall, to the maximum extent practicable, coincide with the circulation path for the general public. Where the circulation path is different, signage complying with 4.30.1, 4.30.2, 4.30.3, 4.30.5, and 4.30.7(1) shall be provided to indicate direction to and identify the accessible entrance and accessible route.

(2) In lieu of compliance with 4.1.3(8), at least one entrance to each station shall comply with 4.14, Entrances. If different entrances to a station serve different transportation fixed routes or groups of fixed routes, at least one entrance serving each group or route shall comply with 4.14, Entrances. All accessible entrances shall, to the maximum extent practicable, coincide with those used by the majority of the general public.

(3) Direct connections to commercial, retail, or residential facilities shall have an accessible route complying with 4.3 from the point of connection to boarding platforms and all transportation system elements used by the public. Any elements provided to facilitate future direct connections shall be on an accessible route connecting boarding platforms and all transportation system elements used by the public.

(4) Where signs are provided at entrances to stations identifying the station or the entrance, or both, at least one sign at each entrance shall comply with 4.30.4 and 4.30.6. Such signs shall be placed in uniform locations at entrances within the transit system to the maximum extent practicable.

EXCEPTION: Where the station has no defined entrance, but signage is provided, then the accessible signage shall be placed in a central location.

(5) Stations covered by this section shall have identification signs complying with 4.30.1, 4.30.2, 4.30.3, and 4.30.5. Signs shall be placed at frequent intervals and shall be clearly visible from within the vehicle on both sides when not obstructed by another train. When station identification signs are placed close to vehicle windows (i.e., on the side opposite from boarding) each shall have the top of the highest letter or symbol below the top of the vehicle window and the bottom of the lowest letter or symbol above the horizontal mid-line of the vehicle window.

(6) Lists of stations, routes, or destinations served by the station and located on boarding areas, platforms, or mezzanines shall comply with 4.30.1, 4.30.2, 4.30.3, and 4.30.5. A minimum of one sign identifying the specific station and complying with 4.30.4 and 4.30.6 shall be provided on each platform or boarding area. All signs referenced in this paragraph shall, to the maximum extent practicable, be placed in uniform locations within the transit system.

10.3 Fixed Facilities and Stations

(7)* Automatic fare vending, collection and adjustment (e.g., add-fare) systems shall comply with 4.34.2, 4.34.3, 4.34.4, and 4.34.5. At each accessible entrance such devices shall be located on an accessible route. If self-service fare collection devices are provided for the use of the general public, at least one accessible device for entering, and at least one for exiting, unless one device serves both functions, shall be provided at each accessible point of entry or exit. Accessible fare collection devices shall have a minimum clear opening width of 32 inches; shall permit passage of a wheelchair; and, where provided, coin or card slots and controls necessary for operation shall comply with 4.27. Gates which must be pushed open by wheelchair or mobility aid users shall have a smooth continuous surface extending from 2 inches above the floor to 27 inches above the floor and shall comply with 4.13. Where the circulation path does not coincide with that used by the general public, accessible fare collection systems shall be located at or adjacent to the accessible point of entry or exit.

(8) Platform edges bordering a drop-off and not protected by platform screens or guard rails shall have a detectable warning. Such detectable warnings shall comply with 4.29.2 and shall be 24 inches wide running the full length of the platform drop-off.

(9) In stations covered by this section, rail-to-platform height in new stations shall be coordinated with the floor height of new vehicles so that the vertical difference, measured when the vehicle is at rest, is within plus or minus 5/8 inch under normal passenger load conditions. For rapid rail, light rail, commuter rail, high speed rail, and intercity rail systems in new stations, the horizontal gap, measured when the new vehicle is at rest, shall be no greater than 3 inches. For slow moving automated guideway "people mover" transit systems, the horizontal gap in new stations shall be no greater than 1 inch.

EXCEPTION 1: Existing vehicles operating in new stations may have a vertical difference with respect to the new platform within plus or minus 1-1/2 inches.

EXCEPTION 2: In light rail, commuter rail and intercity rail systems where it is not operationally or structurally feasible to meet the horizontal gap or vertical difference requirements, mini-high platforms, car-borne or platform-mounted lifts, ramps or bridge plates, or similar manually deployed devices, meeting the applicable requirements of 36 CFR part 1192, or 49 CFR part 38 shall suffice.

(10) Stations shall not be designed or constructed so as to require persons with disabilities to board or alight from a vehicle at a location other than one used by the general public.

(11) Illumination levels in the areas where signage is located shall be uniform and shall minimize glare on signs. Lighting along circulation routes shall be of a type and configuration to provide uniform illumination.

(12) Text Telephones: The following shall be provided in accordance with 4.31.9:

(a) If an interior public pay telephone is provided in a transit facility (as defined by the Department of Transportation) at least one interior public text telephone shall be provided in the station.

(b) Where four or more public pay telephones serve a particular entrance to a rail station and at least one is in an interior location, at least one interior public text telephone shall be provided to serve that entrance. Compliance with this section constitutes compliance with section 4.1.3(17)(c).

(13) Where it is necessary to cross tracks to reach boarding platforms, the route surface shall be level and flush with the rail top at the outer edge and between the rails, except for a maximum 2-1/2 inch gap on the inner edge of each rail to permit passage of wheel flanges. Such crossings shall comply with 4.29.5. Where gap reduction is not practicable, an above-grade or below-grade accessible route shall be provided.

(14) Where public address systems are provided to convey information to the public in terminals, stations, or other fixed facilities, a means of conveying the same or equivalent information to persons with hearing loss or who are deaf shall be provided.

10.3.2 Existing Facilities: Key Stations.

(15) Where clocks are provided for use by the general public, the clock face shall be uncluttered so that its elements are clearly visible. Hands, numerals, and/or digits shall contrast with the background either light-on-dark or dark-on-light. Where clocks are mounted overhead, numerals and/or digits shall comply with 4.30.3. Clocks shall be placed in uniform locations throughout the facility and system to the maximum extent practicable.

(16) Where provided in below grade stations, escalators shall have a minimum clear width of 32 inches. At the top and bottom of each escalator run, at least two contiguous treads shall be level beyond the comb plate before the risers begin to form. All escalator treads shall be marked by a strip of clearly contrasting color, 2 inches in width, placed parallel to and on the nose of each step. The strip shall be of a material that is at least as slip resistant as the remainder of the tread. The edge of the tread shall be apparent from both ascending and descending directions.

(17) Where provided, elevators shall be glazed or have transparent panels to allow an unobstructed view both in to and out of the car. Elevators shall comply with 4.10.

EXCEPTION: Elevator cars with a clear floor area in which a 60 inch diameter circle can be inscribed may be substituted for the minimum car dimensions of 4.10, Fig. 22.

(18) Where provided, ticketing areas shall permit persons with disabilities to obtain a ticket and check baggage and shall comply with 7.2.

(19) Where provided, baggage check-in and retrieval systems shall be on an accessible route complying with 4.3, and shall have space immediately adjacent complying with 4.2. If unattended security barriers are provided, at least one gate shall comply with 4.13. Gates which must be pushed open by wheelchair or mobility aid users shall have a smooth continuous surface extending from 2 inches above the floor to 27 inches above the floor.

10.3.2 Existing Facilities: Key Stations.

(1) Rapid, light and commuter rail key stations, as defined under criteria established by the Department of Transportation in subpart C of 49 CFR part 37 and existing intercity rail stations shall provide at least one accessible route from an accessible entrance to those areas necessary for use of the transportation system.

(2) The accessible route required by 10.3.2(1) shall include the features specified in 10.3.1 (1), (4)-(9), (11)-(15), and (17)-(19).

(3) Where technical infeasibility in existing stations requires the accessible route to lead from the public way to a paid area of the transit system, an accessible fare collection system, complying with 10.3.1(7), shall be provided along such accessible route.

(4) In light rail, rapid rail and commuter rail key stations, the platform or a portion thereof and the vehicle floor shall be coordinated so that the vertical difference, measured when the vehicle is at rest, is within plus or minus 1-1/2 inches under all normal passenger load conditions, and the horizontal gap, measured when the vehicle is at rest, is no greater than 3 inches for at least one door of each vehicle or car required to be accessible by 49 CFR part 37.

EXCEPTION 1: Existing vehicles retrofitted to meet the requirements of 49 CFR 37.93 (one-car-per-train rule) shall be coordinated with the platform such that, for at least one door, the vertical difference between the vehicle floor and the platform, measured when the vehicle is at rest with 50% normal passenger capacity, is within plus or minus 2 inches and the horizontal gap is no greater than 4 inches.

EXCEPTION 2: Where it is not structurally or operationally feasible to meet the horizontal gap or vertical difference requirements, mini-high platforms, car-borne or platform mounted lifts, ramps or bridge plates, or similar manually deployed devices, meeting the applicable requirements of 36 CFR part 1192, or 49 CFR part 38, shall suffice.

(5) New direct connections to commercial, retail, or residential facilities shall, to the maximum extent feasible, have an accessible route complying with 4.3 from the point of connection to boarding platforms and all transportation system elements used by the public. Any elements provided to facilitate future direct connections shall be on an accessible route connecting boarding platforms and all transportation system elements used by the public.

10.3.3 Existing Facilities: Alterations.

(1) For the purpose of complying with 4.1.6(2) Alterations to an Area Containing a Primary Function, an area of primary function shall be as defined by applicable provisions of 49 CFR 37.43(c) (Department of Transportation's ADA Rule) or 28 CFR 36.403 (Department of Justice's ADA Rule).

10.4. Airports.

10.4.1 New Construction.

(1) Elements such as ramps, elevators or other vertical circulation devices, ticketing areas, security checkpoints, or passenger waiting areas shall be placed to minimize the distance which wheelchair users and other persons who cannot negotiate steps may have to travel compared to the general public.

(2) The circulation path, including an accessible entrance and an accessible route, for persons with disabilities shall, to the maximum extent practicable, coincide with the circulation path for the general public. Where the circulation path is different, directional signage complying with 4.30.1, 4.30.2, 4.30.3 and 4.30.5 shall be provided which indicates the location of the nearest accessible entrance and its accessible route.

(3) Ticketing areas shall permit persons with disabilities to obtain a ticket and check baggage and shall comply with 7.2.

(4) Where public pay telephones are provided, and at least one is at an interior location, a public text telephone shall be provided in compliance with 4.31.9. Additionally, if four or more public pay telephones are located in any of the following locations, at least one public text telephone shall also be provided in that location:

(a) a main terminal outside the security areas;
(b) a concourse within the security areas; or
(c) a baggage claim area in a terminal.

Compliance with this section constitutes compliance with section 4.1.3(17)(c).

(5) Baggage check-in and retrieval systems shall be on an accessible route complying with 4.3, and shall have space immediately adjacent complying with 4.2.4. If unattended security barriers are provided, at least one gate shall comply with 4.13. Gates which must be pushed open by wheelchair or mobility aid users shall have a smooth continuous surface extending from 2 inches above the floor to 27 inches above the floor.

(6) Terminal information systems which broadcast information to the general public through a public address system shall provide a means to provide the same or equivalent information to persons with a hearing loss or who are deaf. Such methods may include, but are not limited to, visual paging systems using video monitors and computer technology. For persons with certain types of hearing loss such methods may include, but are not limited to, an assistive listening system complying with 4.33.7.

(7) Where clocks are provided for use by the general public the clock face shall be uncluttered so that its elements are clearly visible. Hands, numerals, and/or digits shall contrast with their background either light-on-dark or dark-on-light. Where clocks are mounted overhead, numerals and/or digits shall comply with 4.30.3. Clocks shall be placed in uniform locations throughout the facility to the maximum extent practicable.

(8) Security Systems. [Reserved]

10.5 Boat and Ferry Docks.

[Reserved]

APPENDIX

This appendix contains *materials of an advisory nature* and provides additional information that should help the reader to understand the minimum requirements of the *guidelines* or to design buildings or facilities for greater accessibility. The paragraph numbers correspond to the sections or paragraphs of the *guideline* to which the material relates and are therefore not consecutive (for example, A4.2.1 contains additional information relevant to 4.2.1). Sections *of the guidelines* for which additional material appears in this appendix have been indicated by an asterisk. *Nothing in this appendix shall in any way obviate any obligation to comply with the requirements of the guidelines itself.*

A2.2 Equivalent Facilitation. *Specific examples of equivalent facilitation are found in the following sections:*

4.1.6(3)(c)	*Elevators in Alterations*
4.31.9	*Text Telephones*
7.2	*Sales and Service Counters, Teller Windows, Information Counters*
9.1.4	*Classes of Sleeping Accommodations*
9.2.2(6)(d)	*Requirements for Accessible Units, Sleeping Rooms, and Suites*

A4.1.1 Application.

A4.1.1(3) Areas Used Only by Employees as Work Areas. *Where there are a series of individual work stations of the same type (e.g., laboratories, service counters, ticket booths), 5%, but not less than one, of each type of work station should be constructed so that an individual with disabilities can maneuver within the work stations. Rooms housing individual offices in a typical office building must meet the requirements of the guidelines concerning doors, accessible routes, etc. but do not need to allow for maneuvering space around individual desks. Modifications required to permit maneuvering within the work area may be accomplished as a reasonable accommodation to individual employees with disabilities under Title I of the ADA. Consideration should also be given to placing shelves in employee work areas at a convenient height for accessibility or installing commercially available shelving that is adjustable so that reasonable accommodations can be made in the future.*

If work stations are made accessible they should comply with the applicable provisions of 4.2 through 4.35.

A4.1.2 Accessible Sites and Exterior Facilities: New Construction.

A4.1.2(5)(e) Valet Parking. *Valet parking is not always usable by individuals with disabilities. For instance, an individual may use a type of vehicle controls that render the regular controls inoperable or the driver's seat in a van may be removed. In these situations, another person cannot park the vehicle. It is recommended that some self-parking spaces be provided at valet parking facilities for individuals whose vehicles cannot be parked by another person and that such spaces be located on an accessible route to the entrance of the facility.*

A4.1.3 Accessible Buildings: New Construction.

A4.1.3(5) *Only full passenger elevators are covered by the accessibility provisions of 4.10. Materials and equipment hoists, freight elevators not intended for passenger use, dumbwaiters, and construction elevators are not covered by these guidelines. If a building is exempt from the elevator requirement, it is not necessary to provide a platform lift or other means of vertical access in lieu of an elevator.*

Under Exception 4, platform lifts are allowed where existing conditions make it impractical to install a ramp or elevator. Such conditions generally occur where it is essential to provide access to small raised or lowered areas where space may not be available for a ramp. Examples include, but are not limited to, raised pharmacy platforms, commercial offices raised above a sales floor, or radio and news booths.

A4.1.3(9) *Supervised automatic sprinkler systems have built in signals for monitoring features of the system such as the opening and closing of water control valves, the power supplies for needed pumps, water tank levels, and for indicating conditions that will impair the satisfactory operation of the sprinkler system.*

A4.2 Space Allowances and Reach Ranges

Because of these monitoring features, supervised automatic sprinkler systems have a high level of satisfactory performance and response to fire conditions.

A4.1.3(10) *If an odd number of drinking fountains is provided on a floor, the requirement in 4.1.3(10)(b) may be met by rounding down the odd number to an even number and calculating 50% of the even number. When more than one drinking fountain on a floor is required to comply with 4.15, those fountains should be dispersed to allow wheelchair users convenient access. For example, in a large facility such as a convention center that has water fountains at several locations on a floor, the accessible water fountains should be located so that wheelchair users do not have to travel a greater distance than other people to use a drinking fountain.*

A4.1.3(17)(b) *In addition to the requirements of section 4.1.3(17)(b), the installation of additional volume controls is encouraged. Volume controls may be installed on any telephone.*

A4.1.3(19)(a) *Readily removable or folding seating units may be installed in lieu of providing an open space for wheelchair users. Folding seating units are usually two fixed seats that can be easily folded into a fixed center bar to allow for one or two open spaces for wheelchair users when necessary. These units are more easily adapted than removable seats which generally require the seat to be removed in advance by the facility management.*

Either a sign or a marker placed on seating with removable or folding arm rests is required by this section. Consideration should be given for ensuring identification of such seats in a darkened theater. For example, a marker which contrasts (light on dark or dark on light) and which also reflects light could be placed on the side of such seating so as to be visible in a lighted auditorium and also to reflect light from a flashlight.

A4.1.6 Accessible Buildings: Alterations.

A4.1.6(1)(h) *When an entrance is being altered, it is preferable that those entrances being altered be made accessible to the extent feasible.*

A4.2 Space Allowances and Reach Ranges.

A4.2.1 Wheelchair Passage Width.

(1) Space Requirements for Wheelchairs. Many persons who use wheelchairs need a 30 in (760 mm) clear opening width for doorways, gates, and the like, when the latter are entered head-on. If the *person* is unfamiliar with a building, if competing traffic is heavy, if sudden or frequent movements are needed, or if the wheelchair must be turned at an opening, then greater clear widths are needed. For most situations, the addition of an inch of leeway on either side is sufficient. Thus, a minimum clear width of 32 in (815 mm) will provide adequate clearance. However, when an opening or a restriction in a passageway is more than 24 in (610 mm) long, it is essentially a passageway and must be at least 36 in (915 mm) wide.

(2) Space Requirements for Use of Walking Aids. Although people who use walking aids can maneuver through clear width openings of 32 in (815 mm), they need 36 in (915 mm) wide passageways and walks for comfortable gaits. Crutch tips, often extending down at a wide angle, are a hazard in narrow passageways where they might not be seen by other pedestrians. Thus, the 36 in (915 mm) width provides a safety allowance both for the person *with a disability* and for others.

(3) Space Requirements for Passing. Able-bodied *persons* in winter clothing, walking

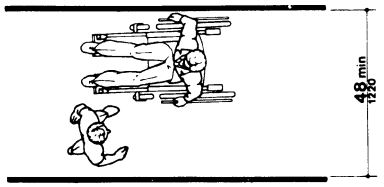

Fig. A1
Minimum Passage Width for One Wheelchair and One Ambulatory Person

A4.2 Space Allowances and Reach Ranges

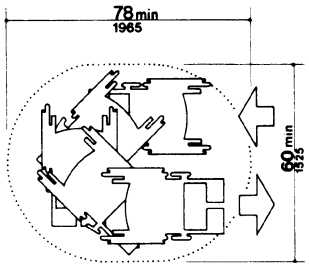

Fig. A2
Space Needed for Smooth U-Turn in a Wheelchair

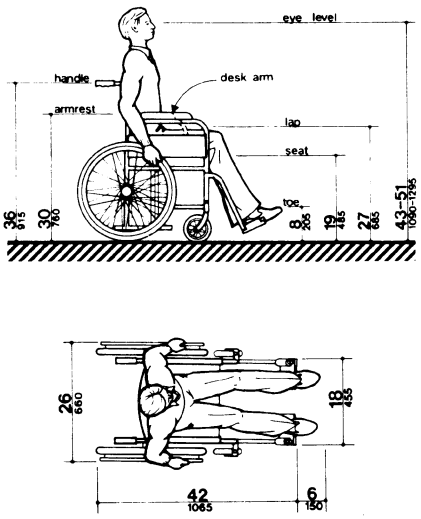

NOTE: Footrests may extend further for tall people

Fig. A3
Dimensions of Adult-Sized Wheelchairs

straight ahead with arms swinging, need 32 in (815 mm) of width, which includes 2 in (50 mm) on either side for sway, and another 1 in (25 mm) tolerance on either side for clearing nearby objects or other pedestrians. Almost all wheelchair users and those who use walking aids can also manage within this 32 in (815 mm) width for short distances. Thus, two streams of traffic can pass in 64 in (1625 mm) in a comfortable flow. Sixty inches (1525 mm) provides a minimum width for a somewhat more restricted flow. If the clear width is less than 60 in (1525 mm), two wheelchair users will not be able to pass but will have to seek a wider place for passing. Forty-eight inches (1220 mm) is the minimum width needed for an ambulatory person to pass a nonambulatory or semi-ambulatory person. Within this 48 in (1220 mm) width, the ambulatory person will have to twist to pass a wheelchair user, a person with a *service animal*, or a

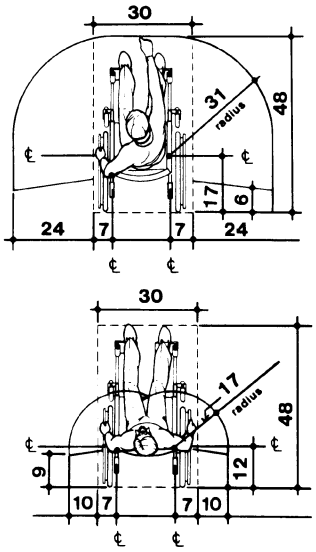

Fig. A3 (a)

A4.3 Accessible Route

semi-ambulatory person. There will be little leeway for swaying or missteps (see Fig. A1).

A4.2.3 Wheelchair Turning Space. *These guidelines specify* a minimum space of 60 in (1525 mm) diameter *or a 60 in by 60 in (1525 mm by 1525 mm) T-shaped space* for a pivoting 180-degree turn of a wheelchair. This space is usually satisfactory for turning around, but many people will not be able to turn without repeated tries and bumping into surrounding objects. The space shown in Fig. A2 will allow most wheelchair users to complete U-turns without difficulty.

A4.2.4 Clear Floor or Ground Space for Wheelchairs. The wheelchair and user shown in Fig. A3 represent typical dimensions for a large adult male. The space requirements in this *guideline* are based upon maneuvering clearances that will accommodate most wheelchairs. Fig. A3 provides a uniform reference for design not covered by this *guideline*.

A4.2.5 & A4.2.6 Reach. *Reach ranges for persons seated in wheelchairs may be further clarified by Fig. A3(a). These drawings approximate in the plan view the information shown in Fig. 4, 5, and 6.*

A4.3 Accessible Route.

A4.3.1 General.

(1) Travel Distances. Many people with mobility impairments can move at only very slow speeds; for many, traveling 200 ft (61 m) could take about 2 minutes. This assumes a rate of about 1.5 ft/s (455 mm/s) on level ground. It also assumes that the traveler would move continuously. However, on trips over 100 ft (30 m), disabled people are apt to rest frequently, which substantially increases their trip times. Resting periods of 2 minutes for every 100 ft (30 m) can be used to estimate travel times for people with severely limited stamina. In inclement weather, slow progress and resting can greatly increase a disabled person's exposure to the elements.

(2) Sites. Level, indirect routes or those with running slopes lower than 1:20 can sometimes provide more convenience than direct routes with maximum allowable slopes or with ramps.

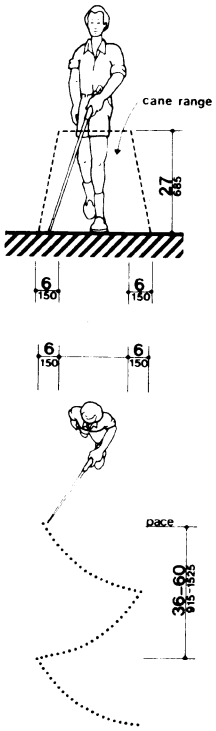

Fig. A4
Cane Technique

A4.3.10 Egress. Because people with disabilities may visit, be employed or be a resident in any building, emergency management plans with specific provisions to ensure their safe evacuation also play an essential role in fire safety and life safety.

A4.3.11.3 Stairway Width. *A 48 inch (1220 mm) wide exit stairway is needed to allow assisted evacuation (e.g., carrying a person in a wheelchair) without encroaching on the exit path for ambulatory persons.*

A4.3.11.4 Two-way Communication. *It is essential that emergency communication not be dependent on voice communications alone because the safety of people with hearing or speech impairments could be jeopardized. The visible signal requirement could be satisfied with something as simple as a button in the area of rescue assistance that lights, indicating that help is on the way, when the message is answered at the point of entry.*

A4.4 Protruding Objects.

A4.4.1 General. *Service animals* are trained to recognize and avoid hazards. However, most people with severe impairments of vision use the long cane as an aid to mobility. The two principal cane techniques are the touch technique, where the cane arcs from side to side and touches points outside both shoulders; and the diagonal technique, where the cane is held in a stationary position diagonally across the body with the cane tip touching or just above the ground at a point outside one shoulder and the handle or grip extending to a point outside the other shoulder. The touch technique is used primarily in uncontrolled areas, while the diagonal technique is used primarily in certain limited, controlled, and familiar environments. Cane users are often trained to use both techniques.

Potential hazardous objects are noticed only if they fall within the detection range of canes (see Fig. A4). Visually impaired people walking toward an object can detect an overhang if its lowest surface is not higher than 27 in (685 mm). When walking alongside *protruding* objects, they cannot detect overhangs. Since proper cane and *service animal* techniques keep people away from the edge of a path or from walls, a slight overhang of no more than 4 in (100 mm) is not hazardous.

A4.5 Ground and Floor Surfaces.

A4.5.1 General. *People who have difficulty walking or* maintaining balance *or who use crutches, canes, or walkers,* and those with restricted gaits are particularly sensitive to slipping and tripping hazards. For such people, a stable and regular surface is necessary for safe walking, particularly on stairs. Wheelchairs can be propelled most easily on surfaces that are hard, stable, and regular. Soft loose surfaces such as shag carpet, loose sand or gravel, wet clay, and irregular surfaces such as cobblestones can significantly impede wheelchair movement.

Slip resistance is based on the frictional force necessary to keep a shoe heel or crutch tip from slipping on a walking surface under conditions likely to be found on the surface. *While the dynamic coefficient of friction during walking varies in a complex and non-uniform way, the static coefficient of friction, which can be measured in several ways, provides a close approximation of the slip resistance of a surface. Contrary to popular belief, some slippage is necessary to walking, especially for persons with restricted gaits; a truly "non-slip" surface could not be negotiated.*

The Occupational Safety and Health Administration recommends that walking surfaces have a static coefficient of friction of 0.5. A research project sponsored by the Architectural and Transportation Barriers Compliance Board (Access Board) conducted tests with persons with disabilities and concluded that a higher coefficient of friction was needed by such persons. A static coefficient of friction of 0.6 is recommended for accessible routes and 0.8 for ramps.

It is recognized that the coefficient of friction varies considerably due to the presence of contaminants, water, floor finishes, and other factors not under the control of the designer or builder and not subject to design and construction guidelines and that compliance would be difficult to measure on the building site. Nevertheless, many common building materials suitable for flooring are now labeled with information on the static coefficient of friction. While it may not be possible to compare one product directly with another, or to guarantee a constant measure, builders and designers are encouraged to specify materials with appropriate values. As more products include information on slip resistance, improved uniformity in measurement and specification is likely. The Access Board's advisory guidelines on Slip Resistant Surfaces provides additional information on this subject.

Cross slopes on walks and ground or floor surfaces can cause considerable difficulty in propelling a wheelchair in a straight line.

A4.6 Parking and Passenger Loading Zones

A4.5.3 Carpet. Much more needs to be done in developing both quantitative and qualitative criteria for carpeting *(i.e., problems associated with texture and weave need to be studied).* However, certain functional characteristics are well established. When both carpet and padding are used, it is desirable to have minimum movement (preferably none) between the floor and the pad and the pad and the carpet which would allow the carpet to hump or warp. In heavily trafficked areas, a thick, soft (plush) pad or cushion, particularly in combination with long carpet pile, makes it difficult for individuals in wheelchairs and those with other ambulatory disabilities to get about. Firm carpeting can be achieved through proper selection and combination of pad and carpet, sometimes with the elimination of the pad or cushion, and with proper installation. *Carpeting designed with a weave that causes a zig-zag effect when wheeled across is strongly discouraged.*

A4.6 Parking and Passenger Loading Zones.

A4.6.3 Parking Spaces. *The increasing use of vans with side-mounted lifts or ramps by persons with disabilities has necessitated some revisions in specifications for parking spaces and adjacent access aisles. The typical accessible parking space is 96 in (2440 mm) wide with an adjacent 60 in (1525 mm) access aisle. However, this aisle does not permit lifts or ramps to be deployed and still leave room for a person using a wheelchair or other mobility aid to exit the lift platform or ramp. In tests conducted with actual lift/van/wheelchair combinations, (under a Board-sponsored Accessible Parking and Loading Zones Project) researchers found that a space and aisle totaling almost 204 in (5180 mm) wide was needed to deploy a lift and exit conveniently. The "van accessible" parking space required by these guidelines provides a 96 in (2440 mm) wide space with a 96 in (2440 mm) adjacent access aisle which is just wide enough to maneuver and exit from a side mounted lift. If a 96 in (2440 mm) access aisle is placed between two spaces, two "van accessible" spaces are created. Alternatively, if the wide access aisle is provided at the end of a row (an area often unused), it may be possible to provide the wide access aisle without additional space (see Fig. A5(a)).*

A sign is needed to alert van users to the presence of the wider aisle, but the space is not intended to be restricted only to vans.

"Universal" Parking Space Design. An alternative to the provision of a percentage of spaces with a wide aisle, and the associated need to include additional signage, is the use of what has been called the "universal" parking space design. Under this design, all accessible spaces are 132 in (3350 mm) wide with a 60 in (1525 mm) access aisle (see Fig. A5(b)). One

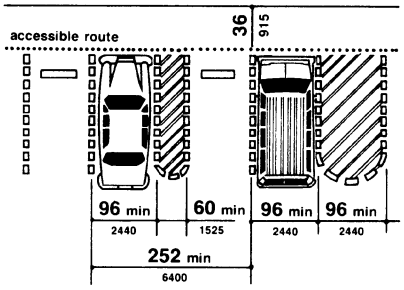

(a)
Van Accessible Space at End Row

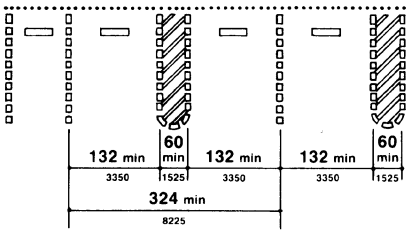

(b)
Universal Parking Space Design

Fig. A5
Parking Space Alternatives

advantage to this design is that no additional signage is needed because all spaces can accommodate a van with a side-mounted lift or ramp. Also, there is no competition between cars and vans for spaces since all spaces can accommodate either. Furthermore, the wider space permits vehicles to park to one side or the other within the 132 in (3350 mm) space to allow persons to exit and enter the vehicle on either the driver or passenger side, although, in some cases, this would require exiting or entering without a marked access aisle.

An essential consideration for any design is having the access aisle level with the parking space. Since a person with a disability, using a lift or ramp, must maneuver within the access aisle, the aisle cannot include a ramp or sloped area. The access aisle must be connected to an accessible route to the appropriate accessible entrance of a building or facility. The parking access aisle must either blend with the accessible route or have a curb ramp complying with 4.7. Such a curb ramp opening must be located within the access aisle boundaries, not within the parking space boundaries. Unfortunately, many facilities are designed with a ramp that is blocked when any vehicle parks in the accessible space. Also, the required dimensions of the access aisle cannot be restricted by planters, curbs or wheel stops.

A4.6.4 Signage. Signs designating parking places for disabled people can be seen from a driver's seat if the signs are mounted high enough above the ground and located at the front of a parking space.

A4.6.5 Vertical Clearance. High-top vans, which disabled people or transportation services often use, require higher clearances in parking garages than automobiles.

A4.8 Ramps.

A4.8.1 General. Ramps are essential for wheelchair users if elevators or lifts are not available to connect different levels. However, some people who use walking aids have difficulty with ramps and prefer stairs.

A4.8.2 Slope and Rise. *Ramp slopes between 1:16 and 1:20 are preferred.* The ability to manage an incline is related to both its slope and its length. Wheelchair users with disabilities affecting *their* arms or with low stamina have serious difficulty using inclines. Most ambulatory people and most people who use wheelchairs can manage a slope of 1:16. Many people cannot manage a slope of 1:12 for 30 ft (9 m).

A4.8.4 Landings. *Level landings are essential toward maintaining an aggregate slope that complies with these guidelines. A ramp landing that is not level causes individuals using wheelchairs to tip backward or bottom out when the ramp is approached.*

A4.8.5 Handrails. The requirements for stair and ramp handrails in this *guideline* are for adults. When children are principal users in a building or facility, a second set of handrails at an appropriate height can assist them and aid in preventing accidents.

A4.9 Stairs.

A4.9.1 Minimum Number. *Only interior and exterior stairs connecting levels that are not connected by an elevator, ramp, or other accessible means of vertical access have to comply with 4.9.*

A4.10 Elevators.

A4.10.6 Door Protective and Reopening Device. The required door reopening device would hold the door open for 20 seconds if the doorway remains obstructed. After 20 seconds, the door may begin to close. However, if designed in accordance with *ASME A17.1-1990*, the door closing movement could still be stopped if a person or object exerts sufficient force at any point on the door edge.

A4.10.7 Door and Signal Timing for Hall Calls. This paragraph allows variation in the location of call buttons, advance time for warning signals, and the door-holding period used to meet the time requirement.

A4.10.12 Car Controls. Industry-wide standardization of elevator control panel design would make all elevators significantly more convenient for use by people with severe visual impairments. In many cases, it will be possible to locate the highest control on elevator panels within 48 in (1220 mm) from the floor.

A4.11 Platform Lifts *(Wheelchair Lifts)*

A4.10.13 Car Position Indicators. A special button may be provided that would activate the audible signal within the given elevator only for the desired trip, rather than maintaining the audible signal in constant operation.

A4.10.14 Emergency Communications. A device that requires no handset is easier to use by people who have difficulty reaching. *Also, small handles on handset compartment doors are not usable by people who have difficulty grasping.*

Ideally, emergency two-way communication systems should provide both voice and visual display intercommunication so that persons with hearing impairments and persons with vision impairments can receive information regarding the status of a rescue. A voice intercommunication system cannot be the only means of communication because it is not accessible to people with speech and hearing impairments. While a voice intercommunication system is not required, at a minimum, the system should provide both an audio and visual indication that a rescue is on the way.

A4.11 Platform Lifts *(Wheelchair Lifts).*

A4.11.2 Other Requirements. *Inclined stairway chairlifts, and inclined and vertical platform lifts (wheelchair lifts) are available* for short-distance, vertical transportation of people with disabilities. Care should be taken in selecting lifts *as some lifts are not equally suitable for use by both wheelchair users and semi-ambulatory individuals.*

A4.12 Windows.

A4.12.1 General. *Windows intended to be operated by occupants in accessible spaces should comply with 4.12.*

A4.12.2 Window Hardware. *Windows requiring pushing, pulling, or lifting to open (for example, double-hung, sliding, or casement and awning units without cranks) should require no more than 5 lbf (22.2 N) to open or close. Locks, cranks, and other window hardware should comply with 4.27.*

A4.13 Doors.

A4.13.8 Thresholds at Doorways. Thresholds and surface height changes in doorways are particularly inconvenient for wheelchair users who also have low stamina or restrictions in arm movement because complex maneuvering is required to get over the level change while operating the door.

A4.13.9 Door Hardware. Some disabled persons must push against a door with their chair or walker to open it. Applied kickplates on doors with closers can reduce required maintenance by withstanding abuse from wheelchairs and canes. To be effective, they should cover the door width, less approximately 2 in (51 mm), up to a height of 16 in (405 mm) from its bottom edge and be centered across the *width of the door.*

A4.13.10 Door Closers. Closers with delayed action features give a person more time to maneuver through doorways. They are particularly useful on frequently used interior doors such as entrances to toilet rooms.

A4.13.11 Door Opening Force. Although most people with disabilities can exert at least 5 lbf (22.2N), both pushing and pulling from a stationary position, a few people with severe disabilities cannot exert 3 lbf (13.13N). Although some people cannot manage the allowable forces in this guideline and many others have difficulty, door closers must have certain minimum closing forces to close doors satisfactorily. Forces for pushing or pulling doors open are measured with a push-pull scale under the following conditions:

(1) Hinged doors: Force applied perpendicular to the door at the door opener or 30 in (760 mm) from the hinged side, whichever is farther from the hinge.

(2) Sliding or folding doors: Force applied parallel to the door at the door pull or latch.

(3) Application of force: Apply force gradually so that the applied force does not exceed the resistance of the door. In high-rise buildings, air-pressure differentials may require a modification of this specification in order to meet the functional intent.

A4.13.12 Automatic Doors and Power-Assisted Doors. Sliding automatic doors do not need guard rails and are more convenient for wheelchair users and visually impaired people to use. If slowly opening automatic doors can be reactivated before their closing cycle is completed, they will be more convenient in busy doorways.

A4.15 Drinking Fountains and Water Coolers.

A4.15.2 Spout Height. *Two drinking fountains, mounted side by side or on a single post, are usable by people with disabilities and people who find it difficult to bend over.*

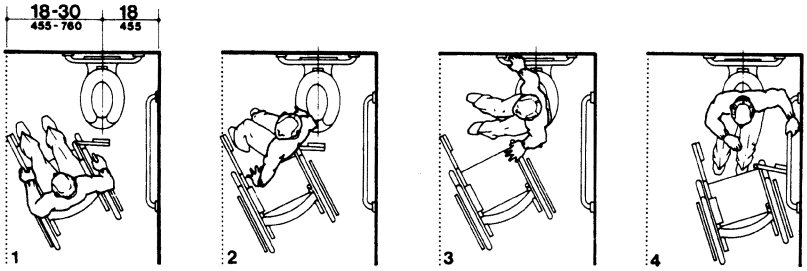

1 Takes transfer position, swings footrest out of the way, sets brakes.

2 Removes armrest, transfers.

3 Moves wheelchair out of the way, changes position (some people fold chair or pivot it 90° to the toilet).

4 Positions on toilet, releases brake.

(a)
Diagonal Approach

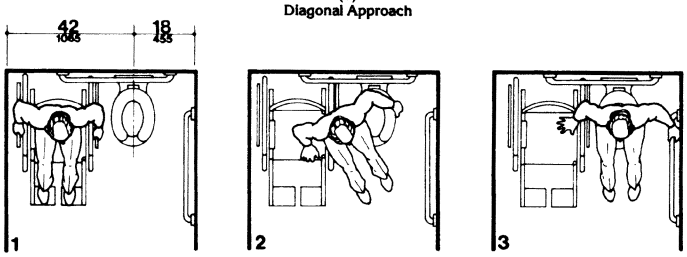

1 Takes transfer position, removes armrest, sets brakes.

2 Transfers.

3 Positions on toilet.

(b)
Side Approach

Fig. A6
Wheelchair Transfers

A4.16 Water Closets.

A4.16.3 Height. Height preferences for toilet seats vary considerably among disabled people. Higher seat heights may be an advantage to some ambulatory disabled people, but are often a disadvantage for wheelchair users and others. Toilet seats 18 in (455 mm) high seem to be a reasonable compromise. Thick seats and filler rings are available to adapt standard fixtures to these requirements.

A4.16.4 Grab Bars. Fig. A6(a) and (b) show the diagonal and side approaches most commonly used to transfer from a wheelchair to a water closet. Some wheelchair users can transfer from the front of the toilet while others use a 90-degree approach. Most people who use the two additional approaches can also use either the diagonal approach or the side approach.

A4.16.5 Flush Controls. Flush valves and related plumbing can be located behind walls or to the side of the toilet, or a toilet seat lid can be provided if plumbing fittings are directly behind the toilet seat. Such designs reduce the chance of injury and imbalance caused by leaning back against the fittings. Flush controls for tank-type toilets have a standardized mounting location on the left side of the tank (facing the tank). Tanks can be obtained by special order with controls mounted on the right side. If administrative authorities require flush controls for flush valves to be located in a position that conflicts with the location of the rear grab bar, then that bar may be split or shifted toward the wide side of the toilet area.

A4.17 Toilet Stalls.

A4.17.3 Size and Arrangement. *This section requires use of the 60 in (1525 mm) standard stall (Figure 30(a)) and permits the 36 in (915 mm) or 48 in (1220 mm) wide alternate stall (Figure 30(b)) only in alterations where provision of the standard stall is technically infeasible or where local plumbing codes prohibit reduction in the number of fixtures. A standard stall provides a clear space on one side of the water closet to enable persons who use wheelchairs to perform a side or diagonal transfer from the wheelchair to the water closet. However, some persons with disabilities who use mobility aids such as walkers, canes or crutches are better able to use the two parallel grab bars in the 36 in (915 mm) wide alternate stall to achieve a standing position.*

In large toilet rooms, where six or more toilet stalls are provided, it is therefore required that a 36 in (915 mm) wide stall with parallel grab bars be provided in addition to the standard stall required in new construction. The 36 in (915 mm) width is necessary to achieve proper use of the grab bars; wider stalls would position the grab bars too far apart to be easily used and narrower stalls would position the grab bars too close to the water closet. Since the stall is primarily intended for use by persons using canes, crutches and walkers, rather than wheelchairs, the length of the stall could be conventional. The door, however, must swing outward to ensure a usable space for people who use crutches or walkers.

A4.17.5 Doors. To make it easier for wheelchair users to close toilet stall doors, doors can be provided with closers, spring hinges, or a pull bar mounted on the inside surface of the door near the hinge side.

A4.19 Lavatories and Mirrors.

A4.19.6 Mirrors. If mirrors are to be used by both ambulatory people and wheelchair users, then they must be at least 74 in (1880 mm) high at their topmost edge. A single full length mirror can accommodate all people, including children.

A4.21 Shower Stalls.

A4.21.1 General. Shower stalls that are 36 in by 36 in (915 mm by 915 mm) wide provide additional safety to people who have difficulty maintaining balance because all grab bars and walls are within easy reach. Seated people use the walls of 36 in by 36 in (915 mm by 915 mm) showers for back support. Shower stalls that are 60 in (1525 mm) wide and have no curb may increase usability of a bathroom by wheelchair users because the shower area provides additional maneuvering space.

A4.22 Toilet Rooms.

A4.22.3 Clear Floor Space. *In many small facilities, single-user restrooms may be the only*

A4.22 Toilet Rooms

facilities provided for all building users. In addition, the guidelines allow the use of "unisex" or "family" accessible toilet rooms in alterations when technical infeasibility can be demonstrated. Experience has shown that the provision of accessible "unisex" or single-user restrooms is a reasonable way to provide access for wheelchair users and any attendants, especially when attendants are of the opposite sex. Since these facilities have proven so useful, it is often considered advantageous to install a "unisex" toilet room in new facilities in addition to making the multi-stall restrooms accessible, especially in shopping malls, large auditoriums, and convention centers.

Figure 28 (section 4.16) provides minimum clear floor space dimensions for toilets in accessible "unisex" toilet rooms. The dotted lines designate the minimum clear floor space, depending on the direction of approach, required for wheelchair users to transfer onto the water closet. The dimensions of 48 in (1220 mm) and 60 in (1525 mm), respectively, correspond to the space required for the two common transfer approaches utilized by wheelchair users (see Fig. A6). It is important to keep in mind that the placement of the lavatory to the immediate side of the water closet will preclude the side approach transfer illustrated in Figure A6(b).

To accommodate the side transfer, the space adjacent to the water closet must remain clear of obstruction for 42 in (1065 mm) from the centerline of the toilet (Figure 28) and the lavatory must not be located within this clear space. A turning circle or T-turn, the clear floor space at the lavatory, and maneuvering space at the door must be considered when determining the possible wall locations. A privacy latch or other accessible means of ensuring privacy during use should be provided at the door.

RECOMMENDATIONS:

1. In new construction, accessible single-user restrooms may be desirable in some situations because they can accommodate a wide variety of building users. However, they cannot be used in lieu of making the multi-stall toilet rooms accessible as required.

2. Where strict compliance to the guidelines for accessible toilet facilities is technically infeasible in the alteration of existing facilities, accessible "unisex" toilets are a reasonable alternative.

3. In designing accessible single-user restrooms, the provisions of adequate space to allow a side transfer will provide accommodation to the largest number of wheelchair users.

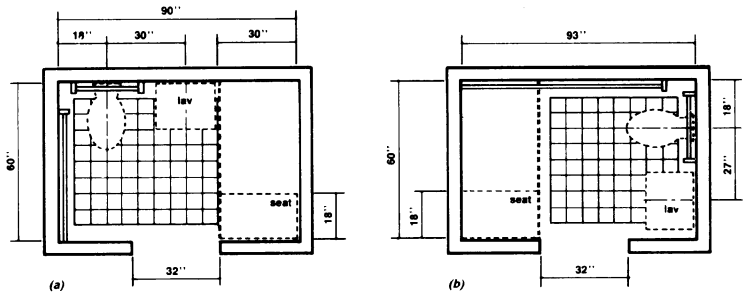

Fig. A7

A4.23 Bathrooms, Bathing Facilities, and Shower Rooms

A4.23 Bathrooms, Bathing Facilities, and Shower Rooms.

A4.23.3 Clear Floor Space. *Figure A7 shows two possible configurations of a toilet room with a roll-in shower. The specific shower shown is designed to fit exactly within the dimensions of a standard bathtub. Since the shower does not have a lip, the floor space can be used for required maneuvering space. This would permit a toilet room to be smaller than would be permitted with a bathtub and still provide enough floor space to be considered accessible. This design can provide accessibility in facilities where space is at a premium (i.e., hotels and medical care facilities). The alternate roll-in shower (Fig. 57b) also provides sufficient room for the "T-turn" and does not require plumbing to be on more than one wall.*

A4.23.9 Medicine Cabinets. Other alternatives for storing medical and personal care items are very useful to disabled people. Shelves, drawers, and floor-mounted cabinets can be provided within the reach ranges of disabled people.

A4.26 Handrails, Grab Bars, and Tub and Shower Seats.

A4.26.1 General. Many disabled people rely heavily upon grab bars and handrails to maintain balance and prevent serious falls. Many people brace their forearms between supports and walls to give them more leverage and stability in maintaining balance or for lifting. The grab bar clearance of 1-1/2 in (38 mm) required in this guideline is a safety clearance to prevent injuries resulting from arms slipping through the openings. It also provides adequate gripping room.

A4.26.2 Size and Spacing of Grab Bars and Handrails. This specification allows for alternate shapes of handrails as long as they allow an opposing grip similar to that provided by a circular section of 1-1/4 in to 1-1/2 in (32 mm to 38 mm).

A4.27 Controls and Operating Mechanisms.

A4.27.3 Height. *Fig. A8 further illustrates*

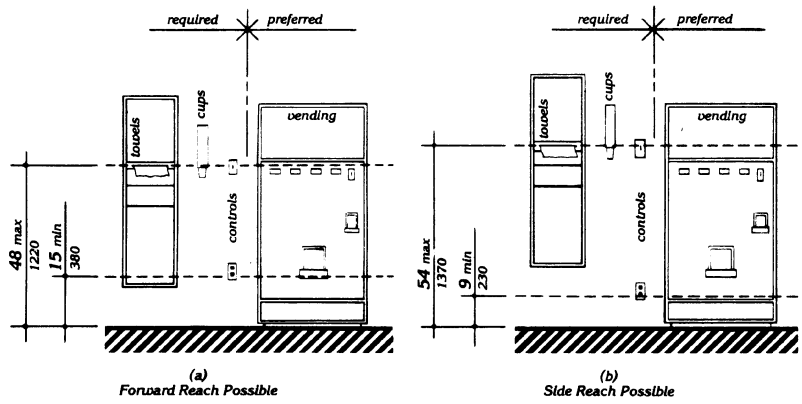

Fig. A8
Control Reach Limitations

mandatory and advisory control mounting height provisions for typical equipment.

Electrical receptacles installed to serve individual appliances and not intended for regular or frequent use by building occupants are not required to be mounted within the specified reach ranges. Examples would be receptacles installed specifically for wall-mounted clocks, refrigerators, and microwave ovens.

A4.28 Alarms.

A4.28.2 Audible Alarms. Audible emergency signals must have an intensity and frequency that can attract the attention of individuals who have partial hearing loss. People over 60 years of age generally have difficulty perceiving frequencies higher than 10,000 Hz. *An alarm signal which has a periodic element to its signal, such as single stroke bells (clang-pause-clang-pause), hi-low (up-down-up-down) and fast whoop (on-off-on-off) are best. Avoid continuous or reverberating tones. Select a signal which has a sound characterized by three or four clear tones without a great deal of "noise" in between.*

A4.28.3 Visual Alarms. The specifications in this section do not preclude the use of zoned or coded alarm systems.

A4.28.4 Auxiliary Alarms. Locating visual emergency alarms in rooms where persons who are deaf may work or reside alone can ensure that they will always be warned when an emergency alarm is activated. To be effective, such devices must be located and oriented so that they will spread signals and reflections throughout a space or raise the overall light level sharply. *However, visual alarms alone are not necessarily the best means to alert sleepers. A study conducted by Underwriters Laboratory (UL) concluded that a flashing light more than seven times brighter was required (110 candela v. 15 candela, at the same distance) to awaken sleepers as was needed to alert awake subjects in a normal daytime illuminated room.*

For hotel and other rooms where people are likely to be asleep, a signal-activated vibrator placed between mattress and box spring or under a pillow was found by UL to be much more effective in alerting sleepers. Many readily available devices are sound-activated so that they could respond to an alarm clock, clock radio, wake-up telephone call or room smoke detector. Activation by a building alarm system can either be accomplished by a separate circuit activating an auditory alarm which would, in turn, trigger the vibrator or by a signal transmitted through the ordinary 110-volt outlet. Transmission of signals through the power line is relatively simple and is the basis of common, inexpensive remote light control systems sold in many department and electronic stores for home use. So-called "wireless" intercoms operate on the same principal.

A4.29 *Detectable* Warnings.

A4.29.2 *Detectable* Warnings on Walking Surfaces. *The material used to provide contrast should contrast by at least 70%. Contrast in percent is determined by:*

$$Contrast = [(B_1 - B_2)/B_1] \times 100$$

where B_1 = light reflectance value (LRV) of the lighter area
and B_2 = light reflectance value (LRV) of the darker area.

Note that in any application both white and black are never absolute; thus, B_1 never equals 100 and B_2 is always greater than 0.

A4.30 Signage.

A4.30.1 General. In building complexes where finding locations independently on a routine basis may be a necessity (for example, college campuses), tactile maps or prerecorded instructions can be very helpful to visually impaired people. Several maps and auditory instructions have been developed and tested for specific applications. The type of map or instructions used must be based on the information to be communicated, which depends highly on the type of buildings or users.

Landmarks that can easily be distinguished by visually impaired individuals are useful as orientation cues. Such cues include changes in illumination level, bright colors, unique patterns, wall murals, location of special equipment or other architectural features.

Many people with disabilities have limitations in movement of their heads and reduced peripheral vision. Thus, signage positioned

A4.30 Signage

perpendicular to the path of travel is easiest for them to notice. People can generally distinguish signage within an angle of 30 degrees to either side of the centerlines of their faces without moving their heads.

A4.30.2 Character Proportion. The legibility of printed characters is a function of the viewing distance, character height, the ratio of the stroke width to the height of the character, the contrast of color between character and background, and print font. The size of characters must be based upon the intended viewing distance. A severely nearsighted person may have to be much closer to recognize a character of a given size than a person with normal visual acuity.

A4.30.4 Raised *and Brailled* Characters *and Pictorial Symbol Signs (Pictograms).* *The standard dimensions for literary Braille are as follows:*

Dot diameter	*.059 in.*
Inter-dot spacing	*.090 in.*
Horizontal separation between cells	*.241 in.*
Vertical separation between cells	*.395 in.*

Raised borders around *signs containing* raised characters may make them confusing to read unless the border is set far away from the characters. *Accessible signage with descriptive materials about public buildings, monuments, and objects of cultural interest may not provide sufficiently detailed and meaningful information. Interpretive guides, audio tape devices, or other methods may be more effective in presenting such information.*

A4.30.5 Finish and Contrast. *An eggshell finish (11 to 19 degree gloss on 60 degree glossimeter) is recommended. Research indicates that signs are more legible for persons with low vision when characters contrast with their background by at least 70 percent. Contrast in percent shall be determined by:*

$$Contrast = [(B_1 - B_2)/B_1] \times 100$$

where B_1 = light reflectance value (LRV) of the lighter area
and B_2 = light reflectance value (LRV) of the darker area.

Note that in any application both white and black are never absolute; thus, B_1 never equals 100 and B_2 is always greater than 0.

The greatest readability is usually achieved through the use of light-colored characters or symbols on a dark background.

A4.30.7 Symbols of Accessibility for Different Types of Listening Systems. *Paragraph 4 of this section requires signage indicating the availability of an assistive listening system. An appropriate message should be displayed with the international symbol of access for hearing loss since this symbol conveys general accessibility for people with hearing loss. Some suggestions are:*

INFRARED
ASSISTIVE LISTENING SYSTEM
AVAILABLE
——PLEASE ASK——

AUDIO LOOP IN USE
TURN T-SWITCH FOR
BETTER HEARING
——OR ASK FOR HELP——

FM
ASSISTIVE LISTENING
SYSTEM AVAILABLE
——PLEASE ASK——

The symbol may be used to notify persons of the availability of other auxiliary aids and services such as: real time captioning, captioned note taking, sign language interpreters, and oral interpreters.

A4.30.8 Illumination Levels. *Illumination levels on the sign surface shall be in the 100 to 300 lux range (10 to 30 footcandles) and shall be uniform over the sign surface. Signs shall be located such that the illumination level on the surface of the sign is not significantly exceeded by the ambient light or visible bright lighting source behind or in front of the sign.*

A4.31 Telephones.

A4.31.3 Mounting Height. In localities where the dial-tone first system is in operation, calls can be placed at a coin telephone through the operator without inserting coins. The operator button is located at a height of 46 in (1170 mm) if the coin slot of the telephone is at 54 in (1370 mm). A generally available public telephone with a coin slot mounted lower on the equipment would allow universal installation of telephones at a height of 48 in (1220 mm) or less to all operable parts.

A4.31.9 Text Telephones. *A public text telephone may be an integrated text telephone pay phone unit or a conventional portable text telephone that is permanently affixed within, or adjacent to, the telephone enclosure. In order to be usable with a pay phone, a text telephone which is not a single integrated text telephone pay phone unit will require a shelf large enough (10 in (255mm) wide by 10 in (255 mm) deep with a 6 in (150 mm) vertical clearance minimum) to accommodate the device, an electrical outlet, and a power cord. Movable or portable text telephones may be used to provide equivalent facilitation. A text telephone should be readily available so that a person using it may access the text telephone easily and conveniently. As currently designed pocket-type text telephones for personal use do not accommodate a wide range of users. Such devices would not be considered substantially equivalent to conventional text telephones. However, in the future as technology develops this could change.*

A4.32 *Fixed or Built-in* Seating and Tables.

A4.32.4 Height of *Tables or Counters.* Different types of work require different *table or counter* heights for comfort and optimal performance. Light detailed work such as writing requires a *table or counter* close to elbow height for a standing person. Heavy manual work such as rolling dough requires *a counter or table* height about 10 in (255 mm) below elbow height for a standing person. This principle of *high/low table or counter heights* also applies for seated persons; however, the limiting condition for seated manual work is clearance under the *table or counter.*

Table A1 shows convenient *counter heights* for seated persons. The great variety of heights for comfort and optimal performance indicates a need for alternatives or a compromise in height if people who stand and people who sit will be using the same counter area.

Table A1
Convenient Heights of Tables and Counters for Seated People[1]

Conditions of Use	Short Women in mm		Tall Men in mm	
Seated in a wheelchair:				
Manual work–				
Desk or removeable armrests	26	660	30	760
Fixed, full-size armrests[2]	32[3]	815	32[3]	815
Light detailed work:				
Desk or removable armrests	29	735	34	865
Fixed, full-size armrests[2]	32[3]	815	34	865
Seated in a 16-in. (405-mm)				
High chair:				
Manual work	26	660	27	685
Light detailed work	28	710	31	785

[1] All dimensions are based on a work-surface thickness of 1 1/2 in (38 mm) and a clearance of 1 1/2 in (38 mm) between legs and the underside of a work surface.

[2] This type of wheelchair arm does not interfere with the positioning of a wheelchair under a work surface.

[3] This dimension is limited by the height of the armrests: a lower height would be preferable. Some people in this group prefer lower work surfaces, which require positioning the wheelchair back from the edge of the counter.

A4.33 Assembly Areas.

A4.33.2 Size of Wheelchair Locations. Spaces large enough for two wheelchairs allow people who are coming to a performance together to sit together.

A4.33.3 Placement of Wheelchair Locations. The location of wheelchair areas can be planned so that a variety of positions

Table A2. Summary of Assistive Listening Devices

within the seating area are provided. This will allow choice in viewing and price categories.

Building/life safety codes set minimum distances between rows of fixed seats with consideration of the number of seats in a row, the exit aisle width and arrangement, and the location of exit doors. "Continental" seating, with a greater number of seats per row and a commensurate increase in row spacing and exit doors, facilitates emergency egress for all people and increases ease of access to mid-row seats especially for people who walk with difficulty. Consideration of this positive attribute of "continental" seating should be included along with all other factors in the design of fixed seating areas.

Table A2. Summary of Assistive Listening Devices

System	Advantages	Disadvantages	Typical Applications
Induction Loop Transmitter: Transducer wired to induction loop around listening area. Receiver: Self-contained induction receiver or personal hearing aid with telecoil.	Cost-Effective Low Maintenance Easy to use Unobtrusive May be possible to integrate into existing public address system. Some hearing aids can function as receivers.	Signal spills over to adjacent rooms. Susceptible to electrical interference. Limited portability Inconsistent signal strength. Head position affects signal strength. Lack of standards for induction coil performance.	Meeting areas Theaters Churches and Temples Conference rooms Classrooms TV viewing
FM Transmitter: Flashlight-sized worn by speaker. Receiver: With personal hearing aid via DAI or induction neck-loop and telecoil; or self-contained with earphone(s).	Highly portable Different channels allow use by different groups within the same room. High user mobility Variable for large range of hearing losses.	High cost of receivers Equipment fragile Equipment obtrusive High maintenance Expensive to maintain Custom fitting to individual user may be required.	Classrooms Tour groups Meeting areas Outdoor events One-on-one
Infrared Transmitter: Emitter in line-of-sight with receiver. Receiver: Self-contained. Or with personal hearing aid via DAI or induction neckloop and telecoil.	Easy to use Insures privacy or confidentiality Moderate cost Can often be integrated into existing public address system.	Line-of-sight required between emitter and receiver. Ineffective outdoors Limited portability Requires installation	Theaters Churches and Temples Auditoriums Meetings requiring confidentiality TV viewing

Source: Rehab Brief, National Institute on Disability and Rehabilitation Research, Washington, DC, Vol. XII, No. 10, (1990).

A16

A4.33.6 Placement of Listening Systems. A distance of 50 ft (15 m) allows a person to distinguish performers' facial expressions.

A4.33.7 Types of Listening Systems. *An assistive listening system appropriate for an assembly area for a group of persons or where the specific individuals are not known in advance, such as a playhouse, lecture hall or movie theater, may be different from the system appropriate for a particular individual provided as an auxiliary aid or as part of a reasonable accommodation. The appropriate device for an individual is the type that individual can use, whereas the appropriate system for an assembly area will necessarily be geared toward the "average" or aggregate needs of various individuals.* A listening system that can be used from any seat in a seating area is the most flexible way to meet this specification. Earphone jacks with variable volume controls can benefit only people who have slight hearing loss and do not help people who use hearing aids. At the present time, *magnetic induction* loops are the most feasible type of listening system for people who use hearing aids *equipped with "T-coils,"* but people without hearing aids or those with hearing aids not equipped with inductive pick-ups cannot use them *without special receivers.* Radio frequency systems can be extremely effective and inexpensive. People without hearing aids can use them, but people with hearing aids need a special receiver to use them as they are presently designed. If hearing aids had a jack to allow a by-pass of microphones, then radio frequency systems would be suitable for people with and without hearing aids. Some listening systems may be subject to interference from other equipment and feedback from hearing aids of people who are using the systems. Such interference can be controlled by careful engineering design that anticipates feedback sources in the surrounding area.

Table A2, reprinted from a National Institute of Disability and Rehabilitation Research "Rehab Brief," shows some of the advantages and disadvantages of different types of assistive listening systems. In addition, the Architectural and Transportation Barriers Compliance Board (Access Board) has published a pamphlet on Assistive Listening Systems which lists demonstration centers across the country where technical assistance can be obtained in selecting and installing appropriate systems. The state of New York has also adopted a detailed technical specification which may be useful.

A5.0 Restaurants and Cafeterias.

A5.1 General. *Dining counters (where there is no service) are typically found in small carry-out restaurants, bakeries, or coffee shops and may only be a narrow eating surface attached to a wall. This section requires that where such a dining counter is provided, a portion of the counter shall be at the required accessible height.*

A7.0 Business and Mercantile.

A7.2(3) Assistive Listening Devices. *At all sales and service counters, teller windows, box offices, and information kiosks where a physical barrier separates service personnel and customers, it is recommended that at least one permanently installed assistive listening device complying with 4.33 be provided at each location or series. Where assistive listening devices are installed, signage should be provided identifying those stations which are so equipped.*

A7.3 Check-out Aisles. *Section 7.2 refers to counters without aisles; section 7.3 concerns check-out aisles. A counter without an aisle (7.2) can be approached from more than one direction such as in a convenience store. In order to use a check-out aisle (7.3), customers must enter a defined area (an aisle) at a particular point, pay for goods, and exit at a particular point.*

A10.3 Fixed Facilities and Stations.

A10.3.1(7) Route Signs. *One means of making control buttons on fare vending machines usable by persons with vision impairments is to raise them above the surrounding surface. Those activated by a mechanical motion are likely to be more detectable. If farecard vending, collection, and adjustment devices are designed to accommodate farecards having one tactually distinctive corner, then a person who has a vision impairment will insert the card with greater ease. Token collection devices that are designed to accommodate tokens which are perforated can allow a person to distinguish more readily between tokens and common coins. Thoughtful placement of accessible gates and fare vending machines in relation to inaccessible devices will make their use and detection easier for all persons with disabilities.*

[56 FR 35592, July 26, 1991, as amended by Order No. 1679–93, 58 FR 17522, Apr. 5, 1993; Order No. 1836–94, 59 FR 2675, Jan. 18, 1994]

APPENDIX B TO PART 36—PREAMBLE TO REGULATION ON NONDISCRIMINATION ON THE BASIS OF DISABILITY BY PUBLIC ACCOMMODATIONS AND IN COMMERCIAL FACILITIES (PUBLISHED JULY 26, 1991)

NOTE: For the convenience of the reader, this appendix contains the text of the preamble to the final regulation on nondiscrimination on the basis of disability by public accommodations and in commercial facilities beginning at the heading "Section-by-Section Analysis and Response to Comments" and ending before "List of Subjects in 28 CFR part 36" (56 FR 35546, July 26, 1991).

SECTION-BY-SECTION ANALYSIS AND RESPONSE TO COMMENTS

Subpart A—General

Section 36.101 Purpose

Section 36.101 states the purpose of the rule, which is to effectuate title III of the Americans with Disabilities Act of 1990. This title prohibits discrimination on the basis of disability by public accommodations, requires places of public accommodation and commercial facilities to be designed, constructed, and altered in compliance with the accessibility standards established by this part, and requires that examinations or courses related to licensing or certification for professional or trade purposes be accessible to persons with disabilities.

Section 36.102 Application

Section 36.102 specifies the range of entities and facilities that have obligations under the final rule. The rule applies to any public accommodation or commercial facility as those terms are defined in §36.104. It also applies, in accordance with section 309 of the ADA, to private entities that offer examinations or courses related to applications, licensing, certification, or credentialing for secondary or postsecondary education, professional, or trade purposes. Except as provided in §36.206, "Retaliation or coercion," this part does not apply to individuals other than public accommodations or to public entities. Coverage of private individuals and public entities is discussed in the preamble to §36.206.

As defined in §36.104, a public accommodation is a private entity that owns, leases or leases to, or operates a place of public accommodation. Section 36.102(b)(2) emphasizes that the general and specific public accommodations requirements of subparts B and C obligate a public accommodation only with respect to the operations of a place of public accommodation. This distinction is drawn in recognition of the fact that a private entity that meets the regulatory definition of public accommodation could also own, lease or lease to, or operate facilities that are not places of public accommodation. The rule would exceed the reach of the ADA if it were to apply the public accommodations requirements of subparts B and C to the operations of a private entity that do not involve a place of public accommodation. Similarly, §36.102(b)(3) provides that the new construction and alterations requirements of subpart D obligate a public accommodation only with respect to facilities used as, or designed or constructed for use as, places of public accommodation or commercial facilities.

On the other hand, as mandated by the ADA and reflected in §36.102(c), the new construction and alterations requirements of subpart D apply to a commercial facility whether or not the facility is a place of public accommodation, or is owned, leased, leased to, or operated by a public accommodation.

Section 36.102(e) states that the rule does not apply to any private club, religious entity, or public entity. Each of these terms is defined in §36.104. The exclusion of private clubs and religious entities is derived from section 307 of the ADA; and the exclusion of public entities is based on the statutory definition of public accommodation in section 301(7) of the ADA, which excludes entities other than private entities from coverage under title III of the ADA.

Section 36.103 Relationship to Other Laws

Section 36.103 is derived from sections 501 (a) and (b) of the ADA. Paragraph (a) provides that, except as otherwise specifically provided by this part, the ADA is not intended to apply lesser standards than are required under title V of the Rehabilitation Act of 1973, as amended (29 U.S.C. 790–794), or the regulations implementing that title. The standards of title V of the Rehabilitation Act apply for purposes of the ADA to the extent that the ADA has not explicitly adopted a different standard from title V. Where the ADA explicitly provides a different standard from section 504, the ADA standard applies to the ADA, but not to section 504. For example, section 504 requires that all federally assisted programs and activities be readily accessible to and usable by individuals with handicaps, even if major structural alterations are necessary to make a program accessible. Title III of the ADA, in contrast, only requires alterations to existing facilities if the modifications are "readily achievable," that is, able to be accomplished easily and without much difficulty or expense. A public accommodation that is covered under both section 504 and the ADA is still required to meet the "program accessibility" standard in order to comply with section 504, but would not be in violation of the ADA unless

it failed to make "readily achievable" modifications. On the other hand, an entity covered by the ADA is required to make "readily achievable" modifications, even if the program can be made accessible without any architectural modifications. Thus, an entity covered by both section 504 and title III of the ADA must meet both the "program accessibility" requirement and the "readily achievable" requirement.

Paragraph (b) makes explicit that the rule does not affect the obligation of recipients of Federal financial assistance to comply with the requirements imposed under section 504 of the Rehabilitation Act of 1973.

Paragraph (c) makes clear that Congress did not intend to displace any of the rights or remedies provided by other Federal laws or other State or local laws (including State common law) that provide greater or equal protection to individuals with disabilities. A plaintiff may choose to pursue claims under a State law that does not confer greater substantive rights, or even confers fewer substantive rights, if the alleged violation is protected under the alternative law and the remedies are greater. For example, assume that a person with a physical disability seeks damages under a State law that allows compensatory and punitive damages for discrimination on the basis of physical disability, but does not allow them on the basis of mental disability. In that situation, the State law would provide narrower coverage, by excluding mental disabilities, but broader remedies, and an individual covered by both laws could choose to bring an action under both laws. Moreover, State tort claims confer greater remedies and are not preempted by the ADA. A plaintiff may join a State tort claim to a case brought under the ADA. In such a case, the plaintiff must, of course, prove all the elements of the State tort claim in order to prevail under that cause of action.

A commenter had concerns about privacy requirements for banking transactions using telephone relay services. Title IV of the Act provides adequate protections for ensuring the confidentiality of communications using the relay services. This issue is more appropriately addressed by the Federal Communications Commission in its regulation implementing title IV of the Act.

Section 36.104 Definitions

"Act." The word "Act" is used in the regulation to refer to the Americans with Disabilities Act of 1990, Pub. L. 101–336, which is also referred to as the "ADA."

"Commerce." The definition of "commerce" is identical to the statutory definition provided in section 301(l) of the ADA. It means travel, trade, traffic, commerce, transportation, or communication among the several States, between any foreign country or any territory or possession and any State, or between points in the same State but through another State or foreign country. Commerce is defined in the same manner as in title II of the Civil Rights Act of 1964, which prohibits racial discrimination in public accommodations.

The term "commerce" is used in the definition of "place of public accommodation." According to that definition, one of the criteria that an entity must meet before it can be considered a place of public accommodation is that its operations affect commerce. The term "commerce" is similarly used in the definition of "commercial facility."

The use of the phrase "operations affect commerce" applies the full scope of coverage of the Commerce Clause of the Constitution in enforcing the ADA. The Constitution gives Congress broad authority to regulate interstate commerce, including the activities of local business enterprises (e.g., a physician's office, a neighborhood restaurant, a laundromat, or a bakery) that affect interstate commerce through the purchase or sale of products manufactured in other States, or by providing services to individuals from other States. Because of the integrated nature of the national economy, the ADA and this final rule will have extremely broad application.

"Commercial facilities" are those facilities that are intended for nonresidential use by a private entity and whose operations affect commerce. As explained under §36.401, "New construction," the new construction and alteration requirements of subpart D of the rule apply to all commercial facilities, whether or not they are places of public accommodation. Those commercial facilities that are not places of public accommodation are not subject to the requirements of subparts B and C (e.g., those requirements concerning auxiliary aids and general nondiscrimination provisions).

Congress recognized that the employees within commercial facilities would generally be protected under title I (employment) of the Act. However, as the House Committee on Education and Labor pointed out, "[t]o the extent that new facilities are built in a manner that make[s] them accessible to all individuals, including potential employees, there will be less of a need for individual employers to engage in reasonable accommodations for particular employees." H.R. Rep. No. 485, 101st Cong., 2d Sess., pt. 2, at 117 (1990) [hereinafter "Education and Labor report"]. While employers of fewer than 15 employees are not covered by title I's employment discrimination provisions, there is no such limitation with respect to new construction covered under title III. Congress chose not to so limit the new construction provisions because of its desire for a uniform requirement of accessibility in new construction, because accessibility can be accomplished easily in the design and construction

stage, and because future expansion of a business or sale or lease of the property to a larger employer or to a business that is a place of public accommodation is always a possibility.

The term "commercial facilities" is not intended to be defined by dictionary or common industry definitions. Included in this category are factories, warehouses, office buildings, and other buildings in which employment may occur. The phrase, "whose operations affect commerce," is to be read broadly, to include all types of activities reached under the commerce clause of the Constitution.

Privately operated airports are also included in the category of commercial facilities. They are not, however, places of public accommodation because they are not terminals used for "specified public transportation." (Transportation by aircraft is specifically excluded from the statutory definition of "specified public transportation.") Thus, privately operated airports are subject to the new construction and alteration requirements of this rule (subpart D) but not to subparts B and C. (Airports operated by public entities are covered by title II of the Act.) Places of public accommodation located within airports, such as restaurants, shops, lounges, or conference centers, however, are covered by subparts B and C of this part.

The statute's definition of "commercial facilities" specifically includes only facilities "that are intended for nonresidential use" and specifically exempts those facilities that are covered or expressly exempted from coverage under the Fair Housing Act of 1968, as amended (42 U.S.C. 3601–3631). The interplay between the Fair Housing Act and the ADA with respect to those facilities that are "places of public accommodation" was the subject of many comments and is addressed in the preamble discussion of the definition of "place of public accommodation."

"Current illegal use of drugs." The phrase "current illegal use of drugs" is used in §36.209. Its meaning is discussed in the preamble for that section.

"Disability." The definition of the term "disability" is comparable to the definition of the term "individual with handicaps" in section 7(8)(B) of the Rehabilitation Act and section 802(h) of the Fair Housing Act. The Education and Labor Committee report makes clear that the analysis of the term "individual with handicaps" by the Department of Health, Education, and Welfare in its regulations implementing section 504 (42 FR 22685 (May 4, 1977)) and the analysis by the Department of Housing and Urban Development in its regulation implementing the Fair Housing Amendments Act of 1988 (54 FR 3232 (Jan. 23, 1989)) should also apply fully to the term "disability" (Education and Labor report at 50).

The use of the term "disability" instead of "handicap" and the term "individual with a disability" instead of "individual with handicaps" represents an effort by the Congress to make use of up-to-date, currently accepted terminology. The terminology applied to individuals with disabilities is a very significant and sensitive issue. As with racial and ethnic terms, the choice of words to describe a person with a disability is overlaid with stereotypes, patronizing attitudes, and other emotional connotations. Many individuals with disabilities, and organizations representing such individuals, object to the use of such terms as "handicapped person" or "the handicapped." In other recent legislation, Congress also recognized this shift in terminology, e.g., by changing the name of the National Council on the Handicapped to the National Council on Disability (Pub. L. 100–630).

In enacting the Americans with Disabilities Act, Congress concluded that it was important for the current legislation to use terminology most in line with the sensibilities of most Americans with disabilities. No change in definition or substance is intended nor should be attributed to this change in phraseology.

The term "disability" means, with respect to an individual—

(A) A physical or mental impairment that substantially limits one or more of the major life activities of such individual;

(B) A record of such an impairment; or

(C) Being regarded as having such an impairment.

If an individual meets any one of these three tests, he or she is considered to be an individual with a disability for purposes of coverage under the Americans with Disabilities Act.

Congress adopted this same basic definition of "disability," first used in the Rehabilitation Act of 1973 and in the Fair Housing Amendments Act of 1988, for a number of reasons. It has worked well since it was adopted in 1974. There is a substantial body of administrative interpretation and judicial precedent on this definition. Finally, it would not be possible to guarantee comprehensiveness by providing a list of specific disabilities, especially because new disorders may be recognized in the future, as they have since the definition was first established in 1974.

Test A—A Physical or Mental Impairment That Substantially Limits One or More of the Major Life Activities of Such Individual

Physical or mental impairment. Under the first test, an individual must have a physical or mental impairment. As explained in paragraph (1) (i) of the definition, "impairment" means any physiological disorder or condition, cosmetic disfigurement, or anatomical loss affecting one or more of the following

body systems: Neurological; musculoskeletal; special sense organs (including speech organs that are not respiratory, such as vocal cords, soft palate, and tongue); respiratory, including speech organs; cardiovascular; reproductive; digestive; genitourinary; hemic and lymphatic; skin; and endocrine. It also means any mental or psychological disorder, such as mental retardation, organic brain syndrome, emotional or mental illness, and specific learning disabilities. This list closely tracks the one used in the regulations for section 504 of the Rehabilitation Act of 1973 (see, *e.g.*, 45 CFR 84.3(j)(2)(i)).

Many commenters asked that "traumatic brain injury" be added to the list in paragraph (1)(i). Traumatic brain injury is already included because it is a physiological condition affecting one of the listed body systems, i.e., "neurological." Therefore, it was unnecessary for the Department to add the term to the regulation.

It is not possible to include a list of all the specific conditions, contagious and noncontagious diseases, or infections that would constitute physical or mental impairments because of the difficulty of ensuring the comprehensiveness of such a list, particularly in light of the fact that other conditions or disorders may be identified in the future. However, the list of examples in paragraph (1)(iii) of the definition includes: Orthopedic, visual, speech and hearing impairments; cerebral palsy; epilepsy, muscular dystrophy, multiple sclerosis, cancer, heart disease, diabetes, mental retardation, emotional illness, specific learning disabilities, HIV disease (symptomatic or asymptomatic), tuberculosis, drug addiction, and alcoholism.

The examples of "physical or mental impairments" in paragraph (1)(iii) are the same as those contained in many section 504 regulations, except for the addition of the phrase "contagious and noncontagious" to describe the types of diseases and conditions included, and the addition of "HIV disease (symptomatic or asymptomatic)" and "tuberculosis" to the list of examples. These additions are based on the ADA committee reports, caselaw, and official legal opinions interpreting section 504. In *School Board of Nassau County* v. *Arline*, 480 U.S. 273 (1987), a case involving an individual with tuberculosis, the Supreme Court held that people with contagious diseases are entitled to the protections afforded by section 504. Following the *Arline* decision, this Department's Office of Legal Counsel issued a legal opinion that concluded that symptomatic HIV disease is an impairment that substantially limits a major life activity; therefore it has been included in the definition of disability under this part. The opinion also concluded that asymptomatic HIV disease is an impairment that substantially limits a major life activity, either because of its actual effect on the individual with HIV disease or because the reactions of other people to individuals with HIV disease cause such individuals to be treated as though they are disabled. See Memorandum from Douglas W. Kmiec, Acting Assistant Attorney General, Office of Legal Counsel, Department of Justice, to Arthur B. Culvahouse, Jr., Counsel to the President (Sept. 27, 1988), *reprinted in* Hearings on S. 933, the Americans with Disabilities Act, Before the Subcomm. on the Handicapped of the Senate Comm. on Labor and Human Resources, 101st Cong., 1st Sess. 346 (1989). The phrase "symptomatic or asymptomatic" was inserted in the final rule after "HIV disease" in response to commenters who suggested that the clarification was necessary to give full meaning to the Department's opinion.

Paragraph (1)(iv) of the definition states that the phrase "physical or mental impairment" does not include homosexuality or bisexuality. These conditions were never considered impairments under other Federal disability laws. Section 511(a) of the statute makes clear that they are likewise not to be considered impairments under the Americans with Disabilities Act.

Physical or mental impairment does not include simple physical characteristics, such as blue eyes or black hair. Nor does it include environmental, cultural, economic, or other disadvantages, such as having a prison record, or being poor. Nor is age a disability. Similarly, the definition does not include common personality traits such as poor judgment or a quick temper where these are not symptoms of a mental or psychological disorder. However, a person who has these characteristics and also has a physical or mental impairment may be considered as having a disability for purposes of the Americans with Disabilities Act based on the impairment.

Substantial limitation of a major life activity. Under Test A, the impairment must be one that "substantially limits a major life activity." Major life activities include such things as caring for one's self, performing manual tasks, walking, seeing, hearing, speaking, breathing, learning, and working. For example, a person who is paraplegic is substantially limited in the major life activity of walking, a person who is blind is substantially limited in the major life activity of seeing, and a person who is mentally retarded is substantially limited in the major life activity of learning. A person with traumatic brain injury is substantially limited in the major life activities of caring for one's self, learning, and working because of memory deficit, confusion, contextual difficulties, and inability to reason appropriately.

A person is considered an individual with a disability for purposes of Test A, the first prong of the definition, when the individual's important life activities are restricted as to

the conditions, manner, or duration under which they can be performed in comparison to most people. A person with a minor, trivial impairment, such as a simple infected finger, is not impaired in a major life activity. A person who can walk for 10 miles continuously is not substantially limited in walking merely because, on the eleventh mile, he or she begins to experience pain, because most people would not be able to walk eleven miles without experiencing some discomfort.

The Department received many comments on the proposed rule's inclusion of the word "temporary" in the definition of "disability." The preamble indicated that impairments are not necessarily excluded from the definition of "disability" simply because they are temporary, but that the duration, or expected duration, of an impairment is one factor that may properly be considered in determining whether the impairment substantially limits a major life activity. The preamble recognized, however, that temporary impairments, such as a broken leg, are not commonly regarded as disabilities, and only in rare circumstances would the degree of the limitation and its expected duration be substantial: Nevertheless, many commenters objected to inclusion of the word "temporary" both because it is not in the statute and because it is not contained in the definition of "disability" set forth in the title I regulations of the Equal Employment Opportunity Commission (EEOC). The word "temporary" has been deleted from the final rule to conform with the statutory language. The question of whether a temporary impairment is a disability must be resolved on a case-by-case basis, taking into consideration both the duration (or expected duration) of the impairment and the extent to which it actually limits a major life activity of the affected individual.

The question of whether a person has a disability should be assessed without regard to the availability of mitigating measures, such as reasonable modifications or auxiliary aids and services. For example, a person with hearing loss is substantially limited in the major life activity of hearing, even though the loss may be improved through the use of a hearing aid. Likewise, persons with impairments, such as epilepsy or diabetes, that substantially limit a major life activity, are covered under the first prong of the definition of disability, even if the effects of the impairment are controlled by medication.

Many commenters asked that environmental illness (also known as multiple chemical sensitivity) as well as allergy to cigarette smoke be recognized as disabilities. The Department, however, declines to state categorically that these types of allergies or sensitivities are disabilities, because the determination as to whether an impairment is a disability depends on whether, given the particular circumstances at issue, the impairment substantially limits one or more major life activities (or has a history of, or is regarded as having such an effect).

Sometimes respiratory or neurological functioning is so severely affected that an individual will satisfy the requirements to be considered disabled under the regulation. Such an individual would be entitled to all of the protections afforded by the Act and this part. In other cases, individuals may be sensitive to environmental elements or to smoke but their sensitivity will not rise to the level needed to constitute a disability. For example, their major life activity of breathing may be somewhat, but not substantially, impaired. In such circumstances, the individuals are not disabled and are not entitled to the protections of the statute despite their sensitivity to environmental agents.

In sum, the determination as to whether allergies to cigarette smoke, or allergies or sensitivities characterized by the commenters as environmental illness are disabilities covered by the regulation must be made using the same case-by-case analysis that is applied to all other physical or mental impairments. Moreover, the addition of specific regulatory provisions relating to environmental illness in the final rule would be inappropriate at this time pending future consideration of the issue by the Architectural and Transportation Barriers Compliance Board, the Environmental Protection Agency, and the Occupational Safety and Health Administration of the Department of Labor.

Test B—A Record of Such an Impairment

This test is intended to cover those who have a record of an impairment. As explained in paragraph (3) of the rule's definition of disability, this includes a person who has a history of an impairment that substantially limited a major life activity, such as someone who has recovered from an impairment. It also includes persons who have been misclassified as having an impairment.

This provision is included in the definition in part to protect individuals who have recovered from a physical or mental impairment that previously substantially limited them in a major life activity. Discrimination on the basis of such a past impairment is prohibited. Frequently occurring examples of the first group (those who have a history of an impairment) are persons with histories of mental or emotional illness, heart disease, or cancer; examples of the second group (those who have been misclassified as having an impairment) are persons who have been misclassified as having mental retardation or mental illness.

Test C—Being Regarded as Having Such an Impairment

This test, as contained in paragraph (4) of the definition, is intended to cover persons who are treated by a private entity or public accommodation as having a physical or mental impairment that substantially limits a major life activity. It applies when a person is treated as if he or she has an impairment that substantially limits a major life activity, regardless of whether that person has an impairment.

The Americans with Disabilities Act uses the same "regarded as" test set forth in the regulations implementing section 504 of the Rehabilitation Act. *See, e.g.,* 28 CFR 42.540(k)(2)(iv), which provides:

(iv) "Is regarded as having an impairment" means (A) Has a physical or mental impairment that does not substantially limit major life activities but that is treated by a recipient as constituting such a limitation; (B) Has a physical or mental impairment that substantially limits major life activities only as a result of the attitudes of others toward such impairment; or (C) Has none of the impairments defined in paragraph (k)(2)(i) of this section but is treated by a recipient as having such an impairment.

The perception of the private entity or public accommodation is a key element of this test. A person who perceives himself or herself to have an impairment, but does not have an impairment, and is not treated as if he or she has an impairment, is not protected under this test. A person would be covered under this test if a restaurant refused to serve that person because of a fear of "negative reactions" of others to that person. A person would also be covered if a public accommodation refused to serve a patron because it perceived that the patron had an impairment that limited his or her enjoyment of the goods or services being offered.

For example, persons with severe burns often encounter discrimination in community activities, resulting in substantial limitation of major life activities. These persons would be covered under this test based on the attitudes of others towards the impairment, even if they did not view themselves as "impaired."

The rationale for this third test, as used in the Rehabilitation Act of 1973, was articulated by the Supreme Court in *Arline,* 480 U.S. 273 (1987). The Court noted that, although an individual may have an impairment that does not in fact substantially limit a major life activity, the reaction of others may prove just as disabling. "Such an impairment might not diminish a person's physical or mental capabilities, but could nevertheless substantially limit that person's ability to work as a result of the negative reactions of others to the impairment." *Id.* at 283. The Court concluded that, by including this test in the Rehabilitation Act's definition, "Congress acknowledged that society's accumulated myths and fears about disability and disease are as handicapping as are the physical limitations that flow from actual impairment." *Id.* at 284.

Thus, a person who is not allowed into a public accommodation because of the myths, fears, and stereotypes associated with disabilities would be covered under this third test whether or not the person's physical or mental condition would be considered a disability under the first or second test in the definition.

If a person is refused admittance on the basis of an actual or perceived physical or mental condition, and the public accommodation can articulate no legitimate reason for the refusal (such as failure to meet eligibility criteria), a perceived concern about admitting persons with disabilities could be inferred and the individual would qualify for coverage under the "regarded as" test. A person who is covered because of being regarded as having an impairment is not required to show that the public accommodation's perception is inaccurate (e.g., that he will be accepted by others, or that insurance rates will not increase) in order to be admitted to the public accommodation.

Paragraph (5) of the definition lists certain conditions that are not included within the definition of "disability." The excluded conditions are: transvestism, transsexualism, pedophilia, exhibitionism, voyeurism, gender identity disorders not resulting from physical impairments, other sexual behavior disorders, compulsive gambling, kleptomania, pyromania, and psychoactive substance use disorders resulting from current illegal use of drugs. Unlike homosexuality and bisexuality, which are not considered impairments under either the Americans with Disabilities Act (see the definition of "disability," paragraph (1)(iv)) or section 504, the conditions listed in paragraph (5), except for transvestism, are not necessarily excluded as impairments under section 504. (Transvestism was excluded from the definition of disability for section 504 by the Fair Housing Amendments Act of 1988, Pub. L. 100–430, §6(b).) The phrase "current illegal use of drugs" used in this definition is explained in the preamble to §36.209.

"Drug." The definition of the term "drug" is taken from section 510(d)(2) of the ADA.

"Facility." "Facility" means all or any portion of buildings, structures, sites, complexes, equipment, rolling stock or other conveyances, roads, walks, passageways, parking lots, or other real or personal property, including the site where the building, property, structure, or equipment is located. Committee reports made clear that the definition of facility was drawn from the definition of facility in current Federal regulations (*see, e.g.,* Education and Labor report

at 114). It includes both indoor and outdoor areas where human-constructed improvements, structures, equipment, or property have been added to the natural environment.

The term "rolling stock or other conveyances" was not included in the definition of facility in the proposed rule. However, commenters raised questions about the applicability of this part to places of public accommodation operated in mobile facilities (such as cruise ships, floating restaurants, or mobile health units). Those places of public accommodation are covered under this part, and would be included in the definition of "facility." Thus the requirements of subparts B and C would apply to those places of public accommodation. For example, a covered entity could not discriminate on the basis of disability in the full and equal enjoyment of the facilities (§36.201). Similarly, a cruise line could not apply eligibility criteria to potential passengers in a manner that would screen out individuals with disabilities, unless the criteria are "necessary," as provided in §36.301.

However, standards for new construction and alterations of such facilities are not yet included in the Americans with Disabilities Act Accessibility Guidelines for Buildings and Facilities (ADAAG) adopted by §36.406 and incorporated in appendix A. The Department therefore will not interpret the new construction and alterations provisions of subpart D to apply to the types of facilities discussed here, pending further development of specific requirements.

Requirements pertaining to accessible transportation services provided by public accommodations are included in §36.310 of this part; standards pertaining to accessible vehicles will be issued by the Secretary of Transportation pursuant to section 306 of the Act, and will be codified at 49 CFR part 37.

A public accommodation has obligations under this rule with respect to a cruise ship to the extent that its operations are subject to the laws of the United States.

The definition of "facility" only includes the site over which the private entity may exercise control or on which a place of public accommodation or a commercial facility is located. It does not include, for example, adjacent roads or walks controlled by a public entity that is not subject to this part. Public entities are subject to the requirements of title II of the Act. The Department's regulation implementing title II, which will be codified at 28 CFR part 35, addresses the obligations of public entities to ensure accessibility by providing curb ramps at pedestrian walkways.

"Illegal use of drugs." The definition of "illegal use of drugs" is taken from section 510(d)(1) of the Act and clarifies that the term includes the illegal use of one or more drugs.

"Individual with a disability" means a person who has a disability but does not include an individual who is currently illegally using drugs, when the public accommodation acts on the basis of such use. The phrase "current illegal use of drugs" is explained in the preamble to §36.209.

"Place of public accommodation." The term "place of public accommodation" is an adaptation of the statutory definition of "public accommodation" in section 301(7) of the ADA and appears as an element of the regulatory definition of public accommodation. The final rule defines "place of public accommodation" as a facility, operated by a private entity, whose operations affect commerce and fall within at least one of 12 specified categories. The term "public accommodation," on the other hand, is reserved by the final rule for the private entity that owns, leases (or leases to), or operates a place of public accommodation. It is the public accommodation, and not the place of public accommodation, that is subject to the regulation's nondiscrimination requirements. Placing the obligation not to discriminate on the public accommodation, as defined in the rule, is consistent with section 302(a) of the ADA, which places the obligation not to discriminate on any person who owns, leases (or leases to), or operates a place of public accommodation.

Facilities operated by government agencies or other public entities as defined in this section do not qualify as places of public accommodation. The actions of public entities are governed by title II of the ADA and will be subject to regulations issued by the Department of Justice under that title. The receipt of government assistance by a private entity does not by itself preclude a facility from being considered as a place of public accommodation.

The definition of place of public accommodation incorporates the 12 categories of facilities represented in the statutory definition of public accommodation in section 301(7) of the ADA:

1. Places of lodging.
2. Establishments serving food or drink.
3. Places of exhibition or entertainment.
4. Places of public gathering.
5. Sales or rental establishments.
6. Service establishments.
7. Stations used for specified public transportation.
8. Places of public display or collection.
9. Places of recreation.
10. Places of education.
11. Social service center establishments.
12. Places of exercise or recreation.

In order to be a place of public accommodation, a facility must be operated by a private entity, its operations must affect commerce, and it must fall within one of these 12

categories. While the list of categories is exhaustive, the representative examples of facilities within each category are not. Within each category only a few examples are given. The category of social service center establishments would include not only the types of establishments listed, day care centers, senior citizen centers, homeless shelters, food banks, adoption agencies, but also establishments such as substance abuse treatment centers, rape crisis centers, and halfway houses. As another example, the category of sales or rental establishments would include an innumerable array of facilities that would sweep far beyond the few examples given in the regulation. For example, other retail or wholesale establishments selling or renting items, such as bookstores, videotape rental stores, car rental establishment, pet stores, and jewelry stores would also be covered under this category, even though they are not specifically listed.

Several commenters requested clarification as to the coverage of wholesale establishments under the category of "sales or rental establishments." The Department intends for wholesale establishments to be covered under this category as places of public accommodation except in cases where they sell exclusively to other businesses and not to individuals. For example, a company that grows food produce and supplies its crops exclusively to food processing corporations on a wholesale basis does not become a public accommodation because of these transactions. If this company operates a road side stand where its crops are sold to the public, the road side stand would be a sales establishment covered by the ADA. Conversely, a sales establishment that markets its goods as "wholesale to the public" and sells to individuals would not be exempt from ADA coverage despite its use of the word "wholesale" as a marketing technique.

Of course, a company that operates a place of public accommodation is subject to this part only in the operation of that place of public accommodation. In the example given above, the wholesale produce company that operates a road side stand would be a public accommodation only for the purposes of the operation of that stand. The company would be prohibited from discriminating on the basis of disability in the operation of the road side stand, and it would be required to remove barriers to physical access to the extent that it is readily achievable to do so (see §36.304); however, in the event that it is not readily achievable to remove barriers, for example, by replacing a gravel surface or regrading the area around the stand to permit access by persons with mobility impairments, the company could meet its obligations through alternative methods of making its goods available, such as delivering produce to a customer in his or her car (see §36.305). The concepts of readily achievable barrier removal and alternatives to barrier removal are discussed further in the preamble discussion of §§36.304 and 36.305.

Even if a facility does not fall within one of the 12 categories, and therefore does not qualify as a place of public accommodation, it still may be a commercial facility as defined in §36.104 and be subject to the new construction and alterations requirements of subpart D.

A number of commenters questioned the treatment of residential hotels and other residential facilities in the Department's proposed rule. These commenters were essentially seeking resolution of the relationship between the Fair Housing Act and the ADA concerning facilities that are both residential in nature and engage in activities that would cause them to be classified as "places of public accommodation" under the ADA. The ADA's express exemption relating to the Fair Housing Act applies only to "commercial facilities" and not to "places of public accommodation."

A facility whose operations affect interstate commerce is a place of public accommodation for purposes of the ADA to the extent that its operations include those types of activities engaged in or services provided by the facilities contained on the list of 12 categories in section 301(7) of the ADA. Thus, a facility that provides social services would be considered a "social service center establishment." Similarly, the category "places of lodging" would exclude solely residential facilities because the nature of a place of lodging contemplates the use of the facility for short-term stays.

Many facilities, however, are mixed use facilities. For example, in a large hotel that has a separate residential apartment wing, the residential wing would not be covered by the ADA because of the nature of the occupancy of that part of the facility. This residential wing would, however, be covered by the Fair Housing Act. The separate nonresidential accommodations in the rest of the hotel would be a place of lodging, and thus a public accommodation subject to the requirements of this final rule. If a hotel allows both residential and short-term stays, but does not allocate space for these different uses in separate, discrete units, both the ADA and the Fair Housing Act may apply to the facility. Such determinations will need to be made on a case-by-case basis. Any place of lodging of the type described in paragraph (1) of the definition of place of public accommodation and that is an establishment located within a building that contains not more than five rooms for rent or hire and is actually occupied by the proprietor of the establishment as his or her residence is not covered by the ADA. (This exclusion from coverage does not apply to other categories of public accommodations, for example, professional offices or homeless

shelters, that are located in a building that is also occupied as a private residence.)

A number of commenters noted that the term "residential hotel" may also apply to a type of hotel commonly known as a "single room occupancy hotel." Although such hotels or portions of such hotels may fall under the Fair Housing Act when operated or used as long-term residences, they are also considered "places of lodging" under the ADA when guests of such hotels are free to use them on a short-term basis. In addition, "single room occupancy hotels" may provide social services to their guests, often through the operation of Federal or State grant programs. In such a situation, the facility would be considered a "social service center establishment" and thus covered by the ADA as a place of public accommodation, regardless of the length of stay of the occupants.

A similar analysis would also be applied to other residential facilities that provide social services, including homeless shelters, shelters for people seeking refuge from domestic violence, nursing homes, residential care facilities, and other facilities where persons may reside for varying lengths of time. Such facilities should be analyzed under the Fair Housing Act to determine the application of that statute. The ADA, however, requires a separate and independent analysis. For example, if the facility, or a portion of the facility, is intended for or permits short-term stays, or if it can appropriately be categorized as a service establishment or as a social service establishment, then the facility or that portion of the facility used for the covered purpose is a place of public accommodation under the ADA. For example, a homeless shelter that is intended and used only for long-term residential stays and that does not provide social services to its residents would not be covered as a place of public accommodation. However, if this facility permitted short-term stays or provided social services to its residents, it would be covered under the ADA either as a "place of lodging" or as a "social service center establishment," or as both.

A private home, by itself, does not fall within any of the 12 categories. However, it can be covered as a place of public accommodation to the extent that it is used as a facility that would fall within one of the 12 categories. For example, if a professional office of a dentist, doctor, or psychologist is located in a private home, the portion of the home dedicated to office use (including areas used both for the residence and the office, e.g., the entrance to the home that is also used as the entrance to the professional office) would be considered a place of public accommodation. Places of public accommodation located in residential facilities are specifically addressed in §36.207.

If a tour of a commercial facility that is not otherwise a place of public accommodation, such as, for example, a factory or a movie studio production set, is open to the general public, the route followed by the tour is a place of public accommodation and the tour must be operated in accordance with the rule's requirements for public accommodations. The place of public accommodation defined by the tour does not include those portions of the commercial facility that are merely viewed from the tour route. Hence, the barrier removal requirements of §36.304 only apply to the physical route followed by the tour participants and not to work stations or other areas that are merely adjacent to, or within view of, the tour route. If the tour is not open to the general public, but rather is conducted, for example, for selected business colleagues, partners, customers, or consultants, the tour route is not a place of public accommodation and the tour is not subject to the requirements for public accommodations.

Public accommodations that receive Federal financial assistance are subject to the requirements of section 504 of the Rehabilitation Act as well as the requirements of the ADA.

Private schools, including elementary and secondary schools, are covered by the rule as places of public accommodation. The rule itself, however, does not require a private school to provide a free appropriate education or develop an individualized education program in accordance with regulations of the Department of Education implementing section 504 of the Rehabilitation Act of 1973, as amended (34 CFR part 104), and regulations implementing the Individuals with Disabilities Education Act (34 CFR part 300). The receipt of Federal assistance by a private school, however, would trigger application of the Department of Education's regulations to the extent mandated by the particular type of assistance received.

"Private club." The term "private club" is defined in accordance with section 307 of the ADA as a private club or establishment exempted from coverage under title II of the Civil Rights Act of 1964. Title II of the 1964 Act exempts any "private club or other establishment not in fact open to the public, except to the extent that the facilities of such establishment are made available to the customers or patrons of [a place of public accommodation as defined in title II]." The rule, therefore, as reflected in §36.102(e) of the application section, limits the coverage of private clubs accordingly. The obligations of a private club that rents space to any other private entity for the operation of a place of public accommodation are discussed further in connection with §36.201.

In determining whether a private entity qualifies as a private club under title II, courts have considered such factors as the degree of member control of club operations, the selectivity of the membership selection

process, whether substantial membership fees are charged, whether the entity is operated on a nonprofit basis, the extent to which the facilities are open to the public, the degree of public funding, and whether the club was created specifically to avoid compliance with the Civil Rights Act. See *e.g., Tillman* v. *Wheaton-Haven Recreation Ass'n,* 410 U.S. 431 (1973); *Daniel* v. *Paul,* 395 U.S. 298 (1969); *Olzman* v. *Lake Hills Swim Club, Inc.,* 495 F.2d 1333 (2d Cir. 1974); *Anderson* v. *Pass Christian Isles Golf Club, Inc.,* 488 F.2d 855 (5th Cir. 1974); *Smith* v. *YMCA,* 462 F.2d 634 (5th Cir. 1972); *Stout* v. *YMCA,* 404 F.2d 687 (5th Cir. 1968); *United States* v. *Richberg,* 398 F.2d 523 (5th Cir. 1968); *Nesmith* v. *YMCA,* 397 F.2d 96 (4th Cir. 1968); *United States* v. *Lansdowne Swim Club,* 713 F. Supp. 785 (E.D. Pa. 1989); *Durham* v. *Red Lake Fishing and Hunting Club, Inc.,* 666 F. Supp. 954 (W.D. Tex. 1987); *New York* v. *Ocean Club, Inc.,* 602 F. Supp. 489 (E.D.N.Y. 1984); *Brown* v. *Loudoun Golf and Country Club, Inc.,* 573 F. Supp. 399 (E.D. Va. 1983); *United States* v. *Trustees of Fraternal Order of Eagles,* 472 F. Supp. 1174 (E.D. Wis. 1979); *Cornelius* v. *Benevolent Protective Order of Elks,* 382 F. Supp. 1182 (D. Conn. 1974).

"Private entity." The term "private entity" is defined as any individual or entity other than a public entity. It is used as part of the definition of "public accommodation" in this section.

The definition adds "individual" to the statutory definition of private entity (see section 301(6) of the ADA). This addition clarifies that an individual may be a private entity and, therefore, may be considered a public accommodation if he or she owns, leases (or leases to), or operates a place of public accommodation. The explicit inclusion of individuals under the definition of private entity is consistent with section 302(a) of the ADA, which broadly prohibits discrimination on the basis of disability by any person who owns, leases (or leases to), or operates a place of public accommodation.

"Public accommodation." The term "public accommodation" means a private entity that owns, leases (or leases to), or operates a place of public accommodation. The regulatory term, "public accommodation," corresponds to the statutory term, "person," in section 302(a) of the ADA. The ADA prohibits discrimination "by any person who owns, leases (or leases to), or operates a place of public accommodation." The text of the regulation consequently places the ADA's nondiscrimination obligations on "public accommodations" rather than on "persons" or on "places of public accommodation."

As stated in §36.102(b)(2), the requirements of subparts B and C obligate a public accommodation only with respect to the operations of a place of public accommodation. A public accommodation must also meet the requirements of subpart D with respect to facilities used as, or designed or constructed for use as, places of public accommodation or commercial facilities.

"Public entity." The term "public entity" is defined in accordance with section 201(1) of the ADA as any State or local government; any department, agency, special purpose district, or other instrumentality of a State or States or local government; and the National Railroad Passenger Corporation, and any commuter authority (as defined in section 103(8) of the Rail Passenger Service Act). It is used in the definition of "private entity" in §36.104. Public entities are excluded from the definition of private entity and therefore cannot qualify as public accommodations under this regulation. However, the actions of public entities are covered by title II of the ADA and by the Department's title II regulations codified at 28 CFR part 35.

"Qualified interpreter." The Department received substantial comment regarding the lack of a definition of "qualified interpreter." The proposed rule defined auxiliary aids and services to include the statutory term, "qualified interpreters" (§36.303(b)), but did not define that term. Section 36.303 requires the use of a qualified interpreter where necessary to achieve effective communication, unless an undue burden or fundamental alteration would result. Commenters stated that a lack of guidance on what the term means would create confusion among those trying to secure interpreting services and often result in less than effective communication.

Many commenters were concerned that, without clear guidance on the issue of "qualified" interpreter, the rule would be interpreted to mean "available, rather than qualified" interpreters. Some claimed that few public accommodations would understand the difference between a qualified interpreter and a person who simply knows a few signs or how to fingerspell.

In order to clarify what is meant by "qualified interpreter" the Department has added a definition of the term to the final rule. A qualified interpreter means an interpreter who is able to interpret effectively, accurately, and impartially both receptively and expressively, using any necessary specialized vocabulary. This definition focuses on the actual ability of the interpreter in a particular interpreting context to facilitate effective communication between the public accommodation and the individual with disabilities.

Public comment also revealed that public accommodations have at times asked persons who are deaf to provide family members or friends to interpret. In certain circumstances, notwithstanding that the family member or friend is able to interpret or is a certified interpreter, the family member or friend may not be qualified to render the necessary interpretation because of factors such as emotional or personal involvement

or considerations of confidentiality that may adversely affect the ability to interpret "effectively, accurately, and impartially."

"Readily achievable." The definition of "readily achievable" follows the statutory definition of that term in section 301(9) of the ADA. Readily achievable means easily accomplishable and able to be carried out without much difficulty or expense. The term is used as a limitation on the obligation to remove barriers under §§36.304(a), 36.305(a), 36.308(a), and 36.310(b). Further discussion of the meaning and application of the term "readily achievable" may be found in the preamble section for §36.304.

The definition lists factors to be considered in determining whether barrier removal is readily achievable in any particular circumstance. A significant number of commenters objected to §36.306 of the proposed rule, which listed identical factors to be considered for determining "readily achievable" and "undue burden" together in one section. They asserted that providing a consolidated section blurred the distinction between the level of effort required by a public accommodation under the two standards. The readily achievable standard is a "lower" standard than the "undue burden" standard in terms of the level of effort required, but the factors used in determining whether an action is readily achievable or would result in an undue burden are identical (See Education and Labor report at 109). Although the preamble to the proposed rule clearly delineated the relationship between the two standards, to eliminate any confusion the Department has deleted §36.306 of the proposed rule. That section, in any event, as other commenters noted, had merely repeated the lists of factors contained in the definitions of readily achievable and undue burden.

The list of factors included in the definition is derived from section 301(9) of the ADA. It reflects the congressional intention that a wide range of factors be considered in determining whether an action is readily achievable. It also takes into account that many local facilities are owned or operated by parent corporations or entities that conduct operations at many different sites. This section makes clear that, in some instances, resources beyond those of the local facility where the barrier must be removed may be relevant in determining whether an action is readily achievable. One must also evaluate the degree to which any parent entity has resources that may be allocated to the local facility.

The statutory list of factors in section 301(9) of the Act uses the term "covered entity" to refer to the larger entity of which a particular facility may be a part. "Covered entity" is not a defined term in the ADA and is not used consistently throughout the Act. The definition, therefore, substitutes the term "parent entity" in place of "covered entity" in paragraphs (3), (4), and (5) when referring to the larger private entity whose overall resources may be taken into account. This usage is consistent with the House Judiciary Committee's use of the term "parent company" to describe the larger entity of which the local facility is a part (H.R. Rep. No. 485, 101st Cong., 2d Sess., pt. 3, at 40–41, 54–55 (1990) (hereinafter "Judiciary report")).

A number of commenters asked for more specific guidance as to when and how the resources of a parent corporation or entity are to be taken into account in determining what is readily achievable. The Department believes that this complex issue is most appropriately resolved on a case-by-case basis. As the comments reflect, there is a wide variety of possible relationships between the site in question and any parent corporation or other entity. It would be unwise to posit legal ramifications under the ADA of even generic relationships (e.g., banks involved in foreclosures or insurance companies operating as trustees or in other similar fiduciary relationships), because any analysis will depend so completely on the detailed fact situations and the exact nature of the legal relationships involved. The final rule does, however, reorder the factors to be considered. This shift and the addition of the phrase "if applicable" make clear that the line of inquiry concerning factors will start at the site involved in the action itself. This change emphasizes that the overall resources, size, and operations of the parent corporation or entity should be considered to the extent appropriate in light of "the geographic separateness, and the administrative or fiscal relationship of the site or sites in question to any parent corporation or entity."

Although some commenters sought more specific numerical guidance on the definition of readily achievable, the Department has declined to establish in the final rule any kind of numerical formula for determining whether an action is readily achievable. It would be difficult to devise a specific ceiling on compliance costs that would take into account the vast diversity of enterprises covered by the ADA's public accommodations requirements and the economic situation that any particular entity would find itself in at any moment. The final rule, therefore, implements the flexible case-by-case approach chosen by Congress.

A number of commenters requested that security considerations be explicitly recognized as a factor in determining whether a barrier removal action is readily achievable. The Department believes that legitimate safety requirements, including crime prevention measures, may be taken into account so long as they are based on actual risks and are necessary for safe operation of the public accommodation. This point has been included in the definition.

Some commenters urged the Department not to consider acts of barrier removal in complete isolation from each other in determining whether they are readily achievable. The Department believes that it is appropriate to consider the cost of other barrier removal actions as one factor in determining whether a measure is readily achievable.

"Religious entity." The term "religious entity" is defined in accordance with section 307 of the ADA as a religious organization or entity controlled by a religious organization, including a place of worship. Section 36.102(e) of the rule states that the rule does not apply to any religious entity.

The ADA's exemption of religious organizations and religious entities controlled by religious organizations is very broad, encompassing a wide variety of situations. Religious organizations and entities controlled by religious organizations have no obligations under the ADA. Even when a religious organization carries out activities that would othervise make it a public accommodation, the religious organization is exempt from ADA coverage. Thus, if a church itself operates a day care center, a nursing home, a private school, or a diocesan school system, the operations of the center, home, school, or schools would not be subject to the requirements of the ADA or this part. The religious entity would not lose its exemption merely because the services provided were open to the general public. The test is whether the church or other religious organization operates the public accommodation, not which individuals receive the public accommodation's services.

Religious entities that are controlled by religious organizations are also exempt from the ADA's requirements. Many religious organizations in the United States use lay boards and other secular or corporate mechanisms to operate schools and an array of social services. The use of a lay board or other mechanism does not itself remove the ADA's religious exemption. Thus, a parochial school, having religious doctrine in its curriculum and sponsored by a religious order, could be exempt either as a religious organization or as an entity controlled by a religious organization, even if it has a lay board. The test remains a factual one—whether the church or other religious organization controls the operations of the school or of the service or whether the school or service is itself a religious organization.

Although a religious organization or a religious entity that is controlled by a religious organization has no obligations under the rule, a public accommodation that is not itself a religious organization, but that operates a place of public accommodation in leased space on the property of a religious entity, which is not a place of worship, is subject to the rule's requirements if it is not under control of a religious organization. When a church rents meeting space, which is not a place of worship, to a local community group or to a private, independent day care center, the ADA applies to the activities of the local community group and day care center if a lease exists and consideration is paid.

"Service animal." The term "service animal" encompasses any guide dog, signal dog, or other animal individually trained to provide assistance to an individual with a disability. The term is used in §36.302(c), which requires public accommodations generally to modify policies, practices, and procedures to accommodate the use of service animals in places of public accommodation.

"Specified public transportation." The definition of "specified public transportation" is identical to the statutory definition in section 301(10) of the ADA. The term means transportation by bus, rail, or any other conveyance (other than by aircraft) that provides the general public with general or special service (including charter service) on a regular and continuing basis. It is used in category (7) of the definition of "place of public accommodation," which includes stations used for specified public transportation.

The effect of this definition, which excludes transportation by aircraft, is that it excludes privately operated airports from coverage as places of public accommodation. However, places of public accommodation located within airports would be covered by this part. Airports that are operated by public entities are covered by title II of the ADA and, if they are operated as part of a program receiving Federal financial assistance, by section 504 of the Rehabilitation Act. Privately operated airports are similarly covered by section 504 if they are operated as part of a program receiving Federal financial assistance. The operations of any portion of any airport that are under the control of an air carrier are covered by the Air Carrier Access Act. In addition, airports are covered as commercial facilities under this rule.

"State." The definition of "State" is identical to the statutory definition in section 3(3) of the ADA. The term is used in the definitions of "commerce" and "public entity" in §36.104.

"Undue burden." The definition of "undue burden" is analogous to the statutory definition of "undue hardship" in employment under section 101(10) of the ADA. The term undue burden means "significant difficulty or expense" and serves as a limitation on the obligation to provide auxiliary aids and services under §36.303 and §§36.309 (b)(3) and (c)(3). Further discussion of the meaning and application of the term undue burden may be found in the preamble discussion of §36.303.

The definition lists factors considered in determining whether provision of an auxiliary aid or service in any particular circumstance would result in an undue burden. The factors to be considered in determining

whether an action would result in an undue burden are identical to those to be considered in determining whether an action is readily achievable. However, "readily achievable" is a lower standard than "undue burden" in that it requires a lower level of effort on the part of the public accommodation (see Education and Labor report at 109).

Further analysis of the factors to be considered in determining undue burden may be found in the preamble discussion of the definition of the term "readily achievable."

Subpart B—General Requirements

Subpart B includes general prohibitions restricting a public accommodation from discriminating against people with disabilities by denying them the opportunity to benefit from goods or services, by giving them unequal goods or services, or by giving them different or separate goods or services. These general prohibitions are patterned after the basic, general prohibitions that exist in other civil rights laws that prohibit discrimination on the basis of race, sex, color, religion, or national origin.

Section 36.201 General

Section 36.201(a) contains the general rule that prohibits discrimination on the basis of disability in the full and equal enjoyment of goods, services, facilities, privileges, advantages, and accommodations of any place of public accommodation.

Full and equal enjoyment means the right to participate and to have an equal opportunity to obtain the same results as others to the extent possible with such accommodations as may be required by the Act and these regulations. It does not mean that an individual with a disability must achieve an identical result or level of achievement as persons without a disability. For example, an exercise class cannot exclude a person who uses a wheelchair because he or she cannot do all of the exercises and derive the same result from the class as persons without a disability.

Section 302(a) of the ADA states that the prohibition against discrimination applies to "any person who owns, leases (or leases to), or operates a place of public accommodation," and this language is reflected in §36.201(a). The coverage is quite extensive and would include sublessees, management companies, and any other entity that owns, leases, leases to, or operates a place of public accommodation, even if the operation is only for a short time.

The first sentence of paragraph (b) of §36.201 reiterates the general principle that both the landlord that owns the building that houses the place of public accommodation, as well as the tenant that owns or operates the place of public accommodation, are public accommodations subject to the requirements of this part. Although the statutory language could be interpreted as placing equal responsibility on all private entities, whether lessor, lessee, or operator of a public accommodation, the committee reports suggest that liability may be allocated. Section 36.201(b) of that section of the proposed rule attempted to allocate liability in the regulation itself. Paragraph (b)(2) of that section made a specific allocation of liability for the obligation to take readily achievable measures to remove barriers, and paragraph (b)(3) made a specific allocation for the obligation to provide auxiliary aids.

Numerous commenters pointed out that these allocations would not apply in all situations. Some asserted that paragraph (b)(2) of the proposed rule only addressed the situation when a lease gave the tenant the right to make alterations with permission of the landlord, but failed to address other types of leases, e.g., those that are silent on the right to make alterations, or those in which the landlord is not permitted to enter a tenant's premises to make alterations. Several commenters noted that many leases contain other clauses more relevant to the ADA than the alterations clause. For example, many leases contain a "compliance clause," a clause which allocates responsibility to a particular party for compliance with all relevant Federal, State, and local laws. Many commenters pointed out various types of relationships that were left unaddressed by the regulation, e.g., sale and leaseback arrangements where the landlord is a financial institution with no control or responsibility for the building; franchises; subleases; and management companies which, at least in the hotel industry, often have control over operations but are unable to make modifications to the premises.

Some commenters raised specific questions as to how the barrier removal allocation would work as a practical matter. Paragraph (b)(2) of the proposed rule provided that the burden of making readily achievable modifications within the tenant's place of public accommodation would shift to the landlord when the modifications were not readily achievable for the tenant or when the landlord denied a tenant's request for permission to make such modifications. Commenters noted that the rule did not specify exactly when the burden would actually shift from tenant to landlord and whether the landlord would have to accept a tenant's word that a particular action is not readily achievable. Others questioned if the tenant should be obligated to use alternative methods of barrier removal before the burden shifts. In light of the fact that readily achievable removal of barriers can include such actions as moving of racks and displays, some commenters doubted the appropriateness of requiring a landlord to become involved in day-to-day operations of its tenants' businesses.

The Department received widely differing comments in response to the preamble question asking whether landlord and tenant obligations should vary depending on the length of time remaining on an existing lease. Many suggested that tenants should have no responsibilities in "shorter leases," which commenters defined as ranging anywhere from 90 days to three years. Other commenters pointed out that the time remaining on the lease should not be a factor in the rule's allocation of responsibilities, but is relevant in determining what is readily achievable for the tenant. The Department agrees with this latter approach and will interpret the rule in that manner.

In recognition of the somewhat limited applicability of the allocation scheme contained in the proposed rule, paragraphs (b)(2) and (b)(3) have been deleted from the final rule. The Department has substituted instead a statement that allocation of responsibility as between the parties for taking readily achievable measures to remove barriers and to provide auxiliary aids and services both in common areas and within places of public accommodation may be determined by the lease or other contractual relationships between the parties. The ADA was not intended to change existing landlord/tenant responsibilities as set forth in the lease. By deleting specific provisions from the rule, the Department gives full recognition to this principle. As between the landlord and tenant, the extent of responsibility for particular obligations may be, and in many cases probably will be, determined by contract.

The suggested allocation of responsibilities contained in the proposed rule may be used if appropriate in a particular situation. Thus, the landlord would generally be held responsible for making readily achievable changes and providing auxiliary aids and services in common areas and for modifying policies, practices, or procedures applicable to all tenants, and the tenant would generally be responsible for readily achievable changes, provision of auxiliary aids, and modification of policies within its own place of public accommodation.

Many commenters objected to the proposed rule's allocation of responsibility for providing auxiliary aids and services solely to the tenant, pointing out that this exclusive allocation may not be appropriate in the case of larger public accommodations that operate their businesses by renting space out to smaller public accommodations. For example, large theaters often rent to smaller traveling companies and hospitals often rely on independent contractors to provide childbirth classes. Groups representing persons with disabilities objected to the proposed rule because, in their view, it permitted the large theater or hospital to evade ADA responsibilities by leasing to independent smaller entities. They suggested that these types of public accommodations are not really landlords because they are in the business of providing a service, rather than renting space, as in the case of a shopping center or office building landlord. These commenters believed that responsibility for providing auxiliary aids should shift to the landlord, if the landlord relies on a smaller public accommodation or independent contractor to provide services closely related to those of the larger public accommodation, and if the needed auxiliary aids prove to be an undue burden for the smaller public accommodation. The final rule no longer lists specific allocations to specific parties but, rather, leaves allocation of responsibilities to the lease negotiations. Parties are, therefore, free to allocate the responsibility for auxiliary aids.

Section 36.201(b)(4) of the proposed rule, which provided that alterations by a tenant on its own premises do not trigger a path of travel obligation on the landlord, has been moved to §36.403(d) of the final rule.

An entity that is not in and of itself a public accommodation, such as a trade association or performing artist, may become a public accommodation when it leases space for a conference or performance at a hotel, convention center, or stadium. For an entity to become a public accommodation when it is the lessee of space, however, the Department believes that consideration in some form must be given. Thus, a Boy Scout troop that accepts donated space does not become a public accommodation because the troop has not "leased" space, as required by the ADA.

As a public accommodation, the trade association or performing artist will be responsible for compliance with this part. Specific responsibilities should be allocated by contract, but, generally, the lessee should be responsible for providing auxiliary aids and services (which could include interpreters, Braille programs, etc.) for the participants in its conference or performance as well as for assuring that displays are accessible to individuals with disabilities.

Some commenters suggested that the rule should allocate responsibilities for areas other than removal of barriers and auxiliary aids. The final rule leaves allocation of all areas to the lease negotiations. However, in general landlords should not be given responsibility for policies a tenant applies in operating its business, if such policies are solely those of the tenant. Thus, if a restaurant tenant discriminates by refusing to seat a patron, it would be the tenant, and not the landlord, who would be responsible, because the discriminatory policy is imposed solely by the tenant and not by the landlord. If, however, a tenant refuses to modify a "no pets" rule to allow service animals in its restaurant because the landlord mandates such a rule, then both the landlord and the tenant

would be liable for violation of the ADA when a person with a service dog is refused entrance. The Department wishes to emphasize, however, that the parties are free to allocate responsibilities in any way they choose.

Private clubs are also exempt from the ADA. However, consistent with title II of the Civil Rights Act (42 U.S.C. 2000a(e), a private club is considered a public accommodation to the extent that "the facilities of such establishment are made available to the customers or patrons" of a place of public accommodation. Thus, if a private club runs a day care center that is open exclusively to its own members, the club, like the church in the example above, would have no responsibility for compliance with the ADA. Nor would the day care center have any responsibilities because it is part of the private club exempt from the ADA.

On the other hand, if the private club rents to a day care center that is open to the public, then the private club would have the same obligations as any other public accommodation that functions as a landlord with respect to compliance with title III within the day care center. In such a situation, both the private club that "leases to" a public accommodation and the public accommodation lessee (the day care center) would be subject to the ADA. This same principle would apply if the private club were to rent to, for example, a bar association, which is not generally a public accommodation but which, as explained above, becomes a public accommodation when it leases space for a conference.

Section 36.202 Activities

Section 36.202 sets out the general forms of discrimination prohibited by title III of the ADA. These general prohibitions are further refined by the specific prohibitions in subpart C. Section 36.213 makes clear that the limitations on the ADA's requirements contained in subpart C, such as "necessity" (§36.301(a)) and "safety" (§36.301(b)), are applicable to the prohibitions in §36.202. Thus, it is unnecessary to add these limitations to §36.202 as has been requested by some commenters. In addition, the language of §36.202 very closely tracks the language of section 302(b)(1)(A) of the Act, and that statutory provision does not expressly contain these limitations.

Deny participation—Section 36.202(a) provides that it is discriminatory to deny a person with a disability the right to participate in or benefit from the goods, services, facilities, privileges, advantages, or accommodations of a place of public accommodation.

A public accommodation may not exclude persons with disabilities on the basis of disability for reasons other than those specifically set forth in this part. For example, a public accommodation cannot refuse to serve a person with a disability because its insurance company conditions coverage or rates on the absence of persons with disabilities. This is a frequent basis of exclusion from a variety of community activities and is prohibited by this part.

Unequal benefit—Section 36.202(b) prohibits services or accommodations that are not equal to those provided others. For example, persons with disabilities must not be limited to certain performances at a theater.

Separate benefit—Section 36.202(c) permits different or separate benefits or services only when necessary to provide persons with disabilities opportunities as effective as those provided others. This paragraph permitting separate benefits "when necessary" should be read together with §36.203(a), which requires integration in "the most integrated setting appropriate to the needs of the individual." The preamble to that section provides further guidance on separate programs. Thus, this section would not prohibit the designation of parking spaces for persons with disabilities.

Each of the three paragraphs (a)–(c) prohibits discrimination against an individual or class of individuals "either directly or through contractual, licensing, or other arrangements." The intent of the contractual prohibitions of these paragraphs is to prohibit a public accommodation from doing indirectly, through a contractual relationship, what it may not do directly. Thus, the "individual or class of individuals" referenced in the three paragraphs is intended to refer to the clients and customers of the public accommodation that entered into a contractual arrangement. It is not intended to encompass the clients or customers of other entities. A public accommodation, therefore, is not liable under this provision for discrimination that may be practiced by those with whom it has a contractual relationship, when that discrimination is not directed against its own clients or customers. For example, if an amusement park contracts with a food service company to operate its restaurants at the park, the amusement park is not responsible for other operations of the food service company that do not involve clients or customers of the amusement park. Section 36.202(d) makes this clear by providing that the term "individual or class of individuals" refers to the clients or customers of the public accommodation that enters into the contractual, licensing, or other arrangement.

Section 36.203 Integrated Settings

Section 36.203 addresses the integration of persons with disabilities. The ADA recognizes that the provision of goods and services in an integrated manner is a fundamental tenet of nondiscrimination on the basis of

disability. Providing segregated accommodations and services relegates persons with disabilities to the status of second-class citizens. For example, it would be a violation of this provision to require persons with mental disabilities to eat in the back room of a restaurant or to refuse to allow a person with a disability the full use of a health spa because of stereotypes about the person's ability to participate. Section 36.203(a) states that a public accommodation shall afford goods, services, facilities, privileges, advantages, and accommodations to an individual with a disability in the most integrated setting appropriate to the needs of the individual. Section 36.203(b) specifies that, notwithstanding the existence of separate or different programs or activities provided in accordance with this section, an individual with a disability shall not be denied the opportunity to participate in such programs or activities that are not separate or different. Section 306.203(c), which is derived from section 501(d) of the Americans with Disabilities Act, states that nothing in this part shall be construed to require an individual with a disability to accept an accommodation, aid, service, opportunity, or benefit that he or she chooses not to accept.

Taken together, these provisions are intended to prohibit exclusion and segregation of individuals with disabilities and the denial of equal opportunities enjoyed by others, based on, among other things, presumptions, patronizing attitudes, fears, and stereotypes about individuals with disabilities. Consistent with these standards, public accommodations are required to make decisions based on facts applicable to individuals and not on the basis of presumptions as to what a class of individuals with disabilities can or cannot do.

Sections 36.203 (b) and (c) make clear that individuals with disabilities cannot be denied the opportunity to participate in programs that are not separate or different. This is an important and overarching principle of the Americans with Disabilities Act. Separate, special, or different programs that are designed to provide a benefit to persons with disabilities cannot be used to restrict the participation of persons with disabilities in general, integrated activities.

For example, a person who is blind may wish to decline participating in a special museum tour that allows persons to touch sculptures in an exhibit and instead tour the exhibit at his or her own pace with the museum's recorded tour. It is not the intent of this section to require the person who is blind to avail himself or herself of the special tour. Modified participation for persons with disabilities must be a choice, not a requirement.

Further, it would not be a violation of this section for an establishment to offer recreational programs specially designed for children with mobility impairments in those limited circumstances. However, it would be a violation of this section if the entity then excluded these children from other recreational services made available to nondisabled children, or required children with disabilities to attend only designated programs.

Many commenters asked that the Department clarify a public accommodation's obligations within the integrated program when it offers a separate program, but an individual with a disability chooses not to participate in the separate program. It is impossible to make a blanket statement as to what level of auxiliary aids or modifications are required in the integrated program. Rather, each situation must be assessed individually. Assuming the integrated program would be appropriate for a particular individual, the extent to which that individual must be provided with modifications will depend not only on what the individual needs but also on the limitations set forth in subpart C. For example, it may constitute an undue burden for a particular public accommodation, which provides a full-time interpreter in its special guided tour for individuals with hearing impairments, to hire an additional interpreter for those individuals who choose to attend the integrated program. The Department cannot identify categorically the level of assistance or aid required in the integrated program.

The preamble to the proposed rule contained a statement that some interpreted as encouraging the continuation of separate schools, sheltered workshops, special recreational programs, and other similar programs. It is important to emphasize that §36.202(c) only calls for separate programs when such programs are "necessary" to provide as effective an opportunity to individuals with disabilities as to other individuals. Likewise, §36.203(a) only permits separate programs when a more integrated setting would not be "appropriate." Separate programs are permitted, then, in only limited circumstances. The sentence at issue has been deleted from the preamble because it was too broadly stated and had been erroneously interpreted as Departmental encouragement of separate programs without qualification.

The proposed rule's reference in §36.203(b) to separate programs or activities provided in accordance with "this section" has been changed to "this subpart" in recognition of the fact that separate programs or activities may, in some limited circumstances, be permitted not only by §36.203(a) but also by §36.202(c).

In addition, some commenters suggested that the individual with the disability is the only one who can decide whether a setting is

"appropriate" and what the "needs" are. Others suggested that only the public accommodation can make these determinations. The regulation does not give exclusive responsibility to either party. Rather, the determinations are to be made based on an objective view, presumably one which would take into account views of both parties.

Some commenters expressed concern that §36.203(c), which states that nothing in the rule requires an individual with a disability to accept special accommodations and services provided under the ADA, could be interpreted to allow guardians of infants or older people with disabilities to refuse medical treatment for their wards. Section 36.203(c) has been revised to make it clear that paragraph (c) is inapplicable to the concern of the commenters. A new paragraph (c)(2) has been added stating that nothing in the regulation authorizes the representative or guardian of an individual with a disability to decline food, water, medical treatment, or medical services for that individual. New paragraph (c) clarifies that neither the ADA nor the regulation alters current Federal law ensuring the rights of incompetent individuals with disabilities to receive food, water, and medical treatment. See, *e.g.*, Child Abuse Amendments of 1984 (42 U.S.C. 5106a(b)(10), 5106g(10)); Rehabilitation Act of 1973, as amended (29 U.S.C 794); Developmentally Disabled Assistance and Bill of Rights Act (42 U.S.C. 6042).

Sections 36.203(c) (1) and (2) are based on section 501(d) of the ADA. Section §501(d) was designed to clarify that nothing in the ADA requires individuals with disabilities to accept special accommodations and services for individuals with disabilities that may segregate them:

The Committee added this section (501(d)) to clarify that nothing in the ADA is intended to permit discriminatory treatment on the basis of disability, even when such treatment is rendered under the guise of providing an accommodation, service, aid or benefit to the individual with disability. For example, a blind individual may choose not to avail himself or herself of the right to go to the front of a line, even if a particular public accommodation has chosen to offer such a modification of a policy for blind individuals. Or, a blind individual may choose to decline to participate in a special museum tour that allows persons to touch sculptures in an exhibit and instead tour the exhibits at his or her own pace with the museum's recorded tour.

(Judiciary report at 71–72.) The Act is not to be construed to mean that an individual with disabilities must accept special accommodations and services for individuals with disabilities when that individual chooses to participate in the regular services already offered. Because medical treatment, including treatment for particular conditions, is not a special accommodation or service for individuals with disabilities under section 501(d), neither the Act nor this part provides affirmative authority to suspend such treatment. Section 501(d) is intended to clarify that the Act is not designed to foster discrimination through mandatory acceptance of special services when other alternatives are provided; this concern does not reach to the provision of medical treatment for the disabling condition itself.

Section 36.213 makes clear that the limitations contained in subpart C are to be read into subpart B. Thus, the integration requirement is subject to the various defenses contained in subpart C, such as safety, if eligibility criteria are at issue (§36.301(b)), or fundamental alteration and undue burden, if the concern is provision of auxiliary aids (§36.303(a)).

Section 36.204 Administrative Methods

Section 36.204 specifies that an individual or entity shall not, directly, or through contractual or other arrangements, utilize standards or criteria or methods of administration that have the effect of discriminating on the basis of disability or that perpetuate the discrimination of others who are subject to common administrative control. The preamble discussion of §36.301 addresses eligibility criteria in detail.

Section 36.204 is derived from section 302(b)(1)(D) of the Americans with Disabilities Act, and it uses the same language used in the employment section of the ADA (section 102(b)(3)). Both sections incorporate a disparate impact standard to ensure the effectiveness of the legislative mandate to end discrimination. This standard is consistent with the interpretation of section 504 by the U.S. Supreme Court in *Alexander* v. *Choate*, 469 U.S. 287 (1985). The Court in *Choate* explained that members of Congress made numerous statements during passage of section 504 regarding eliminating architectural barriers, providing access to transportation, and eliminating discriminatory effects of job qualification procedures. The Court then noted: "These statements would ring hollow if the resulting legislation could not rectify the harms resulting from action that discriminated by effect as well as by design." *Id* at 297 (footnote omitted).

Of course, §36.204 is subject to the various limitations contained in subpart C including, for example, necessity (§36.301(a)), safety (§36.301(b)), fundamental alteration (§36.302(a)), readily achievable (§36.304(a)), and undue burden (§36.303(a)).

Section 36.205 Association

Section 36.205 implements section 302(b)(1)(E) of the Act, which provides that a public accommodation shall not exclude or

otherwise deny equal goods, services, facilities, privileges, advantages, accommodations, or other opportunities to an individual or entity because of the known disability of an individual with whom the individual or entity is known to have a relationship or association. This section is unchanged from the proposed rule.

The individuals covered under this section include any individuals who are discriminated against because of their known association with an individual with a disability. For example, it would be a violation of this part for a day care center to refuse admission to a child because his or her brother has HIV disease.

This protection is not limited to those who have a familial relationship with the individual who has a disability. If a place of public accommodation refuses admission to a person with cerebral palsy and his or her companions, the companions have an independent right of action under the ADA and this section.

During the legislative process, the term "entity" was added to section 302(b)(1)(E) to clarify that the scope of the provision is intended to encompass not only persons who have a known association with a person with a disability, but also entities that provide services to or are otherwise associated with such individuals. This provision was intended to ensure that entities such as health care providers, employees of social service agencies, and others who provide professional services to persons with disabilities are not subjected to discrimination because of their professional association with persons with disabilities. For example, it would be a violation of this section to terminate the lease of a entity operating an independent living center for persons with disabilities, or to seek to evict a health care provider because that individual or entity provides services to persons with mental impairments.

Section 36.206 Retaliation or Coercion

Section 36.206 implements section 503 of the ADA, which prohibits retaliation against any individual who exercises his or her rights under the Act. This section is unchanged from the proposed rule. Paragraph (a) of §36.206 provides that no private entity or public entity shall discriminate against any individual because that individual has exercised his or her right to oppose any act or practice made unlawful by this part, or because that individual made a charge, testified, assisted, or participated in any manner in an investigation, proceeding, or hearing under the Act or this part.

Paragraph (b) provides that no private entity or public entity shall coerce, intimidate, threaten, or interfere with any individual in the exercise of his or her rights under this part or because that individual aided or encouraged any other individual in the exercise or enjoyment of any right granted or protected by the Act or this part.

Illustrations of practices prohibited by this section are contained in paragraph (c), which is modeled on a similar provision in the regulations issued by the Department of Housing and Urban Development to implement the Fair Housing Act (see 24 CFR 100.400(c)(l)). Prohibited actions may include:

(1) Coercing an individual to deny or limit the benefits, services, or advantages to which he or she is entitled under the Act or this part;

(2) Threatening, intimidating, or interfering with an individual who is seeking to obtain or use the goods, services, facilities, privileges, advantages, or accommodations of a public accommodation;

(3) Intimidating or threatening any person because that person is assisting or encouraging an individual or group entitled to claim the rights granted or protected by the Act or this part to exercise those rights; or

(4) Retaliating against any person because that person has participated in any investigation or action to enforce the Act or this part.

This section protects not only individuals who allege a violation of the Act or this part, but also any individuals who support or assist them. This section applies to all investigations or proceedings initiated under the Act or this part without regard to the ultimate resolution of the underlying allegations. Because this section prohibits any act of retaliation or coercion in response to an individual's effort to exercise rights established by the Act and this part (or to support the efforts of another individual), the section applies not only to public accommodations that are otherwise subject to this part, but also to individuals other than public accommodations or to public entities. For example, it would be a violation of the Act and this part for a private individual, e.g., a restaurant customer, to harass or intimidate an individual with a disability in an effort to prevent that individual from patronizing the restaurant. It would, likewise, be a violation of the Act and this part for a public entity to take adverse action against an employee who appeared as a witness on behalf of an individual who sought to enforce the Act.

Section 36.207 Places of Public Accommodation Located in Private Residences

A private home used exclusively as a residence is not covered by title III because it is neither a "commercial facility" nor a "place of public accommodation." In some situations, however, a private home is not used exclusively as a residence, but houses a place of public accommodation in all or part of a home (e.g., an accountant who meets with his or her clients at his or her residence). Section 36.207(a) provides that those portions of the private residence used in the operation

of the place of public accommodation are covered by this part.

For instance, a home or a portion of a home may be used as a day care center during the day and a residence at night. If all parts of the house are used for the day care center, then the entire residence is a place of public accommodation because no part of the house is used exclusively as a residence. If an accountant uses one room in the house solely as his or her professional office, then a portion of the house is used exclusively as a place of public accommodation and a portion is used exclusively as a residence. Section 36.207 provides that when a portion of a residence is used exclusively as a residence, that portion is not covered by this part. Thus, the portions of the accountant's house, other than the professional office and areas and spaces leading to it, are not covered by this part. All of the requirements of this rule apply to the covered portions, including requirements to make reasonable modifications in policies, eliminate discriminatory eligibility criteria, take readily achievable measures to remove barriers or provide readily achievable alternatives (e.g., making house calls), provide auxiliary aids and services and undertake only accessible new construction and alterations.

Paragraph (b) was added in response to comments that sought clarification on the extent of coverage of the private residence used as the place of public accommodation. The final rule makes clear that the place of accommodation extends to all areas of the home used by clients and customers of the place of public accommodation. Thus, the ADA would apply to any door or entry way, hallways, a restroom, if used by customers and clients; and any other portion of the residence, interior or exterior, used by customers or clients of the public accommodation. This interpretation is simply an application of the general rule for all public accommodations, which extends statutory requirements to all portions of the facility used by customers and clients, including, if applicable, restrooms, hallways, and approaches to the public accommodation. As with other public accommodations, barriers at the entrance and on the sidewalk leading up to the public accommodation, if the sidewalk is under the control of the public accommodation, must be removed if doing so is readily achievable.

The Department recognizes that many businesses that operate out of personal residences are quite small, often employing only the homeowner and having limited total revenues. In these circumstances the effect of ADA coverage would likely be quite minimal. For example, because the obligation to remove existing architectural barriers is limited to those that are easily accomplishable without much difficulty or expense (*see* §36.304), the range of required actions would be quite modest. It might not be readily achievable for such a place of public accommodation to remove any existing barriers. If it is not readily achievable to remove existing architectural barriers, a public accommodation located in a private residence may meet its obligations under the Act and this part by providing its goods or services to clients or customers with disabilities through the use of alternative measures, including delivery of goods or services in the home of the customer or client, to the extent that such alternative measures are readily achievable (*See* §36.305).

Some commenters asked for clarification as to how the new construction and alteration standards of subpart D will apply to residences. The new construction standards only apply to the extent that the residence or portion of the residence was designed or intended for use as a public accommodation. Thus, for example, if a portion of a home is designed or constructed for use exclusively as a lawyer's office or for use both as a lawyer's office and for residential purposes, then it must be designed in accordance with the new construction standards in the appendix. Likewise, if a homeowner is undertaking alterations to convert all or part of his residence to a place of public accommodation, that work must be done in compliance with the alterations standards in the appendix.

The preamble to the proposed rule addressed the applicable requirements when a commercial facility is located in a private residence. That situation is now addressed in §36.401(b) of subpart D.

Section 36.208 Direct Threat

Section 36.208(a) implements section 302(b)(3) of the Act by providing that this part does not require a public accommodation to permit an individual to participate in or benefit from the goods, services, facilities, privileges, advantages and accommodations of the public accommodation, if that individual poses a direct threat to the health or safety of others. This section is unchanged from the proposed rule.

The Department received a significant number of comments on this section. Commenters representing individuals with disabilities generally supported this provision, but suggested revisions to further limit its application. Commenters representing public accommodations generally endorsed modifications that would permit a public accommodation to exercise its own judgment in determining whether an individual poses a direct threat.

The inclusion of this provision is not intended to imply that persons with disabilities pose risks to others. It is intended to address concerns that may arise in this area. It establishes a strict standard that must be met before denying service to an individual

with a disability or excluding that individual from participation.

Paragraph (b) of this section explains that a "direct threat" is a significant risk to the health or safety of others that cannot be eliminated by a modification of policies, practices, or procedures, or by the provision of auxiliary aids and services. This paragraph codifies the standard first applied by the Supreme Court in *School Board of Nassau County* v. *Arline*, 480 U.S. 273 (1987), in which the Court held that an individual with a contagious disease may be an "individual with handicaps" under section 504 of the Rehabilitation Act. In *Arline*, the Supreme Court recognized that there is a need to balance the interests of people with disabilities against legitimate concerns for public safety. Although persons with disabilities are generally entitled to the protection of this part, a person who poses a significant risk to others may be excluded if reasonable modifications to the public accommodation's policies, practices, or procedures will not eliminate that risk. The determination that a person poses a direct threat to the health or safety of others may not be based on generalizations or stereotypes about the effects of a particular disability; it must be based on an individual assessment that conforms to the requirements of paragraph (c) of this section.

Paragraph (c) establishes the test to use in determining whether an individual poses a direct threat to the health or safety of others. A public accommodation is required to make an individualized assessment, based on reasonable judgment that relies on current medical evidence or on the best available objective evidence, to determine: The nature, duration, and severity of the risk; the probability that the potential injury will actually occur; and whether reasonable modifications of policies, practices, or procedures will mitigate the risk. This is the test established by the Supreme Court in *Arline.* Such an inquiry is essential if the law is to achieve its goal of protecting disabled individuals from discrimination based on prejudice, stereotypes, or unfounded fear, while giving appropriate weight to legitimate concerns, such as the need to avoid exposing others to significant health and safety risks. Making this assessment will not usually require the services of a physician. Sources for medical knowledge include guidance from public health authorities, such as the U.S. Public Health Service, the Centers for Disease Control, and the National Institutes of Health, including the National Institute of Mental Health.

Many of the commenters sought clarification of the inquiry requirement. Some suggested that public accommodations should be prohibited from making any inquiries to determine if an individual with a disability would pose a direct threat to other persons. The Department believes that to preclude all such inquiries would be inappropriate. Under §36.301 of this part, a public accommodation is permitted to establish eligibility criteria necessary for the safe operation of the place of public accommodation. Implicit in that right is the right to ask if an individual meets the criteria. However, any eligibility or safety standard established by a public accommodation must be based on actual risk, not on speculation or stereotypes; it must be applied to all clients or customers of the place of public accommodation; and inquiries must be limited to matters necessary to the application of the standard.

Some commenters suggested that the test established in the *Arline* decision, which was developed in the context of an employment case, is too stringent to apply in a public accommodations context where interaction between the public accommodation and its client or customer is often very brief. One suggested alternative was to permit public accommodations to exercise "good faith" judgment in determining whether an individual poses a direct threat, particularly when a public accommodation is dealing with a client or customer engaged in disorderly or disruptive behavior.

The Department believes that the ADA clearly requires that any determination to exclude an individual from participation must be based on an objective standard. A public accommodation may establish neutral eligibility criteria as a condition of receiving its goods or services. As long as these criteria are necessary for the safe provision of the public accommodation's goods and services and applied neutrally to all clients or customers, regardless of whether they are individuals with disabilities, a person who is unable to meet the criteria may be excluded from participation without inquiry into the underlying reason for the inability to comply. In places of public accommodation such as restaurants, theaters, or hotels, where the contact between the public accommodation and its clients is transitory, the uniform application of an eligibility standard precluding violent or disruptive behavior by any client or customer should be sufficient to enable a public accommodation to conduct its business in an orderly manner.

Some other commenters asked for clarification of the application of this provision to persons, particularly children, who have short-term, contagious illnesses, such as fevers, influenza, or the common cold. It is common practice in schools and day care settings to exclude persons with such illnesses until the symptoms subside. The Department believes that these commenters misunderstand the scope of this rule. The ADA only prohibits discrimination against an individual with a disability. Under the ADA and

this part, a "disability" is defined as a physical or mental impairment that substantially limits one or more major life activities. Common, short-term illnesses that predictably resolve themselves within a matter of days do not "substantially limit" a major life activity; therefore, it is not a violation of this part to exclude an individual from receiving the services of a public accommodation because of such transitory illness. However, this part does apply to persons who have long-term illnesses. Any determination with respect to a person who has a chronic or long-term illness must be made in compliance with the requirements of this section.

Section 36.209 Illegal Use of Drugs

Section 36.209 effectuates section 510 of the ADA, which clarifies the Act's application to people who use drugs illegally. Paragraph (a) provides that this part does not prohibit discrimination based on an individual's current illegal use of drugs.

The Act and the regulation distinguish between illegal use of drugs and the legal use of substances, whether or not those substances are "controlled substances," as defined in the Controlled Substances Act (21 U.S.C. 812). Some controlled substances are prescription drugs that have legitimate medical uses. Section 36.209 does not affect use of controlled substances pursuant to a valid prescription, under supervision by a licensed health care professional, or other use that is authorized by the Controlled Substances Act or any other provision of Federal law. It does apply to illegal use of those substances, as well as to illegal use of controlled substances that are not prescription drugs. The key question is whether the individual's use of the substance is illegal, not whether the substance has recognized legal uses. Alcohol is not a controlled substance, so use of alcohol is not addressed by §36.209. Alcoholics are individuals with disabilities, subject to the protections of the statute.

A distinction is also made between the use of a substance and the status of being addicted to that substance. Addiction is a disability, and addicts are individuals with disabilities protected by the Act. The protection, however, does not extend to actions based on the illegal use of the substance. In other words, an addict cannot use the fact of his or her addiction as a defense to an action based on illegal use of drugs. This distinction is not artificial. Congress intended to deny protection to people who engage in the illegal use of drugs, whether or not they are addicted, but to provide protection to addicts so long as they are not currently using drugs.

A third distinction is the difficult one between current use and former use. The definition of "current illegal use of drugs" in §36.104, which is based on the report of the Conference Committee, H.R. Conf. Rep. No. 596, 101st Cong., 2d Sess. 64 (1990), is "illegal use of drugs that occurred recently enough to justify a reasonable belief that a person's drug use is current or that continuing use is a real and ongoing problem."

Paragraph (a)(2)(i) specifies that an individual who has successfully completed a supervised drug rehabilitation program or has otherwise been rehabilitated successfully and who is not engaging in current illegal use of drugs is protected. Paragraph (a)(2)(ii) clarifies that an individual who is currently participating in a supervised rehabilitation program and is not engaging in current illegal use of drugs is protected. Paragraph (a)(2)(iii) provides that a person who is erroneously regarded as engaging in current illegal use of drugs, but who is not engaging in such use, is protected.

Paragraph (b) provides a limited exception to the exclusion of current illegal users of drugs from the protections of the Act. It prohibits denial of health services, or services provided in connection with drug rehabilitation, to an individual on the basis of current illegal use of drugs, if the individual is otherwise entitled to such services. As explained further in the discussion of §36.302, a health care facility that specializes in a particular type of treatment, such as care of burn victims, is not required to provide drug rehabilitation services, but it cannot refuse to treat an individual's burns on the grounds that the individual is illegally using drugs.

A commenter argued that health care providers should be permitted to use their medical judgment to postpone discretionary medical treatment of individuals under the influence of alcohol or drugs. The regulation permits a medical practitioner to take into account an individual's use of drugs in determining appropriate medical treatment. Section 36.209 provides that the prohibitions on discrimination in this part do not apply when the public accommodation acts on the basis of current illegal use of drugs. Although those prohibitions do apply under paragraph (b), the limitations established under this part also apply. Thus, under §36.208, a health care provider or other public accommodation covered under §36.209(b) may exclude an individual whose current illegal use of drugs poses a direct threat to the health or safety of others, and, under §36.301, a public accommodation may impose or apply eligibility criteria that are necessary for the provision of the services being offered, and may impose legitimate safety requirements that are necessary for safe operation. These same limitations also apply to individuals with disabilities who use alcohol or prescription drugs. The Department believes that these provisions address this commenter's concerns.

Other commenters pointed out that abstention from the use of drugs is an essential

condition for participation in some drug rehabilitation programs, and may be a necessary requirement in inpatient or residential settings. The Department believes that this comment is well-founded. Congress clearly did not intend to exclude from drug treatment programs the very individuals who need such programs because of their use of drugs. In such a situation, however, once an individual has been admitted to a program, abstention may be a necessary and appropriate condition to continued participation. The final rule therefore provides that a drug rehabilitation or treatment program may deny participation to individuals who use drugs while they are in the program.

Paragraph (c) expresses Congress' intention that the Act be neutral with respect to testing for illegal use of drugs. This paragraph implements the provision in section 510(b) of the Act that allows entities "to adopt or administer reasonable policies or procedures, including but not limited to drug testing," that ensure an individual who is participating in a supervised rehabilitation program, or who has completed such a program or otherwise been rehabilitated successfully, is no longer engaging in the illegal use of drugs. Paragraph (c) is not to be construed to encourage, prohibit, restrict, or authorize the conducting of testing for the illegal use of drugs.

Paragraph (c) of §36.209 clarifies that it is not a violation of this part to adopt or administer reasonable policies or procedures to ensure that an individual who formerly engaged in the illegal use of drugs is not currently engaging in illegal use of drugs. Any such policies or procedures must, of course, be reasonable, and must be designed to identify accurately the illegal use of drugs. This paragraph does not authorize inquiries, tests, or other procedures that would disclose use of substances that are not controlled substances or are taken under supervision by a licensed health care professional, or other uses authorized by the Controlled Substances Act or other provisions of Federal law, because such uses are not included in the definition of "illegal use of drugs."

One commenter argued that the rule should permit testing for lawful use of prescription drugs, but most favored the explanation that tests must be limited to *unlawful* use in order to avoid revealing the use of prescription medicine used to treat disabilities. Tests revealing legal use of prescription drugs might violate the prohibition in §36.301 of attempts to unnecessarily identify the existence of a disability.

Section 36.210 Smoking

Section 36.210 restates the clarification in section 501(b) of the Act that the Act does not preclude the prohibition of, or imposition of restrictions on, smoking. Some commenters argued that §36.210 does not go far enough, and that the regulation should prohibit smoking in all places of public accommodation. The reference to smoking in section 501 merely clarifies that the Act does not require public accommodations to accommodate smokers by permitting them to smoke in places of public accommodations.

Section 36.211 Maintenance of Accessible Features

Section 36.211 provides that a public accommodation shall maintain in operable working condition those features of facilities and equipment that are required to be readily accessible to and usable by persons with disabilities by the Act or this part. The Act requires that, to the maximum extent feasible, facilities must be accessible to, *and usable by*, individuals with disabilities. This section recognizes that it is not sufficient to provide features such as accessible routes, elevators, or ramps, if those features are not maintained in a manner that enables individuals with disabilities to use them. Inoperable elevators, locked accessible doors, or "accessible" routes that are obstructed by furniture, filing cabinets, or potted plants are neither "accessible to" nor "usable by" individuals with disabilities.

Some commenters objected that this section appeared to establish an absolute requirement and suggested that language from the preamble be included in the text of the regulation. It is, of course, impossible to guarantee that mechanical devices will never fail to operate. Paragraph (b) of the final regulation provides that this section does not prohibit isolated or temporary interruptions in service or access due to maintenance or repairs. This paragraph is intended to clarify that temporary obstructions or isolated instances of mechanical failure would not be considered violations of the Act or this part. However, allowing obstructions or "out of service" equipment to persist beyond a reasonable period of time would violate this part, as would repeated mechanical failures due to improper or inadequate maintenance. Failure of the public accommodation to ensure that accessible routes are properly maintained and free of obstructions, or failure to arrange prompt repair of inoperable elevators or other equipment intended to provide access, would also violate this part.

Other commenters requested that this section be expanded to include specific requirements for inspection and maintenance of equipment, for training staff in the proper operation of equipment, and for maintenance of specific items. The Department believes that this section properly establishes the general requirement for maintaining access and that further, more detailed requirements are not necessary.

Section 36.212 Insurance

The Department received numerous comments on proposed §36.212. Most supported the proposed regulation but felt that it did not go far enough in protecting individuals with disabilities and persons associated with them from discrimination. Many commenters argued that language from the preamble to the proposed regulation should be included in the text of the final regulation. Other commenters argued that even that language was not strong enough, and that more stringent standards should be established. Only a few commenters argued that the Act does not apply to insurance underwriting practices or the terms of insurance contracts. These commenters cited language from the Senate committee report (S. Rep. No. 116, 101st Cong., 1st Sess., at 84–86 (1989) (hereinafter "Senate report")), indicating that Congress did not intend to affect existing insurance practices.

The Department has decided to adopt the language of the proposed rule without change. Sections 36.212 (a) and (b) restate section 501(c) of the Act, which provides that the Act shall not be construed to restrict certain insurance practices on the part of insurance companies and employers, as long as such practices are not used to evade the purposes of the Act. Section 36.212(c) is a specific application of §36.202(a), which prohibits denial of participation on the basis of disability. It provides that a public accommodation may not refuse to serve an individual with a disability because of limitations on coverage or rates in its insurance policies (see Judiciary report at 56).

Many commenters supported the requirements of §36.212(c) in the proposed rule because it addressed an important reason for denial of services by public accommodations. One commenter argued that services could be denied if the insurance coverage required exclusion of people whose disabilities were reasonably related to the risks involved in that particular place of public accommodation. Sections 36.208 and 36.301 establish criteria for denial of participation on the basis of legitimate safety concerns. This paragraph does not prohibit consideration of such concerns in insurance policies, but provides that any exclusion on the basis of disability must be based on the permissible criteria, rather than on the terms of the insurance contract.

Language in the committee reports indicates that Congress intended to reach insurance practices by prohibiting differential treatment of individuals with disabilities in insurance offered by public accommodations unless the differences are justified. "Under the ADA, a person with a disability cannot be denied insurance or be subject to different terms or conditions of insurance based on disability alone, if the disability does not pose increased risks" (Senate report at 84; Education and Labor report at 136). Section 501(c) (1) of the Act was intended to emphasize that "insurers may continue to sell to and underwrite individuals applying for life, health, or other insurance on an individually underwritten basis, or to service such insurance products, *so long as the standards used are based on sound actuarial data and not on speculation*" (Judiciary report at 70 (emphasis added); see also Senate report at 85; Education and Labor report at 137).

The committee reports indicate that underwriting and classification of risks must be "based on sound actuarial principles or be related to actual or reasonably anticipated experience" (see, *e.g.*, Judiciary report at 71). Moreover, "while a plan which limits certain kinds of coverage based on classification of risk would be allowed * * *, the plan may not refuse to insure, or refuse to continue to insure, or limit the amount, extent, or kind of coverage available to an individual, or charge a different rate for the same coverage solely because of a physical or mental impairment, except where the refusal, limitation, or rate differential is based on sound actuarial principles or is related to actual or reasonably anticipated experience" (Senate report at 85; Education and Labor report at 136–37; Judiciary report at 71). The ADA, therefore, does not prohibit use of legitimate actuarial considerations to justify differential treatment of individuals with disabilities in insurance.

The committee reports provide some guidance on how nondiscrimination principles in the disability rights area relate to insurance practices. For example, a person who is blind may not be denied coverage based on blindness independent of actuarial risk classification. With respect to group health insurance coverage, an individual with a pre-existing condition may be denied coverage for that condition for the period specified in the policy, but cannot be denied coverage for illness or injuries unrelated to the pre-existing condition. Also, a public accommodation may offer insurance policies that limit coverage for certain procedures or treatments, but may not entirely deny coverage to a person with a disability.

The Department requested comment on the extent to which data that would establish statistically sound correlations are available. Numerous commenters cited pervasive problems in the availability and cost of insurance for individuals with disabilities and parents of children with disabilities. No commenters cited specific data, or sources of data, to support specific exclusionary practices. Several commenters reported that, even when statistics are available, they are often outdated and do not reflect current medical technology and treatment methods. Concern was expressed that adequate efforts are not made to distinguish those individuals

who are high users of health care from individuals in the same diagnostic groups who may be low users of health care. One insurer reported that "hard data and actuarial statistics are not available to provide precise numerical justifications for every underwriting determination," but argued that decisions may be based on "logical principles generally accepted by actuarial science and fully consistent with state insurance laws." The commenter urged that the Department recognize the validity of information other than statistical data as a basis for insurance determinations.

The most frequent comment was a recommendation that the final regulation should require the insurance company to provide a copy of the actuarial data on which its actions are based when requested by the applicant. Such a requirement would be beyond anything contemplated by the Act or by Congress and has therefore not been included in the Department's final rule. Because the legislative history of the ADA clarifies that different treatment of individuals with disabilities in insurance may be justified by sound actuarial data, such actuarial data will be critical to any potential litigation on this issue. This information would presumably be obtainable in a court proceeding where the insurer's actuarial data was the basis for different treatment of persons with disabilities. In addition, under some State regulatory schemes, insurers may have to file such actuarial information with the State regulatory agency and this information may be obtainable at the State level.

A few commenters representing the insurance industry conceded that underwriting practices in life and health insurance are clearly covered, but argued that property and casualty insurance are not covered. The Department sees no reason for this distinction. Although life and health insurance are the areas where the regulation will have its greatest application, the Act applies equally to unjustified discrimination in all types of insurance provided by public accommodations. A number of commenters, for example, reported difficulties in obtaining automobile insurance because of their disabilities, despite their having good driving records.

Section 36.213 Relationship of Subpart 8 to Subparts C and D

This section explains that subpart B sets forth the general principles of nondiscrimination applicable to all entities subject to this regulation, while subparts C and D provide guidance on the application of this part to specific situations. The specific provisions in subparts C and D, including the limitations on those provisions, control over the general provisions in circumstances where both specific and general provisions apply. Resort to the general provisions of subpart B is only appropriate where there are no applicable specific rules of guidance in subparts C or D. This interaction between the specific requirements and the general requirements operates with regard to contractual obligations as well.

One illustration of this principle is its application to the obligation of a public accommodation to provide access to services by removal of architectural barriers or by alternatives to barrier removal. The general requirement, established in subpart B by §36.203, is that a public accommodation must provide its services to individuals with disabilities in the most integrated setting appropriate. This general requirement would appear to categorically prohibit "segregated" seating for persons in wheelchairs. Section 36.304, however, only requires removal of architectural barriers to the extent that removal is "readily achievable." If providing access to all areas of a restaurant, for example, would not be "readily achievable," a public accommodation may provide access to selected areas only. Also, §36.305 provides that, where barrier removal is not readily achievable, a public accommodation may use alternative, readily achievable methods of making services available, such as curbside service or home delivery. Thus, in this manner, the specific requirements of §§36.304 and 36.305 control over the general requirement of §36.203.

Subpart C—Specific Requirements

In general, subpart C implements the "specific prohibitions" that comprise section 302(b)(2) of the ADA. It also addresses the requirements of section 309 of the ADA regarding examinations and courses.

Section 36.301 Eligibility Criteria

Section 36.301 of the rule prohibits the imposition or application of eligibility criteria that screen out or tend to screen out an individual with a disability or any class of individuals with disabilities from fully and equally enjoying any goods, services, facilities, privileges, advantages, and accommodations, unless such criteria can be shown to be necessary for the provision of the goods, services, facilities, privileges, advantages, or accommodations being offered. This prohibition is based on section 302(b)(2)(A)(i) of the ADA.

It would violate this section to establish exclusive or segregative eligibility criteria that would bar, for example, all persons who are deaf from playing on a golf course or all individuals with cerebral palsy from attending a movie theater, or limit the seating of individuals with Down's syndrome to only particular areas of a restaurant. The wishes, tastes, or preferences of other customers may not be asserted to justify criteria that

would exclude or segregate individuals with disabilities.

Section 36.301 also prohibits attempts by a public accommodation to unnecessarily identify the existence of a disability; for example, it would be a violation of this section for a retail store to require an individual to state on a credit application whether the applicant has epilepsy, mental illness, or any other disability, or to inquire unnecessarily whether an individual has HIV disease.

Section 36.301 also prohibits policies that unnecessarily impose requirements or burdens on individuals with disabilities that are not placed on others. For example, public accommodations may not require that an individual with a disability be accompanied by an attendant. As provided by §36.306, however, a public accommodation is not required to provide services of a personal nature including assistance in toileting, eating, or dressing.

Paragraph (c) of §36.301 provides that public accommodations may not place a surcharge on a particular individual with a disability or any group of individuals with disabilities to cover the costs of measures, such as the provision of auxiliary aids and services, barrier removal, alternatives to barrier removal, and reasonable modifications in policies, practices, and procedures, that are required to provide that individual or group with the nondiscriminatory treatment required by the Act or this part.

A number of commenters inquired as to whether deposits required for the use of auxiliary aids, such as assistive listening devices, are prohibited surcharges. It is the Department's view that reasonable, completely refundable, deposits are not to be considered surcharges prohibited by this section. Requiring deposits is an important means of ensuring the availability of equipment necessary to ensure compliance with the ADA.

Other commenters sought clarification as to whether §36.301(c) prohibits professionals from charging for the additional time that it may take in certain cases to provide services to an individual with disabilities. The Department does not intend §36.301(c) to prohibit professionals who bill on the basis of time from charging individuals with disabilities on that basis. However, fees may not be charged for the provision of auxiliary aids and services, barrier removal, alternatives to barrier removal, reasonable modifications in policies, practices, and procedures, or any other measures necessary to ensure compliance with the ADA.

Other commenters inquired as to whether day care centers may charge for extra services provided to individuals with disabilities. As stated above, §36.302(c) is intended only to prohibit charges for measures necessary to achieve compliance with the ADA.

Another commenter asserted that charges may be assessed for home delivery provided as an alternative to barrier removal under §36.305, when home delivery is provided to all customers for a fee. Charges for home delivery are permissible if home delivery is not considered an alternative to barrier removal. If the public accommodation offers an alternative, such as curb, carry-out, or sidewalk service for which no surcharge is assessed, then it may charge for home delivery in accordance with its standard pricing for home delivery.

In addition, §36.301 prohibits the imposition of criteria that "tend to" screen out an individual with a disability. This concept, which is derived from current regulations under section 504 (see, *e.g.*, 45 CFR 84.13), makes it discriminatory to impose policies or criteria that, while not creating a direct bar to individuals with disabilities, indirectly prevent or limit their ability to participate. For example, requiring presentation of a driver's license as the sole means of identification for purposes of paying by check would violate this section in situations where, for example, individuals with severe vision impairments or developmental disabilities or epilepsy are ineligible to receive a driver's license and the use of an alternative means of identification, such as another photo I.D. or credit card, is feasible.

A public accommodation may, however, impose neutral rules and criteria that screen out, or tend to screen out, individuals with disabilities, if the criteria are necessary for the safe operation of the public accommodation. Examples of safety qualifications that would be justifiable in appropriate circumstances would include height requirements for certain amusement park rides or a requirement that all participants in a recreational rafting expedition be able to meet a necessary level of swimming proficiency. Safety requirements must be based on actual risks and not on speculation, stereotypes, or generalizations about individuals with disabilities.

Section 36.302 Modifications in Policies, Practices, or Procedures

Section 36.302 of the rule prohibits the failure to make reasonable modifications in policies, practices, and procedures when such modifications may be necessary to afford any goods, services, facilities, privileges, advantages, or accommodations, unless the entity can demonstrate that making such modifications would fundamentally alter the nature of such goods, services, facilities, privileges, advantages, or accommodations. This prohibition is based on section 302(b)(2)(A)(ii) of the ADA.

For example, a parking facility would be required to modify a rule barring all vans or all vans with raised roofs, if an individual who uses a wheelchair-accessible van wishes to park in that facility, and if overhead structures are high enough to accommodate

the height of the van. A department store may need to modify a policy of only permitting one person at a time in a dressing room, if an individual with mental retardation needs and requests assistance in dressing from a companion. Public accommodations may need to revise operational policies to ensure that services are available to individuals with disabilities. For instance, a hotel may need to adopt a policy of keeping an accessible room unoccupied until an individual with a disability arrives at the hotel, assuming the individual has properly reserved the room.

One example of application of this principle is specifically included in a new §36.302(d) on check-out aisles. That paragraph provides that a store with check-out aisles must ensure that an adequate number of accessible check-out aisles is kept open during store hours, or must otherwise modify its policies and practices, in order to ensure that an equivalent level of convenient service is provided to individuals with disabilities as is provided to others. For example, if only one check-out aisle is accessible, and it is generally used for express service, one way of providing equivalent service is to allow persons with mobility impairments to make all of their purchases at that aisle. This principle also applies with respect to other accessible elements and services. For example, a particular bank may be in compliance with the accessibility guidelines for new construction incorporated in appendix A with respect to automated teller machines (ATM) at a new branch office by providing one accessible walk-up machine at that location, even though an adjacent walk-up ATM is not accessible and the drive-up ATM is not accessible. However, the bank would be in violation of this section if the accessible ATM was located in a lobby that was locked during evening hours while the drive-up ATM was available to customers without disabilities during those same hours. The bank would need to ensure that the accessible ATM was available to customers during the hours that any of the other ATM's was available.

A number of commenters inquired as to the relationship between this section and §36.307, "Accessible or special goods." Under §36.307, a public accommodation is not required to alter its inventory to include accessible or special goods that are designed for, or facilitate use by, individuals with disabilities. The rule enunciated in §36.307 is consistent with the "fundamental alteration" defense to the reasonable modifications requirement of §36.302. Therefore, §36.302 would not require the inventory of goods provided by a public accommodation to be altered to include goods with accessibility features. For example, §36.302 would not require a bookstore to stock Brailled books or order Brailled books, if it does not do so in the normal course of its business.

The rule does not require modifications to the legitimate areas of specialization of service providers. Section 36.302(b) provides that a public accommodation may refer an individual with a disability to another public accommodation, if that individual is seeking, or requires, treatment or services outside of the referring public accommodation's area of specialization, and if, in the normal course of its operations, the referring public accommodation would make a similar referral for an individual without a disability who seeks or requires the same treatment or services.

For example, it would not be discriminatory for a physician who specializes only in burn treatment to refer an individual who is deaf to another physician for treatment of an injury other than a burn injury. To require a physician to accept patients outside of his or her specialty would fundamentally alter the nature of the medical practice and, therefore, not be required by this section.

A clinic specializing exclusively in drug rehabilitation could similarly refuse to treat a person who is not a drug addict, but could not refuse to treat a person who is a drug addict simply because the patient tests positive for HIV. Conversely, a clinic that specializes in the treatment of individuals with HIV could refuse to treat an individual that does not have HIV, but could not refuse to treat a person for HIV infection simply because that person is also a drug addict.

Some commenters requested clarification as to how this provision would apply to situations where manifestations of the disability in question, itself, would raise complications requiring the expertise of a different practitioner. It is not the Department's intention in §36.302(b) to prohibit a physician from referring an individual with a disability to another physician, if the disability itself creates specialized complications for the patient's health that the physician lacks the experience or knowledge to address (see Education and Labor report at 106).

Section 36.302(c)(1) requires that a public accommodation modify its policies, practices, or procedures to permit the use of a service animal by an individual with a disability in any area open to the general public. The term "service animal" is defined in §36.104 to include guide dogs, signal dogs, or any other animal individually trained to provide assistance to an individual with a disability.

A number of commenters pointed to the difficulty of making the distinction required by the proposed rule between areas open to the general public and those that are not. The ambiguity and uncertainty surrounding these provisions has led the Department to adopt a single standard for all public accommodations.

Section 36.302(c)(1) of the final rule now provides that "[g]enerally, a public accommodation shall modify policies, practices, and procedures to permit the use of a service animal by an individual with a disability." This formulation reflects the general intent of Congress that public accommodations take the necessary steps to accommodate service animals and to ensure that individuals with disabilities are not separated from their service animals. It is intended that the broadest feasible access be provided to service animals in all places of public accommodation, including movie theaters, restaurants, hotels, retail stores, hospitals, and nursing homes (see Education and Labor report at 106; Judiciary report at 59). The section also acknowledges, however, that, in rare circumstances, accommodation of service animals may not be required because a fundamental alteration would result in the nature of the goods, services, facilities, privileges, or accommodations offered or provided, or the safe operation of the public accommodation would be jeopardized.

As specified in §36.302(c)(2), the rule does not require a public accommodation to supervise or care for any service animal. If a service animal must be separated from an individual with a disability in order to avoid a fundamental alteration or a threat to safety, it is the responsibility of the individual with the disability to arrange for the care and supervision of the animal during the period of separation.

A museum would not be required by §36.302 to modify a policy barring the touching of delicate works of art in order to enhance the participation of individuals who are blind, if the touching threatened the integrity of the work. Damage to a museum piece would clearly be a fundamental alteration that is not required by this section.

Section 36.303 Auxiliary Aids and Services.

Section 36.303 of the final rule requires a public accommodation to take such steps as may be necessary to ensure that no individual with a disability is excluded, denied services, segregated or otherwise treated differently than other individuals because of the absence of auxiliary aids and services, unless the public accommodation can demonstrate that taking such steps would fundamentally alter the nature of the goods, services, facilities, advantages, or accommodations being offered or would result in an undue burden. This requirement is based on section 302(b)(2)(A)(iii) of the ADA.

Implicit in this duty to provide auxiliary aids and services is the underlying obligation of a public accommodation to communicate effectively with its customers, clients, patients, or participants who have disabilities affecting hearing, vision, or speech. To give emphasis to this underlying obligation, §36.303(c) of the rule incorporates language derived from section 504 regulations for federally conducted programs (see *e.g.*, 28 CFR 39.160(a)) that requires that appropriate auxiliary aids and services be furnished to ensure that communication with persons with disabilities is as effective as communication with others.

Auxiliary aids and services include a wide range of services and devices for ensuring effective communication. Use of the most advanced technology is not required so long as effective communication is ensured. The Department's proposed §36.303(b) provided a list of examples of auxiliary aids and services that was taken from the definition of auxiliary aids and services in section 3(1) of the ADA and was supplemented by examples from regulations implementing section 504 in federally conducted programs (see *e.g.*, 28 CFR 39.103). A substantial number of commenters suggested that additional examples be added to this list. The Department has added several items to this list but wishes to clarify that the list is not an all-inclusive or exhaustive catalogue of possible or available auxiliary aids or services. It is not possible to provide an exhaustive list, and such an attempt would omit new devices that will become available with emerging technology.

The Department has added videotext displays, computer-aided transcription services, and open and closed captioning to the list of examples. Videotext displays have become an important means of accessing auditory communications through a public address system. Transcription services are used to relay aurally delivered material almost simultaneously in written form to persons who are deaf or hard of hearing. This technology is often used at conferences, conventions, and hearings. While the proposed rule expressly included television decoder equipment as an auxiliary aid or service, it did not mention captioning itself. The final rule rectifies this omission by mentioning both closed and open captioning.

In this section, the Department has changed the proposed rule's phrase, "orally delivered materials," to the phrase, "aurally delivered materials." This new phrase tracks the language in the definition of "auxiliary aids and services" in section 3 of the ADA and is meant to include nonverbal sounds and alarms and computer-generated speech.

Several persons and organizations requested that the Department replace the term "telecommunications devices for deaf persons" or "TDD's" with the term "text telephone." The Department has declined to do so. The Department is aware that the Architectural and Transportation Barriers Compliance Board has used the phrase "text telephone" in lieu of the statutory term "TDD" in its final accessibility guidelines. Title IV of the ADA, however, uses the term "Telecommunications Device for the Deaf," and

the Department believes it would be inappropriate to abandon this statutory term at this time.

Paragraph (b)(2) lists examples of aids and services for making visually delivered materials accessible to persons with visual impairments. Many commenters proposed additional examples such as signage or mapping, audio description services, secondary auditory programs (SAP), telebraillers, and reading machines. While the Department declines to add these items to the list in the regulation, they may be considered appropriate auxiliary aids and services.

Paragraph (b)(3) refers to the acquisition or modification of equipment or devices. For example, tape players used for an audio-guided tour of a museum exhibit may require the addition of Brailled adhesive labels to the buttons on a reasonable number of the tape players to facilitate their use by individuals who are blind. Similarly, permanent or portable assistive listening systems for persons with hearing impairments may be required at a hotel conference center.

Several commenters suggested the addition of current technological innovations in microelectronics and computerized control systems (e.g., voice recognition systems, automatic dialing telephones, and infrared elevator and light control systems) to the list of auxiliary aids and services. The Department interprets auxiliary aids and services as those aids and services designed to provide effective communications, i. e., making aurally and visually delivered information available to persons with hearing, speech, and vision impairments. Methods of making services, programs, or activities accessible to, or usable by, individuals with mobility or manual dexterity impairments are addressed by other sections of this part, including the requirements for modifications in policies, practices, or procedures (§36.302), the elimination of existing architectural barriers (§36.304), and the provision of alternatives to barriers removal (§36.305).

Paragraph (b)(4) refers to other similar services and actions. Several commenters asked for clarification that "similar services and actions" include retrieving items from shelves, assistance in reaching a marginally accessible seat, pushing a barrier aside in order to provide an accessible route, or assistance in removing a sweater or coat. While retrieving an item from a shelf might be an "auxiliary aid or service" for a blind person who could not locate the item without assistance, it might be a readily achievable alternative to barrier removal for a person using a wheelchair who could not reach the shelf, or a reasonable modification to a self-service policy for an individual who lacked the ability to grasp the item. (Of course, a store would not be required to provide a personal shopper.) As explained above, auxiliary aids and services are those aids and services required to provide effective communications. Other forms of assistance are more appropriately addressed by other provisions of the final rule.

The auxiliary aid requirement is a flexible one. A public accommodation can choose among various alternatives as long as the result is effective communication. For example, a restaurant would not be required to provide menus in Braille for patrons who are blind, if the waiters in the restaurant are made available to read the menu. Similarly, a clothing boutique would not be required to have Brailled price tags if sales personnel provide price information orally upon request; and a bookstore would not be required to make available a sign language interpreter, because effective communication can be conducted by notepad.

A critical determination is what constitutes an effective auxiliary aid or service. The Department's proposed rule recommended that, in determining what auxiliary aid to use, the public accommodation consult with an individual before providing him or her with a particular auxiliary aid or service. This suggestion sparked a significant volume of public comment. Many persons with disabilities, particularly persons who are deaf or hard of hearing, recommended that the rule should require that public accommodations give "primary consideration" to the "expressed choice" of an individual with a disability. These commenters asserted that the proposed rule was inconsistent with congressional intent of the ADA, with the Department's proposed rule implementing title II of the ADA, and with longstanding interpretations of section 504 of the Rehabilitation Act.

Based upon a careful review of the ADA legislative history, the Department believes that Congress did not intend under title III to impose upon a public accommodation the requirement that it give primary consideration to the request of the individual with a disability. To the contrary, the legislative history demonstrates congressional intent to strongly encourage consulting with persons with disabilities. In its analysis of the ADA's auxiliary aids requirement for public accommodations, the House Education and Labor Committee stated that it "expects" that "public accommodation(s) will consult with the individual with a disability before providing a particular auxiliary aid or service" (Education and Labor report at 107). Some commenters also cited a different committee statement that used mandatory language as evidence of legislative intent to require primary consideration. However, this statement was made in the context of reasonable accommodations required by title I with respect to employment (Education and Labor report at 67). Thus, the Department finds that strongly encouraging consultation with

persons with disabilities, in lieu of mandating primary consideration of their expressed choice, is consistent with congressional intent.

The Department wishes to emphasize that public accommodations must take steps necessary to ensure that an individual with a disability will not be excluded, denied services, segregated or otherwise treated differently from other individuals because of the use of inappropriate or ineffective auxiliary aids. In those situations requiring an interpreter, the public accommodations must secure the services of a qualified interpreter, unless an undue burden would result.

In the analysis of §36.303(c) in the proposed rule, the Department gave as an example the situation where a note pad and written materials were insufficient to permit effective communication in a doctor's office when the matter to be decided was whether major surgery was necessary. Many commenters objected to this statement, asserting that it gave the impression that only decisions about major surgery would merit the provision of a sign language interpreter. The statement would, as the commenters also claimed, convey the impression to other public accommodations that written communications would meet the regulatory requirements in all but the most extreme situations. The Department, when using the example of major surgery, did not intend to limit the provision of interpreter services to the most extreme situations.

Other situations may also require the use of interpreters to ensure effective communication depending on the facts of the particular case. It is not difficult to imagine a wide range of communications involving areas such as health, legal matters, and finances that would be sufficiently lengthy or complex to require an interpreter for effective communication. In some situations, an effective alternative to use of a notepad or an interpreter may be the use of a computer terminal upon which the representative of the public accommodation and the customer or client can exchange typewritten messages.

Section 36.303(d) specifically addresses requirements for TDD's. Partly because of the availability of telecommunications relay services to be established under title IV of the ADA, §36.303(d)(2) provides that a public accommodation is not required to use a telecommunication device for the deaf (TDD) in receiving or making telephone calls incident to its operations. Several commenters were concerned that relay services would not be sufficient to provide effective access in a number of situations. Commenters argued that relay systems (1) do not provide effective access to the automated systems that require the caller to respond by pushing a button on a touch tone phone, (2) cannot operate fast enough to convey messages on answering machines, or to permit a TDD user to leave a recorded message, and (3) are not appropriate for calling crisis lines relating to such matters as rape, domestic violence, child abuse, and drugs where confidentiality is a concern. The Department believes that it is more appropriate for the Federal Communications Commission to address these issues in its rulemaking under title IV.

A public accommodation is, however, required to make a TDD available to an individual with impaired hearing or speech, if it customarily offers telephone service to its customers, clients, patients, or participants on more than an incidental convenience basis. Where entry to a place of public accommodation requires use of a security entrance telephone, a TDD or other effective means of communication must be provided for use by an individual with impaired hearing or speech.

In other words, individual retail stores, doctors' offices, restaurants, or similar establishments are not required by this section to have TDD's, because TDD users will be able to make inquiries, appointments, or reservations with such establishments through the relay system established under title IV of the ADA. The public accommodation will likewise be able to contact TDD users through the relay system. On the other hand, hotels, hospitals, and other similar establishments that offer nondisabled individuals the opportunity to make outgoing telephone calls on more than an incidental convenience basis must provide a TDD on request.

Section 36.303(e) requires places of lodging that provide televisions in five or more guest rooms and hospitals to provide, upon request, a means for decoding closed captions for use by an individual with impaired hearing. Hotels should also provide a TDD or similar device at the front desk in order to take calls from guests who use TDD's in their rooms. In this way guests with hearing impairments can avail themselves of such hotel services as making inquiries of the front desk and ordering room service. The term "hospital" is used in its general sense and should be interpreted broadly.

Movie theaters are not required by §36.303 to present open-captioned films. However, other public accommodations that impart verbal information through soundtracks on films, video tapes, or slide shows are required to make such information accessible to persons with hearing impairments. Captioning is one means to make the information accessible to individuals with disabilities.

The rule specifies that auxiliary aids and services include the acquisition or modification of equipment or devices. For example, tape players used for an audio-guided tour of a museum exhibit may require the addition of Brailled adhesive labels to the buttons on a reasonable number of the tape players to

facilitate their use by individuals who are blind. Similarly, a hotel conference center may need to provide permanent or portable assistive listening systems for persons with hearing impairments.

As provided in §36.303(f), a public accommodation is not required to provide any particular aid or service that would result either in a fundamental alteration in the nature of the goods, services, facilities, privileges, advantages, or accommodations offered or in an undue burden. Both of these statutory limitations are derived from existing regulations and caselaw under section 504 and are to be applied on a case-by-case basis (see, e.g., 28 CFR 39.160(d) and *Southeastern Community College* v. *Davis,* 442 U.S. 397 (1979)). Congress intended that "undue burden" under §36.303 and "undue hardship," which is used in the employment provisions of title I of the ADA, should be determined on a case-by-case basis under the same standards and in light of the same factors (Judiciary report at 59). The rule, therefore, in accordance with the definition of undue hardship in section 101(10) of the ADA, defines undue burden as "significant difficulty or expense" (see §§36.104 and 36.303(a)) and requires that undue burden be determined in light of the factors listed in the definition in 36.104.

Consistent with regulations implementing section 504 in federally conducted programs (see, e.g., 28 CFR 39.160(d)), §36.303(f) provides that the fact that the provision of a particular auxiliary aid or service would result in an undue burden does not relieve a public accommodation from the duty to furnish an alternative auxiliary aid or service, if available, that would not result in such a burden.

Section 36.303(g) of the proposed rule has been deleted from this section and included in a new §36.306. That new section continues to make clear that the auxiliary aids requirement does not mandate the provision of individually prescribed devices, such as prescription eyeglasses or hearing aids.

The costs of compliance with the requirements of this section may not be financed by surcharges limited to particular individuals with disabilities or any group of individuals with disabilities (§36.301(c)).

Section 36.304 Removal of Barriers

Section 36.304 requires the removal of architectural barriers and communication barriers that are structural in nature in existing facilities, where such removal is readily achievable, i.e., easily accomplishable and able to be carried out without much difficulty or expense. This requirement is based on section 302(b)(2)(A)(iv) of the ADA.

A number of commenters interpreted the phrase "communication barriers that are structural in nature" broadly to encompass the provision of communications devices such as TDD's, telephone handset amplifiers, assistive listening devices, and digital check-out displays. The statute, however, as read by the Department, limits the application of the phrase "communications barriers that are structural in nature" to those barriers that are an integral part of the physical structure of a facility. In addition to the communications barriers posed by permanent signage and alarm systems noted by Congress (see Education and Labor report at 110), the Department would also include among the communications barriers covered by §36.304 the failure to provide adequate sound buffers, and the presence of physical partitions that hamper the passage of sound waves between employees and customers. Given that §36.304's proper focus is on the removal of physical barriers, the Department believes that the obligation to provide communications equipment and devices such as TDD's, telephone handset amplifiers, assistive listening devices, and digital check-out displays is more appropriately determined by the requirements for auxiliary aids and services under §36.303 (see Education and Labor report at 107–108). The obligation to remove communications barriers that are structural in nature under §36.304, of course, is independent of any obligation to provide auxiliary aids and services under §36.303.

The statutory provision also requires the readily achievable removal of certain barriers in existing vehicles and rail passenger cars. This transportation requirement is not included in §36.304, but rather in §36.310(b) of the rule.

In striking a balance between guaranteeing access to individuals with disabilities and recognizing the legitimate cost concerns of businesses and other private entities, the ADA establishes different standards for existing facilities and new construction. In existing facilities, which are the subject of §36.304, where retrofitting may prove costly, a less rigorous degree of accessibility is required than in the case of new construction and alterations (see §§36.401–36.406) where accessibility can be more conveniently and economically incorporated in the initial stages of design and construction.

For example, a bank with existing automatic teller machines (ATM's) would have to remove barriers to the use of the ATM's, if it is readily achievable to do so. Whether or not it is necessary to take actions such as ramping a few steps or raising or lowering an ATM would be determined by whether the actions can be accomplished easily and without much difficulty or expense.

On the other hand, a newly constructed bank with ATM's would be required by §36.401 to have an ATM that is "readily accessible to and usable by" persons with disabilities in accordance with accessibility guidelines incorporated under §36.406.

The requirement to remove architectural barriers includes the removal of physical

barriers of any kind. For example, §36.304 requires the removal, when readily achievable, of barriers caused by the location of temporary or movable structures, such as furniture, equipment, and display racks. In order to provide access to individuals who use wheelchairs, for example, restaurants may need to rearrange tables and chairs, and department stores may need to reconfigure display racks and shelves. As stated in §36.304(f), such actions are not readily achievable to the extent that they would result in a significant loss of selling or serving space. If the widening of all aisles in selling or serving areas is not readily achievable, then selected widening should be undertaken to maximize the amount of merchandise or the number of tables accessible to individuals who use wheelchairs. Access to goods and services provided in any remaining inaccessible areas must be made available through alternative methods to barrier removal, as required by §36.305.

Because the purpose of title III of the ADA is to ensure that public accommodations are accessible to their customers, clients, or patrons (as opposed to their employees, who are the focus of title I), the obligation to remove barriers under §36.304 does not extend to areas of a facility that are used exclusively as employee work areas.

Section 36.304(b) provides a wide-ranging list of the types of modest measures that may be taken to remove barriers and that are likely to be readily achievable. The list includes examples of measures, such as adding raised letter markings on elevator control buttons and installing flashing alarm lights, that would be used to remove communications barriers that are structural in nature. It is not an exhaustive list, but merely an illustrative one. Moreover, the inclusion of a measure on this list does not mean that it is readily achievable in all cases. Whether or not any of these measures is readily achievable is to be determined on a case-by-case basis in light of the particular circumstances presented and the factors listed in the definition of readily achievable (§36.104).

A public accommodation generally would not be required to remove a barrier to physical access posed by a flight of steps, if removal would require extensive ramping or an elevator. Ramping a single step, however, will likely be readily achievable, and ramping several steps will in many circumstances also be readily achievable. The readily achievable standard does not require barrier removal that requires extensive restructuring or burdensome expense. Thus, where it is not readily achievable to do, the ADA would not require a restaurant to provide access to a restroom reachable only by a flight of stairs.

Like §36.405, this section permits deference to the national interest in preserving significant historic structures. Barrier removal would not be considered "readily achievable" if it would threaten or destroy the historic significance of a building or facility that is eligible for listing in the National Register of Historic Places under the National Historic Preservation Act (16 U.S.C. 470, *et seq.*), or is designated as historic under State or local law.

The readily achievable defense requires a less demanding level of exertion by a public accommodation than does the undue burden defense to the auxiliary aids requirements of §36.303. In that sense, it can be characterized as a "lower" standard than the undue burden standard. The readily achievable defense is also less demanding than the undue hardship defense in section 102(b)(5) of the ADA, which limits the obligation to make reasonable accommodation in employment. Barrier removal measures that are not easily accomplishable and are not able to be carried out without much difficulty or expense are not required under the readily achievable standard, even if they do not impose an undue burden or an undue hardship.

Section 36.304(f)(1) of the proposed rule, which stated that "barrier removal is not readily achievable if it would result in significant loss of profit or significant loss of efficiency of operation," has been deleted from the final rule. Many commenters objected to this provision because it impermissibly introduced the notion of profit into a statutory standard that did not include it. Concern was expressed that, in order for an action not to be considered readily achievable, a public accommodation would inappropriately have to show, for example, not only that the action could not be done without "much difficulty or expense", but that a significant loss of profit would result as well. In addition, some commenters asserted use of the word "significant," which is used in the definition of undue hardship under title I (the standard for interpreting the meaning of undue burden as a defense to title III's auxiliary aids requirements) (see §§36.104, 36.303(f)), blurs the fact that the readily achievable standard requires a lower level of effort on the part of a public accommodation than does the undue burden standard.

The obligation to engage in readily achievable barrier removal is a continuing one. Over time, barrier removal that initially was not readily achievable may later be required because of changed circumstances. Many commenters expressed support for the Department's position that the obligation to comply with §36.304 is continuing in nature. Some urged that the rule require public accommodations to assess their compliance on at least an annual basis in light of changes in resources and other factors that would be relevant to determining what barrier removal measures would be readily achievable.

Although the obligation to engage in readily achievable barrier removal is clearly a continuing duty, the Department has declined to establish any independent requirement for an annual assessment or self-evaluation. It is best left to the public accommodations subject to §36.304 to establish policies to assess compliance that are appropriate to the particular circumstances faced by the wide range of public accommodations covered by the ADA. However, even in the absence of an explicit regulatory requirement for periodic self-evaluations, the Department still urges public accommodations to establish procedures for an ongoing assessment of their compliance with the ADA's barrier removal requirements. The Department recommends that this process include appropriate consultation with individuals with disabilities or organizations representing them. A serious effort at self-assessment and consultation can diminish the threat of litigation and save resources by identifying the most efficient means of providing required access.

The Department has been asked for guidance on the best means for public accommodations to comply voluntarily with this section. Such information is more appropriately part of the Department's technical assistance effort and will be forthcoming over the next several months. The Department recommends, however, the development of an implementation plan designed to achieve compliance with the ADA's barrier removal requirements before they become effective on January 26, 1992. Such a plan, if appropriately designed and diligently executed, could serve as evidence of a good faith effort to comply with the requirements of §36.104. In developing an implementation plan for readily achievable barrier removal, a public accommodation should consult with local organizations representing persons with disabilities and solicit their suggestions for cost-effective means of making individual places of public accommodation accessible. Such organizations may also be helpful in allocating scarce resources and establishing priorities. Local associations of businesses may want to encourage this process and serve as the forum for discussions on the local level between disability rights organizations and local businesses.

Section 36.304(c) recommends priorities for public accommodations in removing barriers in existing facilities. Because the resources available for barrier removal may not be adequate to remove all existing barriers at any given time, §36.304(c) suggests priorities for determining which types of barriers should be mitigated or eliminated first. The purpose of these priorities is to facilitate long-term business planning and to maximize, in light of limited resources, the degree of effective access that will result from any given level of expenditure.

Although many commenters expressed support for the concept of establishing priorities, a significant number objected to their mandatory nature in the proposed rule. The Department shares the concern of these commenters that mandatory priorities would increase the likelihood of litigation and inappropriately reduce the discretion of public accommodations to determine the most effective mix of barrier removal measures to undertake in particular circumstances. Therefore, in the final rule the priorities are no longer mandatory.

In response to comments that the priorities failed to address communications issues, the Department wishes to emphasize that the priorities encompass the removal of communications barriers that are structural in nature. It would be counter to the ADA's carefully wrought statutory scheme to include in this provision the wide range of communication devices that are required by the ADA's provisions on auxiliary aids and services. The final rule explicitly includes Brailled and raised letter signage and visual alarms among the examples of steps to remove barriers provided in §36.304(c)(2).

Section 36.304(c)(1) places the highest priority on measures that will enable individuals with disabilities to physically enter a place of public accommodation. This priority on "getting through the door" recognizes that providing actual physical access to a facility from public sidewalks, public transportation, or parking is generally preferable to any alternative arrangements in terms of both business efficiency and the dignity of individuals with disabilities.

The next priority, which is established in §36.304(c)(2), is for measures that provide access to those areas of a place of public accommodation where goods and services are made available to the public. For example, in a hardware store, to the extent that it is readily achievable to do so, individuals with disabilities should be given access not only to assistance at the front desk, but also access, like that available to other customers, to the retail display areas of the store.

The Department agrees with those commenters who argued that access to the areas where goods and services are provided is generally more important than the provision of restrooms. Therefore, the final rule reverses priorities two and three of the proposed rule in order to give lower priority to accessible restrooms. Consequently, the third priority in the final rule (§36.304(c)(3)) is for measures to provide access to restroom facilities and the last priority is placed on any remaining measures required to remove barriers.

Section 36.304(d) requires that measures taken to remove barriers under §36.304 be subject to subpart D's requirements for alterations (except for the path of travel requirements in §36.403). It only permits deviations from the subpart D requirements

when compliance with those requirements is not readily achievable. In such cases, §36.304(d) permits measures to be taken that do not fully comply with the subpart D requirements, so long as the measures do not pose a significant risk to the health or safety of individuals with disabilities or others.

This approach represents a change from the proposed rule which stated that "readily achievable" measures taken solely to remove barriers under §36.304 are exempt from the alterations requirements of subpart D. The intent of the proposed rule was to maximize the flexibility of public accommodations in undertaking barrier removal by allowing deviations from the technical standards of subpart D. It was thought that allowing slight deviations would provide access and release additional resources for expanding the amount of barrier removal that could be obtained under the readily achievable standard.

Many commenters, however, representing both businesses and individuals with disabilities, questioned this approach because of the likelihood that unsafe or ineffective measures would be taken in the absence of the subpart D standards for alterations as a reference point. Some advocated a rule requiring strict compliance with the subpart D standard.

The Department in the final rule has adopted the view of many commenters that (1) public accommodations should in the first instance be required to comply with the subpart D standards for alterations where it is readily achievable to do so and (2) safe, readily achievable measures must be taken when compliance with the subpart D standards is not readily achievable. Reference to the subpart D standards in this manner will promote certainty and good design at the same time that permitting slight deviations will expand the amount of barrier removal that may be achieved under §36.304.

Because of the inconvenience to individuals with disabilities and the safety problems involved in the use of portable ramps, §36.304(e) permits the use of a portable ramp to comply with §36.304(a) only when installation of a permanent ramp is not readily achievable. In order to promote safety, §36.304(e) requires that due consideration be given to the incorporation of features such as nonslip surfaces, railings, anchoring, and strength of materials in any portable ramp that is used.

Temporary facilities brought in for use at the site of a natural disaster are subject to the barrier removal requirements of §36.304.

A number of commenters requested clarification regarding how to determine when a public accommodation has discharged its obligation to remove barriers in existing facilities. For example, is a hotel required by §36.304 to remove barriers in all of its guest rooms? Or is some lesser percentage adequate? A new paragraph (g) has been added to §36.304 to address this issue. The Department believes that the degree of barrier removal required under §36.304 may be less, but certainly would not be required to exceed, the standards for alterations under the ADA Accessibility Guidelines incorporated by subpart D of this part (ADAAG). The ADA's requirements for readily achievable barrier removal in existing facilities are intended to be substantially less rigorous than those for new construction and alterations. It, therefore, would be obviously inappropriate to require actions under §36.304 that would exceed the ADAAG requirements. Hotels, then, in order to satisfy the requirements of §36.304, would not be required to remove barriers in a higher percentage of rooms than required by ADAAG. If relevant standards for alterations are not provided in ADAAG, then reference should be made to the standards for new construction.

Section 36.305 Alternatives to Barrier Removal

Section 36.305 specifies that where a public accommodation can demonstrate that removal of a barrier is not readily achievable, the public accommodation must make its goods, services, facilities, privileges, advantages, or accommodations available through alternative methods, if such methods are readily achievable. This requirement is based on section 302(b)(2)(A)(v) of the ADA.

For example, if it is not readily achievable for a retail store to raise, lower, or remove shelves or to rearrange display racks to provide accessible aisles, the store must, if readily achievable, provide a clerk or take other alternative measures to retrieve inaccessible merchandise. Similarly, if it is not readily achievable to ramp a long flight of stairs leading to the front door of a restaurant or a pharmacy, the restaurant or the pharmacy must take alternative measures, if readily achievable, such as providing curb service or home delivery. If, within a restaurant, it is not readily achievable to remove physical barriers to a certain section of a restaurant, the restaurant must, where it is readily achievable to do so, offer the same menu in an accessible area of the restaurant.

Where alternative methods are used to provide access, a public accommodation may not charge an individual with a disability for the costs associated with the alternative method (see §36.301(c)). Further analysis of the issue of charging for alternative measures may be found in the preamble discussion of §36.301(c).

In some circumstances, because of security considerations, some alternative methods may not be readily achievable. The rule does not require a cashier to leave his or her post to retrieve items for individuals with disabilities, if there are no other employees on duty.

Section 36.305(c) of the proposed rule has been deleted and the requirements have been included in a new §36.306. That section makes clear that the alternative methods requirement does not mandate the provision of personal devices, such as wheelchairs, or services of a personal nature.

In the final rule, §36.305(c) provides specific requirements regarding alternatives to barrier removal in multiscreen cinemas. In some situations, it may not be readily achievable to remove enough barriers to provide access to all of the theaters of a multiscreen cinema. If that is the case, §36.305(c) requires the cinema to establish a film rotation schedule that provides reasonable access for individuals who use wheelchairs to films being presented by the cinema. It further requires that reasonable notice be provided to the public as to the location and time of accessible showings. Methods for providing notice include appropriate use of the international accessibility symbol in a cinema's print advertising and the addition of accessibility information to a cinema's recorded telephone information line.

Section 36.306 Personal Devices and Services

The final rule includes a new §36.306, entitled "Personal devices and services." Section 36.306 of the proposed rule, "Readily achievable and undue burden: Factors to be considered," was deleted for the reasons described in the preamble discussion of the definition of the term "readily achievable" in §36.104. In place of §§36.303(g) and 36.305(c) of the proposed rule, which addressed the issue of personal devices and services in the contexts of auxiliary aids and alternatives to barrier removal, §36.306 provides a general statement that the regulation does not require the provision of personal devices and services. This section states that a public accommodation is not required to provide its customers, clients, or participants with personal devices, such as wheelchairs; individually prescribed devices, such as prescription eyeglasses or hearing aids; or services of a personal nature including assistance in eating, toileting, or dressing.

This statement serves as a limitation on all the requirements of the regulation. The personal devices and services limitation was intended to have general application in the proposed rule in all contexts where it was relevant. The final rule, therefore, clarifies, this point by including a general provision that will explicitly apply not just to auxiliary aids and services and alternatives to barrier removal, but across-the-board to include such relevant areas as modifications in policies, practices, and procedures (§36.302) and examinations and courses (§36.309), as well.

The Department wishes to clarify that measures taken as alternatives to barrier removal, such as retrieving items from shelves or providing curb service or home delivery, are not to be considered personal services. Similarly, minimal actions that may be required as modifications in policies, practices, or procedures under §36.302, such as a waiter's removing the cover from a customer's straw, a kitchen's cutting up food into smaller pieces, or a bank's filling out a deposit slip, are not services of a personal nature within the meaning of §36.306. (Of course, such modifications may be required under §36.302 only if they are "reasonable.") Similarly, this section does not preclude the short-term loan of personal receivers that are part of an assistive listening system.

Of course, if personal services are customarily provided to the customers or clients of a public accommodation, e.g., in a hospital or senior citizen center, then these personal services should also be provided to persons with disabilities using the public accommodation.

Section 36.307 Accessible or Special Goods.

Section 36.307 establishes that the rule does not require a public accommodation to alter its inventory to include accessible or special goods with accessibility features that are designed for, or facilitate use by, individuals with disabilities. As specified in §36.307(c), accessible or special goods include such items as Brailled versions of books, books on audio-cassettes, closed captioned video tapes, special sizes or lines of clothing, and special foods to meet particular dietary needs.

The purpose of the ADA's public accommodations requirements is to ensure accessibility to the goods offered by a public accommodation, not to alter the nature or mix of goods that the public accommodation has typically provided. In other words, a bookstore, for example, must make its facilities and sales operations accessible to individuals with disabilities, but is not required to stock Brailled or large print books. Similarly, a video store must make its facilities and rental operations accessible, but is not required to stock closed-captioned video tapes. The Department has been made aware, however, that the most recent titles in videotape rental establishments are, in fact, closed captioned.

Although a public accommodation is not required by §36.307(a) to modify its inventory, it is required by §36.307(b), at the request of an individual with disabilities, to order accessible or special goods that it does not customarily maintain in stock if, in the normal course of its operation, it makes special orders for unstocked goods, and if the accessible or special goods can be obtained from a supplier with whom the public accommodation customarily does business. For example, a clothing store would be required to order specially-sized clothing at the request

of an individual with a disability, if it customarily makes special orders for clothing that it does not keep in stock, and if the clothing can be obtained from one of the store's customary suppliers.

One commenter asserted that the proposed rule could be interpreted to require a store to special order accessible or special goods of all types, even if only one type is specially ordered in the normal course of its business. The Department, however, intends for §36.307(b) to require special orders only of those particular types of goods for which a public accommodation normally makes special orders. For example, a book and recording store would not have to specially order Brailled books if, in the normal course of its business, it only specially orders recordings and not books.

Section 36.308 Seating in Assembly Areas.

Section 36.308 establishes specific requirements for removing barriers to physical access in assembly areas, which include such facilities as theaters, concert halls, auditoriums, lecture halls, and conference rooms. This section does not address the provision of auxiliary aids or the removal of communications barriers that are structural in nature. These communications requirements are the focus of other provisions of the regulation (see §§36.303–36.304).

Individuals who use wheelchairs historically have been relegated to inferior seating in the back of assembly areas separate from accompanying family members and friends. The provisions of §36.308 are intended to promote integration and equality in seating.

In some instances it may not be readily achievable for auditoriums or theaters to remove seats to allow individuals with wheelchairs to sit next to accompanying family members or friends. In these situations, the final rule retains the requirement that the public accommodation provide portable chairs or other means to allow the accompanying individuals to sit with the persons in wheelchairs. Persons in wheelchairs should have the same opportunity to enjoy movies, plays, and similar events with their families and friends, just as other patrons do. The final rule specifies that portable chairs or other means to permit family members or companions to sit with individuals who use wheelchairs must be provided only when it is readily achievable to do so.

In order to facilitate seating of wheelchair users who wish to transfer to existing seating, paragraph (a)(1) of the final rule adds a requirement that, to the extent readily achievable, a reasonable number of seats with removable aisle-side armrests must be provided. Many persons in wheelchairs are able to transfer to existing seating with this relatively minor modification. This solution avoids the potential safety hazard created by the use of portable chairs and fosters integration. The final ADA Accessibility Guidelines incorporated by subpart D (ADAAG) also add a requirement regarding aisle seating that was not in the proposed guidelines. In situations when a person in a wheelchair transfers to existing seating, the public accommodation shall provide assistance in handling the wheelchair of the patron with the disability.

Likewise, consistent vith ADAAG, the final rule adds in §36.308(a)(1)(ii)(B) a requirement that, to the extent readily achievable, wheelchair seating provide lines of sight and choice of admission prices comparable to those for members of the general public.

Finally, because Congress intended that the requirements for barrier removal in existing facilities be substantially less rigorous than those required for new construction and alterations, the final rule clarifies in §36.308(a)(3) that in no event can the requirements for existing facilities be interpreted to exceed the standards for alterations under ADAAG. For example, §4.33 of ADAAG only requires wheelchair spaces to be provided in more than one location when the seating capacity of the assembly area exceeds 300. Therefore, paragraph (a) of §36.308 may not be interpreted to require readily achievable dispersal of wheelchair seating in assembly areas with 300 or fewer seats. Similarly, §4.1.3(19) of ADAAG requires six accessible wheelchair locations in an assembly area with 301 to 500 seats. The reasonable number of wheelchair locations required by paragraph (a), therefore, may be less than six, but may not be interpreted to exceed six.

Proposed Section 36.309 Purchase of Furniture and Equipment

Section 36.309 of the proposed rule would have required that newly purchased furniture or equipment made available for use at a place of public accommodation be accessible, to the extent such furniture or equipment is available, unless this requirement would fundamentally alter the goods, services, facilities, privileges, advantages, or accommodations offered, or would not be readily achievable. Proposed §36.309 has been omitted from the final rule because the Department has determined that its requirements are more properly addressed under other sections, and because there are currently no appropriate accessibility standards addressing many types of furniture and equipment.

Some types of equipment will be required to meet the accessibility requirements of subpart D. For example, ADAAG establishes technical and scoping requirements in new construction and alterations for automated teller machines and telephones. Purchase or modification of equipment is required in certain instances by the provisions in §§36.201 and 36.202. For example, an arcade may need

to provide accessible video machines in order to ensure full and equal enjoyment of the facilities and to provide an opportunity to participate in the services and facilities it provides. The barrier removal requirements of §36.304 will apply as well to furniture and equipment (lowering shelves, rearranging furniture, adding Braille labels to a vending machine).

Section 36.309 Examinations and Courses

Section 36.309(a) sets forth the general rule that any private entity that offers examinations or courses related to applications, licensing, certification, or credentialing for secondary or postsecondary education, professional, or trade purposes shall offer such examinations or courses in a place and manner accessible to persons with disabilities or offer alternative accessible arrangements for such individuals.

Paragraph (a) restates section 309 of the Americans with Disabilities Act. Section 309 is intended to fill the gap that is created when licensing, certification, and other testing authorities are not covered by section 504 of the Rehabilitation Act or title II of the ADA. Any such authority that is covered by section 504, because of the receipt of Federal money, or by title II, because it is a function of a State or local government, must make all of its programs accessible to persons with disabilities, which includes physical access as well as modifications in the way the test is administered, e.g., extended time, written instructions, or assistance of a reader.

Many licensing, certification, and testing authorities are not covered by section 504, because no Federal money is received; nor are they covered by title II of the ADA because they are not State or local agencies. However, States often require the licenses provided by such authorities in order for an individual to practice a particular profession or trade. Thus, the provision was included in the ADA in order to assure that persons with disabilities are not foreclosed from educational, professional, or trade opportunities because an examination or course is conducted in an inaccessible site or without needed modifications.

As indicated in the "Application" section of this part (§36.102), §36.309 applies to any private entity that offers the specified types of examinations or courses. This is consistent with section 309 of the Americans with Disabilities Act, which states that the requirements apply to "any person" offering examinations or courses.

The Department received a large number of comments on this section, reflecting the importance of ensuring that the key gateways to education and employment are open to individuals with disabilities. The most frequent comments were objections to the fundamental alteration and undue burden provisions in §§36.309 (b)(3) and (c)(3) and to allowing courses and examinations to be provided through alternative accessible arrangements, rather than in an integrated setting.

Although section 309 of the Act does not refer to a fundamental alteration or undue burden limitation, those limitations do appear in section 302(b)(2)(A)(iii) of the Act, which establishes the obligation of public accommodations to provide auxiliary aids and services. The Department, therefore, included it in the paragraphs of §36.309 requiring the provision of auxiliary aids. One commenter argued that similar limitations should apply to all of the requirements of §36.309, but the Department did not consider this extension appropriate.

Commenters who objected to permitting "alternative accessible arrangements" argued that such arrangements allow segregation and should not be permitted, unless they are the least restrictive available alternative, for example, for someone who cannot leave home. Some commenters made a distinction between courses, where interaction is an important part of the educational experience, and examinations, where it may be less important. Because the statute specifically authorizes alternative accessible arrangements as a method of meeting the requirements of section 309, the Department has not adopted this suggestion. The Department notes, however, that, while examinations of the type covered by §36.309 may not be covered elsewhere in the regulation, courses will generally be offered in a "place of education," which is included in the definition of "place of public accommodation" in §36.104, and, therefore, will be subject to the integrated setting requirement of §36.203.

Section 36.309(b) sets forth specific requirements for examinations. Examinations covered by this section would include a bar exam or the Scholastic Aptitude Test prepared by the Educational Testing Service. Paragraph (b)(1) is adopted from the Department of Education's section 504 regulation on admission tests to postsecondary educational programs (34 CFR 104.42(b)(3)). Paragraph (b)(1)(i) requires that a private entity offering an examination covered by the section must assure that the examination is selected and administered so as to best ensure that the examination accurately reflects an individual's aptitude or achievement level or other factor the examination purports to measure, rather than reflecting the individual's impaired sensory, manual, or speaking skills (except where those skills are the factors that the examination purports to measure).

Paragraph (b)(1)(ii) requires that any examination specially designed for individuals with disabilities be offered as often and in as timely a manner as other examinations. Some commenters noted that persons with disabilities may be required to travel long

distances when the locations for examinations for individuals with disabilities are limited, for example, to only one city in a State instead of a variety of cities. The Department has therefore revised this paragraph to add a requirement that such examinations be offered at locations that are as convenient as the location of other examinations.

Commenters representing organizations that administer tests wanted to be able to require individuals with disabilities to provide advance notice and appropriate documentation, at the applicants' expense, of their disabilities and of any modifications or aids that would be required. The Department agrees that such requirements are permissible, provided that they are not unreasonable and that the deadline for such notice is no earlier than the deadline for others applying to take the examination. Requiring individuals with disabilities to file earlier applications would violate the requirement that examinations designed for individuals with disabilities be offered in as timely a manner as other examinations.

Examiners may require evidence that an applicant is entitled to modifications or aids as required by this section, but requests for documentation must be reasonable and must be limited to the need for the modification or aid requested. Appropriate documentation might include a letter from a physician or other professional, or evidence of a prior diagnosis or accommodation, such as eligibility for a special education program. The applicant may be required to bear the cost of providing such documentation, but the entity administering the examination cannot charge the applicant for the cost of any modifications or auxiliary aids, such as interpreters, provided for the examination.

Paragraph (b)(1)(iii) requires that examinations be administered in facilities that are accessible to individuals with disabilities or alternative accessible arrangements are made.

Paragraph (b)(2) gives examples of modifications to examinations that may be necessary in order to comply with this section. These may include providing more time for completion of the examination or a change in the manner of giving the examination, e.g., reading the examination to the individual.

Paragraph (b)(3) requires the provision of auxiliary aids and services, unless the private entity offering the examination can demonstrate that offering a particular auxiliary aid would fundamentally alter the examination or result in an undue burden. Examples of auxiliary aids include taped examinations, interpreters or other effective methods of making aurally delivered materials available to individuals with hearing impairments, readers for individuals with visual impairments or learning disabilities, and other similar services and actions. The suggestion that individuals with learning disabilities may need readers is included, although it does not appear in the Department of Education regulation, because, in fact, some individuals with learning disabilities have visual perception problems and would benefit from a reader.

Many commenters pointed out the importance of ensuring that modifications provide the individual with a disability an equal opportunity to demonstrate his or her knowledge or ability. For example, a reader who is unskilled or lacks knowledge of specific terminology used in the examination may be unable to convey the information in the questions or to follow the applicant's instructions effectively. Commenters pointed out that, for persons with visual impairments who read Braille, Braille provides the closest functional equivalent to a printed test. The Department has, therefore, added Brailled examinations to the examples of auxiliary aids and services that may be required. For similar reasons, the Department also added to the list of examples of auxiliary aids and services large print examinations and answer sheets; "qualified" readers; and transcribers to write answers.

A commenter suggested that the phrase "fundamentally alter the examination" in this paragraph of the proposed rule be revised to more accurately reflect the function affected. In the final rule the Department has substituted the phrase "fundamentally alter the measurement of the skills or knowledge the examination is intended to test."

Paragraph (b)(4) gives examples of alternative accessible arrangements. For instance, the private entity might be required to provide the examination at an individual's home with a proctor. Alternative arrangements must provide conditions for individuals with disabilities that are comparable to the conditions under which other individuals take the examinations. In other words, an examination cannot be offered to an individual with a disability in a cold, poorly lit basement, if other individuals are given the examination in a warm, well lit classroom.

Some commenters who provide examinations for licensing or certification for particular occupations or professions urged that they be permitted to refuse to provide modifications or aids for persons seeking to take the examinations if those individuals, because of their disabilities, would be unable to perform the essential functions of the profession or occupation for which the examination is given, or unless the disability is reasonably determined in advance as not being an obstacle to certification. The Department has not changed its rule based on this comment. An examination is one stage of a licensing or certification process. An individual should not be barred from attempting

to pass that stage of the process merely because he or she might be unable to meet other requirements of the process. If the examination is not the first stage of the qualification process, an applicant may be required to complete the earlier stages prior to being admitted to the examination. On the other hand, the applicant may not be denied admission to the examination on the basis of doubts about his or her abilities to meet requirements that the examination is not designed to test.

Paragraph (c) sets forth specific requirements for courses. Paragraph (c)(1) contains the general rule that any course covered by this section must be modified to ensure that the place and manner in which the course is given is accessible. Paragraph (c)(2) gives examples of possible modifications that might be required, including extending the time permitted for completion of the course, permitting oral rather than written delivery of an assignment by a person with a visual impairment, or adapting the manner in which the course is conducted (i.e., providing cassettes of class handouts to an individual with a visual impairment). In response to comments, the Department has added to the examples in paragraph (c)(2) specific reference to distribution of course materials. If course materials are published and available from other sources, the entity offering the course may give advance notice of what materials will be used so as to allow an individual to obtain them in Braille or on tape but materials provided by the course offerer must be made available in alternative formats for individuals with disabilities.

In language similar to that of paragraph (b), paragraph (c)(3) requires auxiliary aids and services, unless a fundamental alteration or undue burden would result, and paragraph (c)(4) requires that courses be administered in accessible facilities. Paragraph (c)(5) gives examples of alternative accessible arrangements. These may include provision of the course through videotape, cassettes, or prepared notes. Alternative arrangements must provide comparable conditions to those provided to others, including similar lighting, room temperature, and the like. An entity offering a variety of courses, to fulfill continuing education requirements for a profession, for example, may not limit the selection or choice of courses available to individuals with disabilities.

Section 36.310 Transportation Provided by Public Accommodations

Section 36.310 contains specific provisions relating to public accommodations that provide transportation to their clients or customers. This section has been substantially revised in order to coordinate the requirements of this section with the requirements applicable to these transportation systems that will be contained in the regulations issued by the Secretary of Transportation pursuant to section 306 of the ADA, to be codified at 49 CFR part 37. The Department notes that, although the responsibility for issuing regulations applicable to transportation systems operated by public accommodations is divided between this Department and the Department of –Transportation, enforcement authority is assigned only to the Department of Justice.

The Department received relatively few comments on this section of the proposed rule. Most of the comments addressed issues that are not specifically addressed in this part, such as the standards for accessible vehicles and the procedure for determining whether equivalent service is provided. Those standards will be contained in the regulation issued by the Department of Transportation. Other commenters raised questions about the types of transportation that will be subject to this section. In response to these inquiries, the Department has revised the list of examples contained in the regulation.

Paragraph (a)(1) states the general rule that covered public accommodations are subject to all of the specific provisions of subparts B, C, and D, except as provided in §36.310. Examples of operations covered by the requirements are listed in paragraph (a)(2). The stated examples include hotel and motel airport shuttle services, customer shuttle bus services operated by private companies and shopping centers, student transportation, and shuttle operations of recreational facilities such as stadiums, zoos, amusement parks, and ski resorts. This brief list is not exhaustive. The section applies to any fixed route or demand responsive transportation system operated by a public accommodation for the benefit of its clients or customers. The section does not apply to transportation services provided only to employees. Employee transportation will be subject to the regulations issued by the Equal Employment Opportunity Commission to implement title I of the Act. However, if employees and customers or clients are served by the same transportation system, the provisions of this section will apply.

Paragraph (b) specifically provides that a public accommodation shall remove transportation barriers in existing vehicles to the extent that it is readily achievable to do so, but that the installation of hydraulic or other lifts is not required.

Paragraph (c) provides that public accommodations subject to this section shall comply with the requirements for transportation vehicles and systems contained in the regulations issued by the Secretary of Transportation.

Subpart D—New Construction and Alterations

Subpart D implements section 303 of the Act, which requires that newly constructed or altered places of public accommodation or commercial facilities be readily accessible to and usable by individuals with disabilities. This requirement contemplates a high degree of convenient access. It is intended to ensure that patrons and employees of places of public accommodation and employees of commercial facilities are able to get to, enter, and use the facility.

Potential patrons of places of public accommodation, such as retail establishments, should be able to get to a store, get into the store, and get to the areas where goods are being provided. Employees should have the same types of access, although those individuals require access to and around the employment area as well as to the area in which goods and services are provided.

The ADA is geared to the future—its goal being that, over time, access will be the rule, rather than the exception. Thus, the Act only requires modest expenditures, of the type addressed in §36.304 of this part, to provide access to existing facilities not otherwise being altered, but requires all new construction and alterations to be accessible.

The Act does not require new construction or alterations; it simply requires that, when a public accommodation or other private entity undertakes the construction or alteration of a facility subject to the Act, the newly constructed or altered facility must be made accessible. This subpart establishes the requirements for new construction and alterations.

As explained under the discussion of the definition of "facility," §36.104, pending development of specific requirements, the Department will not apply this subpart to places of public accommodation located in mobile units, boats, or other conveyances.

Section 36.401 New Construction

General

Section 36.401 implements the new construction requirements of the ADA. Section 303 (a)(1) of the Act provides that discrimination for purposes of section 302(a) of the Act includes a failure to design and construct facilities for first occupancy later than 30 months after the date of enactment (i.e., after January 26, 1993) that are readily accessible to and usable by individuals with disabilities.

Paragraph 36.401(a)(1) restates the general requirement for accessible new construction. The proposed rule stated that "any public accommodation or other private entity responsible for design and construction" must ensure that facilities conform to this requirement. Various commenters suggested that the proposed language was not consistent with the statute because it substituted "private entity responsible for design and construction" for the statutory language; because it did not address liability on the part of architects, contractors, developers, tenants, owners, and other entities; and because it limited the liability of entities responsible for commercial facilities. In response, the Department has revised this paragraph to repeat the language of section 303(a) of the ADA. The Department will interpret this section in a manner consistent with the intent of the statute and with the nature of the responsibilities of the various entities for design, for construction, or for both.

Designed and Constructed for First Occupancy

According to paragraph (a)(2), a facility is subject to the new construction requirements only if a completed application for a building permit or permit extension is filed after January 26, 1992, and the facility is occupied after January 26, 1993.

The proposed rule set forth for comment two alternative ways by which to determine what facilities are subject to the Act and what standards apply. Paragraph (a)(2) of the final rule is a slight variation on Option One in the proposed rule. The reasons for the Department's choice of Option One are discussed later in this section.

Paragraph (a)(2) acknowledges that Congress did not contemplate having actual occupancy be the sole trigger for the accessibility requirements, because the statute prohibits a failure to "design and construct for first occupancy," rather than requiring accessibility in facilities actually occupied after a particular date.

The commenters overwhelmingly agreed with the Department's proposal to use a date certain; many cited the reasons given in the preamble to the proposed rule. First, it is helpful for designers and builders to have a fixed date for accessible design, so that they can determine accessibility requirements early in the planning and design stage. It is difficult to determine accessibility requirements in anticipation of the actual date of first occupancy because of unpredictable and uncontrollable events (e.g., strikes affecting suppliers or labor, or natural disasters) that may delay occupancy. To redesign or reconstruct portions of a facility if it begins to appear that occupancy will be later than anticipated would be quite costly. A fixed date also assists those responsible for enforcing, or monitoring compliance with, the statute, and those protected by it.

The Department considered using as a trigger date for application of the accessibility standards the date on which a permit is granted. The Department chose instead the date on which a complete permit application is certified as received by the appropriate government entity. Almost all commenters

agreed with this choice of a trigger date. This decision is based partly on information that several months or even years can pass between application for a permit and receipt of a permit. Design is virtually complete at the time an application is complete (i.e., certified to contain all the information required by the State, county, or local government). After an application is filed, delays may occur before the permit is granted due to numerous factors (not necessarily relating to accessibility): for example, hazardous waste discovered on the property, flood plain requirements, zoning disputes, or opposition to the project from various groups. These factors should not require redesign for accessibility if the application was completed before January 26, 1992. However, if the facility must be redesigned for other reasons, such as a change in density or environmental preservation, and the final permit is based on a new application, the rule would require accessibility if that application was certified complete after January 26, 1992.

The certification of receipt of a complete application for a building permit is an appropriate point in the process because certifications are issued in writing by governmental authorities. In addition, this approach presents a clear and objective standard.

However, a few commenters pointed out that in some jurisdictions it is not possible to receive a "certification" that an application is complete, and suggested that in those cases the fixed date should be the date on which an application for a permit is received by the government agency. The Department has included such a provision in §36.401(a)(2)(i).

The date of January 26, 1992, is relevant only with respect to the last application for a permit or permit extension for a facility. Thus, if an entity has applied for only a "foundation" permit, the date of that permit application has no effect, because the entity must also apply for and receive a permit at a later date for the actual superstructure. In this case, it is the date of the later application that would control, unless construction is not completed within the time allowed by the permit, in which case a third permit would be issued and the date of the application for that permit would be determinative for purposes of the rule.

Choice of Option One for Defining "Designed and Constructed for First Occupancy"

Under the option the Department has chosen for determining applicability of the new construction standards, a building would be considered to be "for first occupancy" after January 26, 1993, only (1) if the last application for a building permit or permit extension for the facility is certified to be complete (or, in some jurisdictions, received) by a State, county, or local government after January 26, 1992, and (2) if the first certificate of occupancy is issued after January 26, 1993. The Department also asked for comment on an Option Two, which would have imposed new construction requirements if a completed application for a building permit or permit extension was filed after the enactment of the ADA (July 26, 1990), and the facility was occupied after January 26, 1993.

The request for comment on this issue drew a large number of comments expressing a wide range of views. Most business groups and some disability rights groups favored Option One, and some business groups and most disability rights groups favored Option Two. Individuals and government entities were equally divided; several commenters proposed other options.

Those favoring Option One pointed out that it is more reasonable in that it allows time for those subject to the new construction requirements to anticipate those requirements and to receive technical assistance pursuant to the Act. Numerous commenters said that time frames for designing and constructing some types of facilities (for example, health care facilities) can range from two to four years or more. They expressed concerns that Option Two, which would apply to some facilities already under design or construction as of the date the Act was signed, and to some on which construction began shortly after enactment, could result in costly redesign or reconstruction of those facilities. In the same vein, some Option One supporters found Option Two objectionable on due process grounds. In their view, Option Two would mean that in July 1991 (upon issuance of the final DOJ rule) the responsible entities would learn that ADA standards had been in effect since July 26, 1990, and this would amount to retroactive application of standards. Numerous commenters characterized Option Two as having no support in the statute and Option One as being more consistent with congressional intent.

Those who favored Option Two pointed out that it would include more facilities within the coverage of the new construction standards. They argued that because similar accessibility requirements are in effect under State laws, no hardship would be imposed by this option. Numerous commenters said that hardship would also be eliminated in light of their view that the ADA requires compliance with the Uniform Federal Accessibility Standards (UFAS) until issuance of DOJ standards. Those supporting Option Two claimed that it was more consistent with the statute and its legislative history.

The Department has chosen Option One rather than Option Two, primarily on the basis of the language of three relevant sections of the statute. First, section 303(a) requires compliance with accessibility standards set forth, or incorporated by reference

in, regulations to be issued by the Department of Justice. Standing alone, this section cannot be read to require compliance with the Department's standards before those standards are issued (through this rulemaking). Second, according to section 310 of the statute, section 303 becomes effective on January 26, 1992. Thus, section 303 cannot impose requirements on the design of buildings before that date. Third, while section 306(d) of the Act requires compliance with UFAS if final regulations have not been issued, that provision cannot reasonably be read to take effect until July 26, 1991, the date by which the Department of Justice must issue final regulations under title III.

Option Two was based on the premise that the interim standards in section 306(d) take effect as of the ADA's enactment (July 26, 1990), rather than on the date by which the Department of Justice regulations are due to be issued (July 26, 1991). The initial clause of section 306(d)(1) itself is silent on this question:

If final regulations have not been issued pursuant to this section, for new construction for which a * * * building permit is obtained prior to the issuance of final regulations * * * (interim standards apply).

The approach in Option Two relies partly on the language of section 310 of the Act, which provides that section 306, the interim standards provision, takes effect on the date of enactment. Under this interpretation the interim standards provision would prevail over the operative provision, section 303, which requires that new construction be accessible and which becomes effective January 26, 1992. This approach would also require construing the language of section 306(d)(1) to take effect before the Department's standards are due to be issued. The preferred reading of section 306 is that it would require that, if the Department's final standards had not been issued by July 26, 1991, UFAS would apply to certain buildings until such time as the Department's standards were issued.

General Substantive Requirements of the New Construction Provisions

The rule requires, as does the statute, that covered newly constructed facilities be readily accessible to and usable by individuals with disabilities. The phrase "readily accessible to and usable by individuals with disabilities" is a term that, in slightly varied formulations, has been used in the Architectural Barriers Act of 1968, the Fair Housing Act, the regulations implementing section 504 of the Rehabilitation Act of 1973, and current accessibility standards. It means, with respect to a facility or a portion of a facility, that it can be approached, entered, and used by individuals with disabilities (including mobility, sensory, and cognitive impairments) easily and conveniently. A facility that is constructed to meet the requirements of the rule's accessibility standards will be considered readily accessible and usable with respect to construction. To the extent that a particular type or element of a facility is not specifically addressed by the standards, the language of this section is the safest guide.

A private entity that renders an "accessible" building inaccessible in its operation, through policies or practices, may be in violation of section 302 of the Act. For example, a private entity can render an entrance to a facility inaccessible by keeping an accessible entrance open only during certain hours (whereas the facility is available to others for a greater length of time). A facility could similarly be rendered inaccessible if a person with disabilities is significantly limited in her or his choice of a range of accommodations.

Ensuring access to a newly constructed facility will include providing access to the facility from the street or parking lot, to the extent the responsible entity has control over the route from those locations. In some cases, the private entity will have no control over access at the point where streets, curbs, or sidewalks already exist, and in those instances the entity is encouraged to request modifications to a sidewalk, including installation of curb cuts, from a public entity responsible for them. However, as some commenters pointed out, there is no obligation for a private entity subject to title III of the ADA to seek or ensure compliance by a public entity with title II. Thus, although a locality may have an obligation under title II of the Act to install curb cuts at a particular location, that responsibility is separate from the private entity's title III obligation, and any involvement by a private entity in seeking cooperation from a public entity is purely voluntary in this context.

Work Areas

Proposed paragraph 36.401(b) addressed access to employment areas, rather than to the areas where goods or services are being provided. The preamble noted that the proposed paragraph provided guidance for new construction and alterations until more specific guidance was issued by the ATBCB and reflected in this Department's regulation. The entire paragraph has been deleted from this section in the final rule. The concepts of paragraphs (b) (1), (2), and (5) of the proposed rule are included, with modifications and expansion, in ADAAG. Paragraphs (3) and (4) of the proposed rule, concerning fixtures and equipment, are not included in the rule or in ADAAG.

Some commenters asserted that questions relating to new construction and alterations of work areas should be addressed by the EEOC under title I, as employment concerns. However, the legislative history of the statute clearly indicates that the new construction and alterations requirements of title III

were intended to ensure accessibility of new facilities to all individuals, including employees. The language of section 303 sweeps broadly in its application to all public accommodations and commercial facilities. EEOC's title I regulations will address accessibility requirements that come into play when "reasonable accommodation" to individual employees or applicants with disabilities is mandated under title I.

The issues dealt with in proposed §36.401(b)(1) and (2) are now addressed in ADAAG section 4.1.1(3). The Department's proposed paragraphs would have required that areas that will be used only by employees as work stations be constructed so that individuals with disabilities could approach, enter, and exit the areas. They would not have required that all individual work stations be constructed or equipped (for example, with shelves that are accessible or adaptable) to be accessible. This approach was based on the theory that, as long as an employee with disabilities could enter the building and get to and around the employment area, modifications in a particular work station could be instituted as a "reasonable accommodation" to that employee if the modifications were necessary and they did not constitute an undue hardship.

Almost all of the commenters agreed with the proposal to require access to a work area but not to require accessibility of each individual work station. This principle is included in ADAAG 4.1.1(3). Several of the comments related to the requirements of the proposed ADAAG and have been addressed in the accessibility standards.

Proposed paragraphs (b) (3) and (4) would have required that consideration be given to placing fixtures and equipment at accessible heights in the first instance, and to purchasing new equipment and fixtures that are adjustable. These paragraphs have not been included in the final rule because the rule in most instances does not establish accessibility standards for purchased equipment. (See discussion elsewhere in the preamble of proposed §36.309.) While the Department encourages entities to consider providing accessible or adjustable fixtures and equipment for employees, this rule does not require them to do so.

Paragraph (b)(5) of proposed §36.401 clarified that proposed paragraph (b) did not limit the requirement that employee areas other than individual work stations must be accessible. For example, areas that are employee "common use" areas and are not solely used as work stations (e.g., employee lounges, cafeterias, health units, exercise facilities) are treated no differently under this regulation than other parts of a building; they must be constructed or altered in compliance with the accessibility standards. This principle is not stated in §36.401 but is implicit in the requirements of this section and ADAAG.

Commercial Facilities in Private Residences

Section 36.401(b) of the final rule is a new provision relating to commercial facilities located in private residences. The proposed rule addressed these requirements in the preamble to §36.207, "Places of public accommodation located in private residences." The preamble stated that the approach for commercial facilities would be the same as that for places of public accommodation, i.e., those portions used exclusively as a commercial facility or used as both a commercial facility and for residential purposes would be covered. Because commercial facilities are only subject to new construction and alterations requirements, however, the covered portions would only be subject to subpart D. This approach is reflected in §36.401(b)(1).

The Department is aware that the statutory definition of "commercial facility" excludes private residences because they are "expressly exempted from coverage under the Fair Housing Act of 1968, as amended." However, the Department interprets that exemption as applying only to facilities that are exclusively residential. When a facility is used as both a residence and a commercial facility, the exemption does not apply.

Paragraph (b)(2) is similar to the new paragraph (b) under §36.207, "Places of public accommodation located in private residences." The paragraph clarifies that the covered portion includes not only the space used as a commercial facility, but also the elements used to enter the commercial facility, e.g., the homeowner's front sidewalk, if any; the doorway; the hallways; the restroom, if used by employees or visitors of the commercial facility; and any other portion of the residence, interior or exterior, used by employees or visitors of the commercial facility.

As in the case of public accommodations located in private residences, the new construction standards only apply to the extent that a portion of the residence is designed or intended for use as a commercial facility. Likewise, if a homeowner alters a portion of his home to convert it to a commercial facility, that work must be done in compliance with the alterations standards in appendix A.

Structural Impracticability

Proposed §36.401(c) is included in the final rule with minor changes. It details a statutory exception to the new construction requirement: the requirement that new construction be accessible does not apply where an entity can demonstrate that it is structurally impracticable to meet the requirements of the regulation. This provision is also included in ADAAG, at section 4.1.1(5)(a).

Consistent with the legislative history of the ADA, this narrow exception will apply only in rare and unusual circumstances where unique characteristics of terrain make accessibility unusually difficult. Such limitations for topographical problems are analogous to an acknowledged limitation in the application of the accessibility requirements of the Fair Housing Amendments Act (FHAA) of 1988.

Almost all commenters supported this interpretation. Two commenters argued that the DOJ requirement is too limiting and would not exempt some buildings that should be exempted because of soil conditions, terrain, and other unusual site conditions. These commenters suggested consistency with HUD's Fair Housing Accessibility Guidelines (56 FR 9472 (1991)), which generally would allow exceptions from accessibility requirements, or allow compliance with less stringent requirements, on sites with slopes exceeding 10%.

The Department is aware of the provisions in HUD's guidelines, which were issued on March 6, 1991, after passage of the ADA and publication of the Department's proposed rule. The approach taken in these guidelines, which apply to different types of construction and implement different statutory requirements for new construction, does not bind this Department in regulating under the ADA. The Department has included in the final rule the substance of the proposed provision, which is faithful to the intent of the statute, as expressed in the legislative history. (See Senate report at 70–71; Education and Labor report at 120.)

The limited structural impracticability exception means that it is acceptable to deviate from accessibility requirements only where unique characteristics of terrain prevent the incorporation of accessibility features and where providing accessibility would destroy the physical integrity of a facility. A situation in which a building must be built on stilts because of its location in marshlands or over water is an example of one of the few situations in which the exception for structural impracticability would apply.

This exception to accessibility requirements should not be applied to situations in which a facility is located in "hilly" terrain or on a plot of land upon which there are steep grades. In such circumstances, accessibility can be achieved without destroying the physical integrity of a structure, and is required in the construction of new facilities.

Some commenters asked for clarification concerning when and how to apply the ADA rules or the Fair Housing Accessibility Guidelines, especially when a facility may be subject to both because of mixed use. Guidance on this question is provided in the discussion of the definitions of place of public accommodation and commercial facility. With respect to the structural impracticability exception, a mixed-use facility could not take advantage of the Fair Housing exemption, to the extent that it is less stringent than the ADA exemption, except for those portions of the facility that are subject only to the Fair Housing Act.

As explained in the preamble to the proposed rule, in those rare circumstances in which it is structurally impracticable to achieve full compliance with accessibility retirements under the ADA, places of public accommodation and commercial facilities should still be designed and constructed to incorporate accessibility features to the extent that the features are structurally practicable. The accessibility requirements should not be viewed as an all-or-nothing proposition in such circumstances.

If it is structurally impracticable for a facility in its entirety to be readily accessible to and usable by people with disabilities, then those portions that can be made accessible should be made accessible. If a building cannot be constructed in compliance with the full range of accessibility requirements because of structural impracticability, then it should still incorporate those features that are structurally practicable. If it is structurally impracticable to make a particular facility accessible to persons who have particular types of disabilities, it is still appropriate to require it to be made accessible to persons with other types of disabilities. For example, a facility that is of necessity built on stilts and cannot be made accessible to persons who use wheelchairs because it is structurally impracticable to do so, must be made accessible for individuals with vision or hearing impairments or other kinds of disabilities.

Elevator Exemption

Section 36.401(d) implements the "elevator exemption" for new construction in section 303(b) of the ADA. The elevator exemption is an exception to the general requirement that new facilities be readily accessible to and usable by individuals with disabilities. Generally, an elevator is the most common way to provide individuals who use wheelchairs "ready access" to floor levels above or below the ground floor of a multi-story building. Congress, however, chose not to require elevators in new small buildings, that is, those with less than three stories or less than 3,000 square feet per story. In buildings eligible for the exemption, therefore, "ready access" from the building entrance to a floor above or below the ground floor is not required, because the statute does not require that an elevator be installed in such buildings. The elevator exemption does not apply, however, to a facility housing a shopping center, a shopping mall, or the professional office of a

health care provider, or other categories of facilities as determined by the Attorney General. For example, a new office building that will have only two stories, with no elevator planned, will not be required to have an elevator, even if each story has 20,000 square feet. In other words, having either less than 3000 square feet per story or less than three stories qualifies a facility for the exemption; it need not qualify for the exemption on both counts. Similarly, a facility that has five stories of 2800 square feet each qualifies for the exemption. If a facility has three or more stories at any point, it is not eligible for the elevator exemption unless all the stories are less than 3000 square feet.

The terms "shopping center or shopping mall" and "professional office of a health care provider" are defined in this section. They are substantively identical to the definitions included in the proposed rule in §36.104, "Definitions." They have been moved to this section because, as commenters pointed out, they are relevant only for the purposes of the elevator exemption, and inclusion in the general definitions section could give the incorrect impression that an office of a health care provider is not covered as a place of public accommodation under other sections of the rule, unless the office falls within the definition.

For purposes of §36.401, a "shopping center or shopping mall" is (1) a building housing five or more sales or rental establishments, or (2) a series of buildings on a common site, either under common ownership or common control or developed either as one project or as a series of related projects, housing five or more sales or rental establishments. The term "shopping center or shopping mall" only includes floor levels containing at least one sales or rental establishment, or any floor level that was designed or intended for use by at least one sales or rental establishment.

Any sales or rental establishment of the type that is included in paragraph (5) of the definition of "place of public accommodation" (for example, a bakery, grocery store, clothing store, or hardware store) is considered a sales or rental establishment for purposes of this definition; the other types of public accommodations (e.g., restaurants, laundromats, banks, travel services, health spas) are not.

In the preamble to the proposed rule, the Department sought comment on whether the definition of "shopping center or mall" should be expanded to include any of these other types of public accommodations. The Department also sought comment on whether a series of buildings should fall within the definition only if they are physically connected.

Most of those responding to the first question (overwhelmingly groups representing people with disabilities, or individual commenters) urged that the definition encompass more places of public accommodation, such as restaurants, motion picture houses, laundromats, dry cleaners, and banks. They pointed out that often it is not known what types of establishments will be tenants in a new facility. In addition, they noted that malls are advertised as entities, that their appeal is in the "package" of services offered to the public, and that this package often includes the additional types of establishments mentioned.

Commenters representing business groups sought to exempt banks, travel services, grocery stores, drug stores, and freestanding retail stores from the elevator requirement. They based this request on the desire to continue the practice in some locations of incorporating mezzanines housing administrative offices, raised pharmacist areas, and raised areas in the front of supermarkets that house safes and are used by managers to oversee operations of check-out aisles and other functions. Many of these concerns are adequately addressed by ADAAG. Apart from those addressed by ADAAG, the Department sees no reason to treat a particular type of sales or rental establishment differently from any other. Although banks and travel services are not included as "sales or rental establishments," because they do not fall under paragraph (5) of the definition of place of public accommodation, grocery stores and drug stores are included.

The Department has declined to include places of public accommodation other than sales or rental establishments in the definition. The statutory definition of "public accommodation" (section 301(7)) lists 12 types of establishments that are considered public accommodations. Category (E) includes "a bakery, grocery store, clothing store, hardware store, shopping center, or other sales or rental establishment." This arrangement suggests that it is only these types of establishments that would make up a shopping center for purposes of the statute. To include all types of places of public accommodation, or those from 6 or 7 of the categories, as commenters suggest, would overly limit the elevator exemption; the universe of facilities covered by the definition of "shopping center" could well exceed the number of multitenant facilities *not* covered, which would render the exemption almost meaningless.

For similar reasons, the Department is retaining the requirement that a building or series of buildings must house five or more sales or rental establishments before it falls within the definition of "shopping center." Numerous commenters objected to the number and requested that the number be lowered from five to three or four. Lowering the number in this manner would include an inordinately large number of two-story multitenant buildings within the category of those required to have elevators.

The responses to the question concerning whether a series of buildings should be connected in order to be covered were varied. Generally, disability rights groups and some government agencies said a series of buildings should not have to be connected, and pointed to a trend in some areas to build shopping centers in a garden or village setting. The Department agrees that this design choice should not negate the elevator requirement for new construction. Some business groups answered the question in the affirmative, and some suggested a different definition of shopping center. For example, one commenter recommended the addition of a requirement that the five or more establishments be physically connected on the non-ground floors by a common pedestrian walkway or pathway, because otherwise a series of stand-alone facilities would have to comply with the elevator requirement, which would be unduly burdensome and perhaps infeasible. Another suggested use of what it characterized as the standard industry definition: "A group of retail stores and related business facilities, the whole planned, developed, operated and managed as a unit." While the rule's definition would reach a series of related projects that are under common control but were not developed as a single project, the Department considers such a facility to be a shopping center within the meaning of the statute. However, in light of the hardship that could confront a series of existing small stand-alone buildings if elevators were required in alterations, the Department has included a common access route in the definition of shopping center or shopping mall for purposes of § 36.404.

Some commenters suggested that access to restrooms and other shared facilities open to the public should be required even if those facilities were not on a shopping floor. Such a provision with respect to toilet or bathing facilities is included in the elevator exception in final ADAAG 4.1.3(5).

For purposes of this subpart, the rule does not distinguish between a "shopping mall" (usually a building with a roofed-over common pedestrian area serving more than one tenant in which a majority of the tenants have a main entrance from the common pedestrian area) and a "shopping center" (e.g., a "shopping strip"). Any facility housing five or more of the types of sales or rental establishments described, regardless of the number of other types of places of public accommodation housed there (e.g., offices, movie theatres, restaurants), is a shopping center or shopping mall.

For example, a two-story facility built for mixed-use occupancy on both floors (e.g., by sales and rental establishments, a movie theater, restaurants, and general office space) is a shopping center or shopping mall if it houses five or more sales or rental establishments. If none of these establishments is located on the second floor, then only the ground floor, which contains the sales or rental establishments, would be a "shopping center or shopping mall," unless the second floor was designed or intended for use by at least one sales or rental establishment. In determining whether a floor was intended for such use, factors to be considered include the types of establishments that first occupied the floor, the nature of the developer's marketing strategy, i.e., what types of establishments were sought, and inclusion of any design features particular to rental and sales establishments.

A "professional office of a health care provider" is defined as a location where a person or entity regulated by a State to provide professional services related to the physical or mental health of an individual makes such services available to the public. In a two-story development that houses health care providers only on the ground floor, the "professional office of a health care provider" is limited to the ground floor unless the second floor was designed or intended for use by a health care provider. In determining if a floor was intended for such use, factors to be considered include whether the facility was constructed with special plumbing, electrical, or other features needed by health care providers, whether the developer marketed the facility as a medical office center, and whether any of the establishments that first occupied the floor was, in fact, a health care provider.

In addition to requiring that a building that is a shopping center, shopping mall, or the professional office of a health care provider have an elevator regardless of square footage or number of floors, the ADA (section 303(b)) provides that the Attorney General may determine that a particular category of facilities requires the installation of elevators based on the usage of the facilities. The Department, as it proposed to do, has added to the nonexempt categories terminals, depots, or other stations used for specified public transportation, and airport passenger terminals. Numerous commenters in all categories endorsed this proposal; none opposed it. It is not uncommon for an airport passenger terminal or train station, for example, to have only two floors, with gates on both floors. Because of the significance of transportation, because a person with disabilities could be arriving or departing at any gate, and because inaccessible facilities could result in a total denial of transportation services, it is reasonable to require that newly constructed transit facilities be accessible, regardless of square footage or number of floors. One comment suggested an amendment that would treat terminals and stations similarly to shopping centers, by requiring an accessible route only to those

areas used for passenger loading and unloading and for other passenger services. Paragraph (d)(2)(ii) has been modified accordingly.

Some commenters suggested that other types of facilities (e.g., educational facilities, libraries, museums, commercial facilities, and social service facilities) should be included in the category of nonexempt facilities. The Department has not found adequate justification for including any other types of facilities in the nonexempt category at this time.

Section 36.401(d)(2) establishes the operative requirements concerning the elevator exemption and its application to shopping centers and malls, professional offices of health care providers, transit stations, and airport passenger terminals. Under the rule's framework, it is necessary first to determine if a new facility (including one or more buildings) houses places of public accommodation or commercial facilities that are in the categories for which elevators are required. If so, and the facility is a shopping center or shopping mall, or a professional office of a health care provider, then any area housing such an office or a sales or rental establishment or the professional office of a health care provider is not entitled to the elevator exemption.

The following examples illustrate the application of these principles:

1. A shopping mall has an upper and a lower level. There are two "anchor stores" (in this case, major department stores at either end of the mall, both with exterior entrances and an entrance on each level from the common area). In addition, there are 30 stores (sales or rental establishments) on the upper level, all of which have entrances from a common central area. There are 30 stores on the lower level, all of which have entrances from a common central area. According to the rule, elevator access must be provided to each store and to each level of the anchor stores. This requirement could be satisfied with respect to the 60 stores through elevators connecting the two pedestrian levels, provided that an individual could travel from the elevator to any other point on that level (i.e., into any store through a common pedestrian area) on an accessible path.

2. A commercial (nonresidential) "townhouse" development is composed of 20 two-story attached buildings. The facility is developed as one project, with common ownership, and the space will be leased to retailers. Each building has one accessible entrance from a pedestrian walk to the first floor. From that point, one can enter a store on the first floor, or walk up a flight of stairs to a store on the second floor. All 40 stores must be accessible at ground floor level or by accessible vertical access from that level. This does not mean, however, that 20 elevators must be installed. Access could be provided to the second floor by an elevator from the pedestrian area on the lower level to an upper walkway connecting all the areas on the second floor.

3. In the same type of development, it is planned that retail stores will be housed exclusively on the ground floor, with only office space (not professional offices of health care providers) on the second. Elevator access need not be provided to the second floor because all the sales or rental establishments (the entities that make the facility a shopping center) are located on an accessible ground floor.

4. In the same type of development, the space is designed and marketed as medical or office suites, or as a medical office facility. Accessible vertical access must be provided to all areas, as described in example 2.

Some commenters suggested that building owners who knowingly lease or rent space to nonexempt places of public accommodation would violate §36.401. However, the Department does not consider leasing or renting inaccessible space in itself to constitute a violation of this part. Nor does a change in use of a facility, with no accompanying alterations (e.g., if a psychiatrist replaces an attorney as a tenant in a second-floor office, but no alterations are made to the office) trigger accessibility requirements.

Entities cannot evade the requirements of this section by constructing facilities in such a way that no story is intended to constitute a "ground floor." For example, if a private entity constructs a building whose main entrance leads only to stairways or escalators that connect with upper or lower floors, the Department would consider at least one level of the facility a ground story.

The rule requires in §36.401(d)(3), consistent with the proposed rule, that, even if a building falls within the elevator exemption, the floor or floors other than the ground floor must nonetheless be accessible, except for elevator access, to individuals with disabilities, including people who use wheelchairs. This requirement applies to buildings that do not house sales or rental establishments or the professional offices of a health care provider as well as to those in which such establishments or offices are all located on the ground floor. In such a situation, little added cost is entailed in making the second floor accessible, because it is similar in structure and floor plan to the ground floor.

There are several reasons for this provision. First, some individuals who are mobility impaired may work on a building's second floor, which they can reach by stairs and the use of crutches; however, the same individuals, once they reach the second floor, may then use a wheelchair that is kept in the office. Secondly, because the first floor will be accessible, there will be little additional cost entailed in making the second

floor, with the same structure and generally the same floor plan, accessible. In addition, the second floor must be accessible to those persons with disabilities who do not need elevators for level changes (for example, persons with sight or hearing impairments and those with certain mobility impairments). Finally, if an elevator is installed in the future for any reason, full access to the floor will be facilitated.

One commenter asserted that this provision goes beyond the Department's authority under the Act, and disagreed with the Department's claim that little additional cost would be entailed in compliance. However, the provision is taken directly from the legislative history (see Education and Labor report at 114).

One commenter said that where an elevator is not required, platform lifts should be required. Two commenters pointed out that the elevator exemption is really an exemption from the requirement for providing an accessible route to a second floor not served by an elevator. The Department agrees with the latter comment. Lifts to provide access between floors are not required in buildings that are not required to have elevators. This point is specifically addressed in the appendix to ADAAG (§4.1.3(5)). ADAAG also addresses in detail the situations in which lifts are permitted or required.

Section 36.402 Alterations

Sections 36.402–36.405 implement section 303(a)(2) of the Act, which requires that alterations to existing facilities be made in a way that ensures that the altered portion is readily accessible to and usable by individuals with disabilities. This part does not require alterations; it simply provides that when alterations are undertaken, they must be made in a manner that provides access.

Section 36.402(a)(1) provides that any alteration to a place of public accommodation or a commercial facility, after January 26, 1992, shall be made so as to ensure that, to the maximum extent feasible, the altered portions of the facility are readily accessible to and usable by individuals with disabilities, including individuals who use wheelchairs.

The proposed rule provided that an alteration would be deemed to be undertaken after January 26, 1992, if the physical alteration of the property is in progress after that date. Commenters pointed out that this provision would, in some cases, produce an unjust result by requiring the redesign or retrofitting of projects initiated before this part established the ADA accessibility standards. The Department agrees that the proposed rule would, in some instances, unfairly penalize projects that were substantially completed before the effective date. Therefore, paragraph (a)(2) has been revised to specify that an alteration will be deemed to be undertaken after January 26, 1992, if the physical alteration of the property begins after that date. As a matter of interpretation, the Department will construe this provision to apply to alterations that require a permit from a State, County or local government, if physical alterations pursuant to the terms of the permit begin after January 26, 1992. The Department recognizes that this application of the effective date may require redesign of some facilities that were planned prior to the publication of this part, but no retrofitting will be required of facilities on which the physical alterations were initiated prior to the effective date of the Act. Of course, nothing in this section in any way alters the obligation of any facility to remove architectural barriers in existing facilities to the extent that such barrier removal is readily achievable.

Paragraph (b) provides that, for the purposes of this part, an "alteration" is a change to a place of public accommodation or a commercial facility that affects or could affect the usability of the building or facility or any part thereof. One commenter suggested that the concept of usability should apply only to those changes that affect access by persons with disabilities. The Department remains convinced that the Act requires the concept of "usability" to be read broadly to include any change that affects the usability of the facility, not simply changes that relate directly to access by individuals with disabilities.

The Department received a significant number of comments on the examples provided in paragraphs (b)(1) and (b)(2) of the proposed rule. Some commenters urged the Department to limit the application of this provision to major structural modifications, while others asserted that it should be expanded to include cosmetic changes such as painting and wallpapering. The Department believes that neither approach is consistent with the legislative history, which requires this Department's regulation to be consistent with the accessibility guidelines (ADAAG) developed by the Architectural and Transportation Barriers Compliance Board (ATBCB). Although the legislative history contemplates that, in some instances, the ADA accessibility standards will exceed the current MGRAD requirements, it also clearly indicates the view of the drafters that "minor changes such as painting or papering walls * * * do not affect usability" (Education and Labor report at 111, Judiciary report at 64), and, therefore, are not alterations. The proposed rule was based on the existing MGRAD definition of "alteration." The language of the final rule has been revised to be consistent with ADAAG, incorporated as appendix A to this part.

Some commenters sought clarification of the intended scope of this section. The proposed rule contained illustrations of changes that affect usability and those that do not.

The intent of the illustrations was to explain the scope of the alterations requirement; the effect was to obscure it. As a result of the illustrations, some commenters concluded that any alteration to a facility, even a minor alteration such as relocating an electrical outlet, would trigger an extensive obligation to provide access throughout an entire facility. That result was never contemplated.

Therefore, in this final rule paragraph (b)(1) has been revised to include the major provisions of paragraphs (b)(1) and (b)(2) of the proposed rule. The examples in the proposed rule have been deleted. Paragraph (b)(1) now provides that alterations include, but are not limited to, remodeling, renovation, rehabilitation, reconstruction, historic restoration, changes or rearrangement in structural parts or elements, and changes or rearrangement in the plan configuration of walls and full-height partitions. Normal maintenance, reroofing, painting or wallpapering, asbestos removal, or changes to mechanical and electrical systems are not alterations unless they affect the usability of building or facility.

Paragraph (b)(2) of this final rule was added to clarify the scope of the alterations requirement. Paragraph (b)(2) provides that if existing elements, spaces, or common areas are altered, then each such altered element, space, or area shall comply with the applicable provisions of appendix A (ADAAG). As provided in §36.403, if an altered space or area is an area of the facility that contains a primary function, then the requirements of that section apply.

Therefore, when an entity undertakes a minor alteration to a place of public accommodation or commercial facility, such as moving an electrical outlet, the new outlet must be installed in compliance with ADAAG. (Alteration of the elements listed in §36.403(c)(2) cannot trigger a path of travel obligation.) If the alteration is to an area, such as an employee lounge or locker room, that is not an area of the facility that contains a primary function, that area must comply with ADAAG. It is only when an alteration affects access to or usability of an area containing a primary function, as opposed to other areas or the elements listed in §36.403(c)(2), that the path of travel to the altered area must be made accessible.

The Department received relatively few comments on paragraph (c), which explains the statutory phrase "to the maximum extent feasible." Some commenters suggested that the regulation should specify that cost is a factor in determining whether it is feasible to make an altered area accessible. The legislative history of the ADA indicates that the concept of feasibility only reaches the question of whether it is possible to make the alteration accessible in compliance with this part. Costs are to be considered only when an alteration to an area containing a primary function triggers an additional requirement to make the path of travel to the altered area accessible.

Section 36.402(c) is, therefore, essentially unchanged from the proposed rule. At the recommendation of a commenter, the Department has inserted the word "virtually" to modify "impossible" to conform to the language of the legislative history. It explains that the phrase "to the maximum extent feasible" as used in this section applies to the occasional case where the nature of an existing facility makes it virtually impossible to comply fully with applicable accessibility standards through a planned alteration. In the occasional cases in which full compliance is impossible, alterations shall provide the maximum physical accessibility feasible. Any features of the facility that are being altered shall be made accessible unless it is technically infeasible to do so. If providing accessibility in conformance with this section to individuals with certain disabilities (e.g., those who use wheelchairs) would not be feasible, the facility shall be made accessible to persons with other types of disabilities (e.g., those who use crutches or who have impaired vision or hearing, or those who have other types of impairments).

Section 36.403 Alterations: Path of Travel

Section 36.403 implements the statutory requirement that any alteration that affects or could affect the usability of or access to an area of a facility that contains a primary function shall be made so as to ensure that, to the maximum extent feasible, the path of travel to the altered area, and the restrooms, telephones, and drinking fountains serving the altered area, are readily accessible to and usable by individuals with disabilities, including individuals who use wheelchairs, unless the cost and scope of such alterations is disproportionate to the cost of the overall alteration. Paragraph (a) restates this statutory requirement.

Paragraph (b) defines a "primary function" as a major activity for which the facility is intended. This paragraph is unchanged from the proposed rule. Areas that contain a primary function include, but are not limited to, the customer services lobby of a bank, the dining area of a cafeteria, the meeting rooms in a conference center, as well as offices and all other work areas in which the activities of the public accommodation or other private entities using the facility are carried out. The concept of "areas containing a primary function" is analogous to the concept of "functional spaces" in §3.5 of the existing Uniform Federal Accessibility Standards, which defines "functional spaces" as "[t]he rooms and spaces in a building or facility that house the major activities for which the building or facility is intended."

Paragraph (b) provides that areas such as mechanical rooms, boiler rooms, supply storage rooms, employee lounges and locker rooms, janitorial closets, entrances, corridors, and restrooms are not areas containing a primary function. There may be exceptions to this general rule. For example, the availability of public restrooms at a place of public accommodation at a roadside rest stop may be a major factor affecting customers' decisions to patronize the public accommodation. In that case, a restroom would be considered to be an "area containing a primary function" of the facility.

Most of the commenters who addressed this issue supported the approach taken by the Department; but a few commenters suggested that areas not open to the general public or those used exclusively by employees should be excluded from the definition of primary function. The preamble to the proposed rule noted that the Department considered an alternative approach to the definition of "primary function," under which a primary function of a commercial facility would be defined as a major activity for which the facility was intended, while a primary function of a place of public accommodation would be defined as an activity which involves providing significant goods, services, facilities, privileges, advantages, or accommodations. However, the Department concluded that, although portions of the legislative history of the ADA support this alternative, the better view is that the language now contained in §36.403(b) most accurately reflects congressional intent. No commenter made a persuasive argument that the Department's interpretation of the legislative history is incorrect.

When the ADA was introduced, the requirement to make alterations accessible was included in section 302 of the Act, which identifies the practices that constitute discrimination by a public accommodation. Because section 302 applies only to the operation of a place of public accommodation, the alterations requirement was intended only to provide access to clients and customers of a public accommodation. It was anticipated that access would be provided to employees with disabilities under the "reasonable accommodation" requirements of title I. However, during its consideration of the ADA, the House Judiciary Committee amended the bill to move the alterations provision from section 302 to section 303, which applies to commercial facilities as well as public accommodations. The Committee report accompanying the bill explains that:

New construction and alterations of both public accommodations and commercial facilities must be made readily accessible to and usable by individuals with disabilities * * *. Essentially, [this requirement] is designed to ensure that patrons *and employees* of public accommodations and commercial facilities are able to get to, enter and use the facility * * *. The rationale for making new construction accessible applies with equal force to alterations.

Judiciary report at 62–63 (emphasis added).

The ADA, as enacted, contains the language of section 303 as it was reported out of the Judiciary Committee. Therefore, the Department has concluded that the concept of "primary function" should be applied in the same manner to places of public accommodation and to commercial facilities, thereby including employee work areas in places of public accommodation within the scope of this section.

Paragraph (c) provides examples of alterations that affect the usability of or access to an area containing a primary function. The examples include: Remodeling a merchandise display area or employee work areas in a department store; installing a new floor surface to replace an inaccessible surface in the customer service area or employee work areas of a bank; redesigning the assembly line area of a factory; and installing a computer center in an accounting firm. This list is illustrative, not exhaustive. Any change that affects the usability of or access to an area containing a primary function triggers the statutory obligation to make the path of travel to the altered area accessible.

When the proposed rule was drafted, the Department believed that the rule made it clear that the ADA would require alterations to the path of travel only when such alterations are not disproportionate to the alteration to the primary function area. However, the comments that the Department received indicated that many commenters believe that even minor alterations to individual elements would require additional alterations to the path of travel. To address the concern of these commenters, a new paragraph (c)(2) has been added to the final rule to provide that alterations to such elements as windows, hardware, controls (e.g. light switches or thermostats), electrical outlets, or signage will not be deemed to be alterations that affect the usability of or access to an area containing a primary function. Of course, each element that is altered must comply with ADAAG (appendix A) . The cost of alterations to individual elements would be included in the overall cost of an alteration for purposes of determining disproportionality and would be counted when determining the aggregate cost of a series of small alterations in accordance with §36.401(h) if the area is altered in a manner that affects access to or usability of an area containing a primary function.

Paragraph (d) concerns the respective obligations of landlords and tenants in the cases of alterations that trigger the path of travel requirement under §36.403. This paragraph

was contained in the landlord/tenant section of the proposed rule, §36.201(b). If a tenant is making alterations upon its premises pursuant to terms of a lease that grant it the authority to do so (even if they constitute alterations that trigger the path of travel requirement), and the landlord is not making alterations to other parts of the facility, then the alterations by the tenant on its own premises do not trigger a path of travel obligation upon the landlord in areas of the facility under the landlord's authority that are not otherwise being altered. The legislative history makes clear that the path of travel requirement applies only to the entity that is already making the alteration, and thus the Department has not changed the final rule despite numerous comments suggesting that the tenant be required to provide a path of travel.

Paragraph (e) defines a "path of travel" as a continuous, unobstructed way of pedestrian passage by means of which an altered area may be approached, entered, and exited; and which connects the altered area with an exterior approach (including sidewalks, streets, and parking areas), an entrance to the facility, and other parts of the facility. This concept of an accessible path of travel is analogous to the concepts of "accessible route" and "circulation path" contained in section 3.5 of the current UFAS. Some commenters suggested that this paragraph should address emergency egress. The Department disagrees. "Path of travel" as it is used in this section is a term of art under the ADA that relates only to the obligation of the public accommodation or commercial facility to provide additional accessible elements when an area containing a primary function is altered. The Department recognizes that emergency egress is an important issue, but believes that it is appropriately addressed in ADAAG (appendix A), not in this paragraph. Furthermore, ADAAG does not require changes to emergency egress areas in alterations.

Paragraph (e)(2) is drawn from section 3.5 of UFAS. It provides that an accessible path of travel may consist of walks and sidewalks, curb ramps and other interior or exterior pedestrian ramps; clear floor paths through lobbies, corridors, rooms, and other improved areas; parking access aisles; elevators and lifts; or a combination of such elements. Paragraph (e)(3) provides that, for the purposes of this part, the term "path of travel" also includes the restrooms, telephones, and drinking fountains serving an altered area.

Although the Act establishes an expectation that an accessible path of travel should generally be included when alterations are made to an area containing a primary function, Congress recognized that, in some circumstances, providing an accessible path of travel to an altered area may be sufficiently burdensome in comparison to the alteration being undertaken to the area containing a primary function as to render this requirement unreasonable. Therefore, Congress provided, in section 303(a)(2) of the Act, that alterations to the path of travel that are disproportionate in cost and scope to the overall alteration are not required.

The Act requires the Attorney General to determine at what point the cost of providing an accessible path of travel becomes disproportionate. The proposed rule provided three options for making this determination.

Two committees of Congress specifically addressed this issue: the House Committee on Education and Labor and the House Committee on the Judiciary. The reports issued by each committee suggested that accessibility alterations to a path of travel might be "disproportionate" if they exceed 30% of the alteration costs (Education and Labor report at 113; Judiciary report at 64). Because the Department believed that smaller percentage rates might be appropriate, the proposed rule sought comments on three options: 10%, 20%, or 30%.

The Department received a significant number of comments on this section. Commenters representing individuals with disabilities generally supported the use of 30% (or more); commenters representing covered entities supported a figure of 10% (or less). The Department believes that alterations made to provide an accessible path of travel to the altered area should be deemed disproportionate to the overall alteration when the cost exceeds 20% of the cost of the alteration to the primary function area. This approach appropriately reflects the intent of Congress to provide access for individuals with disabilities without causing economic hardship for the covered public accommodations and commercial facilities.

The Department has determined that the basis for this cost calculation shall be the cost of the alterations to the area containing the primary function. This approach will enable the public accommodation or other private entity that is making the alteration to calculate its obligation as a percentage of a clearly ascertainable base cost, rather than as a percentage of the "total" cost, an amount that will change as accessibility alterations to the path of travel are made.

Paragraph (f)(2) (paragraph (e)(2) in the proposed rule) is unchanged. It provides examples of costs that may be counted as expenditures required to provide an accessible path of travel. They include:

- Costs associated with providing an accessible entrance and an accessible route to the altered area, for example, the cost of widening doorways or installing ramps;
- Costs associated with making restrooms accessible, such as installing grab bars, enlarging toilet stalls, insulating pipes, or installing accessible faucet controls;

• Costs associated with providing accessible telephones, such as relocating telephones to an accessible height, installing amplification devices, or installing telecommunications devices for deaf persons (TDD's);

• Costs associated with relocating an inaccessible drinking fountain.

Paragraph (f)(1) of the proposed rule provided that when the cost of alterations necessary to make the path of travel serving an altered area fully accessible is disproportionate to the cost of the overall alteration, the path of travel shall be made accessible to the maximum extent feasible. In response to the suggestion of a commenter, the Department has made an editorial change in the final rule (paragraph (g)(1)) to clarify that if the cost of providing a fully accessible path of travel is disproportionate, the path of travel shall be made accessible "to the extent that it can be made accessible without incurring disproportionate costs."

Paragraph (g)(2) (paragraph (f)(2) in the NPRM) establishes that priority should be given to those elements that will provide the greatest access, in the following order: An accessible entrance; an accessible route to the altered area; at least one accessible restroom for each sex or a single unisex restroom; accessible telephones; accessible drinking fountains; and, whenever possible, additional accessible elements such as parking, storage, and alarms. This paragraph is unchanged from the proposed rule.

Paragraph (h) (paragraph (g) in the proposed rule) provides that the obligation to provide an accessible path of travel may not be evaded by performing a series of small alterations to the area served by a single path of travel if those alterations could have been performed as a single undertaking. If an area containing a primary function has been altered without providing an accessible path of travel to serve that area, and subsequent alterations of that area, or a different area on the same path of travel, are undertaken within three years of the original alteration, the total cost of alterations to primary function areas on that path of travel during the preceding three year period shall be considered in determining whether the cost of making the path of travel serving that area accessible is disproportionate. Only alterations undertaken after January 26, 1992, shall be considered in determining if the cost of providing accessible features is disproportionate to the overall cost of the alterations.

Section 36.404 Alterations: Elevator Exemption

Section 36.404 implements the elevator exemption in section 303(b) of the Act as it applies to altered facilities. The provisions of section 303(b) are discussed in the preamble to §36.401(d) above. The statute applies the same exemption to both new construction and alterations. The principal difference between the requirements of §36.401(d) and §36.404 is that, in altering an existing facility that is not eligible for the statutory exemption, the public accommodation or other private entity responsible for the alteration is not required to install an elevator if the installation of an elevator would be disproportionate in cost and scope to the cost of the overall alteration as provided in §36.403(f)(1). In addition, the standards referenced in §36.406 (ADAAG) provide that installation of an elevator in an altered facility is not required if it is "technically infeasible."

This section has been revised to define the terms "professional office of a health care provider" and "shopping center or shopping mall" for the purposes of this section. The definition of "professional office of a health care provider" is identical to the definition included in §36.401(d).

It has been brought to the attention of the Department that there is some misunderstanding about the scope of the elevator exemption as it applies to the professional office of a health care provider. A public accommodation, such as the professional office of a health care provider, is required to remove architectural barriers to its facility to the extent that such barrier removal is readily achievable (see §36.304), but it is not otherwise required by this part to undertake new construction or alterations. This part does not require that an existing two story building that houses the professional office of a health care provider be altered for the purpose of providing elevator access. If, however, alterations to the area housing the office of the health care provider are undertaken for other purposes, the installation of an elevator might be required, but only if the cost of the elevator is not disproportionate to the cost of the overall alteration. Neither the Act nor this part prohibits a health care provider from locating his or her professional office in an existing facility that does not have an elevator.

Because of the unique challenges presented in altering existing facilities, the Department has adopted a definition of "shopping center or shopping mall" for the purposes of this section that is slightly different from the definition adopted under §36.401(d). For the purposes of this section, a "shopping center or shopping mall" is (1) a building housing five or more sales or rental establishments, or (2) a series of buildings on a common site, connected by a common pedestrian access route above or below the ground floor, either under common ownership or common control or developed either as one project or as a series of related projects, housing five or more sales or rental establishments. As is the case with new construction, the term "shopping center or shopping mall" only includes floor levels housing at least one sales or rental establishment, or any floor level

that was designed or intended for use by at least one sales or rental establishment.

The Department believes that it is appropriate to use a different definition of "shopping center or shopping mall" for this section than for §36.401, in order to make it clear that a series of existing buildings on a common site that is altered for the use of sales or rental establishments does not become a "shopping center or shopping mall" required to install an elevator, unless there is a common means of pedestrian access above or below the ground floor. Without this exemption, separate, but adjacent, buildings that were initially designed and constructed independently of each other could be required to be retrofitted with elevators, if they were later renovated for a purpose not contemplated at the time of construction.

Like §36.401(d), §36.404 provides that the exemptions in this paragraph do not obviate or limit in any way the obligation to comply with the other accessibility requirements established in this subpart. For example, alterations to floors above or below the ground floor must be accessible regardless of whether the altered facility has an elevator. If a facility that is not required to install an elevator nonetheless has an elevator, that elevator shall meet, to the maximum extent feasible, the accessibility requirements of this section.

Section 36.405 Alterations: Historic Preservation

Section 36.405 gives effect to the intent of Congress, expressed in section 504(c) of the Act, that this part recognize the national interest in preserving significant historic structures. Commenters criticized the Department's use of descriptive terms in the proposed rule that are different from those used in the ADA to describe eligible historic properties. In addition, some commenters criticized the Department's decision to use the concept of "substantially impairing" the historic features of a property, which is a concept employed in regulations implementing section 504 of the Rehabilitation Act of 1973. Those commenters recommended that the Department adopt the criteria of "adverse effect" published by the Advisory Council on Historic Preservation under the National Historic Preservation Act (36 CFR 800.9) as the standard for determining whether an historic property may be altered.

The Department agrees with these comments to the extent that they suggest that the language of the rule should conform to the language employed by Congress in the ADA. Therefore, the language of this section has been revised to make it clear that this provision applies to buildings or facilities that are eligible for listing in the National Register of Historic Places under the National Historic Preservation Act (16 U.S.C. 470 *et seq.*) and to buildings or facilities that are designated as historic under State or local law. The Department believes, however, that the criteria of adverse effect employed under the National Historic Preservation Act are inappropriate for this rule because section 504(c) of the ADA specifies that special alterations provisions shall apply only when an alteration would "threaten or destroy the historic significance of qualified historic buildings and facilities."

The Department intends that the exception created by this section be applied only in those very rare situations in which it is not possible to provide access to an historic property using the special access provisions in ADAAG. Therefore, paragraph (a) of §36.405 has been revised to provide that alterations to historic properties shall comply, to the maximum extent feasible, with section 4.1.7 of ADAAG. Paragraph (b) of this section has been revised to provide that if it has been determined, under the procedures established in ADAAG, that it is not feasible to provide physical access to an historic property that is a place of public accommodation in a manner that will not threaten or destroy the historic significance of the property, alternative methods of access shall be provided pursuant to the requirements of Subpart C.

Section 36.406 Standards for New Construction and Alterations

Section 36.406 implements the requirements of sections 306(b) and 306(c) of the Act, which require the Attorney General to promulgate standards for accessible design for buildings and facilities subject to the Act and this part that are consistent with the supplemental minimum guidelines and requirements for accessible design published by the Architectural and Transportation Barriers Compliance Board (ATBCB or Board) pursuant to section 504 of the Act. This section of the rule provides that new construction and alterations subject to this part shall comply with the standards for accessible design published as appendix A to this part.

Appendix A contains the Americans with Disabilities Act Accessibility Guidelines for Buildings and Facilities (ADAAG) which is being published by the ATBCB as a final rule elsewhere in this issue of the FEDERAL REGISTER. As proposed in this Department's proposed rule, §36.406(a) adopts ADAAG as the accessibility standard applicable under this rule.

Paragraph (b) was not included in the proposed rule. It provides, in chart form, guidance for using ADAAG together with subparts A through D of this part when determining requirements for a particular facility. This chart is intended solely as guidance for the user; it has no effect for purposes of

compliance or enforcement. It does not necessarily provide complete or mandatory information.

Proposed §36.406(b) is not included in the final rule. That provision, which would have taken effect only if the final rule had followed the proposed Option Two for §36.401(a), is unnecessary because the Department has chosen Option One, as explained in the preamble for that section.

Section 504(a) of the ADA requires the ATBCB to issue minimum guidelines to supplement the existing Minimum Guidelines and Requirements for Accessible Design (MGRAD) (36 CFR part 1190) for purposes of title III. According to section 504(b) of the Act, the guidelines are to establish additional requirements, consistent with the Act, "to ensure that buildings and facilities are accessible, in terms of architecture and design, . . . and communication, to individuals with disabilities." Section 306(c) of the Act requires that the accessibility standards included in the Department's regulations be consistent with the minimum guidelines, in this case ADAAG.

As explained in the ATBCB's preamble to ADAAG, the substance and form of the guidelines are drawn from several sources. They use as their model the 1984 Uniform Federal Accessibility Standards (UFAS) (41 CFR part 101, subpart 101–19.6, appendix), which are the standards implementing the Architectural Barriers Act. UFAS is based on the Board's 1982 MGRAD. ADAAG follows the numbering system and format of the private sector American National Standard Institute's ANSI A117.1 standards. (American National Specifications for Making Buildings and Facilities Accessible to and Usable by Physically Handicapped People (ANSI A117–1980) and American National Standard for Buildings and Facilities—Providing Accessibility and Usability for Physically Handicapped People (ANSI A117.1–1986).) ADAAG supplements MGRAD. In developing ADAAG, the Board made every effort to be consistent with MGRAD and the current and proposed ANSI Standards, to the extent consistent with the ADA.

ADAAG consists of nine main sections and a separate appendix. Sections 1 through 3 contain general provisions and definitions. Section 4 contains scoping provisions and technical specifications applicable to all covered buildings and facilities. The scoping provisions are listed separately for new construction of sites and exterior facilities; new construction of buildings; additions; alterations; and alterations to historic properties. The technical specifications generally reprint the text and illustrations of the ANSI A117.1 standard, except where differences are noted by italics. Sections 5 through 9 of the guidelines are special application sections and contain additional requirements for restaurants and cafeterias, medical care facilities, business and mercantile facilities, libraries, and transient lodging. The appendix to the guidelines contains additional information to aid in understanding the technical specifications. The section numbers in the appendix correspond to the sections of the guidelines to which they relate. An asterisk after a section number indicates that additional information appears in the appendix.

ADAAG's provisions are further explained under Summary of ADAAG below.

GENERAL COMMENTS

One commenter urged the Department to move all or portions of subpart D, New Construction and Alterations, to the appendix (ADAAG) or to duplicate portions of subpart D in the appendix. The commenter correctly pointed out that subpart D is inherently linked to ADAAG, and that a self-contained set of rules would be helpful to users. The Department has attempted to simplify use of the two documents by deleting some paragraphs from subpart D (e.g., those relating to work areas), because they are included in ADAAG. However, the Department has retained in subpart D those sections that are taken directly from the statute or that give meaning to specific statutory concepts (e.g., structural impracticability, path of travel). While some of the subpart D provisions are duplicated in ADAAG, others are not. For example, issues relating to path of travel and disproportionality in alterations are not addressed in detail in ADAAG. (The structure and contents of the two documents are addressed below under Summary of ADAAG.) While the Department agrees that it would be useful to have one self-contained document, the different focuses of this rule and ADAAG do not permit this result at this time. However, the chart included in §36.406(b) should assist users in applying the provisions of subparts A through D, and ADAAG together.

Numerous business groups have urged the Department not to adopt the proposed ADAAG as the accessibility standards, because the requirements established are too high, reflect the "state of the art," and are inflexible, rigid, and impractical. Many of these objections have been lodged on the basis that ADAAG exceeds the statutory mandate to establish "minimum" guidelines. In the view of the Department, these commenters have misconstrued the meaning of the term "minimum guidelines." The statute clearly contemplates that the guidelines establish a level of access—a minimum—that the standards must meet or exceed. The guidelines are not to be "minimal" in the sense that they would provide for a low level of access. To the contrary, Congress emphasized that the ADA requires a "high degree of

convenient access." Education and Labor report at 117–18. The legislative history explains that the guidelines may not "reduce, weaken, narrow or set less accessibility standards than those included in existing MGRAD" and should provide greater guidance in communication accessibility for individuals with hearing and vision impairments. Id. at 139. Nor did Congress contemplate a set of guidelines less detailed than ADAAG; the statute requires that the ADA guidelines supplement the existing MGRAD. When it established the statutory scheme, Congress was aware of the content and purpose of the 1982 MGRAD; as ADAAG does with respect to ADA, MGRAD establishes a minimum level of access that the Architectural Barriers Act standards (i.e., UFAS) must meet or exceed, and includes a high level of detail.

Many of the same commenters urged the Department to incorporate as its accessibility standards the ANSI standard's technical provisions and to adopt the proposed scoping provisions under development by the Council of American Building Officials' Board for the Coordination of Model Codes (BCMC). They contended that the ANSI standard is familiar to and accepted by professionals, and that both documents are developed through consensus. They suggested that ADAAG will not stay current, because it does not follow an established cyclical review process, and that it is not likely to be adopted by nonfederal jurisdictions in State and local codes. They urged the Department and the Board to coordinate the ADAAG provisions and any substantive changes to them with the ANSI A117 committee in order to maintain a consistent and uniform set of accessibility standards that can be efficiently and effectively implemented at the State and local level through the existing building regulatory processes.

The Department shares the commenters' goal of coordination between the private sector and Federal standards, to the extent that coordination can lead to substantive requirements consistent with the ADA. A single accessibility standard, or consistent accessibility standards, that can be used for ADA purposes and that can be incorporated or referenced by State and local governments, would help to ensure that the ADA requirements are routinely implemented at the design stage. The Department plans to work toward this goal.

The Department, however, must comply with the requirements of the ADA, the Federal Advisory Committee Act (5 U.S.C app. 1 *et seq.*) and the Administrative Procedure Act (5 U.S.C 551 *et seq.*). Neither the Department nor the Board can adopt private requirements wholesale. Furthermore, neither the 1991 ANSI A117 Standard revision nor the BCMC process is complete. Although the ANSI and BCMC provisions are not final, the Board has carefully considered both the draft BCMC scoping provisions and draft ANSI technical standards and included their language in ADAAG wherever consistent with the ADA.

Some commenters requested that, if the Department did not adopt ANSI by reference, the Department declare compliance with ANSI/BCMC to constitute equivalency with the ADA standards. The Department has not adopted this recommendation but has instead worked as a member of the ATBCB to ensure that its accessibility standards are practical and usable. In addition, as explained under subpart F, Certification of State Laws or Local Building Codes, the proper forum for further evaluation of this suggested approach would be in conjunction with the certification process.

Some commenters urged the Department to allow an additional comment period after the Board published its guidelines in final form, for purposes of affording the public a further opportunity to evaluate the appropriateness of including them as the Departments accessibility standards. Such an additional comment period is unnecessary and would unduly delay the issuance of final regulations. The Department put the public on notice, through the proposed rule, of its intention to adopt the proposed ADAAG, with any changes made by the Board, as the accessibility standards. As a member of the Board and of its ADA Task Force, the Department participated actively in the public hearings held on the proposed guidelines and in preparation of both the proposed and final versions of ADAAG. Many individuals and groups commented directly to the Department's docket, or at its public hearings, about ADAAG. The comments received on ADAAG, whether by the Board or by this Department, were thoroughly analyzed and considered by the Department in the context of whether the proposed ADAAG was consistent with the ADA and suitable for adoption as both guidelines and standards. The Department is convinced that ADAAG as adopted in its final form is appropriate for these purposes. The final guidelines, adopted here as standards, will ensure the high level of access contemplated by Congress, consistent with the ADA's balance between the interests of people with disabilities and the business community.

A few commenters, citing the Senate report (at 70) and the Education and Labor report (at 119), asked the Department to include in the regulations a provision stating that departures from particular technical and scoping requirements of the accessibility standards will be permitted so long as the alternative methods used will provide substantially equivalent or greater access to and utilization of the facility. Such a provision is found in ADAAG 2.2 and by virtue of that fact is included in these regulations.

Comments on specific provisions of proposed ADAAG

During the course of accepting comments on its proposed rule, the Department received numerous comments on ADAAG. Those areas that elicited the heaviest response included assistive listening systems, automated teller machines, work areas, parking, areas of refuge, telephones (scoping for TDD's and volume controls) and visual alarms. Strenuous objections were raised by some business commenters to the proposed provisions of the guidelines concerning check-out aisles, counters, and scoping for hotels and nursing facilities. All these comments were considered in the same manner as other comments on the Department's proposed rule and, in the Department's view, have been addressed adequately in the final ADAAG.

Largely in response to comments, the Board made numerous changes from its proposal, including the following:

• Generally, at least 50% of public entrances to new buildings must be accessible, rather than all entrances, as would often have resulted from the proposed approach.

• Not all check-out aisles are required to be accessible.

• The final guidelines provide greater flexibility in providing access to sales counters, and no longer require a portion of every counter to be accessible.

• Scoping for TDD's or text telephones was increased. One TDD or text telephone, for speech and hearing impaired persons, must be provided at locations with 4, rather than 6, pay phones, and in hospitals and shopping malls. Use of portable (less expensive) TDD's is allowed.

• Dispersal of wheelchair seating areas in theaters will be required only where there are more than 300 seats, rather than in all cases. Seats with removable armrests (i.e., seats into which persons with mobility impairments can transfer) will also be required.

• Areas of refuge (areas with direct access to a stairway, and where people who cannot use stairs may await assistance during a emergency evacuation) will be required, as proposed, but the final provisions are based on the Uniform Building Code. Such areas are not required in alterations.

• Rather than requiring 5% of new hotel rooms to be accessible to people with mobility impairments, between 2 and 4% accessibility (depending on total number of rooms) is required. In addition, 1% of the rooms must have roll-in showers.

• The proposed rule reserved the provisions on alterations to homeless shelters. The final guidelines apply alterations requirements to homeless shelters, but the requirements are less stringent than those applied to other types of facilities.

• Parking spaces that can be used by people in vans (with lifts) will be required.

• As mandated by the ADA, the Board has established a procedure to be followed with respect to alterations to historic facilities.

SUMMARY OF ADAAG

This section of the preamble summarizes the structure of ADAAG, and highlights the more important portions.

• *Sections 1 Through 3*

Sections 1 through 3 contain general requirements, including definitions.

• *Section 4.1.1, Application*

Section 4 contains scoping requirements. Section 4.1.1, Application, provides that all areas of newly designed or newly constructed buildings and facilities and altered portions of existing buildings and facilities required to be accessible by §4.1.6 must comply with the guidelines unless otherwise provided in §4.1.1 or a special application section. It addresses areas used only by employees as work areas, temporary structures, and general exceptions.

Section 4.1.1(3) preserves the basic principle of the proposed rule: Areas that may be used by employees with disabilities shall be designed and constructed so that an individual with a disability can approach, enter, and exit the area. The language has been clarified to provide that it applies to any area used only as a work area (not just to areas "that may be used by employees with disabilities"), and that the guidelines do not require that any area used as an individual work station be designed with maneuvering space or equipped to be accessible. The appendix to ADAAG explains that work areas must meet the guidelines' requirements for doors and accessible routes, and recommends, but does not require, that 5% of individual work stations be designed to permit a person using a wheelchair to maneuver within the space.

Further discussion of work areas is found in the preamble concerning proposed §36.401(b).

Section 4.1.1(5)(a) includes an exception for structural impracticability that corresponds to the one found in §36.401(c) and discussed in that portion of the preamble.

• *Section 4.1.2, Accessible Sites and Exterior Facilities: New Construction*

This section addresses exterior features, elements, or spaces such as parking, portable toilets, and exterior signage, in new construction. Interior elements and spaces are covered by §4.1.3.

The final rule retains the UFAS scoping for parking but also requires that at least one of every eight accessible parking spaces be designed with adequate adjacent space to

deploy a lift used with a van. These spaces must have a sign indicating that they are van-accessible, but they are not to be reserved exclusively for van users.

• *Section 4.1.3, Accessible Buildings: New Construction*

This section establishes scoping requirements for new construction of buildings and facilities.

Sections 4.1.3 (1) through (4) cover accessible routes, protruding objects, ground and floor surfaces, and stairs.

Section 4.1.3(5) generally requires elevators to serve each level in a newly constructed building, with four exceptions included in the subsection. Exception 1 is the "elevator exception" established in §36.401(d), which must be read with this section. Exception 4 allows the use of platform lifts under certain conditions.

Section 4.1.3(6), Windows, is reserved. Section 4.1.3(7) applies to doors.

Under §4.1.3(8), at least 50% of all public entrances must be accessible. In addition, if a building is designed to provide access to enclosed parking, pedestrian tunnels, or elevated walkways, at least one entrance that serves each such function must be accessible. Each tenancy in a building must be served by an accessible entrance. Where local regulations (e.g., fire codes) require that a minimum number of exits be provided, an equivalent number of accessible entrances must be provided. (The latter provision does not require a greater number of entrances than otherwise planned.)

ADAAG Section 4.1.3(9), with accompanying technical requirements in Section 4.3, requires an area of rescue assistance (*i.e.*, an area with direct access to an exit stairway and where people who are unable to use stairs may await assistance during an emergency evacuation) to be established on each floor of a multi-story building. This was one of the most controversial provisions in the guidelines. The final ADAAG is based on current Uniform Building Code requirements and retains the requirement that areas of refuge (renamed "areas of rescue assistance") be provided, but specifies that this requirement does not apply to buildings that have a supervised automatic sprinkler system. Areas of refuge are not required in alterations.

The next seven subsections deal with drinking fountains (§4.1.3(10)); toilet facilities (§4.1.3(11)); storage, shelving, and display units (§4.1.3(12)), controls and operating mechanisms (§4.1.3(13)), emergency warning systems (§4.1.3(14)), detectable warnings (§4.1.3(15)), and building signage (§4.1.3(16)). Paragraph 11 requires that toilet facilities comply with §4.22, which requires one accessible toilet stall (60<″×60<″) in each newly constructed restroom. In response to public comments, the final rule requires that a second accessible stall (36<″×60<″) be provided in restrooms that have six or more stalls.

ADAAG Section 4.1.3(17) establishes requirements for accessibility of pay phones to persons with mobility impairments, hearing impairments (requiring some phones with volume controls), and those who cannot use voice telephones. It requires one interior "text telephone" to be provided at any facility that has a total of four or more public pay phones. (The term "text telephone" has been adopted to reflect current terminology and changes in technology.) In addition, text telephones will be required in specific locations, such as covered shopping malls, hospitals (in emergency rooms, waiting rooms, and recovery areas), and convention centers.

Paragraph 18 of Section 4.1.3 generally requires that at least five percent of fixed or built-in seating or tables be accessible.

Paragraph 19, covering assembly areas, specifies the number of wheelchair seating spaces and types and numbers of assistive listening systems required. It requires dispersal of wheelchair seating locations in facilities where there are more than 300 seats. The guidelines also require that at least one percent of all fixed seats be aisle seats without armrests (or with moveable armrests) on the aisle side to increase accessibility for persons with mobility impairments who prefer to transfer from their wheelchairs to fixed seating. In addition, the final ADAAG requires that fixed seating for a companion be located adjacent to each wheelchair location.

Paragraph 20 requires that where automated teller machines are provided, at least one must comply with section 4.34, which, among other things, requires accessible controls, and instructions and other information that are accessible to persons with sight impairments.

Under paragraph 21, where dressing rooms are provided, five percent or at least one must comply with section 4.35.

• *Section 4.1.5, Additions*

Each addition to an existing building or facility is regarded as an alteration subject to §§36.402 through 36.406 of subpart D, including the date established in §36.402(a). But additions also have attributes of new construction, and to the extent that a space or element in the addition is newly constructed, each new space or element must comply with the applicable scoping provisions of sections 4.1.1 to 4.1.3 for new construction, the applicable technical specifications of sections 4.2 through 4.34, and any applicable special provisions in sections 5 through 10. For instance, if a restroom is provided in the addition, it must comply with the requirements for new construction. Construction of an addition does not, however, create an obligation to retrofit the entire existing building

or facility to meet requirements for new construction. Rather, the addition is to be regarded as an alteration and to the extent that it affects or could affect the usability of or access to an area containing a primary function, the requirements in section 4.1.6(2) are triggered with respect to providing an accessible path of travel to the altered area and making the restrooms, telephones, and drinking fountains serving the altered area accessible. For example, if a museum adds a new wing that does not have a separate entrance as part of the addition, an accessible path of travel would have to be provided through the existing building or facility unless it is disproportionate to the overall cost and scope of the addition as established in §36.403(f).

• *Section 4.1.6, Alterations*

An alteration is a change to a building or facility that affects or could affect the usability of or access to the building or facility or any part thereof. There are three general principles for alterations. First, if any existing element or space is altered, the altered element or space must meet new construction requirements (section 4.1.6(1)(b)). Second, if alterations to the elements in a space when considered together amount to an alteration of the space, the entire space must meet new construction requirements (section 4.1.6(1)(c)). Third, if the alteration affects or could affect the usability of or access to an area containing a primary function, the path of travel to the altered area and the restrooms, drinking fountains, and telephones serving the altered area must be made accessible unless it is disproportionate to the overall alterations in terms of cost and scope as determined under criteria established by the Attorney General (§4.1.6(2)).

Section 4.1.6 should be read with §§36.402 through 36.405. Requirements concerning alterations to an area serving a primary function are addressed with greater detail in the latter sections than in section 4.1.6(2). Section 4.1.6(1)(j) deals with technical infeasibility. Section 4.1.6(3) contains special technical provisions for alterations to existing buildings and facilities.

• *Section 4.1.7, Historic Preservation*

This section contains scoping provisions and alternative requirements for alterations to qualified historic buildings and facilities. It clarifies the procedures under the National Historic Preservation Act and their application to alterations covered by the ADA. An individual seeking to alter a facility that is subject to the ADA guidelines and to State or local historic preservation statutes shall consult with the State Historic Preservation Officer to determine if the planned alteration would threaten or destroy the historic significance of the facility.

• *Sections 4.2 Through 4.35*

Sections 4.2 through 4.35 contain the technical specifications for elements and spaces required to be accessible by the scoping provisions (sections 4.1 through 4.1.7) and special application sections (sections 5 through 10). The technical specifications are the same as the 1980 version of ANSI A117.1 standard, except as noted in the text by italics.

• *Sections 5 Through 9*

These are special application sections and contain additional requirements for restaurants and cafeterias, medical care facilities, business and mercantile facilities, libraries, and transient lodging. For example, at least 5 percent, but not less than one, of the fixed tables in a restaurant must be accessible.

In section 7, Business and Mercantile, paragraph 7.2 (Sales and Service Counters, Teller Windows, Information Counters) has been revised to provide greater flexibility in new construction than did the proposed rule. At least one of each type of sales or service counter where a cash register is located shall be made accessible. Accessible counters shall be dispersed throughout the facility. At counters such as bank teller windows or ticketing counters, alternative methods of compliance are permitted. A public accommodation may lower a portion of the counter, provide an auxiliary counter, or provide equivalent facilitation through such means as installing a folding shelf on the front of the counter at an accessible height to provide a work surface for a person using a wheelchair.

Section 7.3., Check-out Aisles, provides that, in new construction, a certain number of each design of check-out aisle, as listed in a chart based on the total number of check-out aisles of each design, shall be accessible. The percentage of check-outs required to be accessible generally ranges from 20% to 40%. In a newly constructed or altered facility with less than 5,000 square feet of selling space, at least one of each type of check-out aisle must be accessible. In altered facilities with 5,000 or more square feet of selling space, at least one of each design of check-out aisle must be made accessible when altered, until the number of accessible aisles of each design equals the number that would be required for new construction.

• *Section 9, Accessible Transient Lodging*

Section 9 addresses two types of transient lodging: hotels, motels, inns, boarding houses, dormitories, resorts, and other similar places (sections 9.1 through 9.4); and homeless shelters, halfway houses, transient group homes, and other social service establishments (section 9.5). The interplay of the ADA and Fair Housing Act with respect to

such facilities is addressed in the preamble discussion of the definition of "place of public accommodation" in §36.104.

The final rule establishes scoping requirements for accessibility of newly constructed hotels. Four percent of the first hundred rooms, and roughly two percent of rooms in excess of 100, must meet certain requirements for accessibility to persons with mobility or hearing impairments, and an additional identical percentage must be accessible to persons with hearing impairments. An additional 1% of the available rooms must be equipped with roll-in showers, raising the actual scoping for rooms accessible to persons with mobility impairments to 5% of the first hundred rooms and 3% thereafter. The final ADAAG also provides that when a hotel is being altered, one fully accessible room and one room equipped with visual alarms, notification devices, and amplified telephones shall be provided for each 25 rooms being altered until the number of accessible rooms equals that required under the new construction standard. Accessible rooms must be dispersed in a manner that will provide persons with disabilities with a choice of single or multiple-bed accommodations.

In new construction, homeless shelters and other social service entities must comply with ADAAG; at least one type of amenity in each common area must be accessible. In a facility that is not required to have an elevator, it is not necessary to provide accessible amenities on the inaccessible floors if at least one of each type of amenity is provided in accessible common areas. The percentage of accessible sleeping accommodations required is the same as that required for other places of transient lodging. Requirements for facilities altered for use as a homeless shelter parallel the current MGRAD accessibility requirements for leased buildings. A shelter located in an altered facility must have at least one accessible entrance, accessible sleeping accommodations in a number equivalent to that established for new construction, at least one accessible toilet and bath, at least one accessible common area, and an accessible route connecting all accessible areas. All accessible areas in a homeless shelter in an altered facility may be located on one level.

Section 10, Transportation Facilities

Section 10 of ADAAG is reserved. On March 20, 1991, the ATBCB published a supplemental notice of proposed rulemaking (56 FR 11874) to establish special access requirements for transportation facilities. The Department anticipates that when the ATBCB issues final guidelines for transportation facilities, this part will be amended to include those provisions.

Subpart E—Enforcement

Because the Department of Justice does not have authority to establish procedures for judicial review and enforcement, subpart E generally restates the statutory procedures for enforcement.

Section 36.501 describes the procedures for private suits by individuals and the judicial remedies available. In addition to the language in section 308(a)(1) of the Act, §36.501(a) of this part includes the language from section 204(a) of the Civil Rights Act of 1964 (42 U.S.C. 2000a–3(a)) which is incorporated by reference in the ADA. A commenter noted that the proposed rule did not include the provision in section 204(a) allowing the court to appoint an attorney for the complainant and authorize the commencement of the civil action without the payment of fees, costs, or security. That provision has been included in the final rule.

Section 308(a)(1) of the ADA permits a private suit by an individual who has reasonable grounds for believing that he or she is "about to be" subjected to discrimination in violation of section 303 of the Act (subpart D of this part), which requires that new construction and alterations be readily accessible to and usable by individuals with disabilities. Authorizing suits to prevent construction of facilities with architectural barriers will avoid the necessity of costly retrofitting that might be required if suits were not permitted until after the facilities were completed. To avoid unnecessary suits, this section requires that the individual bringing the suit have 'reasonable grounds" for believing that a violation is about to occur, but does not require the individual to engage in a futile gesture if he or she has notice that a person or organization covered by title III of the Act does not intend to comply with its provisions.

Section 36.501(b) restates the provisions of section 308(a)(2) of the Act, which states that injunctive relief for the failure to remove architectural barriers in existing facilities or the failure to make new construction and alterations accessible "shall include" an order to alter these facilities to make them readily accessible to and usable by persons with disabilities to the extent required by title III. The Report of the Energy and Commerce Committee notes that "an order to make a facility readily accessible to and usable by individuals with disabilities is mandatory" under this standard. H.R. Rep. No. 485, 101st Cong., 2d Sess, pt 4, at 64 (1990). Also, injunctive relief shall include, where appropriate, requiring the provision of an auxiliary aid or service, modification of a policy, or provision of alternative methods, to the extent required by title III of the Act and this part.

Section 36.502 is based on section 308(b)(1)(A)(i) of the Act, which provides that

the Attorney General shall investigate alleged violations of title III and undertake periodic reviews of compliance of covered entities. Although the Act does not establish a comprehensive administrative enforcement mechanism for investigation and resolution of all complaints received, the legislative history notes that investigation of alleged violations and periodic compliance reviews are essential to effective enforcement of title III, and that the Attorney General is expected to engage in active enforcement and to allocate sufficient resources to carry out this responsibility. Judiciary Report at 67.

Many commenters argued for inclusion of more specific provisions for administrative resolution of disputes arising under the Act and this part in order to promote voluntary compliance and avoid the need for litigation. Administrative resolution is far more efficient and economical than litigation, particularly in the early stages of implementation of complex legislation when the specific requirements of the statute are not widely understood. The Department has added a new paragraph (c) to this section authorizing the Attorney General to initiate a compliance review where he or she has reason to believe there may be a violation of this rule.

Section 36.503 describes the procedures for suits by the Attorney General set out in section 308(b)(1)(B) of the Act. If the Department has reasonable cause to believe that any person or group of persons is engaged in a pattern or practice of resistance to the full enjoyment of any of the rights granted by title III or that any person or group of persons has been denied any of the rights granted by title III and such denial raises an issue of general public importance, the Attorney General may commence a civil action in any appropriate United States district court. The proposed rule provided for suit by the Attorney General "or his or her designee." The reference to a "designee" has been omitted in the final rule because it is unnecessary. The Attorney General has delegated enforcement authority under the ADA to the Assistant Attorney General for Civil Rights. 55 FR 40653 (October 4, 1990) (to be codified at 28 CFR 0.50(l).)

Section 36.504 describes the relief that may be granted in a suit by the Attorney General under section 308(b)(2) of the Act. In such an action, the court may grant any equitable relief it considers to be appropriate, including granting temporary, preliminary, or permanent relief, providing an auxiliary aid or service, modification of policy or alternative method, or making facilities readily accessible to and usable by individuals with disabilities, to the extent required by title III. In addition, a court may award such other relief as the court considers to be appropriate, including monetary damages to persons aggrieved, when requested by the Attorney General.

Furthermore, the court may vindicate the public interest by assessing a civil penalty against the covered entity in an amount not exceeding $50,000 for a first violation and not exceeding $100,000 for any subsequent violation. Section 36.504(b) of the rule adopts the standard of section 308(b)(3) of the Act. This section makes it clear that, in counting the number of previous determinations of violations for determining whether a "first" or "subsequent" violation has occurred, determinations in the same action that the entity has engaged in more than one discriminatory act are to be counted as a single violation. A "second violation" would not accrue to that entity until the Attorney General brought another suit against the entity and the entity was again held in violation. Again, all of the violations found in the second suit would be cumulatively considered as a "subsequent violation."

Section 36.504(c) clarifies that the terms "monetary damages" and "other relief" do not include punitive damages. They do include, however, all forms of compensatory damages, including out-of-pocket expenses and damages for pain and suffering.

Section 36.504(a)(3) is based on section 308(b)(2)(C) of the Act, which provides that, "to vindicate the public interest," a court may assess a civil penalty against the entity that has been found to be in violation of the Act in suits brought by the Attorney General. In addition, §36.504(d), which is taken from section 308(b)(5) of the Act, further provides that, in considering what amount of civil penalty, if any, is appropriate, the court shall give consideration to "any good faith effort or attempt to comply with this part." In evaluating such good faith, the court shall consider "among other factors it deems relevant, whether the entity could have reasonably anticipated the need for an appropriate type of auxiliary aid needed to accommodate the unique needs of a particular individual with a disability."

The "good faith" standard referred to in this section is not intended to imply a willful or intentional standard—that is, an entity cannot demonstrate good faith simply by showing that it did not willfully, intentionally, or recklessly disregard the law. At the same time, the absence of such a course of conduct would be a factor a court should weigh in determining the existence of good faith.

Section 36.505 states that courts are authorized to award attorneys fees, including litigation expenses and costs, as provided in section 505 of the Act. Litigation expenses include items such as expert witness fees, travel expenses, etc. The Judiciary Committee Report specifies that such items are included under the rubric of "attorneys fees" and not "costs" so that such expenses will be assessed against a plaintiff only under the standard set forth in *Christiansburg Garment*

Co. v. *Equal Employment Opportunity Commission,* 434 U.S. 412 (1978). (Judiciary report at 73.)

Section 36.506 restates section 513 of the Act, which encourages use of alternative means of dispute resolution. Section 36.507 explains that, as provided in section 506(e) of the Act, a public accommodation or other private entity is not excused from compliance with the requirements of this part because of any failure to receive technical assistance.

Section 36.305 Effective Date

In general, title III is effective 18 months after enactment of the Americans with Disabilities Act, i.e., January 26, 1992. However, there are several exceptions to this general rule contained throughout title III. Section 36.508 sets forth all of these exceptions in one place.

Paragraph (b) contains the rule on civil actions. It states that, except with respect to new construction and alterations, no civil action shall be brought for a violation of this part that occurs before July 26, 1992, against businesses with 25 or fewer employees and gross receipts of $1,000,000 or less; and before January 26, 1993, against businesses with 10 or fewer employees and gross receipts of $500,000 or less. In determining what constitutes gross receipts, it is appropriate to exclude amounts collected for sales taxes.

Paragraph (c) concerns transportation services provided by public accommodations not primarily engaged in the business of transporting people. The 18-month effective date applies to all of the transportation provisions except those requiring newly purchased or leased vehicles to be accessible. Vehicles subject to that requirement must be accessible to and usable by individuals with disabilities if the solicitation for the vehicle is made on or after August 26, 1990.

Subpart F—Certification of State Labs or Local Building Codes

Subpart F establishes procedures to implement section 308(b)(1)(A)(ii) of the Act, which provides that, on the application of a State or local government, the Attorney General may certify that a State law or local building code or similar ordinance meets or exceeds the minimum accessibility requirements of the Act. In enforcement proceedings, this certification will constitute rebuttable evidence that the law or code meets or exceeds the ADA's requirements.

Three significant changes, further explained below, were made from the proposed subpart, in response to comments. First, the State or local jurisdiction is required to hold a public hearing on its proposed request for certification and to submit to the Department, as part of the information and materials in support of a request for certification, a transcript of the hearing. Second, the time allowed for interested persons and organizations to comment on the request filed with the Department (§36.605(a)(1)) has been changed from 30 to 60 days. Finally, a new §36.608, Guidance concerning model codes, has been added.

Section 36.601 establishes the definitions to be used for purposes of this subpart. Two of the definitions have been modified, and a definition of "model code" has been added. First, in response to a comment, a reference to a code "or part thereof" has been added to the definition of "code." The purpose of this addition is to clarify that an entire code need not be submitted if only part of it is relevant to accessibility, or if the jurisdiction seeks certification of only some of the portions that concern accessibility. The Department does not intend to encourage "piecemeal" requests for certification by a single jurisdiction. In fact, the Department expects that in some cases, rather than certifying portions of a particular code and refusing to certify others, it may notify a submitting jurisdiction of deficiencies and encourage a reapplication that cures those deficiencies, so that the entire code can be certified eventually. Second, the definition of "submitting official" has been modified. The proposed rule defined the submitting official to be the State or local official who has principal responsibility for administration of a code. Commenters pointed out that in some cases more than one code within the same jurisdiction is relevant for purposes of certification. It was also suggested that the Department allow a State to submit a single application on behalf of the State, as well as on behalf of any local jurisdictions required to follow the State accessibility requirements. Consistent with these comments, the Department has added to the definition language clarifying that the official can be one authorized to submit a code on behalf of a jurisdiction.

A definition of "model code" has been added in light of new §36.608.

Most commenters generally approved of the proposed certification process. Some approved of what they saw as the Department's attempt to bring State and local codes into alignment with the ADA. A State agency said that this section will be the backbone of the intergovernmental cooperation essential if the accessibility provisions of the ADA are to be effective.

Some comments disapproved of the proposed process as timeconsuming and laborious for the Department, although some of these comments pointed out that, if the Attorney General certified model codes on which State and local codes are based, many perceived problems would be alleviated. (This point is further addressed by new §36.608.)

Many of the comments received from business organizations, as well as those from some individuals and disability rights groups, addressed the relationship of the ADA requirements and their enforcement, to existing State and local codes and code enforcement systems. These commenters urged the Department to use existing code-making bodies for interpretations of the ADA, and to actively participate in the integration of the ADA into the text of the national model codes that are adopted by State and local enforcement agencies. These issues are discussed in preamble section 36.406 under General comments.

Many commenters urged the Department to evaluate or certify the entire code enforcement system (including any process for hearing appeals from builders of denials by the building code official of requests for variances, waivers, or modifications). Some urged that certification not be allowed in jurisdictions where waivers can be granted, unless there is a clearly identified decision-making process, with written rulings and notice to affected parties of any waiver or modification request. One commenter urged establishment of a dispute resolution mechanism, providing for interpretation (usually through a building official) and an administrative appeals mechanism (generally called Boards of Appeal, Boards of Construction Appeals, or Boards of Review), before certification could be granted.

The Department thoroughly considered these proposals but has declined to provide for certification of processes of enforcement or administration of State and local codes. The statute clearly authorizes the Department to certify the codes themselves for equivalency with the statute; it would be ill-advised for the Department at this point to inquire beyond the face of the code and written interpretations of it. It would be inappropriate to require those jurisdictions that grant waivers or modifications to establish certain procedures before they can apply for certification, or to insist that no deviations can be permitted. In fact, the Department expects that many jurisdictions will allow slight variations from a particular code, consistent with ADAAG itself. ADAAG includes in §2.2 a statement allowing departures from particular requirements where substantially equivalent or greater access and usability is provided. Several sections specifically allow for alternative methods providing equivalent facilitation and, in some cases, provide examples. (See, e.g., section 4.31.9, Text Telephones; section 7.2(2) (iii), Sales and Service Counters.) Section 4.1.6 includes less stringent requirements that are permitted in alterations, in certain circumstances.

However, in an attempt to ensure that it does not certify a code that in practice has been or will be applied in a manner that defeats its equivalency with the ADA, the Department will require that the submitting official include, with the application for certification, any relevant manuals, guides, or any other interpretive information issued that pertain to the code. (§36.603(c)(1).) The requirement that this information be provided is in addition to the NPRM's requirement that the official provide any pertinent formal opinions of the State Attorney General or the chief legal officer of the jurisdiction.

The first step in the certification process is a request for certification, filed by a "submitting official" (§36.603). The Department will not accept requests for certification until after January 26, 1992, the effective date of this part. The Department received numerous comments from individuals and organizations representing a variety of interests, urging that the hearing required to be held by the Assistant Attorney General in Washington, DC, after a preliminary determination of equivalency (§36.605(a)(2)), be held within the State or locality requesting certification, in order to facilitate greater participation by all interested parties. While the Department has not modified the requirement that it hold a hearing in Washington, it has added a new subparagraph 36.603(b)(3) requiring a hearing within the State or locality before a request for certification is filed. The hearing must be held after adequate notice to the public and must be on the record; a transcript must be provided with the request for certification. This procedure will insure input from the public at the State or local level and will also insure a Washington, DC, hearing as mentioned in the legislative history.

The request for certification, along with supporting documents (§36.603(c)), must be filed in duplicate with the office of the Assistant Attorney General for Civil Rights. The Assistant Attorney General may request further information. The request and supporting materials will be available for public examination at the office of the Assistant Attorney General and at the office of the State or local agency charged with administration and enforcement of the code. The submitting official must publish public notice of the request for certification.

Next, under §36.604, the Assistant Attorney General's office will consult with the ATBCB and make a preliminary determination to either (1) find that the code is equivalent (make a "preliminary determination of equivalency") or (2) deny certification. The next step depends on which of these preliminary determinations is made.

If the preliminary determination is to find equivalency, the Assistant Attorney General, under §36.605, will inform the submitting official in writing of the preliminary determination and publish a notice in the FEDERAL REGISTER informing the public of the

preliminary determination and inviting comment for 60 days. (This time period has been increased from 30 days in light of public comment pointing out the need for more time within which to evaluate the code.) After considering the information received in response to the comments, the Department will hold an hearing in Washington. This hearing will not be subject to the formal requirements of the Administrative Procedure Act. In fact, this requirement could be satisfied by a meeting with interested parties. After the hearing, the Assistant Attorney General's office will consult again with the ATBCB and make a final determination of equivalency or a final determination to deny the request for certification, with a notice of the determination published in the FEDERAL REGISTER.

1If the preliminary determination is to deny certification, there will be no hearing (§36.606). The Department will notify the submitting official of the preliminary determination, and may specify how the code could be modified in order to receive a preliminary determination of equivalency. The Department will allow at least 15 days for the submitting official to submit relevant material in opposition to the preliminary denial. If none is received, no further action will be taken. If more information is received, the Department will consider it and make either a final decision to deny certification or a preliminary determination of equivalency. If at that stage the Assistant Attorney General makes a preliminary determination of equivalency, the hearing procedures set out in §36.605 will be followed.

Section 36.607 addresses the effect of certification. First, certification will only be effective concerning those features or elements that are both (1) covered by the certified code and (2) addressed by the regulations against which they are being certified. For example, if children's facilities are not addressed by the Department's standards, and the building in question is a private elementary school, certification will not be effective for those features of the building to be used by children. And if the Department's regulations addressed equipment but the local code did not, a building's equipment would not be covered by the certification.

In addition, certification will be effective only for the particular edition of the code that is certified. Amendments will not automatically be considered certified, and a submitting official will need to reapply for certification of the changed or additional provisions.

Certification will not be effective in those situations where a State or local building code official allows a facility to be constructed or altered in a manner that does not follow the technical or scoping provisions of the certified code. Thus, if an official either waives an accessible element or feature or allows a change that does not provide equivalent facilitation, the fact that the Department has certified the code itself will not stand as evidence that the facility has been constructed or altered in accordance with the minimum accessibility requirements of the ADA. The Department's certification of a code is effective only with respect to the standards in the code; it is not to be interpreted to apply to a State or local government's application of the code. The fact that the Department has certified a code with provisions concerning waivers, variances, or equivalent facilitation shall not be interpreted as an endorsement of actions taken pursuant to those provisions.

The final rule includes a new §36.608 concerning model codes. It was drafted in response to concerns raised by numerous commenters, many of which have been discussed under General comments (§36.406). It is intended to assist in alleviating the difficulties posed by attempting to certify possibly tens of thousands of codes. It is included in recognition of the fact that many codes are based on, or incorporate, model or consensus standards developed by nationally recognized organizations (e.g., the American National Standards Institute (ANSI); Building Officials and Code Administrators (BOCA) International; Council of American Building Officials (CABO) and its Board for the Coordination of Model Codes (BCMC); Southern Building Code Congress International (SBCCI)). While the Department will not certify or "precertify" model codes, as urged by some commenters, it does wish to encourage the continued viability of the consensus and model code process consistent with the purposes of the ADA.

The new section therefore allows an authorized representative of a private entity responsible for developing a model code to apply to the Assistant Attorney General for review of the code. The review process will be informal and will not be subject to the procedures of §§36.602 through 36.607. The result of the review will take the form of guidance from the Assistant Attorney General as to whether and in what respects the model code is consistent with the ADA's requirements. The guidance will not be binding on any entity or on the Department; it will assist in evaluations of individual State or local codes and may serve as a basis for establishing priorities for consideration of individual codes. The Department anticipates that this approach will foster further cooperation among various government levels, the private entities developing standards, and individuals with disabilities.