AUTHENTICATED
U.S. GOVERNMENT
INFORMATION
GPO

SUBCHAPTER C—AIR PROGRAMS—(CONTINUED)

PART 52—APPROVAL AND PROMULGATION OF IMPLEMENTATION PLANS

Subpart A—General Provisions

Sec.
52.01 Definitions.
52.02 Introduction.
52.04 Classification of regions.
52.05 Public availability of emission data.
52.06 Legal authority.
52.07 Control strategies.
52.08 Rules and regulations.
52.09 Compliance schedules.
52.10 Review of new sources and modifications.
52.11 Prevention of air pollution emergency episodes.
52.12 Source surveillance.
52.13 Air quality surveillance; resources; intergovernmental cooperation.
52.14 State ambient air quality standards.
52.15 Public availability of plans.
52.16 Submission to Administrator.
52.17 Severability of provisions.
52.18 Abbreviations.
52.20 Attainment dates for national standards.
52.21 Prevention of significant deterioration of air quality.
52.23 Violation and enforcement.
52.24 Statutory restriction on new sources.
52.26 Visibility monitoring strategy.
52.27 Protection of visibility from sources in attainment areas.
52.28 Protection of visibility from sources in nonattainment areas.
52.29 Visibility long-term strategies.
52.30 Criteria for limiting application of sanctions under section 110(m) of the Clean Air Act on a statewide basis.
52.31 Selection of sequence of mandatory sanctions for findings made pursuant to section 179 of the Clean Air Act.
52.32 Sanctions following findings of SIP inadequacy.
52.33 Compliance certifications.
52.34 Action on petitions submitted under section 126 relating to emissions of nitrogen oxides.

Subpart B—Alabama

52.50 Identification of plan.
52.51 Classification of regions.
52.53 Approval status.
52.56 Review of new sources and modifications.
52.57 Control strategy: Sulfur oxides.
52.58 Control strategy: Lead.
52.60 Significant deterioration of air quality.
52.61 Visibility protection.
52.62 Control strategy: Sulfur oxides and particulate matter.
52.63 PM_{10} State Implementation Plan development in group II areas.
52.64 [Reserved]
52.65 Control strategy: Nitrogen oxides.
52.66 Control strategy: Ozone.
52.69 Original identification of plan section.

Subpart C—Alaska

52.70 Identification of plan.
52.71 Classification of regions.
52.72 Approval status.
52.73 Approval of plans.
52.74 [Reserved]
52.75 Contents of the approved state-submitted implementation plan.
52.76 1990 Base Year Emission Inventory.
52.77–52.81 [Reserved]
52.82 Extensions.
52.83–52.95 [Reserved]
52.96 Significant deterioration of air quality.

Subpart D—Arizona

52.111 Toll free number assignment.
52.120 Identification of plan.
52.121 Classification of regions.
52.122 Negative declarations.
52.123 Approval status.
52.124 Part D disapproval.
52.125 Control strategy and regulations: Sulfur oxides.
52.126 Control strategy and regulations: Particulate matter.
52.127 Commitment to promulgate and implement reasonably available control measures for the agricultural fields and aprons.
52.128 Rule for unpaved parking lots, unpaved roads and vacant lots.
52.129 Review of new sources and modifications.
52.130 Source surveillance.
52.131–52.132 [Reserved]
52.133 Rules and regulations.
52.134 Compliance schedules.
52.135 Resources.
52.136 Control strategy for ozone: Oxides of nitrogen.
52.137 [Reserved]
52.138 Conformity procedures.
52.139 [Reserved]
52.140 Monitoring transportation trends.
52.141 [Reserved]
52.142 Federal Implementation Plan for Tri-Cities landfill, Salt River Pima-Maricopa Indian Community.
52.143 [Reserved]
52.144 Significant deterioration of air quality.

52.145 Visibility protection.
52.146 Particulate matter (PM–10) Group II SIP commitments.
52.150 Yavapai-Apache Reservation.

Subpart E—Arkansas

52.170 Identification of plan.
52.171 Classification of regions.
52.172 Approval status.
52.173–52.180 [Reserved]
52.181 Significant deterioration of air quality.
52.183 Small business assistance program.
52.200 Original identification of plan section.

Subpart F—California

52.219 Identification of plan—conditional approval.
52.220 Identification of plan.
52.221 Classifications of regions.
52.222 Negative declarations.
52.223 Approval status.
52.224 General requirements.
52.225 Legal authority.
52.226 Control strategy and regulations: Particulate matter, San Joaquin Valley and Mountain Counties Intrastate Regions.
52.227 Control strategy and regulations: Particulate matter, Metropolitan Los Angeles Intrastate Region.
52.228 Regulations: Particulate matter, Southeast Desert Intrastate Region.
52.229 Control strategy and regulations: Photochemical oxidants (hydrocarbons), Metropolitan Los Angeles Intrastate Region.
52.230 Control strategy and regulations: Nitrogen dioxide.
52.231 Regulations: Sulfur oxides.
52.232 Part D conditional approval.
52.233 Review of new sources and modifications.
52.234 Source surveillance.
52.235 Control strategy for ozone: Oxides of nitrogen.
52.236 Rules and regulations.
52.237 Part D disapproval.
52.238 Commitment to undertake rulemaking.
52.239 Alternate compliance plans.
52.240 Compliance schedules.
52.241 Interim approval of enhanced inspection and maintenance program.
52.242 Disapproved rules and regulations.
52.243 Interim approval of the Carbon Monoxide plan for the South Coast.
52.244 Motor vehicle emissions budgets.
52.245 [Reserved]
52.246 Control of dry cleaning solvent vapor losses.
52.247–52.251 [Reserved]
52.252 Control of degreasing operations.
52.253 Metal surface coating thinner and reducer.
52.254 Organic solvent usage.
52.255 Gasoline transfer vapor control.
52.256 Control of evaporative losses from the filling of vehicular tanks.
52.257–52.262 [Reserved]
52.263 Priority treatment for buses and carpools—Los Angeles Region.
52.264–52.268 [Reserved]
52.269 Control strategy and regulations: Photochemical oxidants (hydrocarbons) and carbon monoxide.
52.270 Significant deterioration of air quality.
52.271 Malfunction, startup, and shutdown regulations.
52.272 Research operations exemptions.
52.273 Open burning.
52.274 California air pollution emergency plan.
52.275 Particulate matter control.
52.276 Sulfur content of fuels.
52.277 Oxides of nitrogen, combustion gas concentration limitations.
52.278 Oxides of nitrogen control.
52.279 Food processing facilities.
52.280 Fuel burning equipment.
52.281 Visibility protection.

Subpart G—Colorado

52.320 Identification of plan.
52.321 Classification of regions.
52.322 Extensions.
52.323 Approval status.
52.324 Legal authority.
52.325 [Reserved]
52.326 Area-wide nitrogen oxides (NO_X) exemptions.
52.327–52.328 [Reserved]
52.329 Rules and regulations.
52.330 Control strategy: Total suspended particulates.
52.331 Committal SIP for the Colorado Group II PM_{10} areas.
52.332 Control strategy: Particulate matter.
52.333–52.342 [Reserved]
52.343 Significant deterioration of air quality.
52.344 Visibility protection.
52.345 Stack height regulations.
52.346 Air quality monitoring requirements.
52.347 [Reserved]
52.348 Emission inventories.
52.349 Control strategy: Carbon monoxide.
52.350 Control strategy: Ozone.
52.351 United States Postal Service substitute Clean Fuel Fleet Program.

Subpart H—Connecticut

52.369 [Reserved]
52.370 Identification of plan.
52.371 Classification of regions.
52.372 Extensions.
52.373 Approval status.
52.374 Attainment dates for national standards.

52.375 Certification of no sources.
52.376 Control strategy: Carbon monoxide.
52.377 Control strategy: Ozone.
52.378–52.379 [Reserved]
52.380 Rules and regulations.
52.381 Requirements for State implementation plan revisions relating to new motor vehicles.
52.382 Significant deterioration of air quality.
52.383 Stack height review.
52.384 Emission inventories.
52.385 EPA-approved Connecticut regulations.

Subpart I—Delaware

52.420 Identification of plan.
52.421 Classification of regions.
52.422 Approval status.
52.423 1990 Base Year Emission Inventory.
52.424 Conditional approval.
52.425 [Reserved]
52.426 Control Strategy plans for attainment and rate–of–progress: ozone.
52.427–52.429 [Reserved]
52.430 Photochemical assessment monitoring stations (PAMS) program.
52.431 [Reserved]
52.432 Significant deterioration of air quality.
52.433 Requirements for State implementation plan revisions relating to new motor vehicles.
52.460 Small business stationary source technical and environmental compliance assistance program.
52.465 Original identification of plan section.

Subpart J—District of Columbia

52.470 Identification of plan.
52.471 Classification of regions.
52.472 Approval status.
52.473 Conditional approval.
52.474 1990 Base Year Emission Inventory.
52.475 Extensions.
52.476 Control strategy: ozone.
52.477 [Reserved]
52.478 Rules and Regulations.
52.479 Source surveillance.
52.480 Photochemical assessment monitoring stations (PAMS) program.
52.481–52.497 [Reserved]
52.498 Requirements for State implementation plan revisions relating to new motor vehicles.
52.499 Significant deterioration of air quality.
52.510 Small business assistance program.
52.515 Original identification of plan section.

Subpart K—Florida

52.520 Identification of plan.
52.521 Classification of regions.
52.522 Approval status.
52.523 [Reserved]
52.524 Compliance schedules.
52.525 General requirements.
52.526 Legal authority.
52.527 Control strategy: General.
52.528 Control strategy: Sulfur oxides and particulate matter.
52.529 [Reserved]
52.530 Significant deterioration of air quality.
52.532 Extensions.
52.533 Source surveillance.
52.534 Visibility protection.
52.536 Original identification of plan section.

Subpart L—Georgia

52.569 [Reserved]
52.570 Identification of plan.
52.571 Classification of regions.
52.572 Approval status.
52.573 Control strategy: General.
52.574–52.575 [Reserved]
52.576 Compliance schedules.
52.577 [Reserved]
52.578 Control strategy: Sulfur oxides and particulate matter.
52.579 Economic feasibility considerations.
52.580 [Reserved]
52.581 Significant deterioration of air quality.
52.582 Control strategy: Ozone.
52.583 Additional rules and regulations.
52.590 Original Identification of plan section.

Subpart M—Hawaii

52.620 Identification of plan.
52.621 Classification of regions.
52.622 [Reserved]
52.623 Approval status.
52.624 General requirements.
52.625 Legal authority.
52.626 Compliance schedules.
52.627–52.631 [Reserved]
52.632 Significant deterioration of air quality.
52.633 Visibility protection.
52.634 Particulate matter (PM–10) Group III SIP.

Subpart N—Idaho

52.670 Identification of plan.
52.671 Classification of regions.
52.672 Approval of plans.
52.673 Approval status.
52.674 [Reserved]
52.675 Control strategy: Sulfur oxides—Eastern Idaho Intrastate Air Quality Control Region.
52.676 [Reserved]
52.677–52.678 [Reserved]
52.679 Contents of Idaho State implementation plan.

52.680 [Reserved]
52.681 Permits to construct and tier II operating permits.
52.682 [Reserved]
52.683 Significant deterioration of air quality.
52.684–52.689 [Reserved]
52.690 Visibility protection.
52.691 Extensions.

Subpart O—Illinois

52.719 [Reserved]
52.720 Identification of plan.
52.721 Classification of regions.
52.722 Approval status.
52.723 [Reserved]
52.724 Control strategy: Sulfur dioxide.
52.725 Control strategy: Particulates.
52.726 Control strategy: Ozone.
52.727 [Reserved]
52.728 Control strategy: Nitrogen dioxide. [Reserved]
52.729 Control strategy: Carbon monoxide.
52.730 Compliance schedules.
52.731–52.735 [Reserved]
52.736 Review of new sources and modifications.
52.737 Operating permits.
52.738 Significant deterioration of air quality.
52.739 Permit fees.
52.740 Interstate pollution.
52.741 Control strategy: Ozone control measures for Cook, DuPage, Kane, Lake, McHenry and Will Counties.
52.742 Incorporation by reference.
52.743 Continuous monitoring.
52.744 Small business stationary source technical and environmental compliance assistance program.

Subpart P—Indiana

52.769 Identification of plan—conditional approval.
52.770 Identification of plan.
52.771 Classification of regions.
52.772 [Reserved]
52.773 Approval status.
52.774 [Reserved]
52.775 Legal authority.
52.776 Control strategy: Particulate matter.
52.777 Control strategy: Photochemical oxidants (hydrocarbons).
52.778 Compliance schedules.
52.779 [Reserved]
52.780 Review of new sources and modifications.
52.781 Rules and regulations.
52.782 Request for 18-month extension.
52.783 [Reserved]
52.784 Transportation and land use controls.
52.785 Control strategy: Carbon monoxide.
52.786 Inspection and maintenance program.
52.787 Gasoline transfer vapor control.
52.788 Operating permits.
52.789–52.792 [Reserved]
52.793 Significant deterioration of air quality.
52.794 Source surveillance.
52.795 Control strategy: Sulfur dioxide.
52.796 Industrial continuous emission monitoring.
52.797 Control strategy: Lead.
52.798 Small business stationary source technical and environmental compliance assistance program.

Subpart Q—Iowa

52.820 Identification of plan.
52.821 Classification of regions.
52.822 Approval status.
52.823 PM_{10} State Implementation Plan Development in Group II Areas.
52.824 Original identification of plan section.
52.825 Compliance schedules.
52.826–52.827 [Reserved]
52.828 Enforcement.
52.829–52.832 [Reserved]
52.833 Significant deterioration of air quality.
52.834 Control strategy: Sulfur dioxide.

Subpart R—Kansas

52.869 [Reserved]
52.870 Identification of plan.
52.871 Classification of regions.
52.872 Operating permits.
52.873 Approval status.
52.874 Legal authority.
52.875 Original identification of plan section.
52.876 Compliance schedules.
52.877–52.880 [Reserved]
52.881 PM_{10} State implementation plan development in group II areas.
52.882–52.883 [Reserved]
52.884 Significant deterioration of air quality.

Subpart S—Kentucky

52.919 Identification of plan-conditional approval.
52.920 Identification of plan.
52.921 Classification of regions.
52.922 [Reserved]
52.923 Approval status.
52.924 Legal authority.
52.925 General requirements.
52.926 Attainment dates for national standards.
52.927 Compliance schedules.
52.928 Control strategy: Sulphur oxides.
52.929 [Reserved]
52.930 Control strategy: Ozone.
52.931 Significant deterioration of air quality.
52.932 Rules and regulations.
52.933 Control strategy: Sulfur oxides and particulate matter.

52.934 VOC rule deficiency correction.
52.935 PM_{10} State implementation plan development in group II areas.
52.936 Visibility protection.
52.937 Review of new sources and modifications.
52.938 General conformity.
52.939 Original identification of plan section.

Subpart T—Louisiana

52.970 Identification of plan.
52.971 Classification of regions.
52.972–52.974 [Reserved]
52.975 Redesignations and maintenance plans; ozone.
52.976 Review of new sources and modification.
52.977–52.985 [Reserved]
52.986 Significant deterioration of air quality.
52.987 Control of hydrocarbon emissions.
52.988 [Reserved]
52.990 Stack height regulations
52.991 Small business assistance program.
52.992 Area-wide nitrogen oxides exemptions.
52.993 Emissions inventories.
52.994 [Reserved]
52.995 Enhanced ambient air quality monitoring.
52.996 Disapprovals.
52.999 Original Identification of plan section.

AUTHORITY: 42 U.S.C. 7401 *et seq.*

Subpart A—General Provisions

SOURCE: 37 FR 10846, May 31, 1972, unless otherwise noted.

§ 52.01 Definitions.

All terms used in this part but not defined herein shall have the meaning given them in the Clean Air Act and in parts 51 and 60 of this chapter.

(a) The term *stationary source* means any building, structure, facility, or installation which emits or may emit an air pollutant for which a national standard is in effect.

(b) The term *commenced* means that an owner or operator has undertaken a continuous program of construction or modification.

(c) The term *construction* means fabrication, erection, or installation.

(d) The phrases *modification* or *modified source* mean any physical change in, or change in the method of operation of, a stationary source which increases the emission rate of any pollutant for which a national standard has been promulgated under part 50 of this chapter or which results in the emission of any such pollutant not previously emitted, except that:

(1) Routine maintenance, repair, and replacement shall not be considered a physical change, and

(2) The following shall not be considered a change in the method of operation:

(i) An increase in the production rate, if such increase does not exceed the operating design capacity of the source;

(ii) An increase in the hours of operation;

(iii) Use of an alternative fuel or raw material, if prior to the effective date of a paragraph in this part which imposes conditions on or limits modifications, the source is designed to accommodate such alternative use.

(e) The term *startup* means the setting in operation of a source for any purpose.

(f) [Reserved]

(g) The term *heat input* means the total gross calorific value (where gross calorific value is measured by ASTM Method D2015–66, D240–64, or D1826–64) of all fuels burned.

(h) The term *total rated capacity* means the sum of the rated capacities of all fuel-burning equipment connected to a common stack. The rated capacity shall be the maximum guaranteed by the equipment manufacturer or the maximum normally achieved during use, whichever is greater.

[37 FR 19807, Sept. 22, 1972, as amended at 38 FR 12698, May 14, 1973; 39 FR 42514, Dec. 5, 1974; 43 FR 26410, June 19, 1978]

§ 52.02 Introduction.

(a) This part sets forth the Administrator's approval and disapproval of State plans and the Administrator's promulgation of such plans or portions thereof. Approval of a plan or any portion thereof is based upon a determination by the Administrator that such plan or portion meets the requirements of section 110 of the Act and the provisions of part 51 of this chapter.

(b) Any plan or portion thereof promulgated by the Administrator substitutes for a State plan or portion

thereof disapproved by the Administrator or not submitted by a State, or supplements a State plan or portion thereof. The promulgated provisions, together with any portions of a State plan approved by the Administrator, constitute the applicable plan for purposes of the Act.

(c) Where nonregulatory provisions of a plan are disapproved, the disapproval is noted in this part and a detailed evaluation is provided to the State, but no substitute provisions are promulgated by the Administrator.

(d) All approved plans and plan revisions listed in subparts B through DDD of this part and on file at the Office of the Federal Register are approved for incorporation by reference by the Director of the Federal Register in accordance with 5 U.S.C. 552(a) and 1 CFR part 51. Notice of amendments to the plans will be published in the FEDERAL REGISTER. The plans and plan revisions are available for inspection at the National Archives and Records Administration (NARA). For information on the availability of this material at NARA, call 202–741–6030, or go to: *http://www.archives.gov/federal_register/code_of_federal_regulations/ibr_locations.html.* In addition the plans and plan revisions are available at the following locations:

(1) Office of Air and Radiation, Docket and Information Center (Air Docket), EPA, 401 M St., SW., Room M1500, Washington, DC 20460.

(2) The appropriate EPA Regional Office as listed below:

(i) Connecticut, Maine, Massachusetts, New Hampshire, Rhode Island, and Vermont. Environmental Protection Agency, Region 1, John F. Kennedy Federal Building, One Congress Street, Boston, MA 02203.

(ii) New York, New Jersey, Puerto Rico, and Virgin Islands. Environmental Protection Agency, Region 2, 290 Broadway, New York, NY 10007–1866.

(iii) Delaware, District of Columbia, Pennsylvania, Maryland, Virginia, and West Virginia. Environmental Protection Agency, Region 3, 841 Chestnut Building, Philadelphia, PA 19107.

(iv) Alabama, Florida, Georgia, Kentucky, Mississippi, North Carolina, South Carolina, and Tennessee Environmental Protection Agency, Region 4, 345 Courtland Street, N.E., Atlanta, GA 30365.

(v) Illinois, Indiana, Michigan, Minnesota, Ohio, and Wisconsin. Environmental Protection Agency, Region 5, 77 West Jackson Boulevard, Chicago, IL 60604–3507.

(vi) Arkansas, Louisiana, New Mexico, Oklahoma, and Texas. Environmental Protection Agency, Region 6, Fountain Place, 1445 Ross Avenue, Suite 1200, Dallas TX 75202–2733.

(vii) Iowa, Kansas, Missouri, and Nebraska. Environmental Protection Agency, Region 7, 726 Minnesota Avenue, Kansas City, KS 66101.

(viii) Colorado, Montana, North Dakota, South Dakota, Utah, and Wyoming. Environmental Protection Agency, Region 8, 999 18th Street, Suite 500, Denver, CO 80202–2466.

(ix) Arizona, California, Hawaii, Nevada, American Samoa, and Guam. Environmental Protection Agency, Region 9, 75 Hawthorne Street, San Francisco, CA 94105.

(x) Alaska, Idaho, Oregon, and Washington. Environmental Protection Agency, Region 10, 1200 6th Avenue Seattle, WA 98101.

(e) Each State's plan is dealt with in a separate subpart, which includes an introductory section identifying the plan by name and the date of its submittal, a section classifying regions, and a section setting forth dates for attainment of the national standards. Additional sections are included as necessary to specifically identify disapproved provisions, to set forth reasons for disapproval, and to set forth provisions of the plan promulgated by the Administrator. Except as otherwise specified, all supplemental information submitted to the Administrator with respect to any plan has been submitted by the Governor of the State.

(f) Revisions to applicable plans will be included in this part when approved or promulgated by the Administrator.

[37 FR 10846, May 31, 1972, as amended at 37 FR 15080, July 27, 1972; 47 FR 38886, Sept. 3, 1982; 61 FR 16060, Apr. 11, 1996]

§ 52.04 Classification of regions.

Each subpart sets forth the priority classification, by pollutant, for each region in the State. Each plan for each region was evaluated according to the

requirements of part 51 of this chapter applicable to regions of that priority.

§ 52.05 Public availability of emission data.

Each subpart sets forth the Administrator's disapproval of plan procedures for making emission data available to the public after correlation with applicable emission limitations, and includes the promulgation of requirements that sources report emission data to the Administrator for correlation and public disclosure.

§ 52.06 Legal authority.

(a) The Administrator's determination of the absence or inadequacy of legal authority required to be included in the plan is set forth in each subpart. This includes the legal authority of local agencies and State governmental agencies other than an air pollution control agency if such other agencies are assigned responsibility for carrying out a plan or portion thereof.

(b) No legal authority as such is promulgated by the Administrator. Where required regulatory provisions are not included in the plan by the State because of inadequate legal authority, substitute provisions are promulgated by the Administrator.

[37 FR 10846, May 31, 1972, as amended at 60 FR 33922, June 29, 1995]

§ 52.07 Control strategies.

(a) Each subpart specifies in what respects the control strategies are approved or disapproved. Where emission limitations with a future effective date are employed to carry out a control strategy, approval of the control strategy and the implementing regulations does not supersede the requirements of subpart N of this chapter relating to compliance schedules for individual sources or categories of sources. Compliance schedules for individual sources or categories of sources must require such sources to comply with applicable requirements of the plan as expeditiously as practicable, where the requirement is part of a control strategy designed to attain a primary standard, or within a reasonable time, where the requirement is part of a control strategy designed to attain a secondary standard. All sources must be required to comply with applicable requirements of the plan no later than the date specified in this part for attainment of the national standard which the requirement is intended to implement.

(b) A control strategy may be disapproved as inadequate because it is not sufficiently comprehensive, although all regulations provided to carry out the strategy may themselves be approved. In this case, regulations for carrying out necessary additional measures are promulgated in the subpart.

(c) Where a control strategy is adequate to attain and maintain a national standard but one or more of the regulations to carry it out is not adopted or not enforceable by the State, the control strategy is approved and the necessary regulations are promulgated by the Administrator.

(d) Where a control strategy is adequate to attain and maintain air quality better than that provided for by a national standard but one or more of the regulations to carry it out is not adopted or not enforceable by the State, the control strategy is approved and substitute regulations necessary to attain and maintain the national standard are promulgated.

[37 FR 10846, May 31, 1972, as amended at 37 FR 19807, Sept. 22, 1972; 51 FR 40676, Nov. 7, 1986]

§ 52.08 Rules and regulations.

Each subpart identifies the regulations, including emission limitations, which are disapproved by the Administrator, and includes the regulations which the Administrator promulgates.

§ 52.09 Compliance schedules.

(a) In each subpart, compliance schedules disapproved by the Administrator are identified, and compliance schedules promulgated by the Administrator are set forth.

(b) Individual source compliance schedules submitted with certain plans have not yet been evaluated, and are not approved or disapproved.

(c) The Administrator's approval or promulgation of any compliance schedule shall not affect the responsibility of the owner or operator to comply

with any applicable emission limitation on and after the date for final compliance specified in the applicable schedule.

[37 FR 10846, May 31, 1972, as amended at 38 FR 30877, Nov. 8, 1973]

§ 52.10 Review of new sources and modifications.

In any plan where the review procedure for new sources and source modifications does not meet the requirements of subpart I of this chapter, provisions are promulgated which enable the Administrator to obtain the necessary information and to prevent construction or modification.

[37 FR 10846, May 31, 1972, as amended at 51 FR 40677, Nov. 7, 1986]

§ 52.11 Prevention of air pollution emergency episodes.

(a) Each subpart identifies portions of the air pollution emergency episode contingency plan which are disapproved, and sets forth the Administrator's promulgation of substitute provisions.

(b) No provisions are promulgated to replace any disapproved air quality monitoring or communications portions of a contingency plan, but detailed critiques of such portions are provided to the State.

(c) Where a State plan does not provide for public announcement regarding air pollution emergency episodes or where the State fails to give any such public announcement, the Administrator will issue a public announcement that an episode stage has been reached. When making such an announcement, the Administrator will be guided by the suggested episode criteria and emission control actions suggested in Appendix L of part 51 of this chapter or those in the approved plan.

[37 FR 10846, May 31, 1972, as amended at 37 FR 19807, Sept. 22, 1972]

§ 52.12 Source surveillance.

(a) Each subpart identifies the plan provisions for source surveillance which are disapproved, and sets forth the Administrator's promulgation of necessary provisions for requiring sources to maintain records, make reports, and submit information.

(b) No provisions are promulgated for any disapproved State or local agency procedures for testing, inspection, investigation, or detection, but detailed critiques of such portions are provided to the State.

(c) For purposes of Federal enforcement, the following test procedures and methods shall be used, provided that for the purpose of establishing whether or not a person has violated or is in violation of any provision of the plan, nothing in this part shall preclude the use, including the exclusive use, of any credible evidence or information, relevant to whether a source would have been in compliance with applicable requirements if the appropriate performance or compliance test procedures or methods had been performed:

(1) Sources subject to plan provisions which do not specify a test procedure and sources subject to provisions promulgated by the Administrator will be tested by means of the appropriate procedures and methods prescribed in part 60 of this chapter unless otherwise specified in this part.

(2) Sources subject to approved provisions of a plan wherein a test procedure is specified will be tested by the specified procedure.

[37 FR 10846, May 31, 1972, as amended at 40 FR 26032, June 20, 1975; 62 FR 8328, Feb. 24, 1997]

§ 52.13 Air quality surveillance; resources; intergovernmental cooperation.

Disapproved portions of the plan related to the air quality surveillance system, resources, and intergovernmental cooperation are identified in each subpart, and detailed critiques of such portions are provided to the State. No provisions are promulgated by the Administrator.

§ 52.14 State ambient air quality standards.

Any ambient air quality standard submitted with a plan which is less stringent than a national standard is not considered part of the plan.

§ 52.15 Public availability of plans.

Each State shall make available for public inspection at least one copy of

the plan in at least one city in each region to which such plan is applicable. All such copies shall be kept current.

§ 52.16 Submission to Administrator.

(a) All requests, reports, applications, submittals, and other communications to the Administrator pursuant to this part shall be submitted in duplicate and addressed to the appropriate Regional Office of the Environmental Protection Agency.

(b) The Regional Offices are as follows:

(1) Connecticut, Maine, Massachusetts, New Hampshire, Rhode Island, and Vermont. EPA Region 1, John F. Kennedy Federal Building, One Congress Street, Boston, MA 02203.

(2) New York, New Jersey, Puerto Rico, and Virgin Islands. EPA Region 2, 290 Broadway, New York, NY 10007–1866.

(3) Delaware, District of Columbia, Pennsylvania, Maryland, Virginia, and West Virginia. EPA Region 3, 841 Chestnut Building, Philadelphia, PA 19107.

(4) Alabama, Florida, Georgia, Kentucky, Mississippi, North Carolina, South Carolina, and Tennessee. EPA Region 4, 345 Courtland Street, N.E., Atlanta, GA 30365.

(5) Illinois, Indiana, Michigan, Minnesota, Ohio, and Wisconsin. EPA Region 5, 77 West Jackson Boulevard, Chicago, IL 60604–3507.

(6) Arkansas, Louisiana, New Mexico, Oklahoma, and Texas. EPA Region 6, Fountain Place, 1445 Ross Avenue, Suite 1200, Dallas, TX 75202–2733.

(7) Iowa, Kansas, Missouri, and Nebraska. EPA Region 7, 726 Minnesota Avenue, Kansas City, KS 66101.

(8) Colorado, Montana, North Dakota, South Dakota, Utah, and Wyoming. EPA Region 8, 999 18th Street, Suite 500, Denver, CO 80202–2466.

(9) Arizona, California, Hawaii, Nevada, American Samoa, and Guam. EPA, Region 9, 75 Hawthorne Street, San Francisco, CA 94105.

(10) Alaska, Idaho, Oregon, and Washington. EPA, Region 10, 1200 6th Avenue, Seattle, WA 98101.

[61 FR 16061, Apr. 11, 1996]

§ 52.17 Severability of provisions.

The provisions promulgated in this part and the various applications thereof are distinct and severable. If any provision of this part or the application thereof to any person or circumstances is held invalid, such invalidity shall not affect other provisions or application of such provision to other persons or circumstances which can be given effect without the invalid provision or application.

[37 FR 19808, Sept. 22, 1972]

§ 52.18 Abbreviations.

Abbreviations used in this part shall be those set forth in part 60 of this chapter.

[38 FR 12698, May 14, 1973]

§ 52.20 Attainment dates for national standards.

Each subpart contains a section which specifies the latest dates by which national standards are to be attained in each region in the State. An attainment date which only refers to a month and a year (such as July 1975) shall be construed to mean the last day of the month in question. However, the specification of attainment dates for national standards does not relieve any State from the provisions of subpart N of this chapter which require all sources and categories of sources to comply with applicable requirements of the plan—

(a) As expeditiously as practicable where the requirement is part of a control strategy designed to attain a primary standard, and

(b) Within a reasonable time where the requirement is part of a control strategy designed to attain a secondary standard.

[37 FR 19808, Sept. 22, 1972, as amended at 39 FR 34535, Sept. 26, 1974; 51 FR 40676, Nov. 7, 1986]

§ 52.21 Prevention of significant deterioration of air quality.

(a)(1) *Plan disapproval.* The provisions of this section are applicable to any State implementation plan which has been disapproved with respect to prevention of significant deterioration of air quality in any portion of any State where the existing air quality is better

than the national ambient air quality standards. Specific disapprovals are listed where applicable, in subparts B through DDD of this part. The provisions of this section have been incorporated by reference into the applicable implementation plans for various States, as provided in subparts B through DDD of this part. Where this section is so incorporated, the provisions shall also be applicable to all lands owned by the Federal Goverment and Indian Reservations located in such State. No disapproval with respect to a State's failure to prevent significant deterioration of air quality shall invalidate or otherwise affect the obligations of States, emission sources, or other persons with respect to all portions of plans approved or promulgated under this part.

(2) *Applicability procedures.* (i) The requirements of this section apply to the construction of any new major stationary source (as defined in paragraph (b)(1) of this section) or any project at an existing major stationary source in an area designated as attainment or unclassifiable under sections 107(d)(1)(A)(ii) or (iii) of the Act.

(ii) The requirements of paragraphs (j) through (r) of this section apply to the construction of any new major stationary source or the major modification of any existing major stationary source, except as this section otherwise provides.

(iii) No new major stationary source or major modification to which the requirements of paragraphs (j) through (r)(5) of this section apply shall begin actual construction without a permit that states that the major stationary source or major modification will meet those requirements. The Administrator has authority to issue any such permit.

(iv) The requirements of the program will be applied in accordance with the principles set out in paragraphs (a)(2)(iv)(*a*) through (*f*) of this section.

(*a*) Except as otherwise provided in paragraphs (a)(2)(v) and (vi) of this section, and consistent with the definition of major modification contained in paragraph (b)(2) of this section, a project is a major modification for a regulated NSR pollutant if it causes two types of emissions increases—a significant emissions increase (as defined in paragraph (b)(40) of this section), and a significant net emissions increase (as defined in paragraphs (b)(3) and (b)(23) of this section). The project is not a major modification if it does not cause a significant emissions increase. If the project causes a significant emissions increase, then the project is a major modification only if it also results in a significant net emissions increase.

(*b*) The procedure for calculating (before beginning actual construction) whether a significant emissions increase (*i.e.*, the first step of the process) will occur depends upon the type of emissions units being modified, according to paragraphs (a)(2)(iv)(*c*) through (*f*) of this section. The procedure for calculating (before beginning actual construction) whether a significant net emissions increase will occur at the major stationary source (*i.e.*, the second step of the process) is contained in the definition in paragraph (b)(3) of this section. Regardless of any such preconstruction projections, a major modification results if the project causes a significant emissions increase and a significant net emissions increase.

(*c*) *Actual-to-projected-actual applicability test for projects that only involve existing emissions units.* A significant emissions increase of a regulated NSR pollutant is projected to occur if the sum of the difference between the projected actual emissions (as defined in paragraph (b)(41) of this section) and the baseline actual emissions (as defined in paragraphs (b)(48)(i) and (ii) of this section), for each existing emissions unit, equals or exceeds the significant amount for that pollutant (as defined in paragraph (b)(23) of this section).

(*d*) *Actual-to-potential test for projects that only involve construction of a new emissions unit(s).* A significant emissions increase of a regulated NSR pollutant is projected to occur if the sum of the difference between the potential to emit (as defined in paragraph (b)(4) of this section) from each new emissions unit following completion of the project and the baseline actual emissions (as defined in paragraph (b)(48)(iii) of this section) of these units before the project equals or exceeds the

significant amount for that pollutant (as defined in paragraph (b)(23) of this section).

(*e*) *Emission test for projects that involve Clean Units.* For a project that will be constructed and operated at a Clean Unit without causing the emissions unit to lose its Clean Unit designation, no emissions increase is deemed to occur.

(*f*) *Hybrid test for projects that involve multiple types of emissions units.* A significant emissions increase of a regulated NSR pollutant is projected to occur if the sum of the emissions increases for each emissions unit, using the method specified in paragraphs (a)(2)(iv)(*c*) through (*e*) of this section as applicable with respect to each emissions unit, for each type of emissions unit equals or exceeds the significant amount for that pollutant (as defined in paragraph (b)(23) of this section). For example, if a project involves both an existing emissions unit and a Clean Unit, the projected increase is determined by summing the values determined using the method specified in paragraph (a)(2)(iv)(*c*) of this section for the existing unit and using the method specified in paragraph (a)(2)(iv)(*e*) of this section for the Clean Unit.

(v) For any major stationary source for a PAL for a regulated NSR pollutant, the major stationary source shall comply with the requirements under paragraph (aa) of this section.

(vi) An owner or operator undertaking a PCP (as defined in paragraph (b)(32) of this section) shall comply with the requirements under paragraph (z) of this section.

(b) *Definitions.* For the purposes of this section:

(1)(i) *Major stationary source* means:

(*a*) Any of the following stationary sources of air pollutants which emits, or has the potential to emit, 100 tons per year or more of any regulated NSR pollutant: Fossil fuel-fired steam electric plants of more than 250 million British thermal units per hour heat input, coal cleaning plants (with thermal dryers), kraft pulp mills, portland cement plants, primary zinc smelters, iron and steel mill plants, primary aluminum ore reduction plants, primary copper smelters, municipal incinerators capable of charging more than 250 tons of refuse per day, hydrofluoric, sulfuric, and nitric acid plants, petroleum refineries, lime plants, phosphate rock processing plants, coke oven batteries, sulfur recovery plants, carbon black plants (furnace process), primary lead smelters, fuel conversion plants, sintering plants, secondary metal production plants, chemical process plants, fossil fuel boilers (or combinations thereof) totaling more than 250 million British thermal units per hour heat input, petroleum storage and transfer units with a total storage capacity exceeding 300,000 barrels, taconite ore processing plants, glass fiber processing plants, and charcoal production plants;

(b) Notwithstanding the stationary source size specified in paragraph (b)(1)(i) of this section, any stationary source which emits, or has the potential to emit, 250 tons per year or more of a regulated NSR pollutant; or

(c) Any physical change that would occur at a stationary source not otherwise qualifying under paragraph (b)(1) of this section, as a major stationary source, if the changes would constitute a major stationary source by itself.

(ii) A major stationary source that is major for volatile organic compounds shall be considered major for ozone.

(iii) The fugitive emissions of a stationary source shall not be included in determining for any of the purposes of this section whether it is a major stationary source, unless the source belongs to one of the following categories of stationary sources:

(*a*) Coal cleaning plants (with thermal dryers);

(*b*) Kraft pulp mills;

(*c*) Portland cement plants;

(*d*) Primary zinc smelters;

(*e*) Iron and steel mills;

(*f*) Primary aluminum ore reduction plants;

(*g*) Primary copper smelters;

(*h*) Municipal incinerators capable of charging more than 250 tons of refuse per day;

(*i*) Hydrofluoric, sulfuric, or nitric acid plants;

(*j*) Petroleum refineries;

(*k*) Lime plants;

(*l*) Phosphate rock processing plants;

(*m*) Coke oven batteries;

(*n*) Sulfur recovery plants;

(*o*) Carbon black plants (furnace process);

(*p*) Primary lead smelters;

(*q*) Fuel conversion plants;

(*r*) Sintering plants;

(*s*) Secondary metal production plants;

(*t*) Chemical process plants;

(*u*) Fossil-fuel boilers (or combination thereof) totaling more than 250 million British thermal units per hour heat input;

(*v*) Petroleum storage and transfer units with a total storage capacity exceeding 300,000 barrels;

(*w*) Taconite ore processing plants;

(*x*) Glass fiber processing plants;

(*y*) Charcoal production plants;

(*z*) Fossil fuel-fired steam electric plants of more that 250 million British thermal units per hour heat input, and

(*aa*) Any other stationary source category which, as of August 7, 1980, is being regulated under section 111 or 112 of the Act.

(2)(i) *Major modification* means any physical change in or change in the method of operation of a major stationary source that would result in: a significant emissions increase (as defined in paragraph (b)(40) of this section) of a regulated NSR pollutant (as defined in paragraph (b)(50) of this section); and a significant net emissions increase of that pollutant from the major stationary source.

(ii) Any significant emissions increase (as defined in paragraph (b)(40) of this section) from any emissions units or net emissions increase (as defined in paragraph (b)(3) of this section) at a major stationary source that is significant for volatile organic compounds shall be considered significant for ozone.

(iii) A physical change or change in the method of operation shall not include:

(*a*) Routine maintenance, repair and replacement. Routine maintenance, repair and replacement shall include, but not be limited to, any activity(s) that meets the requirements of the equipment replacement provisions contained in paragraph (cc) of this section;

NOTE TO PARAGRAPH (b)(2)(iii)(a): By court order on December 24, 2003, the second sentence of this paragraph (b)(2)(iii)(a) is stayed indefinitely. The stayed provisions will become effective immediately if the court terminates the stay. At that time, EPA will publish a document in the FEDERAL REGISTER advising the public of the termination of the stay.

(b) Use of an alternative fuel or raw material by reason of an order under sections 2 (a) and (b) of the Energy Supply and Environmental Coordination Act of 1974 (or any superseding legislation) or by reason of a natural gas curtailment plant pursuant to the Federal Power Act;

(c) Use of an alternative fuel by reason of an order or rule under section 125 of the Act;

(d) Use of an alternative fuel at a steam generating unit to the extent that the fuel is generated from municipal solid waste;

(e) Use of an alternative fuel or raw material by a stationary source which:

(1) The source was capable of accommodating before January 6, 1975, unless such change would be prohibited under any federally enforceable permit condition which was established after January 6, 1975 pursuant to 40 CFR 52.21 or under regulations approved pursuant to 40 CFR subpart I or 40 CFR 51.166; or

(2) The source is approved to use under any permit issued under 40 CFR 52.21 or under regulations approved pursuant to 40 CFR 51.166;

(f) An increase in the hours of operation or in the production rate, unless such change would be prohibited under any federally enforceable permit condition which was established after January 6, 1975, pursuant to 40 CFR 52.21 or under regulations approved pursuant to 40 CFR subpart I or 40 CFR 51.166.

(g) Any change in ownership at a stationary source.

(*h*) The addition, replacement, or use of a PCP, as defined in paragraph (b)(32) of this section, at an existing emissions unit meeting the requirements of paragraph (z) of this section. A replacement control technology must provide more effective emission control than that of the replaced control technology to qualify for this exclusion.

(*1*) When the Administrator has reason to believe that the pollution control project would result in a significant net increase in representative actual annual emissions of any criteria pollutant over levels used for that source in the most recent air quality impact analysis in the area conducted for the purpose of title I, if any, and

(*2*) The Administrator determines that the increase will cause or contribute to a violation of any national ambient air quality standard or PSD increment, or visibility limitation.

(*i*) The installation, operation, cessation, or removal of a temporary clean coal technology demonstration project, provided that the project complies with:

(*1*) The State implementation plan for the State in which the project is located, and

(*2*) Other requirements necessary to attain and maintain the national ambient air quality standards during the project and after it is terminated.

(*j*) The installation or operation of a permanent clean coal technology demonstration project that constitutes repowering, provided that the project does not result in an increase in the potential to emit of any regulated pollutant emitted by the unit. This exemption shall apply on a pollutant-by-pollutant basis.

(*k*) The reactivation of a very clean coal-fired electric utility steam generating unit.

(iv) This definition shall not apply with respect to a particular regulated NSR pollutant when the major stationary source is complying with the requirements under paragraph (aa) of this section for a PAL for that pollutant. Instead, the definition at paragraph (aa)(2)(viii) of this section shall apply.

(3)(i) *Net emissions increase* means, with respect to any regulated NSR pollutant emitted by a major stationary source, the amount by which the sum of the following exceeds zero:

(*a*) The increase in emissions from a particular physical change or change in the method of operation at a stationary source as calculated pursuant to paragraph (a)(2)(iv) of this section; and

(*b*) Any other increases and decreases in actual emissions at the major stationary source that are contemporaneous with the particular change and are otherwise creditable. Baseline actual emissions for calculating increases and decreases under this paragraph (b)(3)(i)(*b*) shall be determined as provided in paragraph (b)(48) of this section, except that paragraphs (b)(48)(i)(*c*) and (b)(48)(ii)(*d*) of this section shall not apply.

(ii) An increase or decrease in actual emissions is contemporaneous with the increase from the particular change only if it occurs between:

(*a*) The date five years before construction on the particular change commences; and

(*b*) The date that the increase from the particular change occurs.

(iii) An increase or decrease in actual emissions is creditable only if:

(*a*) The Administrator or other reviewing authority has not relied on it in issuing a permit for the source under this section, which permit is in effect when the increase in actual emissions from the particular change occurs; and

(*b*) The increase or decrease in emissions did not occur at a Clean Unit except as provided in paragraphs (x)(8) and (y)(10) of this section.

(iv) An increase or decrease in actual emissions of sulfur dioxide, particulate matter, or nitrogen oxides that occurs before the applicable minor source baseline date is creditable only if it is required to be considered in calculating the amount of maximum allowable increases remaining available.

(v) An increase in actual emissions is creditable only to the extent that the new level of actual emissions exceeds the old level.

(vi) A decrease in actual emissions is creditable only to the extent that:

(*a*) The old level of actual emissions or the old level of allowable emissions, whichever is lower, exceeds the new level of actual emissions;

(*b*) It is enforceable as a practical matter at and after the time that actual construction on the particular change begins.

(*c*) It has approximately the same qualitative significance for public health and welfare as that attributed

to the increase from the particular change; and

(*d*) The decrease in actual emissions did not result from the installation of add-on control technology or application of pollution prevention practices that were relied on in designating an emissions unit as a Clean Unit under paragraph (y) of this section or under regulations approved pursuant to § 51.165(d) or to § 51.166(u) of this chapter. That is, once an emissions unit has been designated as a Clean Unit, the owner or operator cannot later use the emissions reduction from the air pollution control measures that the designation is based on in calculating the net emissions increase for another emissions unit (*i.e.,* must not use that reduction in a "netting analysis" for another emissions unit). However, any new emission reductions that were not relied upon in a PCP excluded pursuant to paragraph (z) of this section or for a Clean Unit designation are creditable to the extent they meet the requirements in paragraph (z)(6)(iv) of this section for the PCP and paragraphs (x)(8) or (y)(10) of this section for a Clean Unit.

(vii) [Reserved]

(viii) An increase that results from a physical change at a source occurs when the emissions unit on which construction occurred becomes operational and begins to emit a particular pollutant. Any replacement unit that requires shakedown becomes operational only after a reasonable shakedown period, not to exceed 180 days.

(ix) Paragraph (b)(21)(ii) of this section shall not apply for determining creditable increases and decreases.

(4) *Potential to emit* means the maximum capacity of a stationary source to emit a pollutant under its physical and operational design. Any physical or operational limitation on the capacity of the source to emit a pollutant, including air pollution control equipment and restrictions on hours of operation or on the type or amount of material combusted, stored, or processed, shall be treated as part of its design if the limitation or the effect it would have on emissions is federally enforceable. Secondary emissions do not count in determining the potential to emit of a stationary source.

(5) *Stationary source* means any building, structure, facility, or installation which emits or may emit a regulated NSR pollutant.

(6) *Building, structure, facility, or installation* means all of the pollutant-emitting activities which belong to the same industrial grouping, are located on one or more contiguous or adjacent properties, and are under the control of the same person (or persons under common control) except the activities of any vessel. Pollutant-emitting activities shall be considered as part of the same industrial grouping if they belong to the same "Major Group" (i.e., which have the same first two digit code) as described in the *Standard Industrial Classification Manual, 1972,* as amended by the 1977 Supplement (U. S. Government Printing Office stock numbers 4101–0066 and 003–005–00176–0, respectively).

(7) *Emissions unit* means any part of a stationary source that emits or would have the potential to emit any regulated NSR pollutant and includes an electric utility steam generating unit as defined in paragraph (b)(31) of this section. For purposes of this section, there are two types of emissions units as described in paragraphs (b)(7)(i) and (ii) of this section.

(i) A new emissions unit is any emissions unit that is (or will be) newly constructed and that has existed for less than 2 years from the date such emissions unit first operated.

(ii) An existing emissions unit is any emissions unit that does not meet the requirements in paragraph (b)(7)(i) of this section. A replacement unit, as defined in paragraph (b)(33) of this section, is an existing emissions unit.

(8) *Construction* means any physical change or change in the method of operation (including fabrication, erection, installation, demolition, or modification of an emissions unit) that would result in a change in emissions.

(9) *Commence* as applied to construction of a major stationary source or major modification means that the owner or operator has all necessary preconstruction approvals or permits and either has:

(i) Begun, or caused to begin, a continuous program of actual on-site construction of the source, to be completed within a reasonable time; or

(ii) Entered into binding agreements or contractual obligations, which cannot be cancelled or modified without substantial loss to the owner or operator, to undertake a program of actual construction of the source to be completed within a reasonable time.

(10) *Necessary preconstruction approvals or permits* means those permits or approvals required under Federal air quality control laws and regulations and those air quality control laws and regulations which are part of the applicable State Implementation Plan.

(11) *Begin actual construction* means, in general, initiation of physical on-site construction activities on an emissions unit which are of a permanent nature. Such activities include, but are not limited to, installation of building supports and foundations, laying underground pipework and construction of permanent storage structures. With respect to a change in method of operations, this term refers to those on-site activites other than preparatory activities which mark the initiation of the change.

(12) *Best available control technology* means an emissions limitation (including a visible emission standard) based on the maximum degree of reduction for each pollutant subject to regulation under Act which would be emitted from any proposed major stationary source or major modification which the Administrator, on a case-by-case basis, taking into account energy, environmental, and economic impacts and other costs, determines is achievable for such source or modification through application of production processes or available methods, systems, and techniques, including fuel cleaning or treatment or innovative fuel combustion techniques for control of such pollutant. In no event shall application of best available control technology result in emissions of any pollutant which would exceed the emissions allowed by any applicable standard under 40 CFR parts 60 and 61. If the Administrator determines that technological or economic limitations on the application of measurement methodology to a particular emissions unit would make the imposition of an emissions standard infeasible, a design, equipment, work practice, operational standard, or combination thereof, may be prescribed instead to satisfy the requirement for the application of best available control technology. Such standard shall, to the degree possible, set forth the emissions reduction achievable by implementation of such design, equipment, work practice or operation, and shall provide for compliance by means which achieve equivalent results.

(13)(i) *Baseline concentration* means that ambient concentration level that exists in the baseline area at the time of the applicable minor source baseline date. A baseline concentration is determined for each pollutant for which a minor source baseline date is established and shall include:

(*a*) The actual emissions, as defined in paragraph (b)(21) of this section, representative of sources in existence on the applicable minor source baseline date, except as provided in paragraph (b)(13)(ii) of this section; and

(*b*) The allowable emissions of major stationary sources that commenced construction before the major source baseline date, but were not in operation by the applicable minor source baseline date.

(ii) The following will not be included in the baseline concentration and will affect the applicable maximum allowable increase(s):

(*a*) Actual emissions, as defined in paragraph (b)(21) of this section, from any major stationary source on which construction commenced after the major source baseline date; and

(*b*) Actual emissions increases and decreases, as defined in paragraph (b)(21) of this section, at any stationary source occurring after the minor source baseline date.

(14)(i) *Major source baseline date* means:

(*a*) In the case of particulate matter and sulfur dioxide, January 6, 1975, and

(*b*) In the case of nitrogen dioxide, February 8, 1988.

(ii) "Minor source baseline date" means the earliest date after the trigger date on which a major stationary source or a major modification subject

to 40 CFR 52.21 or to regulations approved pursuant to 40 CFR 51.166 submits a complete application under the relevant regulations. The trigger date is:

(*a*) In the case of particulate matter and sulfur dioxide, August 7, 1977, and

(*b*) In the case of nitrogen dioxide, February 8, 1988.

(iii) The baseline date is established for each pollutant for which increments or other equivalent measures have been established if:

(*a*) The area in which the proposed source or modification would construct is designated as attainment or unclassifiable under section 107(d)(i)(D) or (E) of the Act for the pollutant on the date of its complete application under 40 CFR 52.21; and

(*b*) In the case of a major stationary source, the pollutant would be emitted in significant amounts, or, in the case of a major modification, there would be a significant net emissions increase of the pollutant.

(iv) Any minor source baseline date established originally for the TSP increments shall remain in effect and shall apply for purposes of determining the amount of available PM–10 increments, except that the Administrator shall rescind a minor source baseline date where it can be shown, to the satisfaction of the Administrator, that the emissions increase from the major stationary source, or net emissions increase from the major modification, responsible for triggering that date did not result in a significant amount of PM–10 emissions.

(15)(i) *Baseline area* means any intrastate area (and every part thereof) designated as attainment or unclassifiable under section 107(d)(1) (D) or (E) of the Act in which the major source or major modification establishing the minor source baseline date would construct or would have an air quality impact equal to or greater than 1 $\mu g/m^3$ (annual average) of the pollutant for which the minor source baseline date is established.

(ii) Area redesignations under section 107(d)(1) (D) or (E) of the Act cannot intersect or be smaller than the area of impact of any major stationary source or major modification which:

(*a*) Establishes a minor source baseline date; or

(*b*) Is subject to 40 CFR 52.21 and would be constructed in the same state as the state proposing the redesignation.

(iii) Any baseline area established originally for the TSP increments shall remain in effect and shall apply for purposes of determining the amount of available PM–10 increments, except that such baseline area shall not remain in effect if the Administrator rescinds the corresponding minor source baseline date in accordance with paragraph (b)(14)(iv) of this section.

(16) *Allowable emissions* means the emissions rate of a stationary source calculated using the maximum rated capacity of the source (unless the source is subject to federally enforceable limits which restrict the operating rate, or hours of operation, or both) and the most stringent of the following:

(i) The applicable standards as set forth in 40 CFR parts 60 and 61;

(ii) The applicable State Implementation Plan emissions limitation, including those with a future compliance date; or

(iii) The emissions rate specified as a federally enforceable permit condition, including those with a future compliance date.

(17) *Federally enforceable* means all limitations and conditions which are enforceable by the Administrator, including those requirements developed pursuant to 40 CFR parts 60 and 61, requirements within any applicable State implementation plan, any permit requirements established pursuant to 40 CFR 52.21 or under regulations approved pursuant to 40 CFR part 51, subpart I, including operating permits issued under an EPA-approved program that is incorporated into the State implementation plan and expressly requires adherence to any permit issued under such program.

(18) *Secondary emissions* means emissions which would occur as a result of the construction or operation of a major stationary source or major modification, but do not come from the major stationary source or major

modification itself. Secondary emissions include emissions from any offsite support facility which would not be constructed or increase its emissions except as a result of the construction or operation of the major stationary source or major modification. Secondary emissions do not include any emissions which come directly from a mobile source, such as emissions from the tailpipe of a motor vehicle, from a train, or from a vessel.

(i) Emissions from ships or trains coming to or from the new or modified stationary source; and

(ii) Emissions from any offsite support facility which would not otherwise be constructed or increase its emissions as a result of the construction or operation of the major stationary source or major modification.

(19) *Innovative control technology* means any system of air pollution control that has not been adequately demonstrated in practice, but would have a substantial likelihood of achieving greater continuous emissions reduction than any control system in current practice or of achieving at least comparable reductions at lower cost in terms of energy, economics, or nonair quality environmental impacts.

(20) *Fugitive emissions* means those emissions which could not reasonably pass through a stack, chimney, vent, or other functionally equivalent opening.

(21)(i) *Actual emissions* means the actual rate of emissions of a regulated NSR pollutant from an emissions unit, as determined in accordance with paragraphs (b)(21)(ii) through (iv) of this section, except that this definition shall not apply for calculating whether a significant emissions increase has occurred, or for establishing a PAL under paragraph (aa) of this section. Instead, paragraphs (b)(41) and (b)(48) of this section shall apply for those purposes.

(ii) In general, actual emissions as of a particular date shall equal the average rate, in tons per year, at which the unit actually emitted the pollutant during a consecutive 24-month period which precedes the particular date and which is representative of normal source operation. The Administrator shall allow the use of a different time period upon a determination that it is more representative of normal source operation. Actual emissions shall be calculated using the unit's actual operating hours, production rates, and types of materials processed, stored, or combusted during the selected time period.

(iii) The Administrator may presume that source-specific allowable emissions for the unit are equivalent to the actual emissions of the unit.

(iv) For any emissions unit that has not begun normal operations on the particular date, actual emissions shall equal the potential to emit of the unit on that date.

(22) *Complete* means, in reference to an application for a permit, that the application contains all of the information necessary for processing the application.

(23) (i) *Significant* means, in reference to a net emissions increase or the potential of a source to emit any of the following pollutants, a rate of emissions that would equal or exceed any of the following rates:

Pollutant and Emissions Rate

Carbon monoxide: 100 tons per year (tpy)
Nitrogen oxides: 40 tpy
Sulfur dioxide: 40 tpy
Particulate matter:
25 tpy of particulate matter emissions;
15 tpy of PM_{10} emissions
Ozone: 40 tpy of volatile organic compounds
Lead: 0.6 tpy
Fluorides: 3 tpy
Sulfuric acid mist: 7 tpy
Hydrogen sulfide (H_2S): 10 tpy
Total reduced sulfur (including H_2S): 10 tpy
Reduced sulfur compounds (including H_2S): 10 tpy
Municipal waste combustor organics (measured as total tetra- through octa-chlorinated dibenzo-p-dioxins and dibenzofurans): 3.2×10^{-6} megagrams per year (3.5×10^{-6} tons per year). Municipal waste combustor metals (measured as particulate matter): 14 megagrams per year (15 tons per year)
Municipal waste combustor acid gases (measured as sulfur dioxide and hydrogen chloride): 36 megagrams per year (40 tons per year)
Municipal solid waste landfills emissions (measured as nonmethane organic compounds): 45 megagrams per year (50 tons per year)

(ii) *Significant* means, in reference to a net emissions increase or the potential of a source to emit a regulated NSR pollutant that paragraph (b)(23)(i)

of this section, does not list, any emissions rate.

(iii) Notwithstanding paragraph (b)(23)(i) of this section, *significant* means any emissions rate or any net emissions increase associated with a major stationary source or major modification, which would construct within 10 kilometers of a Class I area, and have an impact on such area equal to or greater than 1 $\mu g/m^3$, (24-hour average).

(24) *Federal Land Manager* means, with respect to any lands in the United States, the Secretary of the department with authority over such lands.

(25) *High terrain* means any area having an elevation 900 feet or more above the base of the stack of a source.

(26) *Low terrain* means any area other than high terrain.

(27) *Indian Reservation* means any federally recognized reservation established by Treaty, Agreement, executive order, or act of Congress.

(28) *Indian Governing Body* means the governing body of any tribe, band, or group of Indians subject to the jurisdiction of the United States and recognized by the United States as possessing power of self government.

(29) *Adverse impact on visibility* means visibility impairment which interferes with the management, protection, preservation or enjoyment of the visitor's visual experience of the Federal Class I area. This determination must be made on a case-by-case basis taking into account the geographic extent, intensity, duration, frequency and time of visibility impairment, and how these factors correlate with (1) times of visitor use of the Federal Class I area, and (2) the frequency and timing of natural conditions that reduce visibility.

(30) *Volatile organic compounds (VOC)* is as defined in §51.100(s) of this chapter.

(31) *Electric utility steam generating unit* means any steam electric generating unit that is constructed for the purpose of supplying more than one-third of its potential electric output capacity and more than 25 MW electrical output to any utility power distribution system for sale. Any steam supplied to a steam distribution system for the purpose of providing steam to a steam-electric generator that would produce electrical energy for sale is also considered in determining the electrical energy output capacity of the affected facility.

(32) *Pollution control project (PCP)* means any activity, set of work practices or project (including pollution prevention as defined under paragraph (b)(39) of this section) undertaken at an existing emissions unit that reduces emissions of air pollutants from such unit. Such qualifying activities or projects can include the replacement or upgrade of an existing emissions control technology with a more effective unit. Other changes that may occur at the source are not considered part of the PCP if they are not necessary to reduce emissions through the PCP. Projects listed in paragraphs (b)(32)(i) through (vi) of this section are presumed to be environmentally beneficial pursuant to paragraph (z)(2)(i) of this section. Projects not listed in these paragraphs may qualify for a case-specific PCP exclusion pursuant to the requirements of paragraphs (z)(2) and (z)(5) of this section.

(i) Conventional or advanced flue gas desulfurization or sorbent injection for control of SO_2.

(ii) Electrostatic precipitators, baghouses, high efficiency multiclones, or scrubbers for control of particulate matter or other pollutants.

(iii) Flue gas recirculation, low-NO_X burners or combustors, selective non-catalytic reduction, selective catalytic reduction, low emission combustion (for IC engines), and oxidation/absorption catalyst for control of NO_X.

(iv) Regenerative thermal oxidizers, catalytic oxidizers, condensers, thermal incinerators, hydrocarbon combustion flares, biofiltration, absorbers and adsorbers, and floating roofs for storage vessels for control of volatile organic compounds or hazardous air pollutants. For the purpose of this section, "hydrocarbon combustion flare" means either a flare used to comply with an applicable NSPS or MACT standard (including uses of flares during startup, shutdown, or malfunction permitted under such a standard), or a flare that serves to control emissions of waste streams comprised predominately of hydrocarbons and containing

no more than 230 mg/dscm hydrogen sulfide.

(v) Activities or projects undertaken to accommodate switching (or partially switching) to an inherently less polluting fuel, to be limited to the following fuel switches:

(*a*) Switching from a heavier grade of fuel oil to a lighter fuel oil, or any grade of oil to 0.05 percent sulfur diesel (*i.e.*, from a higher sulfur content #2 fuel or from #6 fuel, to CA 0.05 percent sulfur #2 diesel);

(*b*) Switching from coal, oil, or any solid fuel to natural gas, propane, or gasified coal;

(*c*) Switching from coal to wood, excluding construction or demolition waste, chemical or pesticide treated wood, and other forms of "unclean" wood;

(*d*) Switching from coal to #2 fuel oil (0.5 percent maximum sulfur content); and

(*e*) Switching from high sulfur coal to low sulfur coal (maximum 1.2 percent sulfur content).

(vi) Activities or projects undertaken to accommodate switching from the use of one ozone depleting substance (ODS) to the use of a substance with a lower or zero ozone depletion potential (ODP,) including changes to equipment needed to accommodate the activity or project, that meet the requirements of paragraphs (b)(32)(vi)(*a*) and (*b*) of this section.

(*a*) The productive capacity of the equipment is not increased as a result of the activity or project.

(*b*) The projected usage of the new substance is lower, on an ODP-weighted basis, than the baseline usage of the replaced ODS. To make this determination, follow the procedure in paragraphs (b)(32)(vi)(*b*)(*1*) through (*4*) of this section.

(*1*) Determine the ODP of the substances by consulting 40 CFR part 82, subpart A, appendices A and B.

(*2*) Calculate the replaced ODP-weighted amount by multiplying the baseline actual usage (using the annualized average of any 24 consecutive months of usage within the past 10 years) by the ODP of the replaced ODS.

(*3*) Calculate the projected ODP-weighted amount by multiplying the projected actual usage of the new substance by its ODP.

(*4*) If the value calculated in paragraph (b)(32)(vi)(*b*)(*2*) of this section is more than the value calculated in paragraph (b)(32)(vi)(*b*)(*3*) of this section, then the projected use of the new substance is lower, on an ODP-weighted basis, than the baseline usage of the replaced ODS.

(33) *Replacement unit* means an emissions unit for which all the criteria listed in paragraphs (b)(33)(i) through (iv) of this section are met. No creditable emission reductions shall be generated from shutting down the existing emissions unit that is replaced.

(i) The emissions unit is a reconstructed unit within the meaning of §60.15(b)(1) of this chapter, or the emissions unit completely takes the place of an existing emissions unit.

(ii) The emissions unit is identical to or functionally equivalent to the replaced emissions unit.

(iii) The replacement does not alter the basic design parameters (as discussed in paragraph (cc)(2) of this section) of the process unit.

(iv) The replaced emissions unit is permanently removed from the major stationary source, otherwise permanently disabled, or permanently barred from operation by a permit that is enforceable as a practical matter. If the replaced emissions unit is brought back into operation, it shall constitute a new emissions unit.

(34) *Clean coal technology* means any technology, including technologies applied at the precombustion, combustion, or post combustion stage, at a new or existing facility which will achieve significant reductions in air emissions of sulfur dioxide or oxides of nitrogen associated with the utilization of coal in the generation of electricity, or process steam which was not in widespread use as of November 15, 1990.

(35) *Clean coal technology demonstration project* means a project using funds appropriated under the heading "Department of Energy-Clean Coal Technology", up to a total amount of $2,500,000,000 for commercial demonstration of clean coal technology, or

similar projects funded through appropriations for the Environmental Protection Agency. The Federal contribution for a qualifying project shall be at least 20 percent of the total cost of the demonstration project.

(36) *Temporary clean coal technology demonstration project* means a clean coal technology demonstration project that is operated for a period of 5 years or less, and which complies with the State implementation plans for the State in which the project is located and other requirements necessary to attain and maintain the national ambient air quality standards during the project and after it is terminated.

(37) (i) *Repowering* means replacement of an existing coal-fired boiler with one of the following clean coal technologies: atmospheric or pressurized fluidized bed combustion, integrated gasification combined cycle, magnetohydrodynamics, direct and indirect coal-fired turbines, integrated gasification fuel cells, or as determined by the Administrator, in consultation with the Secretary of Energy, a derivative of one or more of these technologies, and any other technology capable of controlling multiple combustion emissions simultaneously with improved boiler or generation efficiency and with significantly greater waste reduction relative to the performance of technology in widespread commercial use as of November 15, 1990.

(ii) Repowering shall also include any oil and/or gas-fired unit which has been awarded clean coal technology demonstration funding as of January 1, 1991, by the Department of Energy.

(iii) The Administrator shall give expedited consideration to permit applications for any source that satisfies the requirements of this subsection and is granted an extension under section 409 of the Clean Air Act.

(38) *Reactivation of a very clean coal-fired electric utility steam generating unit* means any physical change or change in the method of operation associated with the commencement of commercial operations by a coal-fired utility unit after a period of discontinued operation where the unit:

(i) Has not been in operation for the two-year period prior to the enactment of the Clean Air Act Amendments of 1990, and the emissions from such unit continue to be carried in the permitting authority's emissions inventory at the time of enactment;

(ii) Was equipped prior to shut-down with a continuous system of emissions control that achieves a removal efficiency for sulfur dioxide of no less than 85 percent and a removal efficiency for particulates of no less than 98 percent;

(iii) Is equipped with low-NO_X burners prior to the time of commencement of operations following reactivation; and

(iv) Is otherwise in compliance with the requirements of the Clean Air Act.

(39) *Pollution prevention* means any activity that through process changes, product reformulation or redesign, or substitution of less polluting raw materials, eliminates or reduces the release of air pollutants (including fugitive emissions) and other pollutants to the environment prior to recycling, treatment, or disposal; it does not mean recycling (other than certain "in-process recycling" practices), energy recovery, treatment, or disposal.

(40) *Significant emissions increase* means, for a regulated NSR pollutant, an increase in emissions that is significant (as defined in paragraph (b)(23) of this section) for that pollutant.

(41)(i) *Projected actual emissions* means the maximum annual rate, in tons per year, at which an existing emissions unit is projected to emit a regulated NSR pollutant in any one of the 5 years (12-month period) following the date the unit resumes regular operation after the project, or in any one of the 10 years following that date, if the project involves increasing the emissions unit's design capacity or its potential to emit that regulated NSR pollutant and full utilization of the unit would result in a significant emissions increase or a significant net emissions increase at the major stationary source.

(ii) In determining the projected actual emissions under paragraph (b)(41)(i) of this section (before beginning actual construction), the owner or operator of the major stationary source:

(*a*) Shall consider all relevant information, including but not limited to,

historical operational data, the company's own representations, the company's expected business activity and the company's highest projections of business activity, the company's filings with the State or Federal regulatory authorities, and compliance plans under the approved State Implementation Plan; and

(*b*) Shall include fugitive emissions to the extent quantifiable and emissions associated with startups, shutdowns, and malfunctions; and

(*c*) Shall exclude, in calculating any increase in emissions that results from he particular project, that portion of the unit's emissions following the project that an existing unit could have accommodated during the consecutive 24-month period used to establish the baseline actual emissions under paragraph (b)(48) of this section and that are also unrelated to the particular project, including any increased utilization due to product demand growth; or

(*d*) In lieu of using the method set out in paragraphs (a)(41)(ii)(a) through (c) of this section, may elect to use the emissions unit's potential to emit, in tons per year, as defined under paragraph (b)(4) of this section.

(42) *Clean Unit* means any emissions unit that has been issued a major NSR permit that requires compliance with BACT or LAER, is complying with such BACT/LAER requirements, and qualifies as a Clean Unit pursuant to paragraph (x) of this section; or any emissions unit that has been designated by the Administrator as a Clean Unit, based on the criteria in paragraphs (y)(3)(i) through (iv) of this section; or any emissions unit that has been issued a major NSR permit that requires compliance with BACT or LAER, is complying with such BACT/LAER requirements, and qualifies as a Clean Unit pursuant to regulations approved into the State Implementation Plan in accordance with §51.165(c) or §51.166(u) of this chapter; or any emissions unit that has been designated by the reviewing authority as a Clean Unit in accordance with regulations approved into the plan to carry out §51.165(d) or §51.166(u) of this chapter.

(43) *Prevention of Significant Deterioration (PSD) program* means the EPA-implemented major source preconstruction permit programs under this section or a major source preconstruction permit program that has been approved by the Administrator and incorporated into the State Implementation Plan pursuant to §51.166 of this chapter to implement the requirements of that section. Any permit issued under such a program is a major NSR permit.

(44) *Continuous emissions monitoring system (CEMS)* means all of the equipment that may be required to meet the data acquisition and availability requirements of this section, to sample, condition (if applicable), analyze, and provide a record of emissions on a continuous basis.

(45) *Predictive emissions monitoring system (PEMS)* means all of the equipment necessary to monitor process and control device operational parameters (for example, control device secondary voltages and electric currents) and other information (for example, gas flow rate, O_2 or CO_2 concentrations), and calculate and record the mass emissions rate (for example, lb/hr) on a continuous basis.

(46) *Continuous parameter monitoring system (CPMS)* means all of the equipment necessary to meet the data acquisition and availability requirements of this section, to monitor process and control device operational parameters (for example, control device secondary voltages and electric currents) and other information (for example, gas flow rate, O_2 or CO_2 concentrations), and to record average operational parameter value(s) on a continuous basis.

(47) *Continuous emissions rate monitoring system (CERMS)* means the total equipment required for the determination and recording of the pollutant mass emissions rate (in terms of mass per unit of time).

(48) *Baseline actual emissions* means the rate of emissions, in tons per year, of a regulated NSR pollutant, as determined in accordance with paragraphs (b)(48)(i) through (iv) of this section.

(i) For any existing electric utility steam generating unit, baseline actual emissions means the average rate, in tons per year, at which the unit actually emitted the pollutant during any consecutive 24-month period selected

by the owner or operator within the 5-year period immediately preceding when the owner or operator begins actual construction of the project. The Administrator shall allow the use of a different time period upon a determination that it is more representative of normal source operation.

(*a*) The average rate shall include fugitive emissions to the extent quantifiable, and emissions associated with startups, shutdowns, and malfunctions.

(*b*) The average rate shall be adjusted downward to exclude any non-compliant emissions that occurred while the source was operating above any emission limitation that was legally enforceable during the consecutive 24-month period.

(*c*) For a regulated NSR pollutant, when a project involves multiple emissions units, only one consecutive 24-month period must be used to determine the baseline actual emissions for the emissions units being changed. A different consecutive 24-month period can be used For each regulated NSR pollutant.

(*d*) The average rate shall not be based on any consecutive 24-month period for which there is inadequate information for determining annual emissions, in tons per year, and for adjusting this amount if required by paragraph (b)(48)(i)(*b*) of this section.

(ii) For an existing emissions unit (other than an electric utility steam generating unit), baseline actual emissions means the average rate, in tons per year, at which the emissions unit actually emitted the pollutant during any consecutive 24-month period selected by the owner or operator within the 10-year period immediately preceding either the date the owner or operator begins actual construction of the project, or the date a complete permit application is received by the Administrator for a permit required under this section or by the reviewing authority for a permit required by a plan, whichever is earlier, except that the 10-year period shall not include any period earlier than November 15, 1990.

(*a*) The average rate shall include fugitive emissions to the extent quantifiable, and emissions associated with startups, shutdowns, and malfunctions.

(*b*) The average rate shall be adjusted downward to exclude any non-compliant emissions that occurred while the source was operating above an emission limitation that was legally enforceable during the consecutive 24-month period.

(*c*) The average rate shall be adjusted downward to exclude any emissions that would have exceeded an emission limitation with which the major stationary source must currently comply, had such major stationary source been required to comply with such limitations during the consecutive 24-month period. However, if an emission limitation is part of a maximum achievable control technology standard that the Administrator proposed or promulgated under part 63 of this chapter, the baseline actual emissions need only be adjusted if the State has taken credit for such emissions reductions in an attainment demonstration or maintenance plan consistent with the requirements of §51.165(a)(3)(ii)(G) of this chapter.

(*d*) For a regulated NSR pollutant, when a project involves multiple emissions units, only one consecutive 24-month period must be used to determine the baseline actual emissions for all the emissions units being changed. A different consecutive 24-month period can be used For each regulated NSR pollutant.

(*e*) The average rate shall not be based on any consecutive 24-month period for which there is inadequate information for determining annual emissions, in tons per year, and for adjusting this amount if required by paragraphs (b)(48)(ii)(*b*) and (*c*) of this section.

(iii) For a new emissions unit, the baseline actual emissions for purposes of determining the emissions increase that will result from the initial construction and operation of such unit shall equal zero; and thereafter, for all other purposes, shall equal the unit's potential to emit.

(iv) For a PAL for a stationary source, the baseline actual emissions shall be calculated for existing electric utility steam generating units in accordance with the procedures contained in paragraph (b)(48)(i) of this section, for other existing emissions

units in accordance with the procedures contained in paragraph (b)(48)(ii) of this section, and for a new emissions unit in accordance with the procedures contained in paragraph (b)(48)(iii) of this section.

(49) [Reserved]

(50) *Regulated NSR pollutant,* for purposes of this section, means the following:

(i) Any pollutant for which a national ambient air quality standard has been promulgated and any constituents or precursors for such pollutants identified by the Administrator (*e.g.,* volatile organic compounds are precursors for ozone);

(ii) Any pollutant that is subject to any standard promulgated under section 111 of the Act;

(iii) Any Class I or II substance subject to a standard promulgated under or established by title VI of the Act; or

(iv) Any pollutant that otherwise is subject to regulation under the Act; except that any or all hazardous air pollutants either listed in section 112 of the Act or added to the list pursuant to section 112(b)(2) of the Act, which have not been delisted pursuant to section 112(b)(3) of the Act, are not regulated NSR pollutants unless the listed hazardous air pollutant is also regulated as a constituent or precursor of a general pollutant listed under section 108 of the Act.

(51) *Reviewing authority* means the State air pollution control agency, local agency, other State agency, Indian tribe, or other agency authorized by the Administrator to carry out a permit program under §51.165 and §51.166 of this chapter, or the Administrator in the case of EPA-implemented permit programs under this section.

(52) *Project* means a physical change in, or change in the method of operation of, an existing major stationary source.

(53) *Lowest achievable emission rate (LAER)* is as defined in §51.165(a)(1)(xiii) of this chapter.

(54) *Reasonably available control technology (RACT)* is as defined in §51.100(o) of this chapter.

(55)(i) In general, *process unit* means any collection of structures and/or equipment that processes, assembles, applies, blends, or otherwise uses material inputs to produce or store an intermediate or a completed product. A single stationary source may contain more than one process unit, and a process unit may contain more than one emissions unit.

(ii) Pollution control equipment is not part of the process unit, unless it serves a dual function as both process and control equipment. Administrative and warehousing facilities are not part of the process unit.

(iii) For replacement cost purposes, components shared between two or more process units are proportionately allocated based on capacity.

(iv) The following list identifies the process units at specific categories of stationary sources.

(*a*) For a steam electric generating facility, the process unit consists of those portions of the plant that contribute directly to the production of electricity. For example, at a pulverized coal-fired facility, the process unit would generally be the combination of those systems from the coal receiving equipment through the emission stack (excluding post-combustion pollution controls), including the coal handling equipment, pulverizers or coal crushers, feedwater heaters, ash handling, boiler, burners, turbine-generator set, condenser, cooling tower, water treatment system, air preheaters, and operating control systems. Each separate generating unit is a separate process unit.

(*b*) For a petroleum refinery, there are several categories of process units: those that separate and/or distill petroleum feedstocks; those that change molecular structures; petroleum treating processes; auxiliary facilities, such as steam generators and hydrogen production units; and those that load, unload, blend or store intermediate or completed products.

(*c*) For an incinerator, the process unit would consist of components from the feed pit or refuse pit to the stack, including conveyors, combustion devices, heat exchangers and steam generators, quench tanks, and fans.

NOTE TO PARAGRAPH (b)(55): By a court order on December 24, 2003, this paragraph (b)(55) is stayed indefinitely. The stayed provisions will become effective immediately if the court terminates the stay. At that time,

EPA will publish a document in the FEDERAL REGISTER advising the public of the termination of the stay.

(56) *Functionally equivalent component* means a component that serves the same purpose as the replaced component.

NOTE TO PARAGRAPH (b)(56): By a court order on December 24, 2003, this paragraph (b)(56) is stayed indefinitely. The stayed provisions will become effective immediately if the court terminates the stay. At that time, EPA will publish a document in the FEDERAL REGISTER advising the public of the termination of the stay.

(57) *Fixed capital cost* means the capital needed to provide all the depreciable components. "Depreciable components" refers to all components of fixed capital cost and is calculated by subtracting land and working capital from the total capital investment, as defined in paragraph (b)(58) of this section.

NOTE TO PARAGRAPH (b)(57): By a court order on December 24, 2003, this paragraph (b)(57) is stayed indefinitely. The stayed provisions will become effective immediately if the court terminates the stay. At that time, EPA will publish a document in the FEDERAL REGISTER advising the public of the termination of the stay.

(58) *Total capital investment* means the sum of the following: all costs required to purchase needed process equipment (purchased equipment costs); the costs of labor and materials for installing that equipment (direct installation costs); the costs of site preparation and buildings; other costs such as engineering, construction and field expenses, fees to contractors, startup and performance tests, and contingencies (indirect installation costs); land for the process equipment; and working capital for the process equipment.

NOTE TO PARAGRAPH (b)(58): By a court order on December 24, 2003, this paragraph (b)(58) is stayed indefinitely. The stayed provisions will become effective immediately if the court terminates the stay. At that time, EPA will publish a document in the FEDERAL REGISTER advising the public of the termination of the stay.

(c) *Ambient air increments.* In areas designated as Class I, II or III, increases in pollutant concentration over the baseline concentration shall be limited to the following:

Pollutant	Maximum allowable increase (micrograms per cubic meter)
Class I	
Particulate matter:	
PM–10, annual arithmetic mean	4
PM–10, 24-hr maximum	8
Sulfur dioxide:	
Annual arithmetic mean	2
24-hr maximum	5
3-hr maximum	25
Nitrogen dioxide:	
Annual arithmetic mean	2.5
Class II	
Particulate matter:	
PM–10, annual arithmetic mean	17
PM–10, 24-hr maximum	30
Sulfur dioxide:	
Annual arithmetic mean	20
24-hr maximum	91
3-hr maximum	512
Nitrogen dioxide:	
Annual arithmetic mean	25
Class III	
Particulate matter	
PM–10, annual arithmetic mean	34
PM–10, 24-hr maximum	60
Sulfur dioxide:	
Annual arithmetic mean	40
24-hr maximum	182
3-hr maximum	700
Nitrogen dioxide:	
Annual arithmetic mean	50

For any period other than an annual period, the applicable maximum allowable increase may be exceeded during one such period per year at any one location.

(d) *Ambient air ceilings.* No concentration of a pollutant shall exceed:

(1) The concentration permitted under the national secondary ambient air quality standard, or

(2) The concentration permitted under the national primary ambient air quality standard, whichever concentration is lowest for the pollutant for a period of exposure.

(e) *Restrictions on area classifications.* (1) All of the following areas which were in existence on August 7, 1977, shall be Class I areas and may not be redesignated:

(i) International parks,

(ii) National wilderness areas which exceed 5,000 acres in size,

(iii) National memorial parks which exceed 5,000 acres in size, and

(iv) National parks which exceed 6,000 acres in size.

(2) Areas which were redesignated as Class I under regulations promulgated before August 7, 1977, shall remain Class I, but may be redesignated as provided in this section.

(3) Any other area, unless otherwise specified in the legislation creating such an area, is initially designated Class II, but may be redesignated as provided in this section.

(4) The following areas may be redesignated only as Class I or II:

(i) An area which as of August 7, 1977, exceeded 10,000 acres in size and was a national monument, a national primitive area, a national preserve, a national recreational area, a national wild and scenic river, a national wildlife refuge, a national lakeshore or seashore; and

(ii) A national park or national wilderness area established after August 7, 1977, which exceeds 10,000 acres in size.

(f) [Reserved]

(g) *Redesignation.* (1) All areas (except as otherwise provided under paragraph (e) of this section) are designated Class II as of December 5, 1974. Redesignation (except as otherwise precluded by paragraph (e) of this section) may be proposed by the respective States or Indian Governing Bodies, as provided below, subject to approval by the Administrator as a revision to the applicable State implementation plan.

(2) The State may submit to the Administrator a proposal to redesignate areas of the State Class I or Class II provided that:

(i) At least one public hearing has been held in accordance with procedures established in §51.102 of this chapter;

(ii) Other States, Indian Governing Bodies, and Federal Land Managers whose lands may be affected by the proposed redesignation were notified at least 30 days prior to the public hearing;

(iii) A discussion of the reasons for the proposed redesignation, including a satisfactory description and analysis of the health, environmental, economic, social and energy effects of the proposed redesignation, was prepared and made available for public inspection at least 30 days prior to the hearing and the notice announcing the hearing contained appropriate notification of the availability of such discussion;

(iv) Prior to the issuance of notice respecting the redesignation of an area that includes any Federal lands, the State has provided written notice to the appropriate Federal Land Manager and afforded adequate opportunity (not in excess of 60 days) to confer with the State respecting the redesignation and to submit written comments and recommendations. In redesignating any area with respect to which any Federal Land Manager had submitted written comments and recommendations, the State shall have published a list of any inconsistency between such redesignation and such comments and recommendations (together with the reasons for making such redesignation against the recommendation of the Federal Land Manager); and

(v) The State has proposed the redesignation after consultation with the elected leadership of local and other substate general purpose governments in the area covered by the proposed redesignation.

(3) Any area other than an area to which paragraph (e) of this section refers may be redesignated as Class III if—

(i) The redesignation would meet the requirements of paragraph (g)(2) of this section;

(ii) The redesignation, except any established by an Indian Governing Body, has been specifically approved by the Governor of the State, after consultation with the appropriate committees of the legislature, if it is in session, or with the leadership of the legislature, if it is not in session (unless State law provides that the redesignation must be specifically approved by State legislation) and if general purpose units of local government representing a majority of the residents of the area to be redesignated enact legislation or pass resolutions concurring in the redesignation:

(iii) The redesignation would not cause, or contribute to, a concentration of any air pollutant which would exceed any maximum allowable increase permitted under the classification of any other area or any national ambient air quality standard; and

(iv) Any permit application for any major stationary source or major modification, subject to review under paragraph (l) of this section, which could receive a permit under this section only if the area in question were redesignated as Class III, and any material submitted as part of that application, were available insofar as was practicable for public inspection prior to any public hearing on redesignation of the area as Class III.

(4) Lands within the exterior boundaries of Indian Reservations may be redesignated only by the appropriate Indian Governing Body. The appropriate Indian Governing Body may submit to the Administrator a proposal to redesignate areas Class I, Class II, or Class III: *Provided,* That:

(i) The Indian Governing Body has followed procedures equivalent to those required of a State under paragraphs (g)(2), (g)(3)(iii), and (g)(3)(iv) of this section; and

(ii) Such redesignation is proposed after consultation with the State(s) in which the Indian Reservation is located and which border the Indian Reservation.

(5) The Administrator shall disapprove, within 90 days of submission, a proposed redesignation of any area only if he finds, after notice and opportunity for public hearing, that such redesignation does not meet the procedural requirements of this paragraph or is inconsistent with paragraph (e) of this section. If any such disapproval occurs, the classification of the area shall be that which was in effect prior to the redesignation which was disapproved.

(6) If the Administrator disapproves any proposed redesignation, the State or Indian Governing Body, as appropriate, may resubmit the proposal after correcting the deficiencies noted by the Administrator.

(h) *Stack heights.* (1) The degree of emission limitation required for control of any air pollutant under this section shall not be affected in any manner by—

(i) So much of the stack height of any source as exceeds good engineering practice, or

(ii) Any other dispersion technique.

(2) Paragraph (h)(1) of this section shall not apply with respect to stack heights in existence before December 31, 1970, or to dispersion techniques implemented before then.

(i) *Exemptions.*

(1) The requirements of paragraphs (j) through (r) of this section shall not apply to a particular major stationary source or major modification, if;

(i) Construction commenced on the source or modification before August 7, 1977. The regulations at 40 CFR 52.21 as in effect before August 7, 1977, shall govern the review and permitting of any such source or modification; or

(ii) The source or modification was subject to the review requirements of 40 CFR 52.21(d)(1) as in effect before March 1, 1978, and the owner or operator:

(a) Obtained under 40 CFR 52.21 a final approval effective before March 1, 1978;

(b) Commenced construction before March 19, 1979; and

(c) Did not discontinue construction for a period of 18 months or more and completed construction within a reasonable time; or

(iii) The source or modification was subject to 40 CFR 52.21 as in effect before March 1, 1978, and the review of an application for approval for the stationary source or modification under 40 CFR 52.21 would have been completed by March 1, 1978, but for an extension of the public comment period pursuant to a request for such an extension. In such a case, the application shall continue to be processed, and granted or denied, under 40 CFR 52.21 as in effect prior to March 1, 1978; or

(iv) The source or modification was not subject to 40 CFR 52.21 as in effect before March 1, 1978, and the owner or operator:

(a) Obtained all final Federal, state and local preconstruction approvals or permits necessary under the applicable State Implementation Plan before March 1, 1978;

(b) Commenced construction before March 19, 1979; and

(c) Did not discontinue construction for a period of 18 months or more and completed construction within a reasonable time; or

(v) The source or modification was not subject to 40 CFR 52.21 as in effect on June 19, 1978 or under the partial stay of regulations published on February 5, 1980 (45 FR 7800), and the owner or operator:

(a) Obtained all final Federal, state and local preconstruction approvals or permits necessary under the applicable State Implementation Plan before August 7, 1980;

(b) Commenced construction within 18 months from August 7, 1980, or any earlier time required under the applicable State Implementation Plan; and

(c) Did not discontinuue construction for a period of 18 months or more and completed construction within a reasonable time; or

(vi) The source or modification would be a nonprofit health or nonprofit educational institution, or a major modification would occur at such an institution, and the governor of the state in which the source or modification would be located requests that it be exempt from those requirements; or

(vii) The source or modification would be a major stationary source or major modification only if fugitive emissions, to the extent quantifiable, are considered in calculating the potential to emit of the stationary source or modification and the source does not belong to any of the following categories:

(a) Coal cleaning plants (with thermal dryers);

(b) Kraft pulp mills;

(c) Portland cement plants;

(d) Primary zinc smelters;

(e) Iron and steel mills;

(f) Primary aluminum ore reduction plants;

(g) Primary copper smelters;

(h) Municipal incinerators capable of charging more than 250 tons of refuse per day;

(i) Hydrofluoric, sulfuric, or nitric acid plants;

(j) Petroleum refineries;

(k) Lime plants;

(l) Phosphate rock processing plants;

(m) Coke oven batteries;

(n) Sulfur recovery plants;

(o) Carbon black plants (furnace process);

(p) Primary lead smelters;

(q) Fuel conversion plants;

(r) Sintering plants;

(s) Secondary metal production plants;

(t) Chemical process plants;

(u) Fossil-fuel boilers (or combination thereof) totaling more than 250 million British thermal units per hour heat input;

(v) Petroleum storage and transfer units with a total storage capacity exceeding 300,000 barrels;

(w) Taconite ore processing plants;

(x) Glass fiber processing plants;

(y) Charcoal production plants;

(z) Fossil fuel-fired steam electric plants of more than 250 million British thermal units per hour heat input;

(aa) Any other stationary source category which, as of August 7, 1980, is being regulated under section 111 or 112 of the Act; or

(viii) The source is a portable stationary source which has previously received a permit under this section, and

(*a*) The owner or operator proposes to relocate the source and emissions of the source at the new location would be temporary; and

(*b*) The emissions from the source would not exceed its allowable emissions; and

(*c*) The emissions from the source would impact no Class I area and no area where an applicable increment is known to be violated; and

(*d*) Reasonable notice is given to the Administrator prior to the relocation identifying the proposed new location and the probable duration of operation at the new location. Such notice shall be given to the Administrator not less than 10 days in advance of the proposed relocation unless a different time duration is previously approved by the Administrator.

(ix) The source or modification was not subject to §52.21, with respect to particulate matter, as in effect before July 31, 1987, and the owner or operator:

(a) Obtained all final Federal, State, and local preconstruction approvals or permits necessary under the applicable State implementation plan before July 31, 1987;

(b) Commenced construction within 18 months after July 31, 1987, or any earlier time required under the State implementation plan; and

(c) Did not discontinue construction for a period of 18 months or more and completed construction within a reasonable period of time.

(x) The source or modification was subject to 40 CFR 52.21, with respect to particulate matter, as in effect before July 31, 1987 and the owner or operator submitted an application for a permit under this section before that date, and the Administrator subsequently determines that the application as submitted was complete with respect to the particular matter requirements then in effect in the section. Instread, the requirments of paragraphs (j) through (r) of this section that were in effect before July 31, 1987 shall apply to such source or modifiction.

(2) The requirements of paragraphs (j) through (r) of this section shall not apply to a major stationary source or major modification with respect to a particular pollutant if the owner or operator demonstrates that, as to that pollutant, the source or modification is located in an area designated as nonattainment under section 107 of the Act.

(3) The requirements of paragraphs (k), (m) and (o) of this section shall not apply to a major stationary source or major modification with respect to a particular pollutant, if the allowable emissions of that pollutant from the source, or the net emissions increase of that pollutant from the modification:

(i) Would impact no Class I area and no area where an applicable increment is known to be violated, and

(ii) Would be temporary.

(4) The requirements of paragraphs (k), (m) and (o) of this section as they relate to any maximum allowable increase for a Class II area shall not apply to a major modification at a stationary source that was in existence on March 1, 1978, if the net increase in allowable emissions of each regulated NSR pollutant from the modification after the application of best available control technology would be less than 50 tons per year.

(5) The Administrator may exempt a stationary source or modification from the requirements of paragraph (m) of this section, with respect to monitoring for a particular pollutant if:

(i) The emissions increase of the pollutant from the new source or the net emissions increase of the pollutant from the modification would cause, in any area, air quality impacts less than the following amounts:

Carbon monoxide—575 μg/m^3, 8-hour average;
Nitrogen dioxide—14 μg/m^3, annual average;
Particulate matter—10 μg/m^3 of PM–10, 24-hour average;
Sulfur dioxide—13 μg/m^3, 24-hour average;
Ozone; [1]
Lead—0.1 μg/m^3, 3-month average;
Fluorides—0.25 μg/m^3, 24-hour average;
Total reduced sulfur—10 μg/m^3, 1-hour average;
Hydrogen sulfide—0.2 μg/m^3, 1-hour average;
Reduced sulfur compounds—10 μg/m^3, 1-hour average; or

(ii) The concentrations of the pollutant in the area that the source or modification would affect are less than the concentrations listed in paragraph (i)(8)(i) of this section, or the pollutant is not listed in paragraph (i)(8)(i) of this section.

(6) The requirements for best available control technology in paragraph (j) of this section and the requirements for air quality analyses in paragraph (m)(1) of this section, shall not apply to a particular stationary source or modification that was subject to 40 CFR 52.21 as in effect on June 19, 1978, if the owner or operator of the source or modification submitted an application for a permit under those regulations before August 7, 1980, and the Administrator subsequently determines that the application as submitted before that date was complete. Instead, the requirements at 40 CFR 52.21(j) and (n) as in effect on June 19, 1978 apply to any such source or modification.

(7)(i) The requirements for air quality monitoring in paragraphs (m)(1) (ii) through (iv) of this section shall not apply to a particular source or modification that was subject to 40 CFR 52.21 as in effect on June 19, 1978, if the owner or operator of the source or

[1] No *de minimis* air quality level is provided for ozone. However, any net increase of 100 tons per year or more of volatile organic compounds subject to PSD would be required to perform an ambient impact analysis including the gathering of ambient air quality data.

modification submits an application for a permit under this section on or before June 8, 1981, and the Administrator subsequently determines that the application as submitted before that date was complete with respect to the requirements of this section other than those in paragraphs (m)(1) (ii) through (iv) of this section, and with respect to the requirements for such analyses at 40 CFR 52.21(m)(2) as in effect on June 19, 1978. Instead, the latter requirements shall apply to any such source or modification.

(ii) The requirements for air quality monitoring in paragraphs (m)(1) (ii) through (iv) of this section shall not apply to a particular source or modification that was not subject to 40 CFR 52.21 as in effect on June 19, 1978, if the owner or operator of the source or modification submits an application for a permit under this section on or before June 8, 1981, and the Administrator subsequently determines that the application as submitted before that date was complete, except with respect to the requirements in paragraphs (m)(1) (ii) through (iv).

(8)(i) At the discretion of the Administrator, the requirements for air quality monitoring of PM_{10} in paragraphs (m)(1) (i)—(iv) of this section may not apply to a particular source or modification when the owner or operator of the source or modification submits an application for a permit under this section on or before June 1, 1988 and the Administrator subsequently determines that the application as submitted before that date was complete, except with respect to the requirements for monitoring particulate matter in paragraphs (m)(1) (i)—(iv).

(ii) The requirements for air quiality monitoring pf PM_{10} in paragraphs (m)(1), (ii) and (iv) and (m)(3) of this section shall apply to a particular source or modification if the owner or operator of the source or modification submits an application for a permit under this section after June 1, 1988 and no later than December 1, 1988. The data shall have been gathered over at least the period from February 1, 1988 to the date the application becomes otherwise complete in accordance with the provisions set forth under paragraph (m)(1)(viii) of this section, except that if the Administrator determines that a complete and adequate analysis can be accomplished with monitoring data over a shorter period (not to be less than 4 months), the data that paragraph (m)(1)(iii) requires shall have been gathered over a shorter period.

(9) The requirements of paragraph (k)(2) of this section shall not apply to a stationary source or modification with respect to any maximum allowable increase for nitrogen oxides if the owner or operator of the source or modification submitted an application for a permit under this section before the provisions embodying the maximum allowable increase took effect as part of the applicable implementation plan and the Administrator subsequently determined that the application as submitted before that date was complete.

(10) The requirements in paragraph (k)(2) of this section shall not apply to a stationary source or modification with respect to any maximum allowable increase for PM–10 if (i) the owner or operator of the source or modification submitted an application for a permit under this section before the provisions embodying the maximum allowable increases for PM–10 took effect in an implementation plan to which this section applies, and (ii) the Administrator subsequently determined that the application as submitted before that date was otherwise complete. Instead, the requirements in paragraph (k)(2) shall apply with respect to the maximum allowable increases for TSP as in effect on the date the application was submitted.

(j) *Control technology review*. (1) A major stationary source or major modification shall meet each applicable emissions limitation under the State Implementation Plan and each applicable emissions standard and standard of performance under 40 CFR parts 60 and 61.

(2) A new major stationary source shall apply best available control technology for each regulated NSR pollutant that it would have the potential to emit in significant amounts.

(3) A major modification shall apply best available control technology for each regulated NSR pollutant for which it would result in a significant

net emissions increase at the source. This requirement applies to each proposed emissions unit at which a net emissions increase in the pollutant would occur as a result of a physical change or change in the method of operation in the unit.

(4) For phased construction projects, the determination of best available control technology shall be reviewed and modified as appropriate at the latest reasonable time which occurs no later than 18 months prior to commencement of construction of each independent phase of the project. At such time, the owner or operator of the applicable stationary source may be required to demonstrate the adequacy of any previous determination of best available control technology for the source.

(k) *Source impact analysis.* The owner or operator of the proposed source or modification shall demonstrate that allowable emission increases from the proposed source or modification, in conjunction with all other applicable emissions increases or reductions (including secondary emissions), would not cause or contribute to air pollution in violation of:

(1) Any national ambient air quality standard in any air quality control region; or

(2) Any applicable maximum allowable increase over the baseline concentration in any area.

(l) *Air quality models.* (1) All estimates of ambient concentrations required under this paragraph shall be based on applicable air quality models, data bases, and other requirements specified in appendix W of part 51 of this chapter (Guideline on Air Quality Models).

(2) Where an air quality model specified in appendix W of part 51 of this chapter (Guideline on Air Quality Models) is inappropriate, the model may be modified or another model substituted. Such a modification or substitution of a model may be made on a case-by-case basis or, where appropriate, on a generic basis for a specific state program. Written approval of the Administrator must be obtained for any modification or substitution. In addition, use of a modified or substituted model must be subject to notice and opportunity for public comment under procedures developed in accordance with paragraph (q) of this section.

(m) *Air quality analysis*—(1) *Preapplication analysis.* (i) Any application for a permit under this section shall contain an analysis of ambient air quality in the area that the major stationary source or major modification would affect for each of the following pollutants:

(*a*) For the source, each pollutant that it would have the potential to omit in a significant amount;

(*b*) For the modification, each pollutant for which it would result in a significant net emissions increase.

(ii) With respect to any such pollutant for which no National Ambient Air Quality Standard exists, the analysis shall contain such air quality monitoring data as the Administrator determines is necessary to assess ambient air quality for that pollutant in any area that the emissions of that pollutant would affect.

(iii) With respect to any such pollutant (other than nonmethane hydrocarbons) for which such a standard does exist, the analysis shall contain continuous air quality monitoring data gathered for purposes of determining whether emissions of that pollutant would cause or contribute to a violation of the standard or any maximum allowable increase.

(iv) In general, the continuous air quality monitoring data that is required shall have been gathered over a period of at least one year and shall represent at least the year preceding receipt of the application, except that, if the Administrator determines that a complete and adequate analysis can be accomplished with monitoring data gathered over a period shorter than one year (but not to be less than four months), the data that is required shall have been gathered over at least that shorter period.

(v) For any application which becomes complete, except as to the requirements of paragraphs (m)(1) (iii) and (iv) of this section, between June 8, 1981, and February 9, 1982, the data that paragraph (m)(1)(iii) of this section, requires shall have been gathered over at least the period from February 9, 1981, to the date the application becomes otherwise complete, except that:

(*a*) If the source or modification would have been major for that pollutant under 40 CFR 52.21 as in effect on June 19, 1978, any monitoring data shall have been gathered over at least the period required by those regulations.

(*b*) If the Administrator determines that a complete and adequate analysis can be accomplished with monitoring data over a shorter period (not to be less than four months), the data that paragraph (m)(1)(iii) of this section, requires shall have been gathered over at least that shorter period.

(*c*) If the monitoring data would relate exclusively to ozone and would not have been required under 40 CFR 52.21 as in effect on June 19, 1978, the Administrator may waive the otherwise applicable requirements of this paragraph (v) to the extent that the applicant shows that the monitoring data would be unrepresentative of air quality over a full year.

(vi) The owner or operator of a proposed stationary source or modification of violatile organic compounds who satisfies all conditions of 40 CFR part 51 Appendix S, section IV may provide post-approval monitoring data for ozone in lieu of providing preconstruction data as requried under paragraph (m)(1) of this section.

(vii) For any application that becomes complete, except as to the requirements of paragraphs (m)(1) (iii) and (iv) pertaining to PM_{10}, after December 1, 1988 and no later than August 1, 1989 the data that paragraph (m)(1)(iii) requires shall have been gathered over at least the period from August 1, 1988 to the date the application becomes otherwise complete, except that if the Administrator determines that a complete and adequate analysis can be accomplished with monitoring data over a shorter period (not to be less than 4 months), the data that paragraph (m)(1)(iii) requires shall have been gathered over that shorter period.

(viii) With respect to any requirements for air quality monitoring of PM_{10} under paragraphs (i)(11) (i) and (ii) of this section the owner or operator of the source or modification shall use a monitoring method approved by the Administratorand shall estimate the ambient concentrations of PM_{10} using the data collected by such approved monitoring method in accordance with estimating procedures approved by the Administrator.

(2) Post-construction monitoring. The owner or operator of a major stationary source or major modification shall, after construction of the stationary source or modification, conduct such ambient monitoring as the Administrator determines is necessary to determine the effect emissions from the stationary source or modification may have, or are having, on air quality in any area.

(3) Operations of monitoring stations. The owner or operator of a major stationary source or major modification shall meet the requirements of Appendix B to part 58 of this chapter during the operation of monitoring stations for purposes of satisfying paragraph (m) of this section.

(n) *Source information*. The owner or operator of a proposed source or modification shall submit all information necessary to perform any analysis or make any determination required under this section.

(1) With respect to a source or modification to which paragraphs (j), (l), (n) and (p) of this section apply, such information shall include:

(i) A description of the nature, location, design capacity, and typical operating schedule of the source or modification, including specifications and drawings showing its design and plant layout;

(ii) A detailed schedule for construction of the source or modification;

(iii) A detailed description as to what system of continuous emission reduction is planned for the source or modification, emission estimates, and any other information necessary to determine that best available control technology would be applied.

(2) Upon request of the Administrator, the owner or operator shall also provide information on:

(i) The air quality impact of the source or modification, including meteorological and topographical data necessary to estimate such impact; and

(ii) The air quality impacts, and the nature and extent of any or all general commercial, residential, industrial,

and other growth which has occurred since August 7, 1977, in the area the source or modification would affect.

(o) *Additional impact analyses.* (1) The owner or operator shall provide an analysis of the impairment to visibility, soils and vegetation that would occur as a result of the source or modification and general commercial, residential, industrial and other growth associated with the source or modification. The owner or operator need not provide an analysis of the impact on vegetation having no significant commercial or recreational value.

(2) The owner or operator shall provide an analysis of the air quality impact projected for the area as a result of general commercial, residential, industrial and other growth associated with the source or modification.

(3) *Visibility monitoring.* The Administrator may require monitoring of visibility in any Federal class I area near the proposed new stationary source for major modification for such purposes and by such means as the Administrator deems necessary and appropriate.

(p) *Sources impacting Federal Class I areas—additional requirements*—(1) *Notice to Federal land managers.* The Administrator shall provide written notice of any permit application for a proposed major stationary source or major modification, the emissions from which may affect a Class I area, to the Federal land manager and the Federal official charged with direct responsibility for management of any lands within any such area. Such notification shall include a copy of all information relevant to the permit application and shall be given within 30 days of receipt and at least 60 days prior to any public hearing on the application for a permit to construct. Such notification shall include an analysis of the proposed source's anticipated impacts on visibility in the Federal Class I area. The Administrator shall also provide the Federal land manager and such Federal officials with a copy of the preliminary determination required under paragraph (q) of this section, and shall make available to them any materials used in making that determination, promptly after the Administrator makes such determination. Finally, the Administrator shall also notify all affected Federal land managers within 30 days of receipt of any advance notification of any such permit application.

(2) *Federal Land Manager.* The Federal Land Manager and the Federal official charged with direct responsibility for management of such lands have an affirmative responsibility to protect the air quality related values (including visibility) of such lands and to consider, in consultation with the Administrator, whether a proposed source or modification will have an adverse impact on such values.

(3) *Visibility analysis.* The Administrator shall consider any analysis performed by the Federal land manager, provided within 30 days of the notification required by paragraph (p)(1) of this section, that shows that a proposed new major stationary source or major modification may have an adverse impact on visibility in any Federal Class I area. Where the Administrator finds that such an analysis does not demonstrate to the satisfaction of the Administrator that an adverse impact on visibility will result in the Federal Class I area, the Administrator must, in the notice of public hearing on the permit application, either explain his decision or give notice as to where the explanation can be obtained.

(4) *Denial—impact on air quality related values.* The Federal Land Manager of any such lands may demonstrate to the Administrator that the emissions from a proposed source or modification would have an adverse impact on the air quality-related values (including visibility) of those lands, notwithstanding that the change in air quality resulting from emissions from such source or modification would not cause or contribute to concentrations which would exceed the maximum allowable increases for a Class I area. If the Administrator concurs with such demonstration, then he shall not issue the permit.

(5) *Class I variances.* The owner or operator of a proposed source or modification may demonstrate to the Federal Land Manager that the emissions from such source or modification would

have no adverse impact on the air quality related values of any such lands (including visibility), notwithstanding that the change in air quality resulting from emissions from such source or modification would cause or contribute to concentrations which would exceed the maximum allowable increases for a Class I area. If the Federal land manager concurs with such demonstration and he so certifies, the State may authorize the Administrator: *Provided,* That the applicable requirements of this section are otherwise met, to issue the permit with such emission limitations as may be necessary to assure that emissions of sulfur dioxide, particulate matter, and nitrogen oxides would not exceed the following maximum allowable increases over minor source baseline concentration for such pollutants:

Pollutant	Maximum allowable increase (micrograms per cubic meter)
Particulate matter:	
PM–10, annual arithmetic mean	17
PM–10, 24-hr maximum	30
Sulfur dioxide:	
Annual arithmetic mean	20
24-hr maximum	91
3-hr maximum	325
Nitrogen dioxide:	
Annual arithmetic mean	25

(6) *Sulfur dioxide variance by Governor with Federal Land Manager's concurrence.* The owner or operator of a proposed source or modification which cannot be approved under paragraph (q)(4) of this section may demonstrate to the Governor that the source cannot be constructed by reason of any maximum allowable increase for sulfur dioxide for a period of twenty-four hours or less applicable to any Class I area and, in the case of Federal mandatory Class I areas, that a variance under this clause would not adversely affect the air quality related values of the area (including visibility). The Governor, after consideration of the Federal Land Manager's recommendation (if any) and subject to his concurrence, may, after notice and public hearing, grant a variance from such maximum allowable increase. If such variance is granted, the Administrator shall issue a permit to such source or modification pursuant to the requirements of paragraph (q)(7) of this section: *Provided,* That the applicable requirements of this section are otherwise met.

(7) *Variance by the Governor with the President's concurrence.* In any case where the Governor recommends a variance in which the Federal Land Manager does not concur, the recommendations of the Governor and the Federal Land Manager shall be transmitted to the President. The President may approve the Governor's recommendation if he finds that the variance is in the national interest. If the variance is approved, the Administrator shall issue a permit pursuant to the requirements of paragraph (q)(7) of this section: *Provided,* That the applicable requirements of this section are otherwise met.

(8) *Emission limitations for Presidential or gubernatorial variance.* In the case of a permit issued pursuant to paragraph (q) (5) or (6) of this section the source or modification shall comply with such emission limitations as may be necessary to assure that emissions of sulfur dioxide from the source or modification would not (during any day on which the otherwise applicable maximum allowable increases are exceeded) cause or contribute to concentrations which would exceed the following maximum allowable increases over the baseline concentration and to assure that such emissions would not cause or contribute to concentrations which exceed the otherwise applicable maximum allowable increases for periods of exposure of 24 hours or less for more than 18 days, not necessarily consecutive, during any annual period:

MAXIMUM ALLOWABLE INCREASE

[Micrograms per cubic meter]

Period of exposure	Terrain areas	
	Low	High
24-hr maximum	36	62
3-hr maximum	130	221

(q) *Public participation.* The Administrator shall follow the applicable procedures of 40 CFR part 124 in processing applications under this section. The Administrator shall follow the procedures at 40 CFR 52.21(r) as in effect on June 19, 1979, to the extent that the

procedures of 40 CFR part 124 do not apply.

(r) *Source obligation.* (1) Any owner or operator who constructs or operates a source or modification not in accordance with the application submitted pursuant to this section or with the terms of any approval to construct, or any owner or operator of a source or modification subject to this section who commences construction after the effective date of these regulations without applying for and receiving approval hereunder, shall be subject to appropriate enforcement action.

(2) Approval to construct shall become invalid if construction is not commenced within 18 months after receipt of such approval, if construction is discontinued for a period of 18 months or more, or if construction is not completed within a reasonable time. The Administrator may extend the 18-month period upon a satisfactory showing that an extension is justified. This provision does not apply to the time period between construction of the approved phases of a phased construction project; each phase must commence construction within 18 months of the projected and approved commencement date.

(3) Approval to construct shall not relieve any owner or operator of the responsibility to comply fully with applicable provisions of the State implementation plan and any other requirements under local, State, or Federal law.

(4) At such time that a particular source or modification becomes a major stationary source or major modification solely by virtue of a relaxation in any enforceable limitation which was established after August 7, 1980, on the capacity of the source or modification otherwise to emit a pollutant, such as a restriction on hours of operation, then the requirements or paragraphs (j) through (s) of this section shall apply to the source or modification as though construction had not yet commenced on the source or modification.

(5) [Reserved]

(6) The provisions of this paragraph (r)(6) apply to projects at an existing emissions unit at a major stationary source (other than projects at a Clean Unit or at a source with a PAL) in circumstances where there is a reasonable possibility that a project that is not a part of a major modification may result in a significant emissions increase and the owner or operator elects to use the method specified in paragraphs (b)(41)(ii)(*a*) through (*c*) of this section for calculating projected actual emissions.

(i) Before beginning actual construction of the project, the owner or operator shall document and maintain a record of the following information:

(*a*) A description of the project;

(*b*) Identification of the emissions unit(s) whose emissions of a regulated NSR pollutant could be affected by the project; and

(*c*) A description of the applicability test used to determine that the project is not a major modification for any regulated NSR pollutant, including the baseline actual emissions, the projected actual emissions, the amount of emissions excluded under paragraph (b)(41)(ii)(*c*) of this section and an explanation for why such amount was excluded, and any netting calculations, if applicable.

(ii) If the emissions unit is an existing electric utility steam generating unit, before beginning actual construction, the owner or operator shall provide a copy of the information set out in paragraph (r)(6)(i) of this section to the Administrator. Nothing in this paragraph (r)(6)(ii) shall be construed to require the owner or operator of such a unit to obtain any determination from the Administrator before beginning actual construction.

(iii) The owner or operator shall monitor the emissions of any regulated NSR pollutant that could increase as a result of the project and that is emitted by any emissions unit identified in paragraph (r)(6)(i)(*b*) of this section; and calculate and maintain a record of the annual emissions, in tons per year on a calendar year basis, for a period of 5 years following resumption of regular operations after the change, or for a period of 10 years following resumption of regular operations after the change if the project increases the design capacity of or potential to emit that regulated NSR pollutant at such emissions unit.

(iv) If the unit is an existing electric utility steam generating unit, the owner or operator shall submit a report to the Administrator within 60 days after the end of each year during which records must be generated under paragraph (r)(6)(iii) of this section setting out the unit's annual emissions during the calendar year that preceded submission of the report.

(v) If the unit is an existing unit other than an electric utility steam generating unit, the owner or operator shall submit a report to the Administrator if the annual emissions, in tons per year, from the project identified in paragraph (r)(6)(i) of this section, exceed the baseline actual emissions (as documented and maintained pursuant to paragraph (r)(6)(i)(*c*) of this section), by a significant amount (as defined in paragraph (b)(23) of this section) for that regulated NSR pollutant, and if such emissions differ from the preconstruction projection as documented and maintained pursuant to paragraph (r)(6)(i)(*c*) of this section. Such report shall be submitted to the Administrator within 60 days after the end of such year. The report shall contain the following:

(*a*) The name, address and telephone number of the major stationary source;

(*b*) The annual emissions as calculated pursuant to paragraph (r)(6)(iii) of this section; and

(*c*) Any other information that the owner or operator wishes to include in the report (e.g., an explanation as to why the emissions differ from the preconstruction projection).

(7) The owner or operator of the source shall make the information required to be documented and maintained pursuant to paragraph (r)(6) of this section available for review upon a request for inspection by the Administrator or the general public pursuant to the requirements contained in §70.4(b)(3)(viii) of this chapter.

(s) *Environmental impact statements.* Whenever any proposed source or modification is subject to action by a Federal Agency which might necessitate preparation of an environmental impact statement pursuant to the National Environmental Policy Act (42 U.S.C. 4321), review by the Administrator conducted pursuant to this section shall be coordinated with the broad environmental reviews under that Act and under section 309 of the Clean Air Act to the maximum extent feasible and reasonable.

(t) *Disputed permits or redesignations.* If any State affected by the redesignation of an area by an Indian Governing Body, or any Indian Governing Body of a tribe affected by the redesignation of an area by a State, disagrees with such redesignation, or if a permit is proposed to be issued for any major stationary source or major modification proposed for construction in any State which the Governor of an affected State or Indian Governing Body of an affected tribe determines will cause or contribute to a cumulative change in air quality in excess of that allowed in this part within the affected State or Indian Reservation, the Governor or Indian Governing Body may request the Administrator to enter into negotiations with the parties involved to resolve such dispute. If requested by any State or Indian Governing Body involved, the Administrator shall make a recommendation to resolve the dispute and protect the air quality related values of the lands involved. If the parties involved do not reach agreement, the Administrator shall resolve the dispute and his determination, or the results of agreements reached through other means, shall become part of the applicable State implementation plan and shall be enforceable as part of such plan. In resolving such disputes relating to area redesignation, the Administrator shall consider the extent to which the lands involved are of sufficient size to allow effective air quality management or have air quality related values of such an area.

(u) *Delegation of authority.* (1) The Administrator shall have the authority to delegate his responsibility for conducting source review pursuant to this section, in accordance with paragraphs (v) (2) and (3) of this section.

(2) Where the Administrator delegates the responsibility for conducting source review under this section to any agency other than a Regional Office of the Environmental Protection Agency, the following provisions shall apply:

(i) Where the delegate agency is not an air pollution control agency, it shall

consult with the appropriate State and local air pollution control agency prior to making any determination under this section. Similarly, where the delegate agency does not have continuing responsibility for managing land use, it shall consult with the appropriate State and local agency primarily responsible for managing land use prior to making any determination under this section.

(ii) The delegate agency shall send a copy of any public comment notice required under paragraph (r) of this section to the Administrator through the appropriate Regional Office.

(3) The Administrator's authority for reviewing a source or modification located on an Indian Reservation shall not be redelegated other than to a Regional Office of the Environmental Protection Agency, except where the State has assumed jurisdiction over such land under other laws. Where the State has assumed such jurisdiction, the Administrator may delegate his authority to the States in accordance with paragraph (v)(2) of this section.

(4) In the case of a source or modification which proposes to construct in a class III area, emissions from which would cause or contribute to air quality exceeding the maximum allowable increase applicable if the area were designated a class II area, and where no standard under section 111 of the act has been promulgated for such source category, the Administrator must approve the determination of best available control technology as set forth in the permit.

(v) *Innovative control technology.* (1) An owner or operator of a proposed major stationary source or major modification may request the Administrator in writing no later than the close of the comment period under 40 CFR 124.10 to approve a system of innovative control technology.

(2) The Administrator shall, with the consent of the governor(s) of the affected state(s), determine that the source or modification may employ a system of innovative control technology, if:

(i) The proposed control system would not cause or contribute to an unreasonable risk to public health, welfare, or safety in its operation or function;

(ii) The owner or operator agrees to achieve a level of continuous emissions reduction equivalent to that which would have been required under paragraph (j)(2) of this section, by a date specified by the Administrator. Such date shall not be later than 4 years from the time of startup or 7 years from permit issuance;

(iii) The source or modification would meet the requirements of paragraphs (j) and (k) of this section, based on the emissions rate that the stationary source employing the system of innovative control technology would be required to meet on the date specified by the Administrator;

(iv) The source or modification would not before the date specified by the Administrator:

(*a*) Cause or contribute to a violation of an applicable national ambient air quality standard; or

(*b*) Impact any area where an applicable increment is known to be violated; and

(v) All other applicable requirements including those for public participation have been met.

(vi) The provisions of paragraph (p) of this section (relating to Class I areas) have been satisfied with respect to all periods during the life of the source or modification.

(3) The Administrator shall withdraw any approval to employ a system of innovative control technology made under this section, if:

(i) The proposed system fails by the specified date to achieve the required continuous emissions reduction rate; or

(ii) The proposed system fails before the specified date so as to contribute to an unreasonable risk to public health, welfare, or safety; or

(iii) The Administrator decides at any time that the proposed system is unlikely to achieve the required level of control or to protect the public health, welfare, or safety.

(4) If a source or modification fails to meet the required level of continuous emission reduction within the specified time period or the approval is withdrawn in accordance with paragraph (v)(3) of this section, the Administrator

may allow the source or modification up to an additional 3 years to meet the requirement for the application of best available control technology through use of a demonstrated system of control.

(w) *Permit rescission.* (1) Any permit issued under this section or a prior version of this section shall remain in effect, unless and until it expires under paragraph (s) of this section or is rescinded.

(2) Any owner or operator of a stationary source or modification who holds a permit for the source or modification which was issued under 40 CFR 52.21 as in effect on July 30, 1987, or any earlier version of this section, may request that the Administrator rescind the permit or a particular portion of the permit.

(3) The Administrator shall grant an application for rescission if the application shows that this section would not apply to the source or modification.

(4) If the Administrator rescinds a permit under this paragraph, the public shall be given adequate notice of the rescission. Publication of an announcement of rescission in a newspaper of general circulation in the affected region within 60 days of the rescission shall be considered adequate notice.

(x) *Clean Unit Test for emissions units that are subject to BACT or LAER.* An owner or operator of a major stationary source has the option of using the Clean Unit Test to determine whether emissions increases at a Clean Unit are part of a project that is a major modification according to the provisions in paragraphs (x)(1) through (9) of this section.

(1) *Applicability.* The provisions of this paragraph (x) apply to any emissions unit for which a reviewing authority has issued a major NSR permit within the last 10 years.

(2) *General provisions for Clean Units.* The provisions in paragraphs (x)(2)(i) through (iv) of this section apply to a Clean Unit.

(i) Any project for which the owner or operator begins actual construction after the effective date of the Clean Unit designation (as determined in accordance with paragraph (x)(4) of this section) and before the expiration date (as determined in accordance with paragraph (x)(5) of this section) will be considered to have occurred while the emissions unit was a Clean Unit.

(ii) If a project at a Clean Unit does not cause the need for a change in the emission limitations or work practice requirements in the permit for the unit that were adopted in conjunction with BACT and the project would not alter any physical or operational characteristics that formed the basis for the BACT determination as specified in paragraph (x)(6)(iv) of this section, the emissions unit remains a Clean Unit.

(iii) If a project causes the need for a change in the emission limitations or work practice requirements in the permit for the unit that were adopted in conjunction with BACT or the project would alter any physical or operational characteristics that formed the basis for the BACT determination as specified in paragraph (x)(6)(iv) of this section, then the emissions unit loses its designation as a Clean Unit upon issuance of the necessary permit revisions (unless the unit re-qualifies as a Clean Unit pursuant to paragraph (x)(3)(iii) of this section). If the owner or operator begins actual construction on the project without first applying to revise the emissions unit's permit, the Clean Unit designation ends immediately prior to the time when actual construction begins.

(iv) A project that causes an emissions unit to lose its designation as a Clean Unit is subject to the applicability requirements of paragraphs (a)(2)(iv)(*a*) through (*d*) and paragraph (a)(2)(iv)(*f*) of this section as if the emissions unit is not a Clean Unit.

(3) *Qualifying or re-qualifying to use the Clean Unit Applicability Test.* An emissions unit automatically qualifies as a Clean Unit when the unit meets the criteria in paragraphs (x)(3)(i) and (ii) of this section. After the original Clean Unit expires in accordance with paragraph (x)(5) of this section or is lost pursuant to paragraph (x)(2)(iii) of this section, such emissions unit may re-qualify as a Clean Unit under either paragraph (x)(3)(iii) of this section, or under the Clean Unit provisions in paragraph (y) of this section. To re-qualify as a Clean Unit under paragraph (x)(3)(iii) of this section, the

emissions unit must obtain a new major NSR permit issued through the applicable PSD program and meet all the criteria in paragraph (x)(3)(iii) of this section. The Clean Unit designation applies individually for each pollutant emitted by the emissions unit.

(i) *Permitting requirement.* The emissions unit must have received a major NSR permit within the last 10 years. The owner or operator must maintain and be able to provide information that would demonstrate that this permitting requirement is met.

(ii) *Qualifying air pollution control technologies.* Air pollutant emissions from the emissions unit must be reduced through the use of air pollution control technology (which includes pollution prevention as defined under paragraph (b)(39) of this section or work practices) that meets both the following requirements in paragraphs (x)(3)(ii)(*a*) and (*b*) of this section.

(*a*) The control technology achieves the BACT or LAER level of emissions reductions as determined through issuance of a major NSR permit within the past 10 years. However, the emissions unit is not eligible for the Clean Unit designation if the BACT determination resulted in no requirement to reduce emissions below the level of a standard, uncontrolled, new emissions unit of the same type.

(*b*) The owner or operator made an investment to install the control technology. For the purpose of this determination, an investment includes expenses to research the application of a pollution prevention technique to the emissions unit or expenses to apply a pollution prevention technique to an emissions unit.

(iii) *Re-qualifying for the Clean Unit designation.* The emissions unit must obtain a new major NSR permit that requires compliance with the current-day BACT (or LAER), and the emissions unit must meet the requirements in paragraphs (x)(3)(i) and (x)(3)(ii) of this section.

(4) *Effective date of the Clean Unit designation.* The effective date of an emissions unit's Clean Unit designation (that is, the date on which the owner or operator may begin to use the Clean Unit Test to determine whether a project at the emissions unit is a major modification) is determined according to the applicable paragraph (x)(4)(i) or (x)(4)(ii) of this section.

(i) *Original Clean Unit designation, and emissions units that re-qualify as Clean Units by implementing new control technology to meet current-day BACT.* The effective date is the date the emissions unit's air pollution control technology is placed into service, or 3 years after the issuance date of the major NSR permit, whichever is earlier, but no sooner than March 3, 2003, that is the date these provisions become effective.

(ii) *Emissions units that re-qualify for the Clean Unit designation using an existing control technology.* The effective date is the date the new, major NSR permit is issued.

(5) *Clean Unit expiration.* An emissions unit's Clean Unit designation expires (that is, the date on which the owner or operator may no longer use the Clean Unit Test to determine whether a project affecting the emissions unit is, or is part of, a major modification) according to the applicable paragraph (x)(5)(i) or (ii) of this section.

(i) *Original Clean Unit designation, and emissions units that re-qualify by implementing new control technology to meet current-day BACT.* For any emissions unit that automatically qualifies as a Clean Unit under paragraphs (x)(3)(i) and (ii) of this section or re-qualifies by implementing new control technology to meet current-day BACT under paragraph (x)(3)(iii) of this section, the Clean Unit designation expires 10 years after the effective date, or the date the equipment went into service, whichever is earlier; or, it expires at any time the owner or operator fails to comply with the provisions for maintaining the Clean Unit designation in paragraph (x)(7) of this section.

(ii) *Emissions units that re-qualify for the Clean Unit designation using an existing control technology.* For any emissions unit that re-qualifies as a Clean Unit under paragraph (x)(3)(iii) of this section using an existing control technology, the Clean Unit designation expires 10 years after the effective date; or, it expires any time the owner or operator fails to comply with the provisions for maintaining the Clean Unit

designation in paragraph (x)(7) of this section.

(6) *Required title V permit content for a Clean Unit.* After the effective date of the Clean Unit designation, and in accordance with the provisions of the applicable title V permit program under part 70 or part 71 of this chapter, but no later than when the title V permit is renewed, the title V permit for the major stationary source must include the following terms and conditions in paragraphs (x)(6)(i) through (vi) of this section related to the Clean Unit.

(i) A statement indicating that the emissions unit qualifies as a Clean Unit and identifying the pollutant(s) for which this designation applies.

(ii) *The effective date of the Clean Unit designation.* If this date is not known when the Clean Unit designation is initially recorded in the title V permit (*e.g.,* because the air pollution control technology is not yet in service), the permit must describe the event that will determine the effective date (*e.g.,* the date the control technology is placed into service). Once the effective date is determined, the owner or operator must notify the Administrator of the exact date. This specific effective date must be added to the source's title V permit at the first opportunity, such as a modification, revision, reopening, or renewal of the title V permit for any reason, whichever comes first, but in no case later than the next renewal.

(iii) *The expiration date of the Clean Unit designation.* If this date is not known when the Clean Unit designation is initially recorded into the title V permit (*e.g.,* because the air pollution control technology is not yet in service), then the permit must describe the event that will determine the expiration date (*e.g.,* the date the control technology is placed into service). Once the expiration date is determined, the owner or operator must notify the Administrator of the exact date. The expiration date must be added to the source's title V permit at the first opportunity, such as a modification, revision, reopening, or renewal of the title V permit for any reason, whichever comes first, but in no case later than the next renewal.

(iv) All emission limitations and work practice requirements adopted in conjunction with BACT, and any physical or operational characteristics which formed the basis for the BACT determination (*e.g.,* possibly the emissions unit's capacity or throughput).

(v) Monitoring, recordkeeping, and reporting requirements as necessary to demonstrate that the emissions unit continues to meet the criteria for maintaining the Clean Unit designation. (See paragraph (x)(7) of this section.)

(vi) Terms reflecting the owner or operator's duties to maintain the Clean Unit designation and the consequences of failing to do so, as presented in paragraph (x)(7) of this section.

(7) *Maintaining the Clean Unit designation.* To maintain the Clean Unit designation, the owner or operator must conform to all the restrictions listed in paragraphs (x)(7)(i) through (iii) of this section. This paragraph (x)(7) applies independently to each pollutant for which the emissions unit has the Clean Unit designation. That is, failing to conform to the restrictions for one pollutant affects the Clean Unit designation only for that pollutant.

(i) The Clean Unit must comply with the emission limitation(s) and/or work practice requirements adopted in conjunction with the BACT that is recorded in the major NSR permit, and subsequently reflected in the title V permit. The owner or operator may not make a physical change in or change in the method of operation of the Clean Unit that causes the emissions unit to function in a manner that is inconsistent with the physical or operational characteristics that formed the basis for the BACT determination (*e.g.,* possibly the emissions unit's capacity or throughput).

(ii) The Clean Unit must comply with any terms and conditions in the title V permit related to the unit's Clean Unit designation.

(iii) The Clean Unit must continue to control emissions using the specific air pollution control technology that was the basis for its Clean Unit designation. If the emissions unit or control technology is replaced, then the Clean Unit designation ends.

(8) *Netting at Clean Units.* Emissions changes that occur at a Clean Unit must not be included in calculating a

significant net emissions increase (that is, must not be used in a "netting analysis"), unless such use occurs before the effective date of the Clean Unit designation, or after the Clean Unit designation expires; or, unless the emissions unit reduces emissions below the level that qualified the unit as a Clean Unit. However, if the Clean Unit reduces emissions below the level that qualified the unit as a Clean Unit, then the owner or operator may generate a credit for the difference between the level that qualified the unit as a Clean Unit and the new emissions limit if such reductions are surplus, quantifiable, and permanent. For purposes of generating offsets, the reductions must also be federally enforceable. For purposes of determining creditable net emissions increases and decreases, the reductions must also be enforceable as a practical matter.

(9) *Effect of redesignation on the Clean Unit designation.* The Clean Unit designation of an emissions unit is not affected by re-designation of the attainment status of the area in which it is located. That is, if a Clean Unit is located in an attainment area and the area is redesignated to nonattainment, its Clean Unit designation is not affected. Similarly, redesignation from nonattainment to attainment does not affect the Clean Unit designation. However, if an existing Clean Unit designation expires, it must re-qualify under the requirements that are currently applicable in the area.

(y) *Clean Unit provisions for emissions units that achieve an emission limitation comparable to BACT.* An owner or operator of a major stationary source has the option of using the Clean Unit Test to determine whether emissions increases at a Clean Unit are part of a project that is a major modification according to the provisions in paragraphs (y)(1) through (11) of this section.

(1) *Applicability.* The provisions of this paragraph (y) apply to emissions units which do not qualify as Clean Units under paragraph (x) of this section, but which are achieving a level of emissions control comparable to BACT, as determined by the Administrator in accordance with this paragraph (y).

(2) *General provisions for Clean Units.* The provisions in paragraphs (y)(2)(i) through (iv) of this section apply to a Clean Unit (designated under this paragraph (y)).

(i) Any project for which the owner or operator begins actual construction after the effective date of the Clean Unit designation (as determined in accordance with paragraph (y)(5) of this section) and before the expiration date (as determined in accordance with paragraph (y)(6) of this section) will be considered to have occurred while the emissions unit was a Clean Unit.

(ii) If a project at a Clean Unit does not cause the need for a change in the emission limitations or work practice requirements in the permit for the unit that have been determined (pursuant to paragraph (y)(4) of this section) to be comparable to BACT, and the project would not alter any physical or operational characteristics that formed the basis for determining that the emissions unit's control technology achieves a level of emissions control comparable to BACT as specified in paragraph (y)(8)(iv) of this section, the emissions unit remains a Clean Unit.

(iii) If a project causes the need for a change in the emission limitations or work practice requirements in the permit for the unit that have been determined (pursuant to paragraph (y)(4) of this section) to be comparable to BACT, or the project would alter any physical or operational characteristics that formed the basis for determining that the emissions unit's control technology achieves a level of emissions control comparable to BACT as specified in paragraph (y)(8)(iv) of this section, then the emissions unit loses its designation as a Clean Unit upon issuance of the necessary permit revisions (unless the unit re-qualifies as a Clean Unit pursuant to paragraph (u)(3)(iv) of this section). If the owner or operator begins actual construction on the project without first applying to revise the emissions unit's permit, the Clean Unit designation ends immediately prior to the time when actual construction begins.

(iv) A project that causes an emissions unit to lose its designation as a Clean Unit is subject to the applicability requirements of paragraphs

(a)(2)(iv)(*a*) through (*d*) and paragraph (a)(2)(iv)(*f*) of this section as if the emissions unit is not a Clean Unit.

(3) *Qualifying or re-qualifying to use the Clean Unit applicability test.* An emissions unit qualifies as a Clean Unit when the unit meets the criteria in paragraphs (y)(3)(i) through (iii) of this section. After the original Clean Unit designation expires in accordance with paragraph (y)(6) of this section or is lost pursuant to paragraph (y)(2)(iii) of this section, such emissions unit may re-qualify as a Clean Unit under either paragraph (y)(3)(iv) of this section, or under the Clean Unit provisions in paragraph (x) of this section. To re-qualify as a Clean Unit under paragraph (y)(3)(iv) of this section, the emissions unit must obtain a new permit issued pursuant to the requirements in paragraphs (y)(7) and (8) of this section and meet all the criteria in paragraph (y)(3)(iv) of this section. The Administrator will make a separate Clean Unit designation for each pollutant emitted by the emissions unit for which the emissions unit qualifies as a Clean Unit.

(i) *Qualifying air pollution control technologies.* Air pollutant emissions from the emissions unit must be reduced through the use of air pollution control technology (which includes pollution prevention as defined under paragraph (b)(39) of this section or work practices) that meets both the following requirements in paragraphs (y)(3)(i)(*a*) and (*b*) of this section.

(*a*) The owner or operator has demonstrated that the emissions unit's control technology is comparable to BACT according to the requirements of paragraph (y)(4) of this section. However, the emissions unit is not eligible for a Clean Unit designation if its emissions are not reduced below the level of a standard, uncontrolled emissions unit of the same type (*e.g.*, if the BACT determinations to which it is compared have resulted in a determination that no control measures are required).

(*b*) The owner or operator made an investment to install the control technology. For the purpose of this determination, an investment includes expenses to research the application of a pollution prevention technique to the emissions unit or to retool the unit to apply a pollution prevention technique.

(ii) *Impact of emissions from the unit.* The Administrator must determine that the allowable emissions from the emissions unit will not cause or contribute to a violation of any national ambient air quality standard or PSD increment, or adversely impact an air quality related value (such as visibility) that has been identified for a Federal Class I area by a Federal Land Manager and for which information is available to the general public.

(iii) *Date of installation.* An emissions unit may qualify as a Clean Unit even if the control technology, on which the Clean Unit designation is based, was installed before March 3, 2003. However, for such emissions units, the owner or operator must apply for the Clean Unit designation before December 31, 2004. For technologies installed on and after March 3, 2003, the owner or operator must apply for the Clean Unit designation at the time the control technology is installed.

(iv) *Re-qualifying as a Clean Unit.* The emissions unit must obtain a new permit (pursuant to requirements in paragraphs (y)(7) and (8) of this section) that demonstrates that the emissions unit's control technology is achieving a level of emission control comparable to current-day BACT, and the emissions unit must meet the requirements in paragraphs (y)(3)(i)(a) and (y)(3)(ii) of this section.

(4) *Demonstrating control effectiveness comparable to BACT.* The owner or operator may demonstrate that the emissions unit's control technology is comparable to BACT for purposes of paragraph (y)(3)(i) of this section according to either paragraph (y)(4)(i) or (ii) of this section. Paragraph (y)(4)(iii) of this section specifies the time for making this comparison.

(i) *Comparison to previous BACT and LAER determinations.* The Administrator maintains an on-line data base of previous determinations of RACT, BACT, and LAER in the RACT/BACT/LAER Clearinghouse (RBLC). The emissions unit's control technology is presumed to be comparable to BACT if it achieves an emission limitation that is equal to or better than the average of the emission limitations achieved by

all the sources for which a BACT or LAER determination has been made within the preceding 5 years and entered into the RBLC, and for which it is technically feasible to apply the BACT or LAER control technology to the emissions unit. The Administrator shall also compare this presumption to any additional BACT or LAER determinations of which he or she is aware, and shall consider any information on achieved-in-practice pollution control technologies provided during the public comment period, to determine whether any presumptive determination that the control technology is comparable to BACT is correct.

(ii) *The substantially-as-effective test.* The owner or operator may demonstrate that the emissions unit's control technology is substantially as effective as BACT. In addition, any other person may present evidence related to whether the control technology is substantially as effective as BACT during the public participation process required under paragraph (y)(7) of this section. The Administrator shall consider such evidence on a case-by-case basis and determine whether the emissions unit's air pollution control technology is substantially as effective as BACT.

(iii) *Time of comparison.* (*a*) *Emissions units with control technologies that are installed before March 3, 2003.* The owner or operator of an emissions unit whose control technology is installed before March 3, 2003 may, at its option, either demonstrate that the emission limitation achieved by the emissions unit's control technology is comparable to the BACT requirements that applied at the time the control technology was installed, or demonstrate that the emission limitation achieved by the emissions unit's control technology is comparable to current-day BACT requirements. The expiration date of the Clean Unit designation will depend on which option the owner or operator uses, as specified in paragraph (y)(6) of this section.

(*b*) *Emissions units with control technologies that are installed on and after March 3, 2003.* The owner or operator must demonstrate that the emission limitation achieved by the emissions unit's control technology is comparable to current-day BACT requirements.

(5) *Effective date of the Clean Unit designation.* The effective date of an emissions unit's Clean Unit designation (that is, the date on which the owner or operator may begin to use the Clean Unit Test to determine whether a project involving the emissions unit is a major modification) is the date that the permit required by paragraph (y)(7) of this section is issued or the date that the emissions unit's air pollution control technology is placed into service, whichever is later.

(6) *Clean Unit expiration.* If the owner or operator demonstrates that the emission limitation achieved by the emissions unit's control technology is comparable to the BACT requirements that applied at the time the control technology was installed, then the Clean Unit designation expires 10 years from the date that the control technology was installed. For all other emissions units, the Clean Unit designation expires 10 years from the effective date of the Clean Unit designation, as determined according to paragraph (y)(5) of this section. In addition, for all emissions units, the Clean Unit designation expires any time the owner or operator fails to comply with the provisions for maintaining the Clean Unit designation in paragraph (y)(9) of this section.

(7) *Procedures for designating emissions units as Clean Units.* The Administrator shall designate an emissions unit a Clean Unit only by issuing a permit through a permitting program that has been approved by the Administrator and that conforms with the requirements of §§ 51.160 through 51.164 of this chapter including requirements for public notice of the proposed Clean Unit designation and opportunity for public comment. Such permit must also meet the requirements in paragraph (y)(8) of this section.

(8) *Required permit content.* The permit required by paragraph (y)(7) of this section shall include the terms and conditions set forth in paragraphs (y)(8)(i) through (vi) of this section. Such terms and conditions shall be incorporated into the major stationary source's title V permit in accordance with the provisions of the applicable

title V permit program under part 70 or part 71 of this chapter, but no later than when the title V permit is renewed.

(i) A statement indicating that the emissions unit qualifies as a Clean Unit and identifying the pollutant(s) for which this designation applies.

(ii) *The effective date of the Clean Unit designation.* If this date is not known when the Administrator issues the permit (*e.g.,* because the air pollution control technology is not yet in service), then the permit must describe the event that will determine the effective date (*e.g.,* the date the control technology is placed into service). Once the effective date is known, then the owner or operator must notify the Administrator of the exact date. This specific effective date must be added to the source's title V permit at the first opportunity, such as a modification, revision, reopening, or renewal of the title V permit for any reason, whichever comes first, but in no case later than the next renewal.

(iii) The expiration date of the Clean Unit designation. If this date is not known when the Administrator issues the permit (*e.g.,* because the air pollution control technology is not yet in service), then the permit must describe the event that will determine the expiration date (*e.g.,* the date the control technology is placed into service). Once the expiration date is known, then the owner or operator must notify the Administrator of the exact date. The expiration date must be added to the source's title V permit at the first opportunity, such as a modification, revision, reopening, or renewal of the title V permit for any reason, whichever comes first, but in no case later than the next renewal.

(iv) All emission limitations and work practice requirements adopted in conjunction with emission limitations necessary to assure that the control technology continues to achieve an emission limitation comparable to BACT, and any physical or operational characteristics that formed the basis for determining that the emissions unit's control technology achieves a level of emissions control comparable to BACT (*e.g.,* possibly the emissions unit's capacity or throughput).

(v) Monitoring, recordkeeping, and reporting requirements as necessary to demonstrate that the emissions unit continues to meet the criteria for maintaining its Clean Unit designation. (See paragraph (y)(9) of this section.)

(vi) Terms reflecting the owner or operator's duties to maintain the Clean Unit designation and the consequences of failing to do so, as presented in paragraph (y)(9) of this section.

(9) *Maintaining a Clean Unit designation.* To maintain the Clean Unit designation, the owner or operator must conform to all the restrictions listed in paragraphs (y)(9)(i) through (v) of this section. This paragraph (y)(9) applies independently to each pollutant for which the Administrator has designated the emissions unit a Clean Unit. That is, failing to conform to the restrictions for one pollutant affects the Clean Unit designation only for that pollutant.

(i) The Clean Unit must comply with the emission limitation(s) and/or work practice requirements adopted to ensure that the control technology continues to achieve emission control comparable to BACT.

(ii) The owner or operator may not make a physical change in or change in the method of operation of the Clean Unit that causes the emissions unit to function in a manner that is inconsistent with the physical or operational characteristics that formed the basis for the determination that the control technology is achieving a level of emission control that is comparable to BACT (*e.g.,* possibly the emissions unit's capacity or throughput).

(iii) [Reserved]

(iv) The Clean Unit must comply with any terms and conditions in the title V permit related to the unit's Clean Unit designation.

(v) The Clean Unit must continue to control emissions using the specific air pollution control technology that was the basis for its Clean Unit designation. If the emissions unit or control technology is replaced, then the Clean Unit designation ends.

(10) *Netting at Clean Units.* Emissions changes that occur at a Clean Unit must not be included in calculating a significant net emissions increase (that

is, must not be used in a "netting analysis") unless such use occurs before March 3, 2003 or after the Clean Unit designation expires; or, unless the emissions unit reduces emissions below the level that qualified the unit as a Clean Unit. However, if the Clean Unit reduces emissions below the level that qualified the unit as a Clean Unit, then the owner or operator may generate a credit for the difference between the level that qualified the unit as a Clean Unit and the emissions unit's new emissions limit if such reductions are surplus, quantifiable, and permanent. For purposes of generating offsets, the reductions must also be federally enforceable. For purposes of determining creditable net emissions increases and decreases, the reductions must also be enforceable as a practical matter.

(11) *Effect of redesignation on a Clean Unit designation.* The Clean Unit designation of an emissions unit is not affected by redesignation of the attainment status of the area in which it is located. That is, if a Clean Unit is located in an attainment area and the area is redesignated to nonattainment, its Clean Unit designation is not affected. Similarly, redesignation from nonattainment to attainment does not affect the Clean Unit designation. However, if a Clean Unit's designation expires or is lost pursuant to paragraphs (x)(2)(iii) and (y)(2)(iii) of this section, it must re-qualify under the requirements that are currently applicable.

(z) *PCP exclusion procedural requirements.* PCPs shall be provided according to the provisions in paragraphs (z)(1) through (6) of this section.

(1) Before an owner or operator begins actual construction of a PCP, the owner or operator must either submit a notice to the Administrator if the project is listed in paragraphs (b)(32)(i) through (vi) of this section, or if the project is not listed in paragraphs (b)(32)(i) through (vi) of this section, then the owner or operator must submit a permit application and obtain approval to use the PCP exclusion from the Administrator consistent with the requirements in paragraph (z)(5) of this section. Regardless of whether the owner or operator submits a notice or a permit application, the project must meet the requirements in paragraph (z)(2) of this section, and the notice or permit application must contain the information required in paragraph (z)(3) of this section.

(2) Any project that relies on the PCP exclusion must meet the requirements of paragraphs (z)(2)(i) and (ii) of this section.

(i) *Environmentally beneficial analysis.* The environmental benefit from the emissions reductions of pollutants regulated under the Act must outweigh the environmental detriment of emissions increases in pollutants regulated under the Act. A statement that a technology from paragraphs (b)(32)(i) through (vi) of this section is being used shall be presumed to satisfy this requirement.

(ii) *Air quality analysis.* The emissions increases from the project will not cause or contribute to a violation of any national ambient air quality standard or PSD increment, or adversely impact an air quality related value (such as visibility) that has been identified for a Federal Class I area by a Federal Land Manager and for which information is available to the general public.

(3) *Content of notice or permit application.* In the notice or permit application sent to the Administrator, the owner or operator must include, at a minimum, the information listed in paragraphs (z)(3)(i) through (v) of this section.

(i) A description of the project.

(ii) The potential emissions increases and decreases of any pollutant regulated under the Act and the projected emissions increases and decreases using the methodology in paragraph (a)(2)(iv) of this section, that will result from the project, and a copy of the environmentally beneficial analysis required by paragraph (z)(2)(i) of this section.

(iii) A description of monitoring and recordkeeping, and all other methods, to be used on an ongoing basis to demonstrate that the project is environmentally beneficial. Methods should be sufficient to meet the requirements in part 70 and part 71 of this chapter.

(iv) A certification that the project will be designed and operated in a manner that is consistent with proper industry and engineering practices, in a

manner that is consistent with the environmentally beneficial analysis and air quality analysis required by paragraphs (z)(2)(i) and (ii) of this section, with information submitted in the notice or permit application, and in such a way as to minimize, within the physical configuration and operational standards usually associated with the emissions control device or strategy, emissions of collateral pollutants.

(v) Demonstration that the PCP will not have an adverse air quality impact (*e.g.,* modeling, screening level modeling results, or a statement that the collateral emissions increase is included within the parameters used in the most recent modeling exercise) as required by paragraph (z)(2)(ii) of this section. An air quality impact analysis is not required for any pollutant that will not experience a significant emissions increase as a result of the project.

(4) *Notice process for listed projects.* For projects listed in paragraphs (b)(32)(i) through (vi) of this section, the owner or operator may begin actual construction of the project immediately after notice is sent to the Administrator (unless otherwise prohibited under requirements of the applicable State Implementation Plan). The owner or operator shall respond to any requests by the Administrator for additional information that the Administrator determines is necessary to evaluate the suitability of the project for the PCP exclusion.

(5) *Permit process for unlisted projects.* Before an owner or operator may begin actual construction of a PCP project that is not listed in paragraphs (b)(32)(i) through (vi) of this section, the project must be approved by the Administrator and recorded in a State Implementation Plan-approved permit or title V permit using procedures that are consistent with §§51.160 and 51.161 of this chapter. This includes the requirement that the Administrator provide the public with notice of the proposed approval, with access to the environmentally beneficial analysis and the air quality analysis, and provide at least a 30-day period for the public and the Administrator to submit comments. The Administrator must address all material comments received by the end of the comment period before taking final action on the permit.

(6) *Operational requirements.* Upon installation of the PCP, the owner or operator must comply with the requirements of paragraphs (z)(6)(i) through (iv) of this section.

(i) *General duty.* The owner or operator must operate the PCP in a manner consistent with proper industry and engineering practices, in a manner that is consistent with the environmentally beneficial analysis and air quality analysis required by paragraphs (z)(2)(i) and (ii) of this section, with information submitted in the notice or permit application required by paragraph (z)(3) of this section, and in such a way as to minimize, within the physical configuration and operational standards usually associated with the emissions control device or strategy, emissions of collateral pollutants.

(ii) *Recordkeeping.* The owner or operator must maintain copies on site of the environmentally beneficial analysis, the air quality impacts analysis, and monitoring and other emission records to prove that the PCP operated consistent with the general duty requirements in paragraph (z)(6)(i) of this section.

(iii) *Permit requirements.* The owner or operator must comply with any provisions in the State Implementation Plan-approved permit or title V permit related to use and approval of the PCP exclusion.

(iv) *Generation of emission reduction credits.* Emission reductions created by a PCP shall not be included in calculating a significant net emissions increase unless the emissions unit further reduces emissions after qualifying for the PCP exclusion (*e.g.,* taking an operational restriction on the hours of operation). The owner or operator may generate a credit for the difference between the level of reduction which was used to qualify for the PCP exclusion and the new emissions limit if such reductions are surplus, quantifiable, and permanent. For purposes of generating offsets, the reductions must also be federally enforceable. For purposes of determining creditable net emissions increases and decreases, the reductions must also be enforceable as a practical matter.

(aa) *Actuals PALs.* The provisions in paragraphs (aa)(1) through (15) of this section govern actuals PALs.

(1) *Applicability.* (i) The Administrator may approve the use of an actuals PAL for any existing major stationary source if the PAL meets the requirements in paragraphs (aa)(1) through (15) of this section. The term "PAL" shall mean "actuals PAL" throughout paragraph (aa) of this section.

(ii) Any physical change in or change in the method of operation of a major stationary source that maintains its total source-wide emissions below the PAL level, meets the requirements in paragraphs (aa)(1) through (15) of this section, and complies with the PAL permit:

(*a*) Is not a major modification for the PAL pollutant;

(*b*) Does not have to be approved through the PSD program; and

(*c*) Is not subject to the provisions in paragraph (r)(4) of this section (restrictions on relaxing enforceable emission limitations that the major stationary source used to avoid applicability of the major NSR program).

(iii) Except as provided under paragraph (aa)(1)(ii)(*c*) of this section, a major stationary source shall continue to comply with all applicable Federal or State requirements, emission limitations, and work practice requirements that were established prior to the effective date of the PAL.

(2) *Definitions.* For the purposes of this section, the definitions in paragraphs (aa)(2)(i) through (xi) of this section apply. When a term is not defined in these paragraphs, it shall have the meaning given in paragraph (b) of this section or in the Act.

(i) *Actuals PAL* for a major stationary source means a PAL based on the baseline actual emissions (as defined in paragraph (b)(48) of this section) of all emissions units (as defined in paragraph (b)(7) of this section) at the source, that emit or have the potential to emit the PAL pollutant.

(ii) *Allowable emissions* means "allowable emissions" as defined in paragraph (b)(16) of this section, except as this definition is modified according to paragraphs (aa)(2)(ii)(*a*) and (*b*) of this section.

(*a*) The allowable emissions for any emissions unit shall be calculated considering any emission limitations that are enforceable as a practical matter on the emissions unit's potential to emit.

(*b*) An emissions unit's potential to emit shall be determined using the definition in paragraph (b)(4) of this section, except that the words "or enforceable as a practical matter" should be added after "federally enforceable."

(iii) *Small emissions unit* means an emissions unit that emits or has the potential to emit the PAL pollutant in an amount less than the significant level for that PAL pollutant, as defined in paragraph (b)(23) of this section or in the Act, whichever is lower.

(iv) *Major emissions unit* means:

(*a*) Any emissions unit that emits or has the potential to emit 100 tons per year or more of the PAL pollutant in an attainment area; or

(*b*) Any emissions unit that emits or has the potential to emit the PAL pollutant in an amount that is equal to or greater than the major source threshold for the PAL pollutant as defined by the Act for nonattainment areas. For example, in accordance with the definition of major stationary source in section 182(c) of the Act, an emissions unit would be a major emissions unit for VOC if the emissions unit is located in a serious ozone nonattainment area and it emits or has the potential to emit 50 or more tons of VOC per year.

(v) *Plantwide applicability limitation (PAL)* means an emission limitation expressed in tons per year, for a pollutant at a major stationary source, that is enforceable as a practical matter and established source-wide in accordance with paragraphs (aa)(1) through (15) of this section.

(vi) *PAL effective date* generally means the date of issuance of the PAL permit. However, the PAL effective date for an increased PAL is the date any emissions unit that is part of the PAL major modification becomes operational and begins to emit the PAL pollutant.

(vii) *PAL effective period* means the period beginning with the PAL effective date and ending 10 years later.

(viii) *PAL major modification* means, notwithstanding paragraphs (b)(2) and

(b)(3) of this section (the definitions for major modification and net emissions increase), any physical change in or change in the method of operation of the PAL source that causes it to emit the PAL pollutant at a level equal to or greater than the PAL.

(ix) *PAL permit* means the major NSR permit, the minor NSR permit, or the State operating permit under a program that is approved into the State Implementation Plan, or the title V permit issued by the Administrator that establishes a PAL for a major stationary source.

(x) *PAL pollutant* means the pollutant for which a PAL is established at a major stationary source.

(xi) *Significant emissions unit* means an emissions unit that emits or has the potential to emit a PAL pollutant in an amount that is equal to or greater than the significant level (as defined in paragraph (b)(23) of this section or in the Act, whichever is lower) for that PAL pollutant, but less than the amount that would qualify the unit as a major emissions unit as defined in paragraph (aa)(2)(iv) of this section.

(3) *Permit application requirements.* As part of a permit application requesting a PAL, the owner or operator of a major stationary source shall submit the following information to the Administrator for approval:

(i) A list of all emissions units at the source designated as small, significant or major based on their potential to emit. In addition, the owner or operator of the source shall indicate which, if any, Federal or State applicable requirements, emission limitations, or work practices apply to each unit.

(ii) Calculations of the baseline actual emissions (with supporting documentation). Baseline actual emissions are to include emissions associated not only with operation of the unit, but also emissions associated with startup, shutdown, and malfunction.

(iii) The calculation procedures that the major stationary source owner or operator proposes to use to convert the monitoring system data to monthly emissions and annual emissions based on a 12-month rolling total for each month as required by paragraph (aa)(13)(i) of this section.

(4) *General requirements for establishing PALs.* (i) The Administrator is allowed to establish a PAL at a major stationary source, provided that at a minimum, the requirements in paragraphs (aa)(4)(i)(a) through (g) of this section are met.

(*a*) The PAL shall impose an annual emission limitation in tons per year, that is enforceable as a practical matter, for the entire major stationary source. For each month during the PAL effective period after the first 12 months of establishing a PAL, the major stationary source owner or operator shall show that the sum of the monthly emissions from each emissions unit under the PAL for the previous 12 consecutive months is less than the PAL (a 12-month average, rolled monthly). For each month during the first 11 months from the PAL effective date, the major stationary source owner or operator shall show that the sum of the preceding monthly emissions from the PAL effective date for each emissions unit under the PAL is less than the PAL.

(*b*) The PAL shall be established in a PAL permit that meets the public participation requirements in paragraph (aa)(5) of this section.

(*c*) The PAL permit shall contain all the requirements of paragraph (aa)(7) of this section.

(*d*) The PAL shall include fugitive emissions, to the extent quantifiable, from all emissions units that emit or have the potential to emit the PAL pollutant at the major stationary source.

(*e*) Each PAL shall regulate emissions of only one pollutant.

(*f*) Each PAL shall have a PAL effective period of 10 years.

(*g*) The owner or operator of the major stationary source with a PAL shall comply with the monitoring, recordkeeping, and reporting requirements provided in paragraphs (aa)(12) through (14) of this section for each emissions unit under the PAL through the PAL effective period.

(ii) At no time (during or after the PAL effective period) are emissions reductions of a PAL pollutant that occur

during the PAL effective period creditable as decreases for purposes of offsets under § 51.165(a)(3)(ii) of this chapter unless the level of the PAL is reduced by the amount of such emissions reductions and such reductions would be creditable in the absence of the PAL.

(5) *Public participation requirements for PALs.* PALs for existing major stationary sources shall be established, renewed, or increased through a procedure that is consistent with §§ 51.160 and 51.161 of this chapter. This includes the requirement that the Administrator provide the public with notice of the proposed approval of a PAL permit and at least a 30-day period for submittal of public comment. The Administrator must address all material comments before taking final action on the permit.

(6) *Setting the 10-year actuals PAL level.* (i) Except as provided in paragraph (aa)(6)(ii) of this section, the plan shall provide that the actuals PAL level for a major stationary source shall be established as the sum of the baseline actual emissions (as defined in paragraph (b)(48) of this section) of the PAL pollutant for each emissions unit at the source; plus an amount equal to the applicable significant level for the PAL pollutant under paragraph (b)(23) of this section or under the Act, whichever is lower. When establishing the actuals PAL level, for a PAL pollutant, only one consecutive 24-month period must be used to determine the baseline actual emissions for all existing emissions units. However, a different consecutive 24-month period may be used for each different PAL pollutant. Emissions associated with units that were permanently shut down after this 24-month period must be subtracted from the PAL level. The reviewing authority shall specify a reduced PAL level(s) (in tons/yr) in the PAL permit to become effective on the future compliance date(s) of any applicable Federal or State regulatory requirement(s) that the reviewing authority is aware of prior to issuance of the PAL permit. For instance, if the source owner or operator will be required to reduce emissions from industrial boilers in half from baseline emissions of 60 ppm NO_X to a new rule limit of 30 ppm, then the permit shall contain a future effective PAL level that is equal to the current PAL level reduced by half of the original baseline emissions of such unit(s).

(ii) For newly constructed units (which do not include modifications to existing units) on which actual construction began after the 24-month period, in lieu of adding the baseline actual emissions as specified in paragraph (aa)(6)(i) of this section, the emissions must be added to the PAL level in an amount equal to the potential to emit of the units.

(7) *Contents of the PAL permit.* The PAL permit must contain, at a minimum, the information in paragraphs (aa)(7)(i) through (x) of this section.

(i) The PAL pollutant and the applicable source-wide emission limitation in tons per year.

(ii) The PAL permit effective date and the expiration date of the PAL (PAL effective period).

(iii) Specification in the PAL permit that if a major stationary source owner or operator applies to renew a PAL in accordance with paragraph (aa)(10) of this section before the end of the PAL effective period, then the PAL shall not expire at the end of the PAL effective period. It shall remain in effect until a revised PAL permit is issued by a reviewing authority.

(iv) A requirement that emission calculations for compliance purposes must include emissions from startups, shutdowns, and malfunctions.

(v) A requirement that, once the PAL expires, the major stationary source is subject to the requirements of paragraph (aa)(9) of this section.

(vi) The calculation procedures that the major stationary source owner or operator shall use to convert the monitoring system data to monthly emissions and annual emissions based on a 12-month rolling total as required by paragraph (aa)(13)(i) of this section.

(vii) A requirement that the major stationary source owner or operator monitor all emissions units in accordance with the provisions under paragraph (aa)(12) of this section.

(viii) A requirement to retain the records required under paragraph (aa)(13) of this section on site. Such

records may be retained in an electronic format.

(ix) A requirement to submit the reports required under paragraph (aa)(14) of this section by the required deadlines.

(x) Any other requirements that the Administrator deems necessary to implement and enforce the PAL.

(8) *PAL effective period and reopening of the PAL permit.* The requirements in paragraphs (aa)(8)(i) and (ii) of this section apply to actuals PALs.

(i) *PAL effective period.* The Administrator shall specify a PAL effective period of 10 years.

(ii) *Reopening of the PAL permit.*

(*a*) During the PAL effective period, the Administrator must reopen the PAL permit to:

(*1*) Correct typographical/calculation errors made in setting the PAL or reflect a more accurate determination of emissions used to establish the PAL;

(*2*) Reduce the PAL if the owner or operator of the major stationary source creates creditable emissions reductions for use as offsets under §51.165(a)(3)(ii) of this chapter; and

(*3*) Revise the PAL to reflect an increase in the PAL as provided under paragraph (aa)(11) of this section.

(*b*) The Administrator shall have discretion to reopen the PAL permit for the following:

(*1*) Reduce the PAL to reflect newly applicable Federal requirements (for example, NSPS) with compliance dates after the PAL effective date;

(*2*) Reduce the PAL consistent with any other requirement, that is enforceable as a practical matter, and that the State may impose on the major stationary source under the State Implementation Plan; and

(*3*) Reduce the PAL if the reviewing authority determines that a reduction is necessary to avoid causing or contributing to a NAAQS or PSD increment violation, or to an adverse impact on an air quality related value that has been identified for a Federal Class I area by a Federal Land Manager and for which information is available to the general public.

(*c*) Except for the permit reopening in paragraph (aa)(8)(ii)(*a*)(*1*) of this section for the correction of typographical/calculation errors that do not increase the PAL level, all other reopenings shall be carried out in accordance with the public participation requirements of paragraph (aa)(5) of this section.

(9) *Expiration of a PAL.* Any PAL that is not renewed in accordance with the procedures in paragraph (aa)(10) of this section shall expire at the end of the PAL effective period, and the requirements in paragraphs (aa)(9)(i) through (v) of this section shall apply.

(i) Each emissions unit (or each group of emissions units) that existed under the PAL shall comply with an allowable emission limitation under a revised permit established according to the procedures in paragraphs (aa)(9)(i)(*a*) and (*b*) of this section.

(*a*) Within the time frame specified for PAL renewals in paragraph (aa)(10)(ii) of this section, the major stationary source shall submit a proposed allowable emission limitation for each emissions unit (or each group of emissions units, if such a distribution is more appropriate as decided by the Administrator) by distributing the PAL allowable emissions for the major stationary source among each of the emissions units that existed under the PAL. If the PAL had not yet been adjusted for an applicable requirement that became effective during the PAL effective period, as required under paragraph (aa)(10)(v) of this section, such distribution shall be made as if the PAL had been adjusted.

(*b*) The Administrator shall decide whether and how the PAL allowable emissions will be distributed and issue a revised permit incorporating allowable limits for each emissions unit, or each group of emissions units, as the Administrator determines is appropriate.

(ii) Each emissions unit(s) shall comply with the allowable emission limitation on a 12-month rolling basis. The Administrator may approve the use of monitoring systems (source testing, emission factors, etc.) other than CEMS, CERMS, PEMS, or CPMS to demonstrate compliance with the allowable emission limitation.

(iii) Until the Administrator issues the revised permit incorporating allowable limits for each emissions unit, or

each group of emissions units, as required under paragraph (aa)(9)(i)(*b*) of this section, the source shall continue to comply with a source-wide, multi-unit emissions cap equivalent to the level of the PAL emission limitation.

(iv) Any physical change or change in the method of operation at the major stationary source will be subject to major NSR requirements if such change meets the definition of major modification in paragraph (b)(2) of this section.

(v) The major stationary source owner or operator shall continue to comply with any State or Federal applicable requirements (BACT, RACT, NSPS, etc.) that may have applied either during the PAL effective period or prior to the PAL effective period except for those emission limitations that had been established pursuant to paragraph (r)(4) of this section, but were eliminated by the PAL in accordance with the provisions in paragraph (aa)(1)(ii)(*c*) of this section.

(10) *Renewal of a PAL.* (i) The Administrator shall follow the procedures specified in paragraph (aa)(5) of this section in approving any request to renew a PAL for a major stationary source, and shall provide both the proposed PAL level and a written rationale for the proposed PAL level to the public for review and comment. During such public review, any person may propose a PAL level for the source for consideration by the Administrator.

(ii) *Application deadline.* A major stationary source owner or operator shall submit a timely application to the Administrator to request renewal of a PAL. A timely application is one that is submitted at least 6 months prior to, but not earlier than 18 months from, the date of permit expiration. This deadline for application submittal is to ensure that the permit will not expire before the permit is renewed. If the owner or operator of a major stationary source submits a complete application to renew the PAL within this time period, then the PAL shall continue to be effective until the revised permit with the renewed PAL is issued.

(iii) *Application requirements.* The application to renew a PAL permit shall contain the information required in paragraphs (aa)(10)(iii)(*a*) through (*d*) of this section.

(*a*) The information required in paragraphs (aa)(3)(i) through (iii) of this section.

(*b*) A proposed PAL level.

(*c*) The sum of the potential to emit of all emissions units under the PAL (with supporting documentation).

(*d*) Any other information the owner or operator wishes the Administrator to consider in determining the appropriate level for renewing the PAL.

(iv) *PAL adjustment.* In determining whether and how to adjust the PAL, the Administrator shall consider the options outlined in paragraphs (aa)(10)(iv)(*a*) and (*b*) of this section. However, in no case may any such adjustment fail to comply with paragraph (aa)(10)(iv)(*c*) of this section.

(*a*) If the emissions level calculated in accordance with paragraph (aa)(6) of this section is equal to or greater than 80 percent of the PAL level, the Administrator may renew the PAL at the same level without considering the factors set forth in paragraph (aa)(10)(iv)(*b*) of this section; or

(*b*) The Administrator may set the PAL at a level that he or she determines to be more representative of the source's baseline actual emissions, or that he or she determines to be more appropriate considering air quality needs, advances in control technology, anticipated economic growth in the area, desire to reward or encourage the source's voluntary emissions reductions, or other factors as specifically identified by the Administrator in his or her written rationale.

(*c*) Notwithstanding paragraphs (aa)(10)(iv)(a) and (b) of this section:

(*1*) If the potential to emit of the major stationary source is less than the PAL, the Administrator shall adjust the PAL to a level no greater than the potential to emit of the source; and

(*2*) The Administrator shall not approve a renewed PAL level higher than the current PAL, unless the major stationary source has complied with the provisions of paragraph (aa)(11) of this section (increasing a PAL).

(v) If the compliance date for a State or Federal requirement that applies to the PAL source occurs during the PAL

effective period, and if the Administrator has not already adjusted for such requirement, the PAL shall be adjusted at the time of PAL permit renewal or title V permit renewal, whichever occurs first.

(11) *Increasing a PAL during the PAL effective period.* (i) The Administrator may increase a PAL emission limitation only if the major stationary source complies with the provisions in paragraphs (aa)(11)(i)(*a*) through (*d*) of this section.

(*a*) The owner or operator of the major stationary source shall submit a complete application to request an increase in the PAL limit for a PAL major modification. Such application shall identify the emissions unit(s) contributing to the increase in emissions so as to cause the major stationary source's emissions to equal or exceed its PAL.

(*b*) As part of this application, the major stationary source owner or operator shall demonstrate that the sum of the baseline actual emissions of the small emissions units, plus the sum of the baseline actual emissions of the significant and major emissions units assuming application of BACT equivalent controls, plus the sum of the allowable emissions of the new or modified emissions unit(s) exceeds the PAL. The level of control that would result from BACT equivalent controls on each significant or major emissions unit shall be determined by conducting a new BACT analysis at the time the application is submitted, unless the emissions unit is currently required to comply with a BACT or LAER requirement that was established within the preceding 10 years. In such a case, the assumed control level for that emissions unit shall be equal to the level of BACT or LAER with which that emissions unit must currently comply.

(*c*) The owner or operator obtains a major NSR permit for all emissions unit(s) identified in paragraph (aa)(11)(i)(*a*) of this section, regardless of the magnitude of the emissions increase resulting from them (that is, no significant levels apply). These emissions unit(s) shall comply with any emissions requirements resulting from the major NSR process (for example, BACT), even though they have also become subject to the PAL or continue to be subject to the PAL.

(*d*) The PAL permit shall require that the increased PAL level shall be effective on the day any emissions unit that is part of the PAL major modification becomes operational and begins to emit the PAL pollutant.

(ii) The Administrator shall calculate the new PAL as the sum of the allowable emissions for each modified or new emissions unit, plus the sum of the baseline actual emissions of the significant and major emissions units (assuming application of BACT equivalent controls as determined in accordance with paragraph (aa)(11)(i)(*b*)), plus the sum of the baseline actual emissions of the small emissions units.

(iii) The PAL permit shall be revised to reflect the increased PAL level pursuant to the public notice requirements of paragraph (aa)(5) of this section.

(12) *Monitoring requirements for PALs.* (i) *General requirements.* (*a*) Each PAL permit must contain enforceable requirements for the monitoring system that accurately determines plantwide emissions of the PAL pollutant in terms of mass per unit of time. Any monitoring system authorized for use in the PAL permit must be based on sound science and meet generally acceptable scientific procedures for data quality and manipulation. Additionally, the information generated by such system must meet minimum legal requirements for admissibility in a judicial proceeding to enforce the PAL permit.

(*b*) The PAL monitoring system must employ one or more of the four general monitoring approaches meeting the minimum requirements set forth in paragraphs (aa)(12)(ii)(*a*) through (*d*) of this section and must be approved by the Administrator.

(*c*) Notwithstanding paragraph (aa)(12)(i)(*b*) of this section, you may also employ an alternative monitoring approach that meets paragraph (aa)(12)(i)(*a*) of this section if approved by the Administrator.

(*d*) Failure to use a monitoring system that meets the requirements of this section renders the PAL invalid.

(ii) Minimum performance requirements for approved monitoring approaches. The following are acceptable general monitoring approaches when conducted in accordance with the minimum requirements in paragraphs (aa)(12)(iii) through (ix) of this section:

(*a*) Mass balance calculations for activities using coatings or solvents;

(*b*) CEMS;

(*c*) CPMS or PEMS; and

(*d*) Emission factors.

(iii) *Mass balance calculations.* An owner or operator using mass balance calculations to monitor PAL pollutant emissions from activities using coating or solvents shall meet the following requirements:

(*a*) Provide a demonstrated means of validating the published content of the PAL pollutant that is contained in or created by all materials used in or at the emissions unit;

(*b*) Assume that the emissions unit emits all of the PAL pollutant that is contained in or created by any raw material or fuel used in or at the emissions unit, if it cannot otherwise be accounted for in the process; and

(*c*) Where the vendor of a material or fuel, which is used in or at the emissions unit, publishes a range of pollutant content from such material, the owner or operator must use the highest value of the range to calculate the PAL pollutant emissions unless the Administrator determines there is site-specific data or a site-specific monitoring program to support another content within the range.

(iv) *CEMS.* An owner or operator using CEMS to monitor PAL pollutant emissions shall meet the following requirements:

(*a*) CEMS must comply with applicable Performance Specifications found in 40 CFR part 60, appendix B; and

(*b*) CEMS must sample, analyze and record data at least every 15 minutes while the emissions unit is operating.

(v) *CPMS or PEMS.* An owner or operator using CPMS or PEMS to monitor PAL pollutant emissions shall meet the following requirements:

(*a*) The CPMS or the PEMS must be based on current site-specific data demonstrating a correlation between the monitored parameter(s) and the PAL pollutant emissions across the range of operation of the emissions unit; and

(*b*) Each CPMS or PEMS must sample, analyze, and record data at least every 15 minutes, or at another less frequent interval approved by the Administrator, while the emissions unit is operating.

(vi) *Emission factors.* An owner or operator using emission factors to monitor PAL pollutant emissions shall meet the following requirements:

(*a*) All emission factors shall be adjusted, if appropriate, to account for the degree of uncertainty or limitations in the factors' development;

(*b*) The emissions unit shall operate within the designated range of use for the emission factor, if applicable; and

(*c*) If technically practicable, the owner or operator of a significant emissions unit that relies on an emission factor to calculate PAL pollutant emissions shall conduct validation testing to determine a site-specific emission factor within 6 months of PAL permit issuance, unless the Administrator determines that testing is not required.

(vii) A source owner or operator must record and report maximum potential emissions without considering enforceable emission limitations or operational restrictions for an emissions unit during any period of time that there is no monitoring data, unless another method for determining emissions during such periods is specified in the PAL permit.

(viii) Notwithstanding the requirements in paragraphs (aa)(12)(iii) through (vii) of this section, where an owner or operator of an emissions unit cannot demonstrate a correlation between the monitored parameter(s) and the PAL pollutant emissions rate at all operating points of the emissions unit, the Administrator shall, at the time of permit issuance:

(*a*) Establish default value(s) for determining compliance with the PAL based on the highest potential emissions reasonably estimated at such operating point(s); or

(*b*) Determine that operation of the emissions unit during operating conditions when there is no correlation between monitored parameter(s) and the

PAL pollutant emissions is a violation of the PAL.

(ix) *Re-validation.* All data used to establish the PAL pollutant must be re-validated through performance testing or other scientifically valid means approved by the Administrator. Such testing must occur at least once every 5 years after issuance of the PAL.

(13) *Recordkeeping requirements.* (i) The PAL permit shall require an owner or operator to retain a copy of all records necessary to determine compliance with any requirement of paragraph (aa) of this section and of the PAL, including a determination of each emissions unit's 12-month rolling total emissions, for 5 years from the date of such record.

(ii) The PAL permit shall require an owner or operator to retain a copy of the following records for the duration of the PAL effective period plus 5 years:

(*a*) A copy of the PAL permit application and any applications for revisions to the PAL; and

(*b*) Each annual certification of compliance pursuant to title V and the data relied on in certifying the compliance.

(14) *Reporting and notification requirements.* The owner or operator shall submit semi-annual monitoring reports and prompt deviation reports to the Administrator in accordance with the applicable title V operating permit program. The reports shall meet the requirements in paragraphs (aa)(14)(i) through (iii) of this section.

(i) *Semi-annual report.* The semi-annual report shall be submitted to the Administrator within 30 days of the end of each reporting period. This report shall contain the information required in paragraphs (aa)(14)(i)(*a*) through (*g*) of this section.

(*a*) The identification of owner and operator and the permit number.

(*b*) Total annual emissions (tons/year) based on a 12-month rolling total for each month in the reporting period recorded pursuant to paragraph (aa)(13)(i) of this section.

(*c*) All data relied upon, including, but not limited to, any Quality Assurance or Quality Control data, in calculating the monthly and annual PAL pollutant emissions.

(*d*) A list of any emissions units modified or added to the major stationary source during the preceding 6-month period.

(*e*) The number, duration, and cause of any deviations or monitoring malfunctions (other than the time associated with zero and span calibration checks), and any corrective action taken.

(*f*) A notification of a shutdown of any monitoring system, whether the shutdown was permanent or temporary, the reason for the shutdown, the anticipated date that the monitoring system will be fully operational or replaced with another monitoring system, and whether the emissions unit monitored by the monitoring system continued to operate, and the calculation of the emissions of the pollutant or the number determined by method included in the permit, as provided by (aa)(12)(vii).

(*g*) A signed statement by the responsible official (as defined by the applicable title V operating permit program) certifying the truth, accuracy, and completeness of the information provided in the report.

(ii) *Deviation report.* The major stationary source owner or operator shall promptly submit reports of any deviations or exceedance of the PAL requirements, including periods where no monitoring is available. A report submitted pursuant to §70.6(a)(3)(iii)(B) of this chapter shall satisfy this reporting requirement. The deviation reports shall be submitted within the time limits prescribed by the applicable program implementing §70.6(a)(3)(iii)(B) of this chapter. The reports shall contain the following information:

(*a*) The identification of owner and operator and the permit number;

(*b*) The PAL requirement that experienced the deviation or that was exceeded;

(*c*) Emissions resulting from the deviation or the exceedance; and

(*d*) A signed statement by the responsible official (as defined by the applicable title V operating permit program) certifying the truth, accuracy, and completeness of the information provided in the report.

(iii) *Re-validation results.* The owner or operator shall submit to the Administrator the results of any re-validation test or method within 3 months after completion of such test or method.

(15) *Transition requirements.*

(i) The Administrator may not issue a PAL that does not comply with the requirements in paragraphs (aa)(1) through (15) of this section after March 3, 2003.

(ii) The Administrator may supersede any PAL that was established prior to March 3, 2003 with a PAL that complies with the requirements of paragraphs (aa)(1) through (15) of this section.

(bb) If any provision of this section, or the application of such provision to any person or circumstance, is held invalid, the remainder of this section, or the application of such provision to persons or circumstances other than those as to which it is held invalid, shall not be affected thereby.

(cc) Without regard to other considerations, routine maintenance, repair and replacement includes, but is not limited to, the replacement of any component of a process unit with an identical or functionally equivalent component(s), and maintenance and repair activities that are part of the replacement activity, provided that all of the requirements in paragraphs (cc)(1) through (3) of this section are met.

(1) *Capital cost threshold for equipment replacement.* (i) For an *electric utility steam generating unit,* as defined in § 52.21(b)(31), the fixed capital cost of the replacement component(s) plus the cost of any associated maintenance and repair activities that are part of the replacement shall not exceed 20 percent of the replacement value of the process unit, at the time the equipment is replaced. For a process unit that is not an electric utility steam generating unit the fixed capital cost of the replacement component(s) plus the cost of any associated maintenance and repair activities that are part of the replacement shall not exceed 20 percent of the replacement value of the process unit, at the time the equipment is replaced.

(ii) In determining the replacement value of the process unit; and, except as otherwise allowed under paragraph (cc)(1)(iii) of this section, the owner or operator shall determine the replacement value of the process unit on an estimate of the fixed capital cost of constructing a new process unit, or on the current appraised value of the process unit.

(iii) As an alternative to paragraph (cc)(1)(ii) of this section for determining the replacement value of a process unit, an owner or operator may choose to use insurance value (where the insurance value covers only complete replacement), investment value adjusted for inflation, or another accounting procedure if such procedure is based on Generally Accepted Accounting Principles, provided that the owner or operator sends a notice to the reviewing authority. The first time that an owner or operator submits such a notice for a particular process unit, the notice may be submitted at any time, but any subsequent notice for that process unit may be submitted only at the beginning of the process unit's fiscal year. Unless the owner or operator submits a notice to the reviewing authority, then paragraph (cc)(1)(ii) of this section will be used to establish the replacement value of the process unit. Once the owner or operator submits a notice to use an alternative accounting procedure, the owner or operator must continue to use that procedure for the entire fiscal year for that process unit. In subsequent fiscal years, the owner or operator must continue to use this selected procedure unless and until the owner or operator sends another notice to the reviewing authority selecting another procedure consistent with this paragraph or paragraph (cc)(1)(ii) of this section at the beginning of such fiscal year.

(2) *Basic design parameters.* The replacement does not change the basic design parameter(s) of the process unit to which the activity pertains.

(i) Except as provided in paragraph (cc)(2)(iii) of this section, for a process unit at a steam electric generating facility, the owner or operator may select as its basic design parameters either maximum hourly heat input and maximum hourly fuel consumption rate or maximum hourly electric output rate and maximum steam flow rate. When establishing fuel consumption specifications in terms of weight

or volume, the minimum fuel quality based on British Thermal Units content shall be used for determining the basic design parameter(s) for a coal-fired electric utility steam generating unit.

(ii) Except as provided in paragraph (cc)(2)(iii) of this section, the basic design parameter(s) for any process unit that is not at a steam electric generating facility are maximum rate of fuel or heat input, maximum rate of material input, or maximum rate of product output. Combustion process units will typically use maximum rate of fuel input. For sources having multiple end products and raw materials, the owner or operator should consider the primary product or primary raw material when selecting a basic design parameter.

(iii) If the owner or operator believes the basic design parameter(s) in paragraphs (cc)(2)(i) and (ii) of this section is not appropriate for a specific industry or type of process unit, the owner or operator may propose to the reviewing authority an alternative basic design parameter(s) for the source's process unit(s). If the reviewing authority approves of the use of an alternative basic design parameter(s), the reviewing authority shall issue a permit that is legally enforceable that records such basic design parameter(s) and requires the owner or operator to comply with such parameter(s).

(iv) The owner or operator shall use credible information, such as results of historic maximum capability tests, design information from the manufacturer, or engineering calculations, in establishing the magnitude of the basic design parameter(s) specified in paragraphs (cc)(2)(i) and (ii) of this section.

(v) If design information is not available for a process unit, then the owner or operator shall determine the process unit's basic design parameter(s) using the maximum value achieved by the process unit in the five-year period immediately preceding the planned activity.

(vi) Efficiency of a process unit is not a basic design parameter.

(3) The replacement activity shall not cause the process unit to exceed any emission limitation, or operational limitation that has the effect of constraining emissions, that applies to the process unit and that is legally enforceable.

NOTE TO PARAGRAPH (cc): By a court order on December 24, 2003, this paragraph (cc) is stayed indefinitely. The stayed provisions will become effective immediately if the court terminates the stay. At that time, EPA will publish a document in the FEDERAL REGISTER advising the public of the termination of the stay.

[43 FR 26403, June 19, 1978]

EDITORIAL NOTE: For FEDERAL REGISTER citations affecting §52.21, see the List of CFR Sections Affected, which appears in the Finding Aids section of the printed volume and on GPO Access.

§52.23 Violation and enforcement.

Failure to comply with any provisions of this part, or with any approved regulatory provision of a State implementation plan, or with any permit condition or permit denial issued pursuant to approved or promulgated regulations for the review of new or modified stationary or indirect sources, or with any permit limitation or condition contained within an operating permit issued under an EPA-approved program that is incorporated into the State implementation plan, shall render the person or governmental entity so failing to comply in violation of a requirement of an applicable implementation plan and subject to enforcement action under section 113 of the Clean Air Act. With regard to compliance schedules, a person or Governmental entity will be considered to have failed to comply with the requirements of this part if it fails to timely submit any required compliance schedule, if the compliance schedule when submitted does not contain each of the elements it is required to contain, or if the person or Governmental entity fails to comply with such schedule.

[39 FR 33512, Sept. 18, 1974, as amended at 54 FR 27285, June 28, 1989]

§52.24 Statutory restriction on new sources.

(a) After June 30, 1979, no major stationary source shall be constructed or modified in any nonattainment area as designated in 40 CFR part 81, subpart C ("nonattainment area") to which any

State implementation plan applies, if the emissions from suy will cause or contribute to concentrations of any pollutant for which a national ambient air quality standard is exceeded in such area, unless, as of the time of application for a permit for such construction, such plan meets the requirements of Part D, Title I, of the Clean Air Act, as amended (42 U.S.C. 7501 *et seq.*) ("Part D"). This section shall not apply to any nonattainment area once EPA has fully approved the State implementation plan for the area as meeting the requirements of Part D.

(b) For any nonattainment area for which the SIP satisfies the requirements of Part D, permits to construct and operate new or modified major stationary sources may be issued only if the applicable SIP is being carried out for the nonattainment area in which the proposed source is to be constructed or modified in accordance with the requirements of Part D.

(c) The Emission Offset Interpretative Ruling, 40 CFR part 51, Appendix S ("Offset Ruling"), rather than paragraphs (a) and (b), governs permits to construct and operate applied for before the deadline for having a revised SIP in effect that satisfies Part D. This deadline is July 1, 1979, for areas designated as nonattainment on March 3, 1978 (42 FR 8962). The revised SIP, rather than paragraph (a) of this section, governs permits applied for during a period when the revised SIP is in compliance with Part D.

(d) The restrictions in paragraphs (a) and (b) apply only to major stationary sources of emissions that cause or contribute to concentrations of the pollutant for which the nonattainment area was designated as nonattainment, and for which the SIP does not meet the requirements of Part D or is not being carried out in accordance with the requirements of Part D.

(e) For any area designated as nonattainment for any national ambient air quality standard, the restrictions in paragraphs (a) and (b) of this section, shall apply to any major stationary source or major modification that would be major for the pollutant for which the area is designated nonattainment, if the stationary source or major modification would be constructed anywhere in the designated nonattainment areas. A major stationary source or major modification that is major for volatile organic compounds is also major for ozone.

(f) The following definitions shall apply under this section.

(1) *Stationary source* means any building, structure, facility, or installation which emits or may emit any air pollutant subject to regulation under the Act.

(2) *Building, structure, facility or installation* means all of the pollutant-emitting activities which belong to the same industrial grouping, are located on one or more contiguous or adjacent properties, and are under the control of the same person (or persons under common control) except the activities of any vessel. Pollutant-emitting activities shall be considered as part of the same industrial grouping if they belong to the same "Major Group" (i.e., which have the same two-digit code) as described in the following document, *Standard Industrial Classification Manual, 1972,* as amended by the 1977 Supplement (U.S. Government Printing Office stock numbers 4101–0066 and 003–005–00176–0, respectively).

(3) *Potential to emit* means the maximum capacity of a stationary source to emit a pollutant under its physical and operational design. Any physical or operational limitation on the capacity of the source to emit a pollutant, including air pollution control equipment and restrictions on hours of operation or on amount of material combusted, stored, or processed, shall be treated as part of its design only if the limitation or the effect it would have on emissions is federally enforceable. Secondary emissions do not count in determining the potential to emit of a stationary source.

(4)(i) *Major stationary source* means:

(*a*) Any stationary source of air pollutants which emits, or has the potential to emit, 100 tons per year or more of any pollutant subject to regulation under the Act; or

(*b*) Any physical change that would occur at a stationary source not qualifying under paragraph (f)(5)(i)(*a)* of this section, as a major stationary source, if the change would constitute a major stationary source by itself.

(ii) A major stationary source that is major for volatile organic compounds shall be considered major for ozone.

(iii) The fugitive emissions of a stationary source shall not be included in determining for any of the purposes of this section whether it is a major stationary source, unless the source belongs to one of the following categories of stationary sources:

(*a*) Coal cleaning plants (with thermal dryers);

(*b*) Kraft pulp mills;

(*c*) Portland cement plants;

(*d*) Primary zinc smelters;

(*e*) Iron and steel mills;

(*f*) Primary aluminum ore reduction plants;

(*g*) Primary copper smelters;

(*h*) Municipal incinerators capable of charging more than 250 tons of refuse per day;

(*i*) Hydrofluoric, sulfuric, or nitric acid plants;

(*j*) Petroleum refineries;

(*k*) Lime plants;

(*l*) Phosphate rock processing plants;

(*m*) Coke oven batteries;

(*n*) Sulfur recovery plants;

(*o*) Carbon black plants (furnace process);

(*p*) Primary lead smelters;

(*q*) Fuel conversion plants;

(*r*) Sintering plants;

(*s*) Secondary metal production plants;

(*t*) Chemical process plants;

(*u*) Fossil-fuel boilers (or combination thereof) totaling more than 250 million British thermal units per hour heat input;

(*v*) Petroleum storage and transfer units with a total storage capacity exceeding 300,000 barrels;

(*w*) Taconite ore processing plants;

(*x*) Glass fiber processing plants;

(*y*) Charcoal production plants;

(*z*) Fossil fuel-fired steam electric plants of more than 250 million British thermal units per hour heat input;

(*aa*) Any other stationary source category which, as of August 7, 1980, is being regulated under section 111 or 112 of the Act.

(5)(i) *Major modification* means any physical change in or change in the method of operation of a major stationary source that would result in a significant net emissions increase of any pollutant subject to regulation under the Act.

(ii) Any net emissions increase that is considered significant for volatile organic compounds shall be considered significant for ozone.

(iii) A physical change or change in the method of operation shall not include:

(*a*) Routine maintenance, repair, and replacement;

(*b*) Use of an alternative fuel or raw material by reason of an order under sections 2 (a) and (b) of the Energy Supply and Environmental Coordination Act of 1974 (or any superseding legislation) or by reason of a natural gas curtailment plan pursuant to the Federal Power Act;

(*c*) Use of an alternative fuel by reason of an order or rule under section 125 of the Act;

(*d*) Use of an alternative fuel at a steam generating unit to the extent that the fuel is generated from municipal solid waste;

(*e*) Use of an alternative fuel or raw material by a stationary source which:

(*1*) The source was capable of accommodating before July 1, 1979, unless such change would be prohibited under any federally enforceable permit condition which was established after July 1, 1979 pursuant to 40 CFR 52.21 or under regulations approved pursuant to 40 CFR subpart I or 40 CFR 51.166; or

(*2*) The source is approved to use under any permit issued under regulations approved pursuant to 40 CFR subpart I;

(*f*) An increase in the hours of operation or in the production rate, unless such change is prohibited under any federally enforceable permit condition which was established after July 1, 1979 pursuant to 40 CFR 52.21 or under regulations approved pursuant to 40 CFR subpart I or 40 CFR 51.166.

(*g*) Any change in ownership at a stationary source.

(*h*) The addition, replacement or use of a pollution control project at an existing electric utility steam generating unit, unless the Administrator determines that such addition, replacement, or use renders the unit less environmentally beneficial, or except:

(*1*) When the Administrator has reason to believe that the pollution control project would reslt in a significant net increase in representative actual annual emissions of any criteria pollutant over levels used for that source in the most recent air quality impact analysis in the area conducted for the purpose of title I, if any, and

(*2*) The Administrator determines that the increase will cause or contribute to a violation of any national ambient air quality standard or PSD increment, or visibility limitation.

(*i*) The installation, operation, cessation, or removal of a temporary clean coal technology demonstration project, provided that the project complies with:

(*1*) The State implementation plan for the State in which the project is located, and

(*2*) Other requirements necessary to attain and maintain the national ambient air quality standards during the project and after it is terminated.

(6)(i) *Net emissions increase* means the amount by which the sum of the following exceeds zero:

(*a*) Any increase in actual emissions from a particular physical change or change in the method of operation at a stationary source; and

(*b*) Any other increases and decreases in actual emissions at the source that are contemporaneous with the particular change and are otherwise creditable.

(ii) An increase or decrease in actual emissions is contemporaneous with the increase from the particular change only if it occurs between:

(*a*) The date five years before construction on the particular change commences and

(*b*) The date that the increase from the particular change occurs.

(iii) An increase or decrease in actual emissions is creditable only if the Administrator has not relied on it in issuing a permit for the source under regulations approved pursuant to 40 CFR subpart I which permit is in effect when the increase in actual emissions from the particular change occurs.

(iv) An increase in actual emissions is creditabletime. only to the extent that the new level of actual emissions exceeds the old level.

(v) A decrease in actual emissions is creditable only to the extent that:

(*a*) The old level of actual emissions or the old level of allowable emissions, whichever is lower, exceeds the new level of actual emissions;

(*b*) It is federally enforceable at and after the time that construction on the particular change begins; and

(*c*) The Administrator or reviewing authority has not relied on it in issuing any permit under regulations approved pursuant to 40 CFR subpart I or the State has not relied on it in demonstrating attainment or reasonable further progress.

(*d*) It has approximately the same qualitative significance for public health and welfare as that attributed to the increase from the particular change.

(vi) An increase that results from a physical change at a source occurs when the emissions unit on which construction occurred becomes operational and begins to emit a particular pollutant. Any replacement unit that requires shakedown becomes operational only after a reasonable shakedown period, not to exceed 180 days.

(7) *Emissions unit* means any part of a stationary source which emits or would have the potential to emit any pollutant subject to regulation under the Act.

(8) *Secondary emissions* means emissions which would occur as a result of the construction or operation of a major stationary source or major modification, but do not come from the major stationary source or major modification itself. For the purpose of this section, secondary emissions must be specific, well defined, quantifiable, and impact the same general area as the stationary source or modification which causes the secondary emissions. Secondary emissions include emissions from any offsite support facility which would otherwise not be constructed or increase its emissions except as a result of the construction or operation of the major stationary source or major modification. Secondary emissions do not include any emissions which come directly from a mobile source, such as emissions from the tailpipe of a motor vehicle, from a train, or from a vessel.

(9) *Fugitive emissions* means those emissions which could not reasonably pass through a stack, chimney, vent, or other functionally equivalent opening.

(10) *Significant* means, in reference to a net emissions increase or the potential of a source to emit any of the following pollutants, a rate of emissions that would equal or exceed any of the following rates:

Pollutant and Emissions Rate

Carbon monoxide: 100 tons per year (tpy)
Nitrogen oxides: 40 tpy
Sulfur dioxide: 40 tpy
Ozone: 40 tpy of volatile organic compounds
Lead: 0.6 tpy

(11) *Allowable emissions* means the emissions rate of a stationary source calculated using the maximum rated capacity of the source (unless the source is subject to federally enforceable limits which restrict the operating rate, or hours of operation, or both) and the most stringent of the following:

(i) The applicable standards set forth in 40 CFR parts 60 and 61;

(ii) Any applicable State Implementation Plan emissions limitation, including those with a future compliance date; or

(iii) The emissions rate specified as a federally enforceable permit condition, including those with a future compliance date.

(12) *Federally enforceable* means all limitations and conditions which are enforceable by the Administrator, including those requirements developed pursuant to 40 CFR parts 60 and 61, requirements within any applicable State implementation plan, any permit requirements established pursuant to 40 CFR 52.21 or under regulations approved pursuant to 40 CFR part 51, subpart I, including operating permits issued under an EPA-approved program that is incorporated into the State implementation plan and expressly requires adherence to any permit issued under such program.

(13)(i) *Actual emissions* means the actual rate of emissions of a pollutant from an emissions unit, as determined in accordance with paragraphs (f) (ii) through (iv) of this section.

(ii) In general, actual emissions as of a particular date shall equal the average rate, in tons per year, at which the unit actually emitted the pollutant during a two-year period which precedes the particular date and which is representative of normal source operation. The Administrator shall allow the use of a different time period upon a determination that it is more representative of normal source operation. Actual emissions shall be calculated using the unit's actual operating hours, production rates, and types of materials processed, stored, or combusted during the selected time period.

(iii) The Administrator may presume that source-specific allowable emissions for the unit are equivalent to the actual emissions of the unit.

(iv) For any emissions unit (other than an electric utility steam generating unit specified in paragraph (f)(13)(v) of this section) which has not begun normal operations on the particular date, actual emissions shall equal the potential to emit of the unit on that date.

(v) For an electric utility steam generating unit (other than a new unit or the replacement of an existing unit) actual emissions of the unit following the physical or operational change shall equal the representative actual annual emissions of the unit, provided the source owner or operator maintains and submits to the Administrator, on an annual basis for a period of 5 years from the date the unit resumes regular operation, information demonstrating that the physical or operational change did not result in an emissions increase. A longer period, not to exceed 10 years, may be required by the Administrator if he determines such a period to be more representative of normal source post-change operations.

(14) *Construction* means any physical change or change in the method of operation (including fabrication, erection, installation, demolition, or modification) of an emissions unit which would result in a change in actual emissions.

(15) *Commence* as applied to construction of a major stationary source or major modification means that the owner or operator has all necessary preconstruction approvals or permits and either has:

(i) Begun, or caused to begin, a continuous program of actual on-site construction of the source, to be completed within a reasonable time; or

(ii) Entered into binding agreements or contractual obligations, which cannot be cancelled or modified without substantial loss to the owner or operator, to undertake a program of actual construction of the source to be completed within a reasonable time.

(16) *Necessary preconstruction approvals or permits* means those permits or approvals required under federal air quality control laws and regulations and those air quality control laws and regulations which are part of the applicable State Implementation Plan.

(17) *Begin actual construction* means, in general, initiation of physical on-site construction activities on an emissions unit which are of a permanent nature. Such activities include, but are not limited to, installation of building supports and foundations, laying of underground pipework, and construction of permanent storage structures. With respect to a change in method of operations, this term refers to those on-site activities other than preparatory activities which mark the initiation of change.

(18) *Volatile organic compounds (VOC)* is as defined in § 51.100(s) of this chapter.

(19) *Electric utility steam generating unit* means any steam electric generating unit that is constructed for the purpose of supplying more than one-third of its potential electric output capacity and more than 25 MW electrical output to any utility power distribution system for sale. Any steam supplied to a steam distribution system for the purpose of providing steam to a steam-electric generator that would produce electrical energy for sale is also considered in determining the electrical energy output capacity of the affected facility.

(20) *Representative actual annual emissions* means the average rate, in tons per year, at which the source is projected to emit a pollutant for the two-year period after a physical change or change in the method of operation of a unit, (or a different consecutive two-year period within 10 years after that change, where the Administrator determines that such period is more representative of normal source operations), considering the effect any such change will have on increasing or decreasing the hourly emissions rate and on projected capacity utilization. In projecting future emissions the Administrator shall:

(i) Consider-all relevant information, including but not limited to, historical operational data, the company's own representations, filings with the State or Federal regulatory authorities, and compliance plans under title IV of the Clean Air Act; and

(ii) Exclude, in calculating any increase in emissions that results from the particular physical change or change in the method of operation at an electric utility steam generating unit, that portion of the unit's emissions following the change that could have been accommodated during the representative baseline period and is attributable to an increase in projected capacity utilization at the unit that is unrelated to the particular change, including any increased utilization due to the rate of electricity demand growth for the utility system as a whole.

(21) *Temporary clean coal technology demonstration project* means a clean coal technology demonstration project that is operated for a period of 5 years or less, and which complies with the State implementation plans for the State in which the project is located and other requirements necessary to attain and maintain the national ambient air quality standards during the project and after it is terminated.

(22) *Clean coal technology* means any technology, including technologies applied at the precombustion, combustion, or post combustion stage, at a new or existing facility which will achieve significant reductions in air emissions of sulfur dioxide or oxides of nitrogen associated with the utilization of coal in the generation of electricity, or process steam which was not in widespread use as of November 15, 1990.

(23) *Clean coal technology demonstration project* means a project using funds appropriated under the heading 'Department of Energy-Clean Coal Technology', up to a total amount of

$2,500,000,000 for commercial demonstration of clean coal technology, or similar projects funded through appropriations for the Environmental Protection Agency. The Federal contribution for a qualifying project shall be at least 20 percent of the total cost of the demonstration project.

(24) *Pollution control project* means any activity or project undertaken at an existing electric utility steam generating unit for purposes of reducing emissions from such unit. Such activities or projects are limited to:

(i) The installation of conventional or innovative pollution control technology, including but not limited to advanced flue gas desulfurization, sorbent injection for sulfur dioxide and nitrogen oxides controls and electrostatic precipitators;

(ii) An activity or project to accommodate switching to a fuel which is less polluting than the fuel in use prior to the activity or project including, but not limited to natural gas or coal re-burning, co-firing of natural gas and other fuels for the purpose of controlling emissions;

(iii) A permanent clean coal technology demonstration project conducted under title II, section 101(d) of the Further Continuing Appropriations Act of 1985 (section 5903(d) of title 42 of the United States Code), or subsequent appropriations, up to a total amount of $2,500,000,000 for commercial demonstration of clean coal technology, or similar projects funded through appropriations for the Environmental Protection Agency; or

(iv) A permanent clean coal technology demonstration project that constitutes a repowering project.

(g) This section shall not apply to a major stationary source or major modification if the source or modification was not subject to 40 CFR part 51 Appendix S, as in effect on January 16, 1979, and the owner or operator:

(1) Obtained all final Federal, state, and local preconstruction approvals or permits necessary under the applicable State Implementation Plan before August 7, 1980;

(2) Commenced construction within 18 months from August 7, 1980, or any earlier time required under the applicable State Implementation Plan; and

(3) Did not discontinue construction for a period of 18 months or more and completed construction within a reasonable time.

(h) This section shall not apply to a source or modification that would be a major stationary source or major modification only if fugitive emissions, to the extent quantifiable, are considered in calculating the potential to emit of the stationary source or modification and the source does not belong to any of the following categories:

(1) Coal cleaning plants (with thermal dryers);

(2) Kraft pulp mills;

(3) Portland cement plants;

(4) Primary zinc smelters;

(5) Iron and steel mills;

(6) Primary aluminum ore reduction plants;

(7) Primary copper smelters;

(8) Municipal incinerators capable of charging more than 250 tons of refuse per day;

(9) Hydrofluoric, sulfuric, or nitric acid plants;

(10) Petroleum refineries;

(11) Lime plants;

(12) Phosphate rock processing plants;

(13) Coke oven batteries;

(14) Sulfur recovery plants;

(15) Carbon black plants (furnace process);

(16) Primary lead smelters;

(17) Fuel conversion plants;

(18) Sintering plants;

(19) Secondary metal production plants;

(20) Chemical process plants;

(21) Fossil-fuel boilers (or combination thereof) totaling more than 250 million British thermal units per hour heat input;

(22) Petroleum storage and transfer units with a total storage capacity exceeding 300,000 barrels;

(23) Taconite ore processing plants;

(24) Glass fiber processing plants;

(25) Charcoal production plants;

(26) Fossil fuel-fired steam electric plants of more than 250 million British thermal units per hour heat input;

(27) Any other stationary source category which, as of August 7, 1980, is being regulated under section 111 or 112 of the Act.

(i) At such time that a particular source or modification becomes a major stationary source or major modification solely by virtue of a relaxation in any enforceable limitation which was established after August 7, 1980, on the capacity of the source or modification otherwise to emit a pollutant, such as a restriction on hours of operation, then:

(1) If the construction moratorium imposed pursuant to this section is still in effect for the nonattainment area in which the source or modification is located, then the permit may not be so revised; or

(2) If the construction moratorium is no longer in effect in that area, then the requirements of 40 CFR 51.165(a) shall apply to the source or modification as though construction had not yet commenced on the source or modification.

(j) This section does not apply to major stationary sources or major modifications locating in a clearly defined part of a nonattainment area (such as a political subdivision of a State), where EPA finds that a plan which meets the requirements of Part D is in effect and is being implemented in that part.

(k) For an area designated as nonattainment after July 1, 1979, the restrictions in paragraphs (a) and (b) of this section shall not apply prior to eighteen months after the date the area is designated as nonattainment. The Offset Ruling shall govern permits to construct and operate applied for during the period between the date of designation as nonattainment and either the date the Part D plan is approved or the date the restrictions in paragraphs (a) and (b) of this section apply, whichever is earlier.

[44 FR 38473, July 2, 1979]

EDITORIAL NOTE: For FEDERAL REGISTER citations affecting § 52.24, see the List of CFR Sections Affected, which appears in the Finding Aids section of the printed volume and on GPO Access.

§ 52.26 Visibility monitoring strategy.

(a) *Plan Disapprovals.* The provisions of this section are applicable to any State implementation plan which has been disapproved with respect to visibility monitoring. Specific disapprovals are listed where applicable in Subparts B through DD of this part. The provisions of this section have been incorporated by reference into the applicable implementation plan for various States, as provided in Subparts B through DDD of this part.

(b) *Definitions.* For the purposes of this section:

(1) *Visibility protection area* means any area listed in 40 CFR 81.401–81.436 (1984).

(2) All other terms shall have the meaning ascribed to them in the Clean Air Act, or in the protection of visibility program (40 CFR 51.301), all as in effect on July 12, 1985.

(c) *Monitoring Requirements.* (1) The Administrator, in cooperation with the appropriate Federal land manager, shall monitor visibility within each visibility protection area in any State whose State implementation plan is subject to a disapproval for failure to satisfy 40 CFR 51.305 (1984).

(2) The Administrator, in monitoring visibility within each such area, shall determine both background visibility conditions and reasonably attributable visibility impairment caused by a source or small group of sources for that area. The extent and the form of monitoring shall be sufficient for use in determining the potential effects of a new stationary source on visibility in the area, the stationary source or sources that are causing any visibility impairment, and progress toward remedying that impairment.

(3) The Administrator shall use the following as appropriate to monitor visibility within each such area: (i) photographic cameras, (ii) fine particulate matter samplers, (iii) teleradiometers, (iv) nephelometers, (v) human observation, or (vi) other appropriate technology.

(4) The Administrator, in cooperation with the Federal land managers, shall prepare monitoring plans that describe, to the maximum extent practicable, the methods and instruments of data collection, the monitoring locations and frequencies, the implementation schedule, the quality assurance procedures, and the methods of data reporting that the Administrator will use for each area. The Administrator shall make these plans available to the public.

(5) The Administrator shall establish a central repository of monitoring data that includes any data on background visibility conditions and reasonably attributable impairment that the Administrator collects under this section and that the Federal land manager may collect or may have collected independently. These data shall be available to any person, subject to reasonable charges for copying.

(d) *Monitoring Plan Revision.* (1) The Administrator shall review the monitoring plan annually for each visibility protection area, revise it as necessary, and include an assessment of changes to visibility conditions since the last review. The Administrator shall make all plan revisions available to the public.

(2) Any person may make a request to the Administrator, at any time, for a revision to a monitoring plan. The Administrator shall respond to any such request within one year.

(e) *Delegation.* The Administrator may delegate, with respect to a particular visibility protection area, any of his functions under this section to any State or local air pollution control agency of any State whose boundaries encompass that area or to any Federal land manager with jurisdiction over the area.

[50 FR 28550, July 12, 1985]

§52.27 Protection of visibility from sources in attainment areas.

(a) *Plan disapproval.* The provisions of this section are applicable to any State implementation plan which has been disapproved with respect to protection of visibility, in mandatory Class I Federal areas, from sources emitting pollutants in any portion of any State where the existing air quality is better than the national ambient air quality standards for such pollutants, and where a State PSD program has been approved as part of the applicable SIP pursuant to 40 CFR 51.24. Specific disapprovals are listed where applicable in Subparts B through DDD of this part. The provisions of this section have been incorporated by reference into the applicable implementation plans for various States, as provided in Subparts B through DDD of this part.

(b) *Definitions.* For purposes of this section, all terms shall have the meaning ascribed to them in the Clean Air Act, in the prevention of significant deterioration (PSD) program approved as part of the applicable SIP pursuant to 40 CFR 51.24 for the State, or in the protection of visibility program (40 CFR 51.301), all as in effect on July 12, 1985.

(c) *Federal visibility analysis.* Any person shall have the right, in connection with any application for a permit to construct a major stationary source or major modification, to request that the administrator take responsibility from the State for conducting the required review of a proposed source's impact on visibility in any Fedral Class I area. If requested, the Administrator shall take such responsibility and conduct such review pursuant to paragraphs (e), (f) and (g) of this section in any case where the State fails to provide all of the procedural steps listed in paragraph (d) of this section. A request pursuant to this paragraph must be made within 60 days of the notice soliciting public comment on a permit, unless such notice is not properly given. The Administrator will not entertain requests challenging the substance of any State action concerning visibility where the State has provided all of the procedural steps listed in paragraph (d) of this section.

(d) *Procedural steps in visibility review.* (1) The reviewing authority must provide written notification to all affected Federal land managers of any permit application for any proposed new major stationary source or major modification that may affect visibility in any Federal Class I area. Such notification shall include a copy of all information relevant to the permit application and shall be given within 30 days of receipt and at least 60 days prior to any public hearing on the application for a permit to construct. Such notification shall include the proposed source's anticipated impacts on visibility in any Federal Class I area as provided by the applicant. Notification must also be given to all affected Federal land managers within 30 days of receipt of any advance notification of any such permit application.

(2) The reviewing authority must consider any analysis performed by the Federal land managers, provided within 30 days of the notification required by paragraph (d)(1) of this section, that shows that such proposed new major stationary source or major modification may have:

(i) An adverse impact on visibility in any Federal Class I area, or

(ii) An adverse impact on visibility in an integral vista codified in part 81 of this title.

(3) Where the reviewing authority finds that such an analysis does not demonstrate that the effect in paragraphs (d)(2) (i) or (ii) of this section will occur, either an explanation of its decision or notification as to where the explanation can be obtained must be included in the notice of public hearing.

(4) Where the reviewing authority finds that such an analysis does demonstrate that the effect in paragraph (d)(2)(i) of this section will occur, the permit shall not be issued.

(5) Where the reviewing authority finds that such an analysis does demonstrate that the effect in paragraph (d)(2)(ii) of this section will occur, the reviewing authority may issue a permit if the emissions from the source or modification will be consistent with reasonable progress toward the national goal. In making this decision, the reviewing authority may take into account the costs of compliance, the time necessary for compliance, the energy and nonair quality environmental impacts of compliance, and the useful life of the source.

(e) *Federal land manager notification.* The Administrator shall provide all of the procedural steps listed in paragraph (d) of this section in conducting reviews pursuant to this section.

(f) *Monitoring.* The Administrator may require monitoring of visibility in any Federal Class I area near the proposed new stationary source or major modification for such purposes and by such means as the Administrator deems necessary and appropriate.

(g) *Public participation.* The Administrator shall follow the applicable procedures at 40 CFR part 124 in conducting reviews under this section. The Administrator shall follow the procedures at 40 CFR 52.21(q) as in effect on August 7, 1980, to the extent that the procedures of 40 CFR part 124 do not apply.

(h) *Federal permit.* In any case where the Administrator has made a finding that a State consistently fails or is unable to provide the procedural steps listed in paragraph (d) of this section, the Administrator shall require all prospective permit applicants in such State to apply directly to the Administrator, and the Administrator shall conduct a visibility review pursuant to this section for all permit applications.

[50 FR 28551, July 12, 1985, as amended at 52 FR 45137, Nov. 24, 1987]

§ 52.28 Protection of visibility from sources in nonattainment areas.

(a) *Plan disapproval.* The provisions of this section are applicable to any State implementation plan which has been disapproved with respect to protection of visibility, in mandatory Class I Federal areas where visibility is considered an important value, from sources emitting pollutants in any portion of any State where the existing air quality is not in compliance with the national ambient air quality standards for such pollutants. Specific disapprovals are listed where applicable in Subparts B through DDD of this part. The provisions of this section have been incorporated into the applicable implementation plans for various States, as provided in Subparts B through DDD of this part.

(b) *Definitions.* For the purposes of this section:

(1) *Visibility protection area* means any area listed in 40 CFR 81.401–81.436 (1984).

(2) All other terms shall have the meaning ascribed to them in the protection of visibility program (40 CFR 51.301) or the prevention of significant deterioration (PSD) program either approved as part of the applicable SIP pursuant to 40 CFR 51.24 or in effect for the applicable SIP pursuant to 40 CFR 52.21, all as in effect on July 12, 1985.

(c) *Review of major stationary sources and major modifications—source applicability and exemptions.* (1) No stationary source or modification to which the requirements of this section apply shall begin actual construction without a

permit which states that the stationary source or modification would meet those requirements. The Administrator has sole authority to issue any such permit unless the authority has been delegated pursuant to paragraph (i) of this section.

(2) The requirements of this section shall apply to construction of any new major stationary source or major modification that would both be constructed in an area classified as nonattainment under section 107(d)(1)(A), (B) or (C) of the Clean Air Act and potentially have an impact on visibility in any visibility proctection area.

(3) The requirements of this section shall apply to any such major stationary source and any such major modification with respect to each pollutant subject to regulation under the Clean Air Act that it would emit, except as this section otherwise provides.

(4) The requirements of this section shall not apply to a particular major stationary source or major modification, if:

(i) The source or modification would be a nonprofit health or nonprofit educational institution, or a major modification would occur at such an institution, and the governor of the State in which the source or modification would be located requests that it be exempt from those requirements; or

(ii) The source or modification would be a major stationary source or major modification only if fugitive emissions, to the extent quantifiable, are considered in calculating the potential to emit of the stationary source or modification and the source does not belong to any of the following categories:

(A) Coal cleaning plants (with thermal dryers);

(B) Kraft pulp mills;

(C) Portland cement plants;

(D) Primary zinc smelters;

(E) Iron and steel mills;

(F) Primary aluminum ore reduction plants;

(G) Primary copper smelters;

(H) Municipal incinerators capable of charging more than 250 tons of refuse per day;

(I) Hydrofluoric, sulfuric, or nitric acid plants;

(J) Petroleum refineries;

(K) Lime plants;

(L) Phosphate rock processing plants;

(M) Coke oven batteries;

(N) Sulfur recovery plants;

(O) Carbon black plants (furnace process);

(P) Primary lead smelters;

(Q) Fuel conversion plants;

(R) Sintering plants;

(S) Secondary metal production plants;

(T) Chemical process plants;

(U) Fossil-fuel boiler (or combination thereof) totaling more than 250 million British thermal units per hour heat input;

(V) Petroleum storage and transfer units with a total storage capacity exceeding 300,000 barrels;

(W) Taconite ore processing plants;

(X) Glass fiber processing plants;

(Y) Charcoal production plants;

(Z) Fossil fuel-fired steam electric plants of more than 250 million British thermal units per hour heat input;

(AA) Any other stationary source category which, as of August 7, 1980, is being regulated under section 111 or 112 of the Act; or

(iii) The source is a portable stationary source which has previously received a permit under this section, and

(A) The owner or operator proposes to relocate the source and emissions of the source at the new location would be temporary; and

(B) The emissions from the source would not exceed its allowable emissions; and

(C) The emissions from the source would impact no Class I area and no area where an applicable increment is known to be violated; and

(D) Reasonable notice is given to the Administrator, prior to the relocation, identifying the proposed new location and the probable duration of operation at the new location. Such notice shall be given to the Administrator not less than 10 days in advance of the proposed relocation, unless a different time duration is previously approved by the Administrator.

(5) The requirements of this section shall not apply to a major stationary source or major modification with respect to a particular pollutant if the owner or operator demonstrates that, as to that pollutant, the source or

modification is located in an area designated as attainment under section 107 of the Clean Air Act.

(6) The requirements of this section shall not apply to a major stationary source or major modification with respect to a particular pollutant, if the allowable emissions of that pollutant from the source, or the net emissions increase of that pollutant from the modification:

(i) Would impact no Class I area and no area where an applicable increment is known to be violated, and

(ii) Would be temporary.

(d) *Visibility Impact Analyses.* The owner or operator of a source shall provide an analysis of the impairment to visibility that would occur as a result of the source or modification and general commercial, residential, industrial and other growth associated with the source or modification.

(e) *Federal land manager notification.* (1) The Federal land manager and the Federal official charged with direct responsibility for management of Federal Class I areas have an affirmative responsibility to protect the air quality related values (including visibility) of such lands and to consider, in consultation with the Administrator, whether a proposed source or modification will have an adverse impact on such values.

(2) The Administrator shall provide written notification to all affected Federal land managers of any permit application for any proposed new major stationary source or major modification that may affect visibility in any visibility protection area.The Administrator shall also provide for such notification to the Federal official charged with direct responsibility for management of any lands within any such area. Such notification shall include a copy of all information relevant to the permit application and shall be given within 30 days of receipt and at least 60 days prior to any public hearing on the application for a permit to construct. Such notification shall include an analysis of the proposed source's anticipated impacts on visibility in any visibility protection area. The Administrator shall also notify all affected FLM's within 30 days of receipt of any advance notification of any such permit application.

(3) The Administrator shall consider any analysis performed by the Federal land manager, provided within 30 days of the notification required by paragraph (e)(2) of this section, that such proposed new major stationary source or major modification may have an adverse impact on visibility in any visibility protection area. Where the Administrator finds that such an analysis does not demonstrate to the satisfaction of the Administrator that an adverse impact on visibility will result in the visibility protection area, the Administrator must, in the notice of public hearing, either explain his decision or give notice as to where the explanation can be obtained.

(f) *Public participation.* The Administrator shall follow the applicable procedures of 40 CFR part 124 in processing applications under this section. The Administrator shall follow the procedures at 40 CFR 52.21(q) as in effect on August 7, 1980, to the extent that the procedures of 40 CFR part 124 do not apply.

(g) *National visibility goal.* The Administrator shall only issue permits to those sources whose emissions will be consistent with making reasonable progress toward the national goal of preventing any future, and remedying any existing, impairment of visibility in visibility protection areas which impairment results from man-made air pollution. In making the decision to issue a permit, the Administrator may take into account the costs of compliance, the time necessary for compliance, the energy and nonair quality environmental impacts of compliance, and the useful life of the source.

(h) *Monitoring.* The Administrator may require monitoring of visibility in any visibility protection area near the proposed new stationary source or major modification for such purposes and by such means as the Administrator deems necessary and appropriate.

(i) *Delegation of authority.* (1) The Administrator shall have the authority to delegate the responsibility for conducting source review pursuant to this section to any agency in accordance with paragraphs (i)(2) and (3) of this section.

(2) Where the Administrator delegates the responsibility for conducting source review under this section to any agency other than a Regional Office of the Environmental Protection Agency, the following provisions shall apply:

(i) Where the delegate agency is not an air pollution control agency it shall consult with the appropriate State and local air pollution control agency prior to making any determination under this section. Similarly, where the delegate agency does not have continuing responsibility for managing land use, it shall consult with the appropriate State and local agency primarily responsible for managing land use prior to making any determination under this section.

(ii) The delegate agency shall submit a copy of any public comment notice required under paragraph (f) of this section to the Administrator through the appropriate Regional Office.

(3) The Administrator's authority for reviewing a source or modification located on an Indian Reservation shall not be redelegated other than to a Regional Office of the Environmental Protection Agency, except where the State has assumed jurisdiction over such land under other laws. Where the State has assumed such jurisdiction, the Administrator may delegate his authority to the States in accordance with paragraph (i)(2) of this section.

[50 FR 28551, July 12, 1985]

§52.29 Visibility long-term strategies.

(a) *Plan disapprovals.* The provisions of this section are applicable to any State implementation plan which has been disapproved for not meeting the requirements of 40 CFR 51.306 regarding the development, periodic review, and revision of visibility long-term strategies. Specific disapprovals are listed where applicable in Subparts B through DDD of this part. The provisions of this section have been incorporated into the applicable implementation plan for various States, as provided in Subparts B through DDD of this part.

(b) *Definitions.* For the purposes of this section, all terms shall have the meaning as ascribed to them in the Clean Air Act, or in the protection of visibility program (40 CFR 51.301).

(c) *Long-term strategy.* (1) A long-term strategy is a 10- to 15-year plan for making reasonable progress toward the national goal specified in §51.300(a). This strategy will cover any existing impairment certified by the Federal land manager and any integral vista which has been identified according to §51.304.

(2) The Administrator shall review, and revise if appropriate, the long-term strategies developed for each visibility protection area. The review and revisions will be completed no less frequently than every 3 years from November 24, 1987.

(3) During the long-term strategy review process, the Administrator shall consult with the Federal land managers responsible for the appropriate mandatory Class I Federal areas, and will coordinate long-term strategy development for an area with existing plans and goals, including those provided by the Federal land managers.

(4) The Administrator shall prepare a report on any progress made toward the national visibility goal since the last long-term strategy revisions. A report will be made available to the public not less frequently than 3 years from November 24, 1987. This report must include an assessment of:

(i) The progress achieved in remedying existing impairment of visibility in any mandatory Class I Federal area;

(ii) The ability of the long-term strategy to prevent future impairment of visibility in any mandatory Class I Federal area;

(iii) Any change in visibility since the last such report, or in the case of the first report, since plan approval;

(iv) Additional measures, including the need for SIP revisions, that may be necessary to assure reasonable progress toward the national visibility goal;

(v) The progress achieved in implementing best available retrofit technology (BART) and meeting other schedules set forth in the long-term strategy;

(vi) The impact of any exemption granted under §51.303;

(vii) The need for BART to remedy existing visibility impairment of any integral vista identified pursuant to §51.304.

(d) *Delegation of authority.* The Administrator may delegate with respect to a particular visibility protection area any of his functions under this section, except the making of regulations, to any State or local air pollution control agency of any State whose boundaries encompass that area.

[52 FR 45137, Nov. 24, 1987]

§ 52.30 Criteria for limiting application of sanctions under section 110(m) of the Clean Air Act on a statewide basis.

(a) *Definitions.* For the purpose of this section:

(1) The term "political subdivision" refers to the representative body that is responsible for adopting and/or implementing air pollution controls for one, or any combination of one or more of the following: city, town, borough, county, parish, district, or any other geographical subdivision created by, or pursuant to, Federal or State law. This will include any agency designated under section 174, 42 U.S.C. 7504, by the State to carry out the air planning responsibilities under part D.

(2) The term "required activity" means the submission of a plan or plan item, or the implementation of a plan or plan item.

(3) The term "deficiency" means the failure to perform a required activity as defined in paragraph (a)(2) of this section.

(4) For purposes of § 52.30, the terms "plan" or "plan item" mean an implementation plan or portion of an implementation plan or action needed to prepare such plan required by the Clean Air Act, as amended in 1990, or in response to a SIP call issued pursuant to section 110(k)(5) of the Act.

(b) *Sanctions.* During the 24 months after a finding, determination, or disapproval under section 179(a) of the Clean Air Act is made, EPA will not impose sanctions under section 110(m) of the Act on a statewide basis if the Administrator finds that one or more political subdivisions of the State are principally responsible for the deficiency on which the finding, disapproval, or determination as provided under section 179(a)(1) through (4) is based.

(c) *Criteria.* For the purposes of this provision, EPA will consider a political subdivision to be principally responsible for the deficiency on which a section 179(a) finding is based, if all five of the following criteria are met.

(1) The State has provided adequate legal authority to a political subdivision to perform the required activity.

(2) The required activity is one which has traditionally been performed by the local political subdivision, or the responsibility for performing the required activity has been delegated to the political subdivision.

(3) The State has provided adequate funding or authority to obtain funding (when funding is necessary to carry out the required activity) to the political subdivision to perform the required activity.

(4) The political subdivision has agreed to perform (and has not revoked that agreement), or is required by State law to accept responsibility for performing, the required activity.

(5) The political subdivision has failed to perform the required activity.

(d) *Imposition of sanctions.* (1) If all of the criteria in paragraph (c) of this section have been met through the action or inaction of one political subdivision, EPA will not impose sanctions on a statewide basis.

(2) If not all of the criteria in paragraph (c) of this section have been met through the action or inaction of one political subdivision, EPA will determine the area for which it is reasonable and appropriate to apply sanctions.

[59 FR 1484, Jan. 11, 1994]

§ 52.31 Selection of sequence of mandatory sanctions for findings made pursuant to section 179 of the Clean Air Act.

(a) *Purpose.* The purpose of this section is to implement 42 U.S.C. 7509(a) of the Act, with respect to the sequence in which sanctions will automatically apply under 42 U.S.C. 7509(b), following a finding made by the Administrator pursuant to 42 U.S.C. 7509(a).

(b) *Definitions.* All terms used in this section, but not specifically defined herein, shall have the meaning given them in § 52.01.

(1) *1990 Amendments* means the 1990 Amendments to the Clean Air Act (Pub. L. No. 101–549, 104 Stat. 2399).

(2) *Act* means Clean Air Act, as amended in 1990 (42 U.S.C. 7401 *et seq.* (1991)).

(3) *Affected area* means the geographic area subject to or covered by the Act requirement that is the subject of the finding and either, for purposes of the offset sanction under paragraph (e)(1) of this section and the highway sanction under paragraph (e)(2) of this section, is or is within an area designated nonattainment under 42 U.S.C. 7407(d) or, for purposes of the offset sanction under paragraph (e)(1) of this section, is or is within an area otherwise subject to the emission offset requirements of 42 U.S.C. 7503.

(4) *Criteria pollutant* means a pollutant for which the Administrator has promulgated a national ambient air quality standard pursuant to 42 U.S.C. 7409 (i.e., ozone, lead, sulfur dioxide, particulate matter, carbon monoxide, nitrogen dioxide).

(5) *Findings* or *Finding* refer(s) to one or more of the findings, disapprovals, and determinations described in subsection 52.31 (c).

(6) *NAAQS* means national ambient air quality standard the Administrator has promulgated pursuant to 42 U.S.C. 7409.

(7) *Ozone precursors* mean nitrogen oxides (NO_X) and volatile organic compounds (VOC).

(8) *Part D* means part D of title I of the Act.

(9) *Part D SIP or SIP revision* or *plan* means a State implementation plan or plan revision that States are required to submit or revise pursuant to part D.

(10) *Precursor* means pollutant which is transformed in the atmosphere (later in time and space from point of emission) to form (or contribute to the formation of) a criteria pollutant.

(c) *Applicability*. This section shall apply to any State in which an affected area is located and for which the Administrator has made one of the following findings, with respect to any part D SIP or SIP revision required under the Act:

(1) A finding that a State has failed, for an area designated nonattainment under 42 U.S.C. 7407(d), to submit a plan, or to submit one or more of the elements (as determined by the Administrator) required by the provisions of the Act applicable to such an area, or has failed to make a submission for such an area that satisfies the minimum criteria established in relation to any such element under 42 U.S.C. 7410(k);

(2) A disapproval of a submission under 42 U.S.C. 7410(k), for an area designated nonattainment under 42 U.S.C. 7407(d), based on the submission's failure to meet one or more of the elements required by the provisions of the Act applicable to such an area;

(3)(i) A determination that a State has failed to make any submission required under the Act, other than one described under paragraph (c)(1) or (c)(2) of this section, including an adequate maintenance plan, or has failed to make any submission, required under the Act, other than one described under paragraph (c)(1) or (c)(2) of this section, that satisfies the minimum criteria established in relation to such submission under 42 U.S.C. 7410(k)(1)(A); or

(ii) A disapproval in whole or in part of a submission described under paragraph (c)(3)(i) of this section; or

(4) A finding that any requirement of an approved plan (or approved part of a plan) is not being implemented.

(d) *Sanction application sequencing.* (1) To implement 42 U.S.C. 7509(a), the offset sanction under paragraph (e)(1) of this section shall apply in an affected area 18 months from the date when the Administrator makes a finding under paragraph (c) of this section unless the Administrator affirmatively determines that the deficiency forming the basis of the finding has been corrected. To further implement 42 U.S.C. 7509(a), the highway sanction under paragraph (e)(2) of this section shall apply in an affected area 6 months from the date the offset sanction under paragraph (e)(1) of this section applies, unless the Administrator affirmatively determines that the deficiency forming the basis of the finding has been corrected. For the findings under paragraphs (c)(2), (c)(3)(ii), and (c)(4) of this section, the date of the finding shall be the effective date as defined in the

final action triggering the sanctions clock.

(2)(i) Notwithstanding paragraph (d)(1) of this section, to further implement 42 U.S.C. 7509(a), following the findings under paragraphs (c)(2) and (c)(3)(ii) of this section, if the State has submitted a revised plan to correct the deficiency prompting the finding and the Administrator, prior to 18 months from the finding, has proposed to fully or conditionally approve the revised plan and has issued an interim final determination that the revised plan corrects the deficiency prompting the finding, application of the offset sanction under paragraph (e)(1) of this section shall be deferred unless and until the Administrator proposes to or takes final action to disapprove the plan in whole or in part. If the Administrator issues such a proposed or final disapproval of the plan, the offset sanction under paragraph (e)(1) of this section shall apply in the affected area on the later of the date the Administrator issues such a proposed or final disapproval, or 18 months following the finding that started the sanctions clock. The highway sanction under paragraph (e)(2) of this section shall apply in the affected area 6 months after the date the offset sanction under paragraph (e)(1) of this section applies, unless the Administrator determines that the deficiency forming the basis of the finding has been corrected.

(ii) Notwithstanding paragraph (d)(1) of this section, to further implement 42 U.S.C. 7509(a), following the findings under paragraphs (c)(2) and (c)(3)(ii) of this section, if the State has submitted a revised plan to correct the deficiency prompting the finding and after 18 but before 24 months from the finding the Administrator has proposed to fully or conditionally approve the revised plan and has issued an interim final determination that the revised plan corrects the deficiency prompting the finding, application of the offset sanction under paragraph (e)(1) of this section shall be stayed and application of the highway sanction under paragraph (e)(2) of this section shall be deferred unless and until the Administrator proposes to or takes final action to disapprove the plan in whole or in part. If the Administrator issues such a proposed or final disapproval of the plan, the offset sanction under paragraph (e)(1) of this section shall reapply in the affected area on the date the Administrator issues such a proposed or final disapproval. The highway sanction under paragraph (e)(2) of this section shall apply in the affected area on the later of 6 months from the date the offset sanction under paragraph (e)(1) of this section first applied in the affected area, unless the Administrator determines that the deficiency forming the basis of the finding has been corrected, or immediately if the proposed or final disapproval occurs more than 6 months after initial application of the offset sanction under paragraph (e)(1) of this section.

(iii) Notwithstanding paragraph (d)(1) of this section, to further implement 42 U.S.C. 7509(a), following the findings under paragraphs (c)(2) and (c)(3)(ii) of this section, if the State has submitted a revised plan to correct the deficiency prompting the finding and more than 24 months after the finding the Administrator has proposed to fully or conditionally approve the revised plan and has issued an interim final determination that the revised plan corrects the deficiency prompting the finding, application of the offset sanction under paragraph (e)(1) of this section and application of the highway sanction under paragraph (e)(2) of this section shall be stayed unless and until the Administrator proposes to or takes final action to disapprove the plan in whole or in part. If the Administrator issues such a proposed or final disapproval, the offset sanction under paragraph (e)(1) of this section and the highway sanction under paragraph (e)(2) of this section shall reapply in the affected area on the date the Administrator issues such proposed or final disapproval.

(3)(i) Notwithstanding paragraph (d)(1) of this section, to further implement 42 U.S.C. 7509(a), following the findings under paragraphs (c)(2) and (c)(3)(ii) of this section, if the State has submitted a revised plan to correct the deficiency prompting the finding and the Administrator, prior to 18 months from the finding, has conditionally-approved the revised plan and has issued an interim final determination that the revised plan corrects the deficiency

prompting the finding, application of the offset sanction under paragraph (e)(1) of this section shall be deferred unless and until the conditional approval converts to a disapproval or the Administrator proposes to or takes final action to disapprove in whole or in part the revised SIP the State submits to fulfill the commitment in the conditionally-approved plan. If the conditional approval so becomes a disapproval or the Administrator issues such a proposed or final disapproval, the offset sanction under paragraph (e)(1) of this section shall apply in the affected area on the later of the date the approval becomes a disapproval or the Administrator issues such a proposed or final disapproval, whichever is applicable, or 18 months following the finding that started the sanctions clock. The highway sanction under paragraph (e)(2) of this section shall apply in the affected area 6 months after the date the offset sanction under paragraph (e)(1) of this section applies, unless the Administrator determines that the deficiency forming the basis of the finding has been corrected.

(ii) Notwithstanding paragraph (d)(1) of this section, to further implement 42 U.S.C. 7509(a), following the findings under paragraphs (c)(2) and (c)(3)(ii) of this section, if the State has submitted a revised plan to correct the deficiency prompting the finding and after 18 but before 24 months from the finding the Administrator has conditionally approved the revised plan and has issued an interim final determination that the revised plan corrects the deficiency prompting the finding, application of the offset sanction under paragraph (e)(1) of this section shall be stayed and application of the highway sanction under paragraph (e)(2) of this section shall be deferred unless and until the conditional approval converts to a disapproval or the Administrator proposes to or takes final action to disapprove in whole or in part the revised SIP the State submits to fulfill the commitment in the conditionally-approved plan. If the conditional approval so becomes a disapproval or the Administrator issues such a proposed or final disapproval, the offset sanction under paragraph (e)(1) of this section shall reapply in the affected area on the date the approval becomes a disapproval or the Administrator issues such a proposed or final disapproval, whichever is applicable. The highway sanction under paragraph (e)(2) of this section shall apply in the affected area on the later of 6 months from the date the offset sanction under paragraph (e)(1) of this section first applied in the affected area, unless the Administrator determines that the deficiency forming the basis of the finding has been corrected, or immediately if the conditional approval becomes a disapproval or the Administrator issues such a proposed or final disapproval, whichever is applicable, more than 6 months after initial application of the offset sanction under paragraph (e)(1) of this section.

(iii) Notwithstanding paragraph (d)(1) of this section, to further implement 42 U.S.C. 7509(a), following the findings under paragraphs (c)(2) and (c)(3)(ii) of this section, if the State has submitted a revised plan to correct the deficiency prompting the finding and after 24 months from the finding the Administrator has conditionally approved the revised plan and has issued an interim final determination that the revised plan corrects the deficiency prompting the finding, application of the offset sanction under paragraph (e)(1) of this section and application of the highway sanction under paragraph (e)(2) of this section shall be stayed unless and until the conditional approval converts to a disapproval or the Administrator proposes to or takes final action to disapprove in whole or in part the revised SIP the State submits to fulfill its commitment in the conditionally-approved plan. If the conditional approval so becomes a disapproval or the Administrator issues such a proposed or final disapproval, the offset sanction under paragraph (e)(1) of this section and the highway sanction under paragraph (e)(2) of this section shall reapply in the affected area on the date the conditional approval becomes a disapproval or the Administrator issues such a proposed or final disapproval, whichever is applicable.

(4)(i) Notwithstanding paragraph (d)(1) of this section, to further implement 42 U.S.C. 7509(a), following findings under paragraph (c)(4) of this section, if the Administrator, prior to 18

months from the finding, has proposed to find that the State is implementing the approved plan and has issued an interim final determination that the deficiency prompting the finding has been corrected, application of the offset sanction under paragraph (e)(1) of this section shall be deferred unless and until the Administrator preliminarily or finally determines, through a proposed or final finding, that the State is not implementing the approved plan and that, therefore, the State has not corrected the deficiency. If the Administrator so preliminarily or finally determines that the State has not corrected the deficiency, the offset sanction under paragraph (e)(1) of this section shall apply in the affected area on the later of the date the Administrator proposes to take action or takes final action to find that the finding of nonimplementation has not been corrected, or 18 months following the finding that started the sanctions clock. The highway sanction under paragraph (e)(2) of this section shall apply in the affected area 6 months after the date the offset sanction under paragraph (e)(1) of this section first applies, unless the Administrator preliminarily or finally determines that the deficiency forming the basis of the finding has been corrected.

(ii) Notwithstanding paragraph (d)(1) of this section, to further implement 42 U.S.C. 7509(a), following findings under paragraph (c)(4) of this section, if after 18 months but before 24 months from the finding the Administrator has proposed to find that the State is implementing the approved plan and has issued an interim final determination that the deficiency prompting the finding has been corrected, application of the offset sanction under paragraph (e)(1) of this section shall be stayed and application of the highway sanction under paragraph (e)(2) of this section shall be deferred unless and until the Administrator preliminarily or finally determines, through a proposed or final finding, that the State is not implementing the approved plan and that, therefore, the State has not corrected the deficiency. If the Administrator so preliminarily or finally determines that the State has not corrected the deficiency, the offset sanction under paragraph (e)(1) of this section shall reapply in the affected area on the date the Administrator proposes to take action or takes final action to find that the finding of nonimplementation has not been corrected. The highway sanction under paragraph (e)(2) of this section shall apply in the affected area on the later of 6 months from the date the offset sanction under paragraph (e)(1) of this section first applied in the affected area, unless the Administrator preliminarily or finally determines that the deficiency forming the basis of the finding has been corrected, or immediately if EPA's proposed or final action finding the deficiency has not been corrected occurs more than 6 months after initial application of the offset sanction under paragraph (e)(1) of this section.

(iii) Notwithstanding paragraph (d)(1) of this section, to further implement 42 U.S.C. 7509(a), following findings under paragraph (c)(4) of this section, if after 24 months from the finding the Administrator has proposed to find that the State is implementing the approved plan and has issued an interim final determination that the deficiency prompting the finding has been corrected, application of the offset sanction under paragraph (e)(1) of this section and the highway sanction under paragraph (e)(2) of this section shall be stayed unless and until the Administrator preliminarily or finally determines, through a proposed or final finding, that the State is not implementing the approved plan, and that, therefore, the State has not corrected the deficiency. If the Administrator so preliminarily or finally determines that the State has not corrected the deficiency, the offset sanction under paragraph (e)(1) of this section and the highway sanction under paragraph (e)(2) of this section shall reapply in the affected area on the date the Administrator proposes to take action or takes final action to find that the finding of nonimplementation has not been corrected.

(5) Any sanction clock started by a finding under paragraph (c) of this section will be permanently stopped and sanctions applied, stayed or deferred will be permanently lifted upon a final

EPA finding that the deficiency forming the basis of the finding has been corrected. For a sanctions clock and applied sanctions based on a finding under paragraphs (c)(1) and (c)(3)(i) of this section, a finding that the deficiency has been corrected will occur by letter from the Administrator to the State governor. For a sanctions clock or applied, stayed or deferred sanctions based on a finding under paragraphs (c)(2) and (c)(3)(ii) of this section, a finding that the deficiency has been corrected will occur through a final notice in the FEDERAL REGISTER fully approving the revised SIP. For a sanctions clock or applied, stayed or deferred sanctions based on a finding under paragraph (c)(4) of this section, a finding that the deficiency has been corrected will occur through a final notice in the FEDERAL REGISTER finding that the State is implementing the approved SIP.

(6) Notwithstanding paragraph (d)(1) of this section, nothing in this section will prohibit the Administrator from determining through notice-and-comment rulemaking that in specific circumstances the highway sanction, rather than the offset sanction, shall apply 18 months after the Administrator makes one of the findings under paragraph (c) of this section, and that the offset sanction, rather than the highway sanction, shall apply 6 months from the date the highway sanction applies.

(e) *Available sanctions and method for implementation*—(1) *Offset sanction.* (i) As further set forth in paragraphs (e)(1)(ii)–(e)(1)(vi) of this section, the State shall apply the emissions offset requirement in the timeframe prescribed under paragraph (d) of this section on those affected areas subject under paragraph (d) of this section to the offset sanction. The State shall apply the emission offset requirements in accordance with 42 U.S.C. 7503 and 7509(b)(2), at a ratio of at least two units of emission reductions for each unit of increased emissions of the pollutant(s) and its (their) precursors for which the finding(s) under paragraph (c) of this section is (are) made. If the deficiency prompting the finding under paragraph (c) of this section is not specific to one or more particular pollutants and their precursors, the 2-to-1 ratio shall apply to all pollutants (and their precursors) for which an affected area within the State listed in paragraph (e)(1)(i) of this section is required to meet the offset requirements of 42 U.S.C. 7503.

(ii) Notwithstanding paragraph (e)(1)(i) of this section, when a finding is made with respect to a requirement for the criteria pollutant ozone or when the finding is not pollutant-specific, the State shall not apply the emissions offset requirements at a ratio of at least 2-to-1 for emission reductions to increased emissions for nitrogen oxides where, under 42 U.S.C. 7511a(f), the Administrator has approved an NO_X exemption for the affected area from the Act's new source review requirements under 42 U.S.C. 7501–7515 for NO_X or where the affected area is not otherwise subject to the Act's new source review requirements for emission offsets under 42 U.S.C. 7501–7515 for NO_X.

(iii) Notwithstanding paragraph (e)(1)(i) of this section, when a finding under paragraph (c) of this section is made with respect to PM–10, or the finding is not pollutant-specific, the State shall not apply the emissions offset requirements, at a ratio of at least 2-to-1 for emission reductions to increased emissions to PM–10 precursors if the Administrator has determined under 42 U.S.C. 7513a(e) that major stationary sources of PM–10 precursors do not contribute significantly to PM–10 levels which exceed the NAAQS in the affected area.

(iv) For purposes of applying the emissions offset requirement set forth in 42 U.S.C. 7503, at the 2-to-1 ratio required under this section, the State shall comply with the provisions of a State-adopted new source review (NSR) program that EPA has approved under 42 U.S.C. 7410(k)(3) as meeting the nonattainment area NSR requirements of 42 U.S.C. 7501–7515, as amended by the 1990 Amendments, or, if no plan has been so approved, the State shall comply directly with the nonattainment area NSR requirements specified in 42 U.S.C. 7501–7515, as amended by the 1990 Amendments, or cease issuing permits to construct and operate major new or

modified sources as defined in those requirements. For purposes of applying the offset requirement under 42 U.S.C. 7503 where EPA has not fully approved a State's NSR program as meeting the requirements of part D, the specifications of those provisions shall supersede any State requirement that is less stringent or inconsistent.

(v) For purposes of applying the emissions offset requirement set forth in 42 U.S.C. 7503, any permit required pursuant to 42 U.S.C. 7503 and issued on or after the date the offset sanction applies under paragraph (d) of this section shall be subject to the enhanced 2-to-1 ratio under paragraph (e)(1)(i) of this section.

(2) *Highway funding sanction.* The highway sanction shall apply, as provided in 42 U.S.C. 7509(b)(1), in the timeframe prescribed under paragraph (d) of this section on those affected areas subject under paragraph (d) of this section to the highway sanction, but shall apply only to those portions of affected areas that are designated nonattainment under 40 CFR part 81.

[59 FR 39859, Aug. 4, 1994]

§ 52.32 Sanctions following findings of SIP inadequacy.

For purposes of the SIP revisions required by § 51.120, EPA may make a finding under section 179(a) (1)–(4) of the Clean Air Act, 42 U.S.C. 7509(a) (1)–(4), starting the sanctions process set forth in section 179(a) of the Clean Air Act. Any such finding will be deemed a finding under § 52.31(c) and sanctions will be imposed in accordance with the order of sanctions and the terms for such sanctions established in § 52.31.

[60 FR 4737, Jan. 24, 1995]

§ 52.33 Compliance certifications.

(a) For the purpose of submitting compliance certifications, nothing in this part or in a plan promulgated by the Administrator shall preclude the use, including the exclusive use, of any credible evidence or information, relevant to whether a source would have been in compliance with applicable requirements if the appropriate performance or compliance test had been performed.

(b) For all federal implementation plans, paragraph (a) of this section is incorporated into the plan.

[62 FR 8328, Feb. 24, 1997]

§ 52.34 Action on petitions submitted under section 126 relating to emissions of nitrogen oxides.

(a) *Definitions.* For purposes of this section, the following definitions apply:

(1) *Administrator* means the Administrator of the United States Environmental Protection Agency or the Administrator's duly authorized representative.

(2) *Large Electric Generating Units (large EGUs)* means:

(i) For units that commenced operation before January 1, 1997, a unit serving during 1995 or 1996 a generator that had a nameplate capacity greater than 25 MWe and produced electricity for sale under a firm contract to the electric grid.

(ii) For units that commenced operation on or after January 1, 1997 and before January 1, 1999, a unit serving at any time during 1997 or 1998 a generator that had a nameplate capacity greater than 25 MWe and produced electricity for sale under a firm contract to the electric grid.

(iii) For units that commence operation on or after January 1, 1999, a unit serving at any time a generator that has a nameplate capacity greater than 25 MWe and produces electricity for sale.

(3) *Large Non-Electric Generating Units (large non-EGUs)* means:

(i) For units that commenced operation before January 1, 1997, a unit that has a maximum design heat input greater than 250 mmBtu/hr and that did not serve during 1995 or 1996 a generator producing electricity for sale under a firm contract to the electric grid.

(ii) For units that commenced operation on or after January 1, 1997 and before January 1, 1999, a unit that has a maximum design heat input greater than 250 mmBtu/hr and that did not serve at any time during 1997 or 1998 a generator producing electricity for sale under a firm contract to the electric grid.

(iii) For units that commence operation on or after January 1, 1999, a unit with a maximum design heat input greater than 250 mmBtu/hr that:

(A) At no time serves a generator producing electricity for sale; or

(B) At any time serves a generator producing electricity for sale, if any such generator has a nameplate capacity of 25 MWe or less and has the potential to use 50 percent or less of the potential electrical output capacity of the unit.

(4) *New sources* means new and modified sources.

(5) *NO_X* means oxides of nitrogen.

(6) *OTAG* means the Ozone Transport Assessment Group (active 1995–1997), a national work group that addressed the problem of ground-level ozone and the long-range transport of air pollution across the Eastern United States. The OTAG was a partnership between EPA, the Environmental Council of the States, and various industry and environmental groups.

(7) *Ozone season* means the period of time beginning May 1 of a year and ending on September 30 of the same year, inclusive.

(8) *Potential electrical output capacity* means, with regard to a unit, 33 percent of the maximum design heat input of the unit.

(9) *Unit* means a fossil-fuel fired stationary boiler, combustion turbine, or combined cycle system.

(b) *Purpose and applicability*. Paragraphs (c), (e)(1) and (e)(2), (g), and (h)(1) and (h)(2) of this section set forth the Administrator's findings with respect to the 1-hour national ambient air quality standard (NAAQS) for ozone that certain new and existing sources of emissions of nitrogen oxides ("NO_X") in certain States emit or would emit NO_X in violation of the prohibition in section 110(a)(2)(D)(i) of the Clean Air Act (CAA) on emissions in amounts that contribute significantly to nonattainment in certain States that submitted petitions in 1997–1998 addressing such NO_X emissions under section 126 of the CAA. Paragraphs (d), (e)(3) and (e)(4), (f), and (h)(3) and (h)(4) of this section set forth the Administrator's affirmative technical determinations with respect to the 8-hour NAAQS for ozone that certain new and existing sources of emissions of NO_X in certain States emit or would emit NO_X in violation of the prohibition in section 110(a)(2)(D)(i) of the CAA on emissions in amounts that contribute significantly to nonattainment in, or interfere with maintenance by, certain States that submitted petitions in 1997–1998 addressing such NO_X emissions under section 126 of the CAA. (As used in this section, the term new source includes modified sources, as well.) Paragraph (i) of this section explains the circumstances under which the findings for sources in a specific State would be withdrawn. Paragraph (j) of this section sets forth the control requirements that apply to the sources of NO_X emissions affected by the findings. Paragraph (k) of this section indefinitely stays the effectiveness of the affirmative technical determinations with respect to the 8-hour ozone standard.

(1) The States that submitted such petitions are Connecticut, Maine, Massachusetts, New Hampshire, New York, Pennsylvania, Rhode Island, and Vermont (each of which, hereinafter in this section, may be referred to also as a "petitioning State").

(2) The new and existing sources of NO_X emissions covered by the petitions that emit or would emit NO_X emissions in amounts that make such significant contributions are large electric generating units (EGUs) and large non-EGUs.

(c) *Section 126(b) findings relating to impacts on ozone levels in Connecticut*—(1) *Section 126(b) findings with respect to the 1-hour ozone standard in Connecticut*. The Administrator finds that any existing or new major source or group of stationary sources emits or would emit NO_X in violation of the Clean Air Act section 110(a)(2)(d)(i) prohibition with respect to the 1-hour ozone standard in the State of Connecticut if it is or will be:

(i) In a category of large EGUs or large non-EGUs;

(ii) Located in one of the States (or portions thereof) listed in paragraph (c)(2) of this section; and

(iii) Within one of the "Named Source Categories" listed in the portion of Table F–1 in appendix F of this part describing the sources of NO_X emissions

covered by the petition of the State of Connecticut.

(2) *States or portions of States that contain sources for which the Administrator is making section 126(b) findings with respect to the 1-hour ozone standard in Connecticut.* The States, or portions of States, that contain sources of NO_X emissions for which the Administrator is making section 126(b) findings under paragraph (c)(1) of this section are:

(i) Delaware.

(ii) District of Columbia.

(iii) Portion of Indiana located in OTAG Subregions 2 and 6, as shown in appendix F, Figure F–2, of this part.

(iv) Portion of Kentucky located in OTAG Subregion 6, as shown in appendix F, Figure F–2, of this part.

(v) Maryland.

(vi) Portion of Michigan located in OTAG Subregion 2, as shown in appendix F, Figure F–2, of this part.

(vii) Portion of North Carolina located in OTAG Subregion 7, as shown in appendix F, Figure F–2, of this part.

(viii) New Jersey.

(ix) Portion of New York extending west and south of Connecticut, as shown in appendix F, Figure F–2, of this part.

(x) Ohio.

(xi) Pennsylvania.

(xii) Virginia.

(xiii) West Virginia.

(d) *Affirmative technical determinations relating to impacts on ozone levels in Maine*—(1) *Affirmative technical determinations with respect to the 8-hour ozone standard in Maine.* The Administrator of EPA finds that any existing or new major source or group of stationary sources emits or would emit NO_X in amounts that contribute significantly to nonattainment in the State of Maine, with respect to the 8-hour NAAQS for ozone if it is or will be:

(i) In a category of large EGUs or large non-EGUs;

(ii) Located in one of the States (or portions thereof) listed in paragraph (d)(2) of this section; and

(iii) Within one of the "Named Source Categories" listed in the portion of Table F–1 of appendix F of this part describing the sources of NO_X emissions covered by the petition of the State of Maine.

(2) *States or portions of States that contain sources for which EPA is making an affirmative technical determination with respect to the 8-hour ozone standard in Maine.* The States that contain sources for which EPA is making an affirmative technical determination are:

(i) Connecticut.

(ii) Delaware.

(iii) District of Columbia.

(iv) Maryland.

(v) Massachusetts.

(vi) New Jersey.

(vii) New York.

(viii) Pennsylvania.

(ix) Rhode Island.

(x) Virginia.

(e) *Section 126(b) findings and affirmative technical determinations relating to impacts on ozone levels in Massachusetts*—(1) *Section 126(b) findings with respect to the 1-hour ozone standard in Massachusetts.* The Administrator finds that any existing major source or group of stationary sources emits NO_X in violation of the Clean Air Act section 110(a)(2)(d)(i) prohibition with respect to the 1-hour ozone standard in the State of Massachusetts if it is:

(i) In a category of large EGUs or large non-EGUs;

(ii) Located in one of the States (or portions thereof) listed in paragraph (e)(2) of this section; and

(iii) Within one of the "Named Source Categories" listed in the portion of Table F–1 in appendix F of this part describing the sources of NO_X emissions covered by the petition of the State of Massachusetts.

(2) *States that contain sources for which the Administrator is making section 126(b) findings with respect to the 1-hour ozone standard in Massachusetts.* The portions of States that contain sources of NO_X emissions for which the Administrator is making section 126(b) findings under paragraph (e)(1) of this section are:

(i) All counties in West Virginia located within a 3-county-wide band of the Ohio River, as shown in appendix F, Figure F–4, of this part.

(ii) [Reserved]

(3) *Affirmative technical determinations with respect to the 8-hour ozone standard in Massachusetts.* The Administrator of EPA finds that any existing major source or group of stationary sources

emits NO_X in amounts that contribute significantly to nonattainment in, or interfere with maintenance by, the State of Massachusetts, with respect to the 8-hour NAAQS for ozone if it is:

(i) In a category of large EGUs or large non-EGUs;

(ii) Located in one of the States (or portions thereof) listed in paragraph (e)(4) of this section; and

(iii) Within one of the "Named Source Categories" listed in the portion of Table F–1 in appendix F of this part describing the sources of NO_X emissions covered by the petition of the State of Massachusetts.

(4) *States or portions of States that contain sources for which EPA is making an affirmative technical determination with respect to the 8-hour ozone standard in Massachusetts.* The portions of States that contain sources for which EPA is making an affirmative technical determination are:

(i) All counties in Ohio located within a 3-county-wide band of the Ohio River, as shown in appendix F, Figure F–4, of this part.

(ii) All counties in West Virginia located within a 3-county-wide band of the Ohio River, as shown in appendix F, Figure F–4, of this part.

(f) *Affirmative technical determinations relating to impacts on ozone levels in New Hampshire*—(1) *Affirmative technical determinations with respect to the 8-hour ozone standard in New Hampshire.* The Administrator of EPA finds that any existing or new major source or group of stationary sources emits or would emit NO_X in amounts that contribute significantly to nonattainment in, or interfere with maintenance by, the State of New Hampshire, with respect to the 8-hour NAAQS for ozone if it is or will be:

(i) In a category of large EGUs or large non-EGUs;

(ii) Located in one of the States (or portions thereof) listed in paragraph (f)(2) of this section; and

(iii) Within one of the "Named Source Categories" listed in the portion of Table F–1 of appendix F of this part describing the sources of NO_X emissions covered by the petition of the State of New Hampshire.

(2) *States or portions of States that contain sources for which EPA is making an affirmative technical determination with respect to the 8-hour ozone standard in New Hampshire.* The States that contain sources for which EPA is making an affirmative technical determination are:

(i) Connecticut.

(ii) Delaware.

(iii) District of Columbia.

(iv) Maryland.

(v) Massachusetts.

(vi) New Jersey.

(vii) New York.

(viii) Pennsylvania.

(ix) Rhode Island.

(g) *Section 126(b) findings relating to impacts on ozone levels in the State of New York*—(1) *Section 126(b) findings with respect to the 1-hour ozone standard in the State of New York.* The Administrator finds that any existing or new major source or group of stationary sources emits or would emit NO_X in violation of the Clean Air Act section 110(a)(2)(d)(i) prohibition with respect to the 1-hour ozone standard in the State of New York if it is or will be:

(i) In a category of large EGUs or large non-EGUs;

(ii) Located in one of the States (or portions thereof) listed in paragraph (g)(2) of this section; and

(iii) Within one of the "Named Source Categories" listed in the portion of Table F–1 in appendix F of this part describing the sources of NO_X emissions covered by the petition of the State of New York.

(2) *States or portions of States that contain sources for which the Administrator is making section 126(b) findings with respect to the 1-hour ozone standard in New York.* The States, or portions of States, that contain sources of NO_X emissions for which the Administrator is making section 126(b) findings under paragraph (g)(1) of this section are:

(i) Delaware.

(ii) District of Columbia.

(iii) Portion of Indiana located in OTAG Subregions 2 and 6, as shown in appendix F, Figure F–6, of this part.

(iv) Portion of Kentucky located in OTAG Subregion 6, as shown in appendix F, Figure F–6, of this part.

(v) Maryland.

(vi) Portion of Michigan located in OTAG Subregion 2, as shown in appendix F, Figure F–6, of this part.

(vii) Portion of North Carolina located in OTAG Subregions 6 and 7, as shown in appendix F, Figure F–6, of this part.

(viii) New Jersey.

(ix) Ohio.

(x) Pennsylvania.

(xi) Virginia.

(xii) West Virginia.

(h) *Section 126(b) findings and affirmative technical determinations relating to impacts on ozone levels in the State of Pennsylvania*—(1) *Section 126(b) findings with respect to the 1-hour ozone standard in the State of Pennsylvania.* The Administrator finds that any existing or new major source or group of stationary sources emits or would emit NO_X in violation of the Clean Air Act section 110(a)(2)(d)(i) prohibition with respect to the 1-hour ozone standard in the State of Pennsylvania if it is or will be:

(i) In a category of large EGUs or large non-EGUs;

(ii) Located in one of the States (or portions thereof) listed in paragraph (h)(2) of this section; and (iii) Within one of the "Named Source Categories" listed in the portion of Table F–1 in appendix F of this part describing the sources of NO_X emissions covered by the petition of the State of Pennsylvania.

(2) *States that contain sources for which the Administrator is making section 126(b) findings with respect to the 1-hour ozone standard in Pennsylvania.* The States that contain sources of NO_X emissions for which the Administrator is making section 126(b) findings under paragraph (h)(1) of this section are:

(i) North Carolina.

(ii) Ohio.

(iii) Virginia.

(iv) West Virginia.

(3) *Affirmative technical determinations with respect to the 8-hour ozone standard in Pennsylvania.* The Administrator of EPA finds that any existing or new major source or group of stationary sources emits or would emit NO_X in amounts that contribute significantly to nonattainment in, or interfere with maintenance by, the State of Pennsylvania, with respect to the 8-hour NAAQS for ozone:

(i) In a category of large EGUs or large non-EGUs;

(ii) Located in one of the States (or portions thereof) listed in paragraph (h)(4) of this section; and

(iii) Within one of the "Named Source Categories" listed in the portion of Table F–1 in appendix F of this part describing the sources of NO_X emissions covered by the petition of the State of Pennsylvania.

(4) *States or portions of States that contain sources for which EPA is making an affirmative technical determination with respect to the 8-hour ozone standard in Pennsylvania.* The States that contain sources for which EPA is making an affirmative technical determination are:

(i) Alabama.

(ii) Illinois.

(iii) Indiana.

(iv) Kentucky.

(v) Michigan.

(vi) Missouri.

(vii) North Carolina.

(viii) Ohio.

(ix) Tennessee.

(x) Virginia.

(xi) West Virginia.

(i) *Withdrawal of section 126 findings.* Notwithstanding any other provision of this subpart, a finding under paragraphs (c), (e)(1) and (e)(2), (g), and (h)(1) and (h)(2) of this section as to a particular major source or group of stationary sources in a particular State will be deemed to be withdrawn, and the corresponding part of the relevant petition(s) denied, if the Administrator issues a final action putting in place implementation plan provisions that comply with the requirements of §§ 51.121 and 51.122 of this chapter for such State.

(j) *Section 126 control remedy*. The Federal NO_X Budget Trading Program in part 97 of this chapter applies to the owner or operator of any new or existing large EGU or large non-EGU as to which the Administrator makes a finding under section 126(b) of the Clean Air Act pursuant to the provisions of paragraphs (c), (e)(1) and (e)(2), (g), and (h)(1) and (h)(2) of this section.

(k) *Stay of findings with respect to the 8-hour ozone standard.* Notwithstanding any other provisions of this subpart, the effectiveness of paragraphs (d), (e)(3) and (e)(4), (f), (h)(3) and (h)(4) of this section is stayed.

(l) *Temporary stay of rules.* Notwithstanding any other provisions of this subpart, the effectiveness of this section is stayed from July 26, 1999 until February 17, 2000.

[64 FR 28318, May 25, 1999, as amended at 64 FR 33961, June 24, 1999; 65 FR 2042, Jan. 13, 2000; 65 FR 2726, Jan. 18, 2000]

EFFECTIVE DATE NOTE: At 69 FR 31505, June 3, 2004, § 52.34 was amended by revising paragraphs (c)(2)(vi) and (g)(2)(vi), effective July 6, 2004. For the convenience of the user, the revised text follows:

§ 52.34 Action on petitions submitted under section 126 relating to emissions of nitrogen oxides.

* * * * *

(c) * * *
(2) * * *
(vi) Portion of Michigan located south of 44 degrees latitude in OTAG Subregion 2, as shown in appendix F, Figure F–2, of this part.

* * * * *

(g) * * *
(2) * * *
(vi) Portion of Michigan located south of 44 degrees latitude in OTAG Subregion 2, as shown in appendix F, Figure F–6, of this part.

* * * * *

Subpart B—Alabama

§ 52.50 Identification of plan.

(a) *Purpose and scope.* This section sets forth the applicable State implementation plan for Alabama under section 110 of the Clean Air Act, 42 U.S.C. 7401, and 40 CFR part 51 to meet national ambient air quality standards.

(b) *Incorporation by reference.* (1) Material listed in paragraph (c) and (d) of this section with an EPA approval date prior to January 1, 2003, was approved for incorporation by reference by the Director of the Federal Register in accordance with 5 U.S.C. 552(a) and 1 CFR part 51. Material is incorporated as it exists on the date of the approval, and notice of any change in the material will be published in the FEDERAL REGISTER. Entries in paragraphs (c) and (d) of this section with EPA approval dates after January 1, 2003, will be incorporated by reference in the next update to the SIP compilation.

(2) EPA Region 4 certifies that the rules/regulations provided by EPA in the SIP compilation at the addresses in paragraph (b)(3) of this section are an exact duplicate of the officially promulgated State rules/regulations which have been approved as part of the State implementation plan as of January 1, 2003.

(3) Copies of the materials incorporated by reference may be inspected at the Region 4 EPA Office at 61 Forsyth Street, SW., Atlanta, GA 30303; the EPA, Office of Air and Radiation Docket and Information Center, Room B–108, 1301 Constitution Avenue, (Mail Code 6102T) NW., Washington, DC 20460; or at the National Archives and Records Administration (NARA). For information on the availability of this material at NARA, call 202–741–6030, or go to: *http://www.archives.gov/federal_register/code_of_federal_regulations/ibr_locations.html.*

(c) EPA approved Alabama regulations.

EPA APPROVED ALABAMA REGULATIONS

State citation	Title/subject	State effective date	EPA approval date	Explanation
	Chapter No. 335–3–1 General Provision			
Section 335–3–1–.01.	Purpose	06/22/89	03/19/90 55 FR 10062	
Section 335–3–1–.02.	Definitions	08/10/00	12/08/00 65 FR 76940	
Section 335–3–1–.03.	Ambient Air Quality Standards.	10/13/98	03/01/99 64 FR 9918	

EPA APPROVED ALABAMA REGULATIONS—Continued

State citation	Title/subject	State effective date	EPA approval date	Explanation
Section 335–3–1–.04.	Monitoring, Records, and Reporting.	10/15/96	06/06/97 62 FR 30991	
Section 335–3–1–.05.	Sampling and Test Methods	06/22/89	03/19/90 55 FR 10062	
Section 335–3–1–.06.	Compliance Schedule	10/15/96	06/06/97 62 FR 30991	
Section 335–3–1–.07.	Maintenance and Malfunctioning of Equipment; Reporting.	10/15/89	03/19/90 55 FR 10062	
Section 335–3–1–.08.	Prohibition of Air Pollution	08/10/00	12/08/00 65 FR 76940	
Section 335–3–1–.09.	Variances	10/15/96	06/06/97 62 FR 30991	
Section 335–3–1–.10.	Circumvention	06/22/89	03/19/90 55 FR 10062	
Section 335–3–1–.11.	Severability	10/15/96	06/06/97 62 FR 30991	
Section 335–3–1–.12.	Bubble Provision	06/22/89	03/19/90 55 FR 10062	
Section 335–3–1–.13.	Credible Evidence	04/13/99	11/03/99 64 FR 59633	
Section 335–3–1–.14.	Emissions Reporting Requirements Relating to Budgets for NO_X Emissions.	04/06/01	07/16/01 66 FR 36921	
Section 335–3–1–.15.	Emissions Inventory Reporting Requirements.	04/03/03	04/24/03 68 FR 20077	
Chapter No. 335–3–2 Air Pollution Emergency				
Section 335–3–2–.01.	Air Pollution Emergency	06/22/89	03/19/90 55 FR 10062	
Section 335–3–2–.02.	Episode Criteria	08/10/00	12/08/00 65 FR 76940	
Section 335–3–2–.03.	Special Episode Criteria	06/22/89	03/19/90 55 FR 10062	
Section 335–3–2–.04.	Emission Reduction Plans	06/22/89	03/19/90 55 FR 10062	
Section 335–3–2–.05.	Two Contaminant Episode	06/22/89	03/19/90 55 FR 10062	
Section 335–3–2–.06.	General Episodes	06/22/89	03/19/90 55 FR 10062	
Section 335–3–2–.07.	Local Episodes	06/22/89	03/19/90 55 FR 10062	
Section 335–3–2–.08.	Other Sources	10/15/96	06/06/97 62 FR 30991	
Section 335–3–2–.09.	Other Authority Not Affected	06/22/89	03/19/90 55 FR 10062	

EPA APPROVED ALABAMA REGULATIONS—Continued

State citation	Title/subject	State effective date	EPA approval date	Explanation
Chapter No. 335–3–3 Control of Open Burning and Incineration				
Section 335–3–3–.01.	Open Burning	04/03/03	04/24/03 68 FR 20077	
Section 335–3–3–.02.	Incinerators	06/22/89	03/19/90 55 FR 10062	
Section 335–3–3–.03.	Incineration of Wood, Peanut, and Cotton Ginning Waste.	08/10/00	12/08/00 65 FR 76940	
Chapter No. 335–3–4 Control of Particulate Emissions				
Section 335–3–4–.01.	Visible Emissions	10/15/96	06/06/97 62 FR 30991	
Section 335–3–4–.02.	Fugitive Dust and Fugitive Emissions.	10/15/96	06/06/97 62 FR 30991	
Section 335–3–4–.03.	Fuel Burning Equipment	10/15/96	06/06/97 62 FR 30991	
Section 335–3–4–.04.	Process Industries—General	10/15/96	06/06/97 62 FR 30991	
Section 335–3–4–.05.	Small Foundry Cupola	06/22/89	03/19/90 55 FR 10062	
Section 335–3–4–.06.	Cotton Gins	06/22/89	03/19/90 55 FR 10062	
Section 335–3–4–.07.	Kraft Pulp Mills	10/15/96	06/06/97 62 FR 30991	
Section 335–3–4–.08.	Wood Waste Boilers	08/10/00	12/08/00 65 FR 76940	
Section 335–3–4–.09.	Coke Ovens	08/10/00	12/08/00 65 FR 76940	
Section 335–3–4–.10.	Primary Aluminum Plants	06/22/89	03/19/90 55 FR 10062	
Section 335–3–4–.11.	Cement Plants	10/15/96	06/06/97 62 FR 30991	
Section 335–3–4–.12.	Xylene Oxidation Process	06/22/89	03/19/90 55 FR 10062	
Section 335–3–4–.13.	Sintering Plants	06/22/89	03/19/90 55 FR 10062	
Section 335–3–4–.14.	Grain Elevators	10/15/96	06/06/97 62 FR 30991	
Section 335–3–4–.15.	Secondary Lead Smelters	10/15/96	06/06/97 62 FR 30991	
Section 335–3–4–.17.	Steel Mills Located in Etowah County.	10/15/96	06/06/97 62 FR 30991	
Chapter No. 335–3–5 Control of Sulfur Compound Emissions				
Section 335–3–5–.01.	Fuel Combustions	10/15/96	06/06/97 62 FR 30991	
Section 335–3–5–.02.	Sulfuric Acid Plants	10/15/96	06/06/97 62 FR 30991	

EPA APPROVED ALABAMA REGULATIONS—Continued

State citation	Title/subject	State effective date	EPA approval date	Explanation
Section 335–3–5–.03.	Petroleum Production	08/10/00	12/08/00 65 FR 76940	
Section 335–3–5–.04.	Kraft Pulp Mills	08/10/00	12/08/00 65 FR 76940	
Section 335–3–5–.05.	Process Industries—General	06/22/89	03/19/90 55 FR 10062	
Chapter No. 335–3–6 Control of Organic Emissions				
Section 335–3–6–.01.	Applicability	10/15/96	06/06/97 62 FR 30991	
Section 335–3–6–.02.	VOC Water Separation	06/22/89	03/19/90 55 FR 10062	
Section 335–3–6–.03.	Loading and Storage of VOC	06/22/89	03/19/90 55 FR 10062	
Section 335–3–6–.04.	Fixed-Roof Petroleum Liquid Storage Vessels.	10/15/96	06/06/97 62 FR 30991	
Section 335–3–6–.05.	Bulk Gasoline Plants	10/15/96	06/06/97 62 FR 30991	
Section 335–3–6–.06.	Bulk Gasoline Terminals	08/10/00	12/08/00 65 FR 76940	
Section 335–3–6–.07.	Gasoline Dispensing Facilities—Stage I.	10/15/96	06/06/97 62 FR 30991	
Section 335–3–6–.08.	Petroleum Refinery Sources	06/22/89	03/19/90 55 FR 10062	
Section 335–3–6–.09.	Pumps and Compressors	06/22/89	03/19/90 55 FR 10062	
Section 335–3–6–.10.	Ethylene Producing Plants	06/22/89	03/19/90 55 FR 10062	
Section 335–3–6–.11.	Surface Coating	10/15/96	06/06/97 62 FR 30991	
Section 335–3–6–.12.	Solvent Metal Cleaning	10/15/96	06/06/97 62 FR 30991	
Section 335–3–6–.13.	Cutback Asphalt	10/15/96	06/06/97 62 FR 30991	
Section 335–3–6–.14.	Petition for Alternative Controls.	06/22/89	03/19/90 55 FR 10062	
Section 335–3–6–.15.	Compliance Schedules	10/15/96	06/06/97 62 FR 30991	
Section 335–3–6–.16.	Test Methods and Procedures.	08/10/00	12/08/00 65 FR 76940	
Section 335–3–6–.17.	Manufacture of Pneumatic Tires.	10/15/95	06/06/97 62 FR 30991	
Section 335–3–6–.18.	Manufacture of Synthesized Pharmaceutical Products.	10/15/96	06/06/97 62 FR 30991	
Section 335–3–6–.19.	Reserved			

EPA APPROVED ALABAMA REGULATIONS—Continued

State citation	Title/subject	State effective date	EPA approval date	Explanation
Section 335–3–6–.20.	Leaks from Gasoline Tank Trucks and Vapor Collection Systems.	10/15/96	06/06/97 62 FR 30991	
Section 335–3–6–.21.	Leaks from Petroleum Refinery Equipment.	10/15/96	06/06/97 62 FR 30991	
Section 335–3–6–.22.	Graphic Arts	10/15/96	06/06/97 62 FR 30991	
Section 335–3–6–.23.	Petroleum Liquid Storage in External Floating Roof Tanks.	10/15/96	06/06/97 62 FR 30991	
Section 335–3–6–.24.	Applicability	10/15/96	06/06/97 62 FR 30991	
Section 335–3–6–.25.	VOC Water Separation	06/22/89	03/19/90 55 FR 10062	
Section 335–3–6–.26.	Loading and Storage of VOC	06/22/89	03/19/90 55 FR 10062	
Section 335–3–6–.27.	Fixed-Roof Petroleum Liquid Storage Vessels.	10/15/96	06/06/97 62 FR 30991	
Section 335–3–6–.28.	Bulk Gasoline Plants	10/15/96	06/06/97 62 FR 30991	
Section 335–3–6–.29.	Gasoline Terminals	10/15/96	06/06/97 62 FR 30991	
Section 335–3–6–.30.	Gasoline Dispensing Facilities Stage I.	10/15/96	06/06/97 62 FR 30991	
Section 335–3–6–.31.	Petroleum Refinery Sources	06/22/89	03/19/90 55 FR 10062	
Section 335–3–6–.32.	Surface Coating	10/15/96	06/06/97 62 FR 30991	
Section 335–3–6–.33.	Solvent Metal Cleaning	06/22/89	03/19/90 55 FR 10062	
Section 335–3–6–.34.	Cutback Asphalt	10/15/96	06/06/97 62 FR 30991	
Section 335–3–6–.35.	Petition for Alternative Controls.	06/22/89	03/19/90 55 FR 10062	
Section 335–3–6–.36.	Compliance Schedules	10/15/96	06/06/97 62 FR 30991	
Section 335–3–6–.37.	Test Methods and Procedures.	10/15/96	06/06/97 62 FR 30991	
Section 335–3–6–.38.	Manufacture of Pneumatic Tires.	06/22/89	03/19/90 55 FR 10062	
Section 335–3–6–.39.	Manufacture of Synthesized Pharmaceutical Products.	10/15/96	06/06/97 62 FR 30991	
Section 335–3–6–.40.	Reserved			
Section 335–3–6–.41.	Leaks from Gasoline Tank Trucks and Vapor Collection Systems.	10/15/96	06/06/97 62 FR 30991	
Section 335–3–6–.42.	Leaks from Petroleum Refinery Equipment.	10/15/96	06/06/97 62 FR 30991	

EPA APPROVED ALABAMA REGULATIONS—Continued

State citation	Title/subject	State effective date	EPA approval date	Explanation
Section 335–3–6–.43.	Graphic Arts	06/22/89	03/19/90 55 FR 10062	
Section 335–3–6–.44.	Petroleum Liquid Storage in External Floating Roof Tanks.	10/15/96	06/06/97 62 FR 30991	
Section 335–3–6–.45.	Large Petroleum Dry Cleaners.	10/15/96	06/06/97 62 FR 30991	
Section 335–3–6–.46.	Aerospace Assembly and Component and Component Coatings Operation.	06/22/89	03/19/09 55 FR 10062	
Section 335–3–6–.47.	Leaks from Coke by-Product Recovery Plant Equipment.	10/15/96	06/06/97 62 FR 30991	
Section 335–3–6–.48.	Emissions from Coke by-Product Recovery Plant Coke Oven Gas Bleeder.	10/15/96	06/06/97 62 FR 30991	
Section 335–3–6–.49.	Manufacture of Laminated Countertops.	06/22/89	03/19/90 55 FR 10062	
Section 335–3–6–.50.	Paint Manufacture	10/15/96	06/06/97 62 FR 30991	
Section 335–3–6–.53.	List of EPA Approved and Equivalent Test Methods and Procedures for the Purpose of Determining VOC Emissions.	06/26/91	09/27/91 58 FR 50262	
Chapter No. 335–3–7 Carbon Monoxide Emissions				
Section 335–3–7–.01.	Metals Productions	06/22/89	03/19/90 55 FR 10062	
Section 335–3–7–.02.	Petroleum Processes	06/22/89	03/19/90 55 FR 10062	
Chapter No. 335–3–8 Nitrogen Oxides Emissions				
Section 335–3–8–.01.	Standards for Portland Cement Kilns.	04/06/01	07/17/01 66 FR 36921	
Section 335–3–8–.02.	Nitric Acid Manufacturing	10/15/96	06/06/97 62 FR 30991	
Section 335–3–8–.03.	NO_X Emissions from Electric Utility Generating Units.	10/24/00	11/07/01 66 FR 56223	
Section 335–3–8–.04.	Standards for Stationary Reciprocating Internal Combustion Engines (Reserved).	04/06/01	07/17/01 66 FR 36921	
Section 335–3–8–.05.	NO_X Budget Trading Program.	04/06/01	07/17/01 66 FR 36921	
Section 335–3–8–.06.	Authorized Account Representative for NO_X Budget Sources.	04/06/01	07/17/01 66 FR 36921	
Section 335–3–8–.07.	Permits	04/06/01	07/17/01 66 FR 36921	
Section 335–3–8–.08.	Compliance Certification	04/06/01	07/17/01 66 FR 36921	
Section 335–3–8–.09.	NO_X Allowance Allocations	04/06/01	07/17/01 66 FR 36921	

EPA APPROVED ALABAMA REGULATIONS—Continued

State citation	Title/subject	State effective date	EPA approval date	Explanation
Section 335–3–8–.10.	NO_X Allowance Tracking System.	04/03/03	04/24/03 68 FR 20077	
Section 335–3–8–.11.	NO_X Allowance Transfers	04/06/01	07/17/01 66 FR 36921	
Section 335–3–8–.12.	Monitoring and Reporting	04/06/01	07/17/01 66 FR 36921	
Section 335–3–8–.13.	Individual Unit Opt-ins	05/07/02	07/17/01 66 FR 36921	
Section 335–3–8–.14.	New Combustion Sources	04/06/01	07/17/01 66 FR 36921	
Chapter No. 335–3–9 Control Emissions From Motor Vehicles				
Section 335–3–9–.01.	Visible Emission Restriction for Motor Vehicles.	10/15/96	06/06/97 62 FR 30991	
Section 335–3–9–.02.	Ignition System and Engine Speed.	08/10/00	12/08/00 65 FR 76940	
Section 335–3–9–.03.	Crankcase Ventilation Systems.	08/10/00	12/08/00 65 FR 76940	
Section 335–3–9–.04.	Exhaust Emission Control Systems.	06/22/89	03/19/90 55 FR 10062	
Section 335–3–9–.05.	Evaporative Loss Control Systems.	06/22/89	03/19/90 55 FR 10062	
Section 335–3–9–.06.	Other Prohibited Acts	08/10/00	12/08/00 65 FR 76940	
Section 335–3–9–.07.	Effective Date	10/15/96	06/06/97 62 FR 30991	
Chapter No. 335–3–12 Continuous Monitoring Requirements for Existing Sources				
Section 335–3–12–.01.	General	06/22/89	03/19/90 55 FR 10062	
Section 335–3–12–.02.	Emission Monitoring and Reporting Requirements.	02/17/98	09/14/98 63 FR 49005	
Section 335–3–12–.03.	Monitoring System Malfunction.	06/22/89	03/19/90 55 FR 10062	
Section 335–3–12–.04.	Alternate Monitoring and Reporting Requirements.	06/22/89	03/19/90 55 FR 10062	
Section 335–3–12–.05.	Exemptions and Extensions	06/22/89	03/19/90 55 FR 10062	
Chapter No. 335–3–13 Control of Fluoride Emissions				
Section 335–3–13–.01.	General	10/15/96	06/06/97 62 FR 30991	
Section 335–3–13–.02.	Superphosphoric Acid Plants	10/15/96	06/06/97 62 FR 30991	
Section 335–3–13–.03.	Diammonium Phosphate Plants.	10/15/96	06/06/97 62 FR 30991	

EPA APPROVED ALABAMA REGULATIONS—Continued

State citation	Title/subject	State effective date	EPA approval date	Explanation
Section 335–3–13–.04.	Triple Superphosphoric Plants.	10/15/96	06/06/97 62 FR 30991	
Section 335–3–13–.05.	Granular Triple Superphosphoric Storage Facilities.	10/15/96	06/06/97 62 FR 30991	
Section 335–3–13–.06.	Wet Process Phosphoric Acid Plants.	10/15/96	06/06/97 62 FR 30991	
Chapter No. 335–3–14 Air Permits				
Section 335–3–14–.01.	General Provisions	02/17/98	09/14/98 63 FR 49008	
Section 335–3–14–.02.	Permit Procedures	10/15/96	06/06/97 62 FR 30991	
Section 335–3–14–.03.	Standards for Granting Permits.	08/10/96	12/02/00 65 FR 76940	
Section 335–3–14–.04.	Air Permits Authorizing Construction in Clean Air Areas (prevention of Significant Deterioration (PSD)).	02/05/02	04/20/02 67 FR 17288	
Section 335–3–14–.05.	Air Permits Authorizing Construction in or Near Nonattainment Areas.	08/10/00	12/02/00 65 FR 76940	
Chapter No. 335–3–15 Synthetic Minor Operating Permits				
Section 335–3–15–.01.	Definitions	10/15/96	06/06/97 62 FR 30991	
Section 335–3–15–.02.	General Provisions	08/10/00	12/02/00 65 FR 76940	
Section 335–3–15–.03.	Applicability	11/23/93	10/20/94 59 FR 52916	
Section 335–3–15–.04.	Synthetic Minor Operating Permit Requirements.	10/15/96	06/06/97 62 FR 30991	
Section 335–3–15–.05.	Public Participation	10/15/96	06/06/97 62 FR 30991	
Chapter No. 335–3–17 Conformity of Federal Actions to State Implementation Plans				
Section 335–3–17–.01.	Transportation Conformity	04/03/03	04/24/03 68 FR 20077	
Section 335–3–17–.02.	General Conformity	03/27/98	05/11/00 65 FR 30361	
Chapter No. 335–3–20 Control of Fuels				
Section 335–3–20–.01.	Definitions	10/24/00	11/07/01 66 FR 56219	
Section 335–3–20–.02.	Control of Fuels	10/24/00	11/07/01 66 FR 56219	
Section 335–3–20–.03.	Recordkeeping, Reporting, and Testing.	10/24/00	11/07/01 66 FR 56219	

(d) EPA approved Alabama source specific requirements.

EPA APPROVED ALABAMA SOURCE-SPECIFIC REQUIREMENTS

Name of source	Permit No.	State effective date	EPA approval date	Explanation
None.				

(e) EPA approved Alabama non-regulatory provisions.

EPA APPROVED ALABAMA NON-REGULATORY PROVISIONS

Name of nonregulatory SIP provision	Applicable geographic or nonattainment area	State submittal date/effective date	EPA approval date	Explanation
Birmingham 1990 Baseline Emissions Inventory.	Birmingham Ozone Nonattainment Area.	11/13/92	06/04/99 64 FR 29961	
Alabama Interagency Transportation Conformity Memorandum of Agreement.		01/20/00	05/11/00 65 FR 30362.	
Alabama Fuel Waiver Request-Appendix II of Attainment Demonstration of the 1-hour NAAQS for Ozone for the Birmingham Nonattainment Area.	Birmingham Ozone Nonattainment Area.	12/01/00	11/07/01 66 FR 56220.	
Attainment Demonstration of the 1-hour NAAQS for Ozone for the Birmingham Nonattainment Area.	Birmingham Ozone Nonattainment Area.	12/01/00	11/07/01 66 FR 56224.	
Maintenance plan for the Birmingham area	Jefferson County and Shelby County.	01/30/04	03/12/04 69 FR 11800.	

[63 FR 70672, Dec. 22, 1998, as amended at 64 FR 9918, Mar. 1, 1999; 64 FR 29961, June 4, 1999; 64 FR 59635, Nov. 3, 1999; 65 FR 30361, 30362, May 11, 2000; 65 FR 76939, Dec. 8, 2000; 66 FR 36920, July 16, 2001; 66 FR 56219, 56224, Nov. 7, 2001; 67 FR 4669, Jan. 31, 2002; 67 FR 17288, Apr. 10, 2002; 67 FR 76317, Dec. 12, 2002; 68 FR 5222, Feb. 3, 2003; 68 FR 7174, Feb. 12, 2003; 68 FR 20077, Apr. 24, 2003; 69 FR 11800, Mar. 12, 2004]

§ 52.51 Classification of regions.

The Alabama plan was evaluated on the basis of the following classifications:

Air quality control region	Pollutant				
	Particulate matter	Sulfur oxides	Nitrogen dioxide	Carbon monoxide	Photochemical oxidants (hydrocarbons)
Alabama & Tombigbee Rivers Intrastate	II	III	III	III	III
Columbus (Georgia)-Phenix City (Alabama) Interstate	I	III	III	III	III
East Alabama Intrastate	I	III	III	III	III
Metropolitan Birmingham Intrastate	I	II	III	I	I
Mobile (Alabama)-Pensacola-Panama City (Florida)-Southern Mississippi Interstate	I	I	III	III	I
Southeast Alabama Intrastate	II	III	III	III	III
Tennessee River Valley (Alabama)-Cumberland Mountains (Tennessee) Interstate	I	I	III	III	III

[37 FR 10847, May 31, 1972]

§ 52.53 Approval status.

With the exceptions set forth in this subpart, the Administrator approves Alabama's plans for the attainment and maintenance of the national standards under section 110 of the Clean Air Act. Furthermore, the Administrator

finds the plans satisfy all requirements of Part D, Title I, of the Clean Air Act as amended in 1977. In addition, continued satisfaction of the requirements of Part D for the ozone portion of the SIP depends on the adoption and submittal of RACT requirements by July 1, 1980 for the sources covered by CTGs issued between January 1978 and January 1979 and adoption and submittal by each subsequent January of additional RACT requirements for sources covered by CTGs issued by the previous January.

[45 FR 37431, June 3, 1980]

§ 52.56 Review of new sources and modifications.

Part D conditional approval. The plan's provisions for review of new sources and modifications in nonattainment areas are approved on condition that the State submit any necessary corrections by March 9, 1984 and, during the interim, implement these regulations in a manner consistent with EPA requirements.

[48 FR 9860, Mar. 9, 1983]

§ 52.57 Control strategy: Sulfur oxides.

(a) The requirements of Subpart G of this chapter are not met since the Alabama plan does not provide for attainment and maintenance of the national standards for sulfur oxides in the vicinity of the Widows Creek Power Plant in Jackson County, Alabama. Therefore, Part 5.1, Fuel Combustion, of Chapter 5, Control of Sulfur Compound Emissions, of the rules and regulations of the State of Alabama, as adopted by the Alabama Air Pollution Control Commission on May 29, 1973, and amended on March 25, 1975, which is part of the revised sulfur oxide control strategy, is disapproved as it applies to the Widows Creek Plant. Part 5.1 of the Alabama rules and regulations as adopted on January 18, 1972, remains the implementation plan regulation applicable to that source.

(b) [Reserved]

[41 FR 42674, Sept. 28, 1976, as amended at 51 FR 40676, Nov. 7, 1986]

§ 52.58 Control strategy: Lead.

The lead plan submitted by the State on March 24, 1982, is disapproved because it fails to provide for the attainment of the lead standard throughout Alabama. The lead plan submitted by the State on October 7, 1985, and November 13, 1986, for Jefferson County is conditionally approved on the condition that the State by October 1, 1987, determine what additional control measures may be necessary, if any, to assure attainment and maintenance as expeditiously as practicable but no later than the applicable attainment deadline and submit those measures to EPA for approval, together with an appropriate demonstration of attainment. The provisions in the regulation submitted on October 7, 1985, that give the Jefferson County Health Officer discretion to vary the requirements of the regulation are approved as limits on that discretion, but any variances that may result from those provisions are not approved in advance and hence change the applicable implementation plan only when approved by EPA on a case-by-case basis.

[49 FR 18738, May 2, 1984, as amended at 52 FR 4291, Feb. 11, 1987]

§ 52.60 Significant deterioration of air quality.

(a) All applications and other information required pursuant to § 52.21 from sources located in the State of Alabama shall be submitted to the Division of Air Pollution Control, Alabama Air Pollution Control Commission, 645 South McDonough Street, Montgomery, Alabama 36103, rather than to EPA's Region IV Office.

(b) On March 24, 1987, the Alabama Department of Environmental Management submitted a letter committing the State of Alabama to require that modeling for PSD permits be done only in accordance with the "Guideline on Air Quality Models (Revised)" or other models approved by EPA.

[42 FR 22869, May 5, 1977, as amended at 46 FR 55518, Nov. 10, 1981; 52 FR 48812, Dec. 28, 1987]

§ 52.61 Visibility protection.

(a) The requirements of section 169A of the Clean Air Act are not met because the plan does not include approvable procedures for protection of visibility in mandatory Class I Federal areas.

(b) *Long-term strategy*. The provisions of §52.29 are hereby incorporated into the applicable plan for the State of Alabama.

[52 FR 45138, Nov. 24, 1987]

§52.62 Control strategy: Sulfur oxides and particulate matter.

In a letter dated May 29, 1987, the Alabama Department of Health and Environmental Control certified that no emission limits in the State's plan are based on dispersion techniques not permitted by EPA's stack height rules. The certification does not apply to: Alabama Electric Cooperative—Lowman Steam Plant; Alabama Power Company-Gorgas Steam Plant, Gaston Steam Plant, Greene County Steam Plant, Gadsden Steam Plant, Miller Steam Plant, and Barry Steam Plant; Alabama River Pulp; Champion International Corporation; Container Corporation of America; Exxon Company's Big Escambia Creek Treating Facility; General Electric's Burkville Plant; International Paper; Scott Paper Company; Tennessee Valley Authority's Colbert, and Widows Creek Steam Plant; Union Camp Corporation; and U.S. Steel.

[55 FR 5846, Feb. 20, 1990]

§52.63 PM_{10} State Implementation Plan development in group II areas.

On March 15, 1989, the State submitted a committal SIP for the cities of Leeds and North Birmingham in Jefferson County. The committal SIP contains all the requirements identified in the July 1, 1987, promulgation of the SIP requirements for PM_{10} at 52 FR 24681. The SIP commits the State to submit an emissions inventory, continue to monitor for PM_{10}, report data and to submit a full SIP if a violation of the PM_{10} and National Ambient Air Quality Standards is detected.

[56 FR 32514, July 17, 1991]

§52.64 [Reserved]

§52.65 Control Strategy: Nitrogen oxides.

On October 22, 1990, the Alabama Department of Environmental Management submitted a revision to Chapter 2, Control Strategy, by adding subsection 4.2.3. This revision addressed the strategy Alabama is using to implement provisions of the Prevention of Significant Deterioration regulations for nitrogen oxides.

[57 FR 24370, June 9, 1992]

§52.66 Control Strategy: Ozone.

(a) The redesignation request submitted by the State of Alabama, on March 16, 1995 for the Birmingham marginal ozone nonattainment area from nonattainment to attainment was disapproved on September 19, 1997.

(b) The State of Alabama is required to submit an attainment demonstration SIP for the Birmingham 1-hour ozone nonattainment area by April 27, 2001. For purposes of the SIP revision required by this section, EPA may make a finding as applicable under section 179(a)(1)–(4) of the CAA, 42 U.S.C. 7509(a)(1)–(4), starting the sanctions process set forth in section 179(a) of the CAA. Any such finding will be deemed a finding under §52.31(c) and sanctions will be imposed in accordance with the order of sanctions and the terms for such sanctions established in §52.31.

[62 FR 49158, Sept. 19, 1997, as amended at 65 FR 64357, Oct. 27, 2000; 65 FR 67796, Nov. 13, 2000]

§52.69 Original identification of plan section.

(a) This section identifies the original "Air Implementation Plan for the State of Alabama" and all revisions submitted by Alabama that were federally approved prior to December 1, 1998.

(b) The plan was officially submitted on January 25, 1972.

(c) The plan revisions listed below were submitted on the dates specified.

(1) Letter informing Governor of Florida of submittal of Alabama Implementation Plan submitted on March 21, 1972, by the Alabama Air Pollution Control Commission.

(2) Compliance schedules submitted on April 18, 1972, by the Alabama Air Pollution Control Commission.

(3) Clarifying comments on the plan submitted on April 28, 1972, by the Alabama Air Pollution Control Commission.

(4) Semi-annual report, miscellaneous non-regulatory additions to the

plan, compliance schedules and miscellaneous regulatory additions to Chapters 3, 4, 5 and 9 submitted on February 15, 1973, by the Alabama Air Pollution Control Commission.

(5) Transportation control plans submitted on April 24, 1973, by the Alabama Air Pollution Control Commission.

(6) Miscellaneous non-regulatory additions to the plan submitted on June 29, 1973, by the Alabama Air Pollution Control Commission.

(7) Miscellaneous non-regulatory additions and complex source regulation, Chapter 10, submitted on September 26, 1973, by the Alabama Air Pollution Control Commission.

(8) Plan revisions to Chapter 5 concerning sulfur compound emissions submitted on October 31, 1973, by the Alabama Air Pollution Control Commission.

(9) Revision to Part 4.10, Primary Aluminum Plants, and redefinition of "Solid Particulate Matter" in section 1.2.1 submitted on May 27, 1974, by the Alabama Air Pollution Control Commission.

(10) AQMA identifications submitted on June 17, 1974, by the Alabama Air Pollution Control Commission.

(11) Coke oven regulations, Part 4.9 excluding section 4.9.4, submitted on June 20, 1974, by the Alabama Air Pollution Control Commission.

(12) Revised limits on particulate emissions from Portland cement plants, submitted on June 4, 1975, by the Alabama Air Pollution Control Commission.

(13) Revised limits on sulfur dioxide and sulfuric acid mist emissions from sulfuric acid plants, submitted on July 25, 1975, by the Alabama Air Pollution Control Commission.

(14) Revised area classification system for fuel combustion sources of sulfur dioxide and initial classification of Counties, submitted on May 1 and October 9, 1975, respectively, by the Alabama Air Pollution Control Commission.

(15) Revised emergency level for photochemical oxidants (emergency episode control plan) submitted by the Alabama Air Pollution Control Commission on April 23, 1976.

(16) Revised SO_2 emissions from gas processing plants submitted by the Alabama Air Pollution Control Commission on July 21, 1976.

(17) Regulations equivalent to EPA's New Source Performance Standards (40 CFR part 60) and continuous monitoring requirements for existing stationary sources (40 CFR 51.19), submitted by the Alabama Air Pollution Control Commission on October 28, 1976.

(18) Revised regulations for the charging and pushing of coke in existing conventional batteries, submitted by the Alabama Air Pollution Control Commission on July 14, 1978.

(19) Part 4.12, dealing with particulate emissions from xylene oxidation, submitted by the Alabama Air Pollution Control Commission on September 13, 1978.

(20) 1979 implementation plan revisions for nonattainment areas (TSP and ozone), submitted on April 19, 1979, (as clarified by a letter of August 10, 1979), by the Alabama Air Pollution Control Commission.

(21) Revisions in permit regulations as follows: (i) Title of 16.3.2. is changed to "Permits to Construct in or near Nonattainment Areas;" (ii) a subparagraph (9), "Significant Impact," is added to paragraph 16.3.2.(b); (iii) paragraph 16.3.2.(c) is revised; and (iv) subparagraph 16.3.2.(d)(5) is deleted; these revisions were adopted on February 13, 1980, and submitted on February 20, 1980, by the Alabama Air Pollution Control Commission to correct deficiencies in the Part D revisions given conditional approval by EPA on November 26, 1979.

(22) 1979 implementation plan revisions for sulfur dioxide nonattainment areas in Colbert, Lauderdale, and Jackson Counties, adopted on August 28, 1979, and submitted on September 6, 1979 by the Alabama Air Pollution Control Commission.

(23) Request for an 18-month extension of the statutory deadline for submitting a plan to attain and maintain the secondary standard for sulfur dioxide in the Jackson County nonattainment area, submitted on September 6, 1979, by the Alabama Air Pollution Control Commission.

(24) Revision to the State Implementation Plan to delete the indirect source regulations submitted by the Alabama Air Pollution Control Commission on December 12, 1978.

(25) Revised emergency episode control plan, updating procedures and raising the alert level for ozone from 0.10 ppm to 0.15 ppm, submitted by the Alabama Air Pollution Control Commission on January 11, 1980.

(26) Revision to the State Implementation Plan for an air quality surveillance network was submitted by the Alabama Air Pollution Control Commission on January 9, 1980.

(27) Alternative compliance schedules for nine sources of volatile organic compounds, submitted by the Alabama Air Pollution Control Commission on July 3, 1980.

(28) Revisions to Chapter 6 of the Alabama Rules and Regulations were submitted by the Alabama Air Pollution Control Commission on April 1, 1981.

(29) Alternative TSP control strategy for 3M Company's Guin plant, submitted on February 4, 1981, by the Alabama Air Pollution Control Commission.

(30) Revisions in Chapters 12 and 13, adopting Federal NSPS and NESHAPS regulations by reference, submitted by the Alabama Air Pollution Control Commission on June 26, 1981.

(31) Alternative compliance schedules for VOC sources, submitted on June 25, 1981, by the Alabama Air Pollution Control Commission.

(32) Regulations providing for prevention of significant deterioration (additions to Chapter 16 of the Alabama regulations), submitted on January 29, 1981, by the Alabama Air Pollution Control Commission.

(33) Alternative particulate control requirements for Kimberly-Clark Corporation's #3 bark boiler, Coosa Pines (revisions in Part 4.8 of the Alabama regulations), submitted by the Alabama Air Pollution Control Commission on February 4 and August 31, 1981.

(34) Request for 18-month extension of the deadline for submitting a plan to attain and maintain the secondary ambient standard for particulate matter in the Etowah County nonattainment area, submitted on May 19, 1981, by the Alabama Air Pollution Control Commission.

(35) Revision for Jackson County secondary sulfur dioxide nonattainment area, submitted on June 9, 1980, by the Alabama Air Pollution Control Commission.

(36) Set II VOC regulations, submitted on February 12, 1982, by the Alabama Air Pollution Control Commission and on May 5, 1983, by the Alabama Department of Environmental Management.

(37) Provisions for new source review in nonattainment areas (changes in Chapter 16 of the regulations), submitted on March 31, 1981, by the Alabama Air Pollution Control Commission.

(38) Bubble for Union Camp Corporation's Prattville, Alabama kraft pulp mill, submitted on January 21, 1983, January 20, 1984, and March 9, 1984, by the Alabama Department of Environmental Management (ADEM).

(i) Incorporation by reference.

(A) Alabama Department of Environmental Management Resolution and Regulation 4.8.4, dealing with control of particulate emissions from wood waste boilers, was adopted on December 9, 1983.

(B) Alabama Environmental Management Commission Resolution and Regulation 4.7.5, dealing with particulate emissions from kraft pulp mills, was adopted on March 7, 1984.

(ii) Other material.

(A) None.

(39) Changes to air permit requirements, submitted on February 19, 1985, and on March 28, 1985, by the Alabama Department of Environmental Management (ADEM).

(i) Incorporation by reference.

(A) Amendment to ADEM Air Rules & Regulations Chapter 16.1, submitted on March 28, 1985, and State-adopted on March 13, 1985. Allows delegation of permitting authority to locals.

(B) Amendment to ADEM Air Rules & Regulations Chapter 16.1, 16.2, 16.3, and 16.4, submitted on February 19, 1985, and State-adopted on February 13, 1985. Consolidates Permit to Construct, Operate and Temporary Permit, into one Air Permit.

(ii) Additional information.

(A) None.

(40) Visibility new source review regulations as visibility monitoring strategy were submitted to EPA on November 20, 1985.

(i) Incorporated by reference.

(A) Letter of November 20, 1985, from the Alabama Department of Environmental Management, and the following regulation Changes to Paragraphs 16.3.2 and 16.4 to Address Visibility Requirements adopted by the Alabama Environmental Management Commission on November 13, 1985:

16.3.2(b)—(Permits to Construct in or Near Nonattainment Areas—Definitions)
16.3.2(f)—(Permits to Construct in or Near Nonattainment Areas—visibility protection provisions)
16.4.2—(Permits to Construct in Clean Air Areas—Definitions)
16.4.12—(Visibility Monitoring)
16.4.15—(Sources Impacting Federal Class I Areas—Additional Requirements)

(ii) Additional material.

(A) Narrative Visibility SIP which includes the State's visibility monitoring strategy.

(41) State implementation plan revisions, submitted by the Department of Environmental Management on May 17, 1985.

(i) Incorporation by reference.

(A) Amendments to Alabama Department of Environmental Management's (ADEM) Air Rules and Regulations: addition of Paragraphs 4.3.5, 4.7.6, 4.7.7, 4.8.3(a), 4.8.3(b), 4.8.3(c), revision of Paragraph 4.8.3, adopted on October 10, 1984.

(B) Resolution by the Alabama Environmental Management Commission adopting the proposed regulations into the ADEM's Air Rules and Regulations on October 10, 1984.

(ii) Other material.

(A) Dispersion modelling of area around Kimberly Clark Corporation's Talledega County facility.

(42) State implementation plan for attainment and maintenance of the lead standards in all areas except Jefferson County, submitted on March 28, 1985, by the Alabama Department of Environmental Management.

(i) Incorporation by reference.

(A) Regulation for existing secondary lead smelters located in Pike County, Alabama (Regulation 4.15.6), which was adopted by the Alabama Department of Environmental Management on March 13, 1985. Under applicable law, EPA approval is required for discretionary actions of the Director of the Alabama Department of Environmental Management that may increase lead concentrations in the ambient air.

(B) Letter of May 6, 1985 from Ababama Department of Environmental Management to EPA, and Regulation pertaining to secondary lead smelter exhaust stack gases (Regulation 4.15.3), which was adopted by the Alabama Air Pollution Control Commission on March 23, 1982.

(ii) Other material.

(A) Narrative SIP, titled, "State of Alabama'a Plan for the Attainment of the National Ambient Air Quality Standard for Lead," dated December 1984.

(43) [Reserved]

(44) Volatile Organic Compound regulation changes were submitted to EPA on September 23, 1985.

(i) Incorporation by reference.

(A) Letter of September 23, 1985 to EPA from Alabama Department of Environmental Management and changes to Chapter 6 of the Alabama Air Pollution Control Rules and Regulations (Control of Volatile Organic Compounds) which were adopted by the Alabama Environmental Management Commission on September 18, 1985, specifically, the revisions to 6.1.1(a), 6.1.2, and 6.1.3 and the addition of 6.1.4 and 6.1.5.

(ii) Other material—none.

(45) State implementation plan for attainment and maintenance of lead standards in Jefferson County, submitted on October 7, 1985, by the Alabama Department of Environmental Management, and on November 13, 1986, by the Jefferson County Health Department.

(i) Incorporation by reference.

(A) Jefferson County Department of Health Regulation 611, Secondary Lead Smelters (excluding paragraphs 6.11.2(a) and 6.11.2(b)) which was adopted on September 11, 1985.

(B) November 13, 1986, letter to EPA from the Jefferson County Department of Health, and Appendix C of the Alabama Lead SIP for Jefferson County (Revised Schedule for the RACT-plus

study) which was adopted on November 12, 1986.

(ii) Other material.

(A) Narrative SIP, entitled "State Implementation Plan for the Attainment of the National Ambient Air Quality Standard for Lead in Jefferson County" dated September 1984.

(46) Stack height regulations were submitted to EPA on September 26, 1986, by the Alabama Department of Environmental Management.

(i) Incorporation by reference.

(A) Letter of September 26, 1986, from the Alabama Department of Environmental Management, transmitting stack height regulations.

(B) Section 16.3.3, Stack Heights, of the Alabama air pollution control rules and regulations, which was adopted on September 18, 1986, by the Alabama Environmental Management Commission.

(ii) Other material—none.

(47) Revisions to Alabama's New Source Review regulations were submitted to EPA on April 17, 1987.

(i) Incorporation by reference.

(A) Letter of April 17, 1987, from the Alabama Department of Environmental Management.

(B) Revisions to Alabama regulation 16.3.2, adopted by the Alabama Department of Environmental Management (ADEM) on April 15, 1987.

(ii) Other material—none.

(48) Revised State Implementation Plan for attainment and maintenance of lead standards in Jefferson County, submitted on August 5, 1988, by the Alabama Department of Environmental Management.

(i) Incorporation by reference.

(A) Air permits incorporating revised regulations for existing secondary lead smelters located in Jefferson County, Alabama (Regulation 6.11), adopted by the Jefferson County Board of Health on May 11, 1988.

(B) [Reserved]

(ii) Other material. (A) Narrative SIP, entitled "State Implementation Plan for the Attainment of the National Ambient Air Quality Standard for Lead in Jefferson County," dated February 19, 1988.

(B) [Reserved]

(49) SO_2 revisions for Secondary Lead Smelters, submitted by the Alabama Department of Environmental Management on June 30, 1989.

(i) Incorporation by reference.

(A) The following revisions to Chapter 6 of Jefferson County Board of Health Air Pollution Control Rules and Regulations, which became effective June 14, 1989.

(*1*) 6.11.2(o)

(B) The following revisions to chapter 7 of Jefferson County Board of Health Air Pollution Control Rules and Regulations which became effective June 14, 1989 as follows:

(*1*) 7.5.3 (*3*) 7.5.5

(*2*) 7.5.4 (*4*) 7.5.6

(ii) Additional material. (A) Letter of June 30, 1989, submitted by the Alabama Department of Environmental Management.

(B) Modeling analysis for Interstate Lead Corporation which was submitted by Jefferson County, Alabama on April 5, 1989.

(50) Changes in Alabama's Regulations which were submitted to EPA on May 29, 1987, by the Alabama Department of Health and Environmental Management.

(i) Incorporation by reference.

(A) Changes in Alabama's Regulation which were adopted on May 20, 1987:

(1) Chapter 5, Control of Sulfur Compound Emissions: Section 5.1.1(d) & (e) and Sections 5.3.4 (Applicability), 5.3.4 (a) & (b), 5.3.5 (a) & (b), 5.3.6, 5.3.7, 5.3.8, & 5.3.9.

(ii) Other Material.

(A) Modeling analysis for Exxon Company's Big Escambia Creek Treating Facility and Tennessee Valley Authority's Colbert Steam Plant.

(51) The recodified Air Division Administrative Code Rules of the Alabama Department of Environmental Management submitted on October 31, 1989 as revisions to Alabama's State Implementation Plan. These rules became effective on June 22, 1989.

(i) Incorporation by reference.

(A) Alabama Department of Environmental Management Administrative Code Rules 335–3 and appendices A–F, revision effective June 22, 1989, except for the following rules:

335–3–1–.02(1)—Definitions: (b), (c), (j), (pp), (xx), (yy), (bbb), (ccc), (nnn), (sss), and (yyy).

335–3–2–.02—Episode Criteria: (4)(b); (4)(c), (d) and (e); and (5)(b), (c), (d), and (e); (6)(b), (c), (d), and (e).
335–3–4—Control of Particulate Emissions; .01(1)(a), (b), and (d)(1), (2), (3), (4), and (5); .01(2); and .04(1)(a)
335–3–5–.03—Petroleum Production: (4)
335–3–14—Permits: .03(1)(g)(1)

(ii) Other material—None.

(52) Provisions for PM_{10} submitted on June 29, 1988, and October 3, 1989, by the Alabama Department of Environmental Management.

(i) Incorporation by reference.

(A) The following revisions submitted on June 29, 1988, to Chapters 1, 2 and 16 were effective June 16, 1988. These Chapters were recodified as Chapters 335–3–1, 335–3–2 and 335–3–14, respectively, effective June 22, 1989.

(*1*) Definitions—1.2.1 recodified 335–3–1–.02(1) bbb, eee, nnn, and yyy.

(*2*) Air Pollution Emergency—Chapter 2 recodified as 335–3–2.

(*3*) Permits—Chapter 16 recodified as 335–3–14, except .03(1)(g)(1).

(B) The following revisions submitted on October 3, 1989, to Chapters 35–3–1 and 335–3–14 were effective September 21, 1989.

(*1*) Definitions—335–1–.02 (1) (yy) and (ccc).

(*2*) Permits—335–3–14.

(*i*) 335–3–14–.03(1)(g)(1).

(53) October 8, 1988, and March 15, 1989, revisions to Jefferson County's Implementation Plan for PM_{10} were submitted by the Alabama Department of Environmental Management. The submittal included a committal SIP.

(i) Incorporation by reference.

(A) The following revisions submitted on March 15, 1989, to chapters 1, 2, and 4 of Jefferson County Implementation Plan for PM_{10} were effective February 8, 1989.

Chapter I—Chapter I General Provisions:

1.3 (Definitions):

Soiling Index, PM_{10}, Particulate Matter, PM_{10} emission, Total Suspended Particulate, Citation, Control Device, Employee, Six Minute Average, Violator.

Chapter 2—Permits: 2.3.1(g)(1), (2), and (3); 2.3.2.(b)(11) and 20; 2.3.4 (a)(5); 2.3.2 (2); 2.4.2.(w) (1) and (2); 2.4.3; 2.4.8(h), 2.4.8(k) and (l); 2.4.12(a)(7) and 8; 2.4.15(e); and 2.4.19(a).

Chapter 4—Air Pollution Emergency: 4.3.4(b), (c), (d), and (e); 4.3.5(b), (c), (d), and (e); and 4.3.6(b), (c), (d), and (e).

(ii) Other material.

(A) March 15, 1989, letter from the Alabama Department of Environmental Management.

(54)–(55) [Reserved]

(56) Revisions to the VOC portion of the Alabama SIP were submitted on April 20, 1987, November 7, 1990, May 22, 1991, and October 4, 1991, and July 5, 1991, by the State of Alabama. These revisions were adopted on April 15, 1987; October 10, 1990; November 14, 1990, and May 8, 1991; September 18, 1991, respectively by the Jefferson County Board of Health.

(i) Incorporation by reference.

(A) Jefferson County Department of Health Air Pollution Control Program Rules and Regulations, Chapter 8 (Control of VOC Emissions) and Chapter 1 (Definitions) effective April 8, 1987.

(*1*) Chapter 1—General Provisions: Section 1.3.

(*2*) Chapter 8—Control of Volatile Organic Compound (VOC) Emissions, except for 8.16.13.

(ii) Other material—none.

(57) Revisions to Chapters 335–3–1 and 335–3–6 of the Alabama Department of Environmental Management Administrative Code which were submitted on October 19, 1989, and on July 5, 1991, and adopted into the Alabama Department of Environmental Management Administrative Code on August 16, 1989 and June 26, 1991.

(i) Incorporation by reference.

(A) Amendments to the Alabama regulations 335–3–1–.02, 335–3–6–.02(1); 335–3–6–.03(1); 335–3–6–.24(1); 335–3–6–.26; 335–3–6–.27; 335–3–6–.28; 335–3–6–.29; 335–3–6–.30; 335–3–6–.31; 335–3–6–.32; 335–3–6–.33; 335–3–6–.34; 335–3–6–.35; 335–3–6–.36; 335–3–6–.37 with the exception of Subsection 335–3–6–.37(10)(a); 335–3–6–.38; 335–3–6–.39; 335–3–6–40; 335–3–6–.41; 335–3–6–.42; 335–3–6–43; 335–3–6–44; 335–3–6–45; 335–3–6–.46; 335–3–6–.47; 335–3–6–.49; 335–3–6–.51; 335–3–6–.53 effective July 31, 1991.

(ii) Other material—None.

(58) Revisions to include NO_2 increment requirements in Chapter 2 of the SIP and the PSD regulations, Chapter 335–3–14 of the Alabama Department of Environmental Management Administrative Code which was submitted on October 22, 1990.

(i) Incorporation by reference.

(A) Revisions to 335–3–14–.04, "Air Permits Authorizing Construction in Clean Air Areas," of the Alabama Department of Enironmental Management Administrative Code, which became effective November 1, 1990.

(ii) *Other material.* (A) Letter dated October 22, 1990, from the Alabama Department of Environmental Management.

(B) Letter dated April 30, 1991, from the Alabama Department of Environmental Management regarding minimum program elements.

(59) [Reserved]

(60) Provisions for visible emissions were submitted by the Alabama Department of Environmental Management on June 11, 1979.

(i) Incorporation by reference.

(A) 335–3–4.01 Visible Emissions, adopted May 17, 1989.

(ii) Other material.

(A) None.

(61) Revisions to the Alabama SIP to correct errors and to add offset ratios which were submitted on November 10, 1992.

(i) Incorporation by reference.

(A) Amendments to the following sections of the Alabama regulations—335–3–6–.04(4), 335–3–14–.03(2)(b)15, 335–3–14–.03(2)(b)17, 335–3–14–.03(2)(b)18, 335–3–14–.03(2)(b)20, 335–3–14–.03(2)(c)2, 335–3–14–.03(2)(e), 335–3–14–.03(2)(g)1(i), 335–3–14–.03(2)(g)1(ii), and Appendix D—were adopted by the State on October 23, 1992.

(ii) Other material.

(A) Letter of November 10, 1992, from the Alabama Department of Environmental Management.

(62) The Alabama Department of Environmental Management has submitted revisions to chapter 11 of the Alabama Statute on November 13, 1992. These revision address the requirements of section 507 of Title V of the CAA and establish the Small Business Stationary Source Technical and Environmental Assistance Program (PROGRAM).

(i) Incorporation by reference.

(A) Alabama statute 11.1, effective November 13, 1993.

(ii) Additional information—None.

(63) Provisions for coke ovens were submitted by the Alabama Department of Environmental Management on September 25, 1985.

(i) Incorporation by reference.

(A) Alabama Department of Environmental Management Administrative Code, Chapter 335–3–4–.17, Steel Mills Located in Etowah County, adopted September 18, 1985.

(ii) Other material.

(A) None.

(64) Revisions to provide synthetic minor operating permit rules submitted by the Alabama Department of Environmental Management on December 20, 1993.

(i) Incorporation by reference.

(A) Alabama Department of Environmental Management Air Division Administrative Code, Chapter 335–3–4–.10, –11, –14, –15, and Appendix D, adopted November 23, 1993.

(ii) Other material. None.

(65) Revisions to the State of Alabama State Implementation Plan (SIP) concerning emission statements were submitted on November 13, 1992, by the Alabama Department of Environmental Management.

(i) Incorporation by reference. The Addition of Section 11.2 of the Alabama Regulations was effective on November 13, 1992.

(ii) *Other material.* Letter dated November 13, 1992, from the Alabama Department of Environmental Management.

(66) The Alabama Department of Environmental Management has submitted revisions to Alabama SIP on September 28, 1993. These revisions address the requirements necessary to change the Leeds area of Jefferson County, Alabama, from nonattainment to attainment for lead. The submittal includes the maintenance plan for the Leeds Area.

(i) Incorporation by reference.

(A) Plan for Maintenance of the NAAQS for Lead in the Jefferson County (Leeds) Area after Redesignation to Attainment Status effective on September 28, 1993.

(ii) Additional information. None.

(67) [Reserved]

(68) The State of Alabama submitted a SIP submittal to revise the ADEM Administrative Code for the Air Pollution Control Program on August 14,

1995. These revisions involve changes to Chapter 335–3–14—Air Permits.

(i) Incorporation by reference.

(1) Amendments to the following sections of the Alabama regulations—335–3–14–.04, and 335–3–14–.05 which were adopted on March 21, 1995.

(ii) Other material. None.

(69) The State of Alabama submitted revisions to the ADEM Administrative Code for the Air Pollution Control Program on October 30, 1995, and December 14, 1995. These revisions involve changes to Chapter 335–3–1—General Provisions.

(i) Incorporation by reference. Section 335–3–1–.02 (gggg) of the Alabama regulations adopted on November 28, 1995.

(ii) Other material. None.

(70) The State of Alabama submitted revisions to the ADEM Administrative Code for the Air Pollution Control Program on October 30, 1996. These revisions involve changes to Chapters 335–3–1, –2, –3, –4, –5, –6, –8, –9, –12, –13, –14, Appendices C, E, and F.

(i) Incorporation by reference. Chapters 335–3–1–.02(gggg)(23–25); 335–3–1–.04(1–2); 335–3–1–.06(3); 335–3–1–.08; 335–3–1–.09(11); 335–3–1–.11; 335–3–2–.02(c); 335–3–2–.08(3); 335–3–3–.01(8); 335–3–4–.01(1)(a–b), (3); 335–3–4–.04(5); 335–3–4–.07(6–7); 335–3–4–.08(2), (3), (3)(b), (4)(b); 335–3–4–.09(1)(4a–b), (4)(c); 335–3–4–.11(2); 335–3–4–.14(2)(a)2, (2)(b)3; 335–3–4–.15(5–6), (6)(e), (6)(g)1; 335–3–4–.17(4), (7–9); 335–3–5–.01(2), (2)(b), (4); 335–3–5–.02(1–3); 335–3–5–.03(4), (4)(b), (5)(b), (8); 335–3–5–.04(10)(d), (12)(b); 335–3–6–.01(3–6); 335–3–6–.04(4); 335–3–6–.05(3), (4), (5)(a), (5)(f), (6), (7); 335–3–6–.06(3)(a), (3)(a)3, (4–5); 335–3–6–.07(1), (2)(d), (3), (4), (4)(c), (5)(a), (5)(c), (7); 335–3–6–.11(1)(a), (1)(b–c), (2)(a), (2)(b–c), (3), (3)(b–c), (4)(a), (4)(b–d), (5)(a), (5)(b–c), (6)(a), (6)(b–c), (7)(a), (7)(b–c), (8)(a–c), (9)(a)3, (9)(b), (10)(a), (10)(b), (10)(c–d), (11)(a), (11)(b), (11)(c), (11)(d–e); 335–3–6–.12(4), (5), (6), (6)(b)3; 335–3–6–.13(2)(a); 335–3–6–.15(1)(a), (1)(b), (2)(a), (2)(c), (3)(a), (3)(b), (4)(a), (4)(c–d), (5); 335–3–6–.16(1)(e)1, (1)(e)2I, (2)(g)1, 335–3–6–.49(1), (5)(a); 335–3–6–.50(1); 335–3–6–.53(13); 335–3–8–.02(1); 335–3–9–.01(3); 335–3–12–.02(2); 335–3–13–.02(3); 335–3–13.03(3); 335–3–13–.04(3); 335–3–13–.05(3); 335–3–13–.06(3); 335–3–14–.01(1)(b–c), (1)(e), (1)(g), (1)(k), (1)(k)1–5, (6)(a), (6)(b), (6)(b)1, (6)(b)3, (6)(c), (7)(a)2, (7)(c–d); 335–3–14–.02(1)(a), (4)(b–c), (4)(e)1, (4)(e)4, (5)(a–c); 335–3–14–.03(1)(g)1–3, (1)(h)2(V), (2)(a), (2)(a)4(V), (2)(a)6(i–ii), (2)(a)7, (2)(a)7(i–ii), (2)(a)7(I), (2)(a)(7)(II)(iii), (2)(b–c), (2)(f–g); 335–3–14–.04(2), (2)(a)1(i–iii), (2)(b)1, (2)(c)2(i), (2)(c)4, (2)(c)6(i–ii), (2)(f), (2)(i), (2)(i)1, (2)(m)1, (2)(m)1(i), (2)(n)2, (2)(u)1, (2)(u)4, (2)(w)3, (6)5(b), (8)(a–d), (8)(e–f), (8)(g–h), (8)(h)3, (8)(k), (8)(l), (11)(a), (12)(a)(6–8), (12)(c), (13)(a), (15)(c), (15)(f–h), (17)(c), (18)(a), (18)(b)2–3, (18)(c), (18)(d), (19)(a), (19)(c); 335–3–14–.05(2)(c)1(ii), (2)(l), (3), (3)(c), (4)(c), (4)(c)2, (4)(d), (5–6), (6)(c), (7)(a), (9)(c)2, (9)(d), (11), (12)(a), (13)(b)7; 335–3–15–.01(b), (d–f), (h); 335–3–15–.02(3–4), (7)(c), (8)(f), (8)(h)2, (8)(h)4(i), (8)(h)4(iv), (9)(a)4(iv)1–3, (9)(a)4(iv)(V), (9)(a)6(i–ii), (9)(a)7, (9)(a)7(i–ii), (9)(a)7(ii)(I), (9)(a)7(iii), (9)(b–c), (9)(f–g); 335–3–15–.04(1)(a–d), (1)(e), (1)(g–h), (2)(a)(3)(c), (4)(a–b); and 335–3–15–.05(a) were adopted on October 15, 1996.

(ii) *Other material.* None.

(71) The State of Alabama submitted revisions to the ADEM Administrative Code for the Air Pollution Control Program on October 30, 1996. These revisions involve changes to Chapters 335–3–1, 335–3–3 and 335–3–6.

(i) Incorporation by reference. Chapters 335–3–1–.02(gggg)(24–27), 335–3–3–.01(9) and 335–3–6–.16 except for (5) were adopted on August 19, 1997.

(ii) Other material. None.

(72) The State of Alabama submitted revisions to the ADEM Administrative Code for the Air Pollution Control Program on March 5, 1998. These revisions involve changes to Chapters 335–3–1, 335–3–12, 335–3–14 and Appendix F.

(i) Incorporation by reference. Rules 335–3–1–.02(gggg), 335–3–12–.02(1)(b), 335–3–14–.01(7)(c), 335–3–14–.05(2)(c)2, 335–3–14–.05(3)(c), and Appendix F were adopted on February 17, 1998.

(ii) Other material. None.

[37 FR 10846, May 31, 1972. Redesignated at 63 FR 70672, Dec. 22, 1998]

EDITORIAL NOTE: For FEDERAL REGISTER citations affecting § 52.69, see the List of CFR Sections Affected, which appears in the Finding Aids section of the printed volume and on GPO Access.

Subpart C—Alaska

§52.70 Identification of plan.

(a) Title of plan: "State of Alaska Air Quality Control Plan."

(b) The plan was officially submitted on April 25, 1972.

(c) The plan revisions listed below were submitted on the dates specified.

(1) Modifications to the implementation plan including a revision to Title 18, Chapter 50, section 160 and other nonregulatory provisions submitted on June 22, 1972, by the Governor.

(2) Compliance schedules submitted on August 2, 1973, by the State of Alaska Department of Environmental Conservation.

(3) Compliance schedules submitted on August 23, 1973, by the State of Alaska Department of Environmental Conservation.

(4) Compliance schedules submitted on September 30, 1975, by the State of Alaska Department of Environmental Conservation.

(5) Compliance schedules submitted on January 6, 1976, by the State of Alaska Department of Environmental Conservation.

(6) Compliance schedules submitted on September 30, 1975, by the State of Alaska Department of Environmental Conservation.

(7) Part D attainment plans for the Anchorage and Fairbanks carbon monoxide nonattainment areas submitted by the Governor of Alaska on January 18, 1980 as follows:

VOLUME II. ANALYSIS OF PROBLEMS, CONTROL ACTIONS

Section III. *Areawide Pollutant Control Efforts,* Subsection A.

Carbon Monoxide, except subparts 1.c (Other areas) and 5.h (Fairbanks Emergency Avoidance Plan)

VOLUME III. APPENDICES

III–1 A Review of Carbon Monoxide Emissions from Motor Vehicles during Cold Temperature Operation

III–2 Cold Weather Related Strategy Support Development

III–3 Preliminary Assessment of Meteorological Conditions during Days of Ambient Air Quality Violations in Anchorage

III–4 Summary of the 1978 Fairbanks Voluntary Vehicle Emissions Inspection Program

III–5 Approach of Evaluating an Alaska I/M Program

III–6 Appendices to the Anchorage Air Quality Plan

III–7 Appendices to the Fairbanks Air Quality Plan

(8) On January 18, 1980, the State of Alaska Department of Environmental Conservation submitted a plan revision to meet the requirements of Air Quality Monitoring, 40 CFR part 58, subpart C, §58.20, as follows:

VOLUME II. ANALYSIS OF PROBLEMS, CONTROL ACTIONS

Section V. *Ambient Air Monitoring*

A. Purpose

C. Air Monitoring Network

E. Annual Review

(9) Provisions of a State Air Quality Control Plan submitted by the Governor of Alaska on January 18, 1980, as follows:

VOLUME II. ANALYSIS OF PROBLEMS, CONTROL ACTIONS

Section I. *Introduction*

A. Summary

B. Air Quality Control Regions

C. Attainment/Nonattainment Designations

Section II. *Alaskan Air Quality Control Programs*

A. State Program

B. Local Programs

C. Resource Needs

Section III. *Areawide Pollutant Control Efforts*

A. Carbon Monoxide, Subpart 1.c (Other areas)

B. Total Suspended Particulate Matter

C. Ice Fog

D. Open Burning—Forest Practices

Section IV. *Point Source Control Efforts*

A. Summary

B. Description of Source Categories and Pollutants

C. Summary of Major Emitting Sources

D. History of Alaskan Point Source Program

F. Local Program Enforcement

G. New Source Review and Approval

H. Compliance Assurance

I. State Air Quality Control Regulations

Section V. *Ambient Air Monitoring*

B. Description of Previous Air Monitoring Network

VOLUME III. APPENDICES

I–1 Summary of Public Hearings, Written Testimony, etc.

I–2 Recommendations for attainment/Nonattainment designations

II–1 Alaska Statutes, except section 46.03.170

II–2 Regulations of the Fairbanks North Star Borough, except section 8.04.070
II–3 Fairbanks North Star Borough/Alaska Department of Environmental Conservation Agreement
II–4 Municipality of Anchorage/Alaska Department of Environmental Conservation Agreement
II–5 Alaska State Department of Law Legal Opinion
IV–1 Summaries of Emission Inventories
IV–2 D. Permit to Operate for the Fairbanks Municipal Utilities System
IV–3 Testing Procedures
V–1 Air Quality Data

An amended Appendix II–5, "Alaska State Department of Law Legal Opinion" submitted by the State of Alaska Department of Environmental Conservation on February 29, 1980. Amendments to the January 18, 1980 submittal, submitted by the State of Alaska Department of Environmental Conservation on September 29, 1982 as follows:

VOLUME II. ANALYSIS OF PROBLEMS, CONTROL ACTIONS

Section I. *Introduction*
C. Attainment/Nonattainment Designations
Section III. *Areawide Pollutant Control Efforts*
D. Open Burning—Forest Practices
Section IV. *Point Source Control Efforts*
C. Summary of Major Emitting Sources
D. History of Alaskan Point Source Program
F. Local Program Enforcement
G. New Source Review and Approval
H. Compliance Assurance
I. State Air Quality Control Regulations
Section V. *Ambient Air Monitoring*
C. Air Monitoring Network
E. Annual Review

VOLUME III. APPENDICES

IV–4 ADEC Ambient Analysis Procedures

(10) On November 15, 1983 the State of Alaska Department of Environmental Conservation submitted a revision to add a lead strategy to the Alaska Implementation Plan.

(11) Provisions of a State Air Quality Control Plan submitted by the Alaska Department of Environmental Conservation on November 15, 1983, as follows:

VOLUME II. ANALYSIS OF PROBLEMS, CONTROL ACTIONS

Section I. *BACKGROUND*

A. INTRODUCTION
B. AIR QUALITY CONTROL REGIONS
C. ATTAINMENT/NONATTAINMENT DESIGNATIONS
D. PREVENTION OF SIGNIFICANT DETERIORATION DESIGNATIONS

Section II. *STATE AIR QUALITY CONTROL PROGRAM*

Section III. *AREAWIDE POLLUTANT CONTROL PROGRAM*

D. TOTAL SUSPENDED PARTICULATE MATTER
E. ICE FOG
F. OPEN BURNING
G. WOOD SMOKE POLLUTION CONTROL

Section IV. *POINT SOURCE CONTROL PROGRAM*

A. SUMMARY
1. Annual Review Report
B. STATE AIR QUALITY REGULATIONS
C. LOCAL PROGRAMS
D. DESCRIPTION OF SOURCE CATEGORIES AND POLLUTANTS
1. Typical Point Sources
2. Summary of Major Emitting Facilities
E. POINT SOURCE CONTROL
1. Introduction
F. FACILITY REVIEW PROCEDURES
1. Who needs a permit?
2. Standard Application Procedures
3. PSD Application Procedures, Preliminary report and meeting, Pre-construction monitoring, PSD application format
4. Nonattainment Application Procedures
G. APPLICATION REVIEW AND PERMIT DEVELOPMENT
1. Application Review
2. Permit Development Requirement, Monitoring and Testing Requirements, Ambient Monitoring, Continuous Emissions Monitoring, Source Testing
3. Prevention of Significant Deterioration Review, Basis of Program, PSD Regulations, PSD Analysis Procedure
4. Nonattainment Area Review
5. New Source Performance Standards Source Review
6. Visibility Review
7. Sources under EPA Review
H. PERMIT ISSUANCE REQUIREMENTS

Section V. *AMBIENT AIR MONITORING*

A. PURPOSE
B. COMPLETED AIR MONITORING PROJECTS
1. Carbon Monoxide
2. Nitrogen Oxides
3. Sulfur Dioxide
4. Ozone
5. Total Suspended Particulates (TSP)
6. Lead
C. AIR MONITORING NETWORK
1. Network Description
2. Station Designations
3. Air Quality Monitoring Procedures
4. Ambient Sampling for Specific Pollutants

E. ANNUAL REVIEW

VOLUME III. APPENDICES

Section II. *STATE AIR QUALITY CONTROL PROGRAM*

II.A. State Air Statutes, except section 46.03.170, State Attorney General Opinions on Legal Authority
II.B. Municipality of Anchorage/Cook Inlet/ADEC Agreements
II.C. Fairbanks North Star Borough Ordinances/FNSB & ADEC Agreements

Section III. *AREAWIDE POLLUTANT CONTROL PROGRAM*

III.G. Ordinance of the City and Borough of Juneau

Section IV. *POINT SOURCE CONTROL PROGRAM*

IV.1. PSD Area Classification and Reclassifications
A. Class I Area Boundaries
B. Areas Protected from Visibility Degradation
C. Reclassification
1. Limitations on PSD Reclassification
2. PSD Reclassification Procedures
IV.2. Compliance Assurance
IV.3. Testing Procedures

Section V. *AMBIENT AIR MONITORING*

ADEC Ambient Analysis Procedures

TITLE 18. ENVIRONMENTAL CONSERVATION, *CHAPTER 50. AIR QUALITY CONTROL,* Sections 021(d), 030(g), 040(a)(2), 040(c), 050(a)(2), 050(b)(4), 085, 300(a)(1), 300(a)(7), 400(d)(6), 500(d), 500(e), 510 (Editor's Note), 520(a), 520(b), 610(a), 620, 900(15), 900(39), 900(47), and 900(48).

(12) On September 29, 1982, the Commissioner of the Alaska Department of Environmental Conservation submitted a carbon monoxide attainment plan for the cities of Anchorage (section III.B) and Fairbanks (section III.C) as a revision to the Alaska State Implementation Plan. On November 15, 1983, a revision to this plan was submitted for the city of Anchorage. Supplement to the Anchorage and Fairbanks plans revisions to section III.A (Areawide Pollutant Control Program, Statewide Transportation Control Program) and a new State Regulation 18 AAC Chapter 52 (Emissions Inspection and Maintenance Requirements for Motor Vehicles) were submitted on May 31, 1985.

(i) Incorporation by reference.

(A) May 31, 1985 letter from the State of Alaska to EPA, and State Regulation 18 AAC 52 (Emissions Inspection and Maintenance Requirements for Motor Vehicles) as filed by the Commissioner for the State of Alaska on May 19, 1985.

(B) Page section III.B.8–3 of the Anchorage Transportation Control Program, Alaska Air Quality Control Plan, revised June 1, 1985 (emissions and air quality projections for Anchorage with vehicle inspection and maintenance program).

(C) Table C.6.a of the Fairbanks Transportation Control Program, Alaska Air Quality Control Plan [reasonable further progress required reductions for Fairbanks] (page section III.C.6–2) revised November 20, 1982.

(ii) Other material.

(A) Section III.A Statewide Transportation Control Program.

(B) Section III.B Anchorage Transportation Control Program.

(C) Section III.C Fairbanks Transportation Control Program.

(D) The I/M Program Design for the Fairbanks North Star Borough dated October 25, 1984.

(E) The I/M Program Design for the Municipality of Anchorage dated 1984.

(13) On June 26, 1987, the State of Alaska Department of Environmental Conservation submitted Section III.B.10–1 through III.B.10–6 (Anchorage Air Pollution Episode Curtailment Actions); Section III.C.10–1 through III.C.10–9 (Fairbanks Emergency Episode Prevention Plan); and minor modifications to Section III.C.5–7 (Fairbanks Inspection and Maintenance Program Design).

(i) Incorporation by reference.

(A) June 26, 1987 letter from the State of Alaska Department of Environmental Conservation to EPA Region 10.

(B) Section III.B.10–1 through III.B.10–6 of Volume II (Anchorage Air Pollution Episode Curtailment Actions) as adopted as an ordinance by the Anchorage Assembly on September 9, 1986.

(C) Section III.C.10–1 through III.C.10–9 of Volume II (Fairbanks Emergency Episode Prevention Plan) as adopted as an ordinance by the Assembly of the Fairbanks North Star Borough on December 19, 1985.

(D) Page number Section III.C.5–7 of Volume II (Fairbanks Inspection and Maintenance Design). This new page supercedes the current page number Section III.C.5–7 of the Alaska Air Quality Control Plan as adopted by the Alaska Department of Environmental Conservation on June 26, 1987.

(14) On June 26, 1987, the Commissioner of the Alaska Department of Environmental Conservation submitted revised rules regulating the height of stacks and the use of dispersion techniques, specifically revisions to 18 AAC 50.400(a), 18 AAC 50.530(c), 18 AAC 50.900(16), 18 AAC 50.900(20), 18 AAC 50.900(23), and 18 AAC 50.900.(29), and the deletion of 18 AAC 50.900(17).

(i) Incorporation by reference.

(A) June 26, 1987 letter from the State of Alaska Department of Environmental Conservation to EPA, Region 10.

(B) August 11, 1987 letter from the State of Alaska Department of Environmental Conservation to EPA, Region 10.

(C) 18 AAC 50.400(a) and 18 AAC 50.900 (16), (20), (23), and (29) as adopted by the State of Alaska Department of Environmental Conservation on December 31, 1986.

(15) On September 12, 1988, the State of Alaska Department of Environmental Conservation submitted revisions to AAC 18 Chapter 52 (Emission Inspection and Maintenance Requirements for Motor Vehicles). Those sections amended through June 2, 1988, are: 18 AAC 51.010 [Purpose and General Requirements] (a)(3), (b), (d), (e), and (g); 18 AAC 52.020 [Vehicles Subject to this Chapter] (1); 18 AAC 52.070 [Waivers] (5)(A) through (C); and 18 AAC 52.900 [Definitions] (14).

(i) Incorporation by reference.

(A) September 12, 1988 letter from the State of Alaska Department of Environmental Conservation to EPA Region 10.

(B) Chapter 52 [Emissions Inspection and Maintenance Requirements for Motor Vehicles] section 52.010 [Purpose and General Requirements (a)(3), (b), (d), (e), and (g); section 52.020 [Vehicles Subject to This Chapter] (1); section 52.070 [Waivers] (5)(A) through (C); and section 52.900 [Definitions] (14) as adopted by the State of Alaska Department of Environmental Conservation on March 10, 1988.

(16) On September 12, 1988, the State of Alaska Department of Environmental Conservation submitted revisions to the State of Alaska state implementation plan. Specifically pages IV.F.1–1 through IV.F.1–8 of section IV.F "Project Review Procedures" and amendments to title 18, chapter 50, sections 050(a)(4), 050(b), 050(d)(1), 300(a)(5)(C), 300(a)(6)(C), 300(a)(7), 300(c), 300(g), 500(d), 510(a), 520(a), 520(b), and 620 of the Alaska Administrative Code.

(i) Incorporation by reference. (A) September 12, 1988, letter from the State of Alaska Department of Environmental Conservation to EPA Region 10 submitting a revision to the Alaska state implementation plan.

(B) Vol. II, Analysis of Problems, Control Actions, Pages IV.F.1–1 through IV.F.1–8 of section IV.F, "Project Review Procedures," revised June 2, 1988.

(C) Title 18, chapter 50, (Air Quality Control) section 050 (Industrial Processes and Fuel Burning Equipment) (a)(4), 050(b), 050(d)(1), 300 (Permit to Operate) (a)(5)(C), 300(a)(6)(C), 300(a)(7), 300(c), 300(g), 500 (Source Testing) (d), 510 (Ambient Analysis Methods) (a), 520 (Emission and Ambient Monitoring) 520(a), 520(b), and 620 (Air Quality Control Plan) of the Alaska Administrative Code as adopted by the State of Alaska Department of Environmental Conservation on March 10, 1988 and effective on June 2, 1988.

(17) On October 17, 1991, the State of Alaska Department of Environmental Conservation submitted a PM_{10} nonattainment area state implementation plan for Eagle River, Alaska.

(i) Incorporation by reference.

(A) October 15, 1991 letter from Alaska Department of Environmental Conservation to EPA Region 10 submitting the PM_{10} nonattainment area state implementation plan for Eagle River, Alaska.

(B) The PM_{10} nonattainment area state implementation plan for Eagle River, Alaska, as adopted by the Anchorage Assembly on February 6, 1990 and effective on September 24, 1991.

(18) On June 22, 1993, the Governor of the State of Alaska submitted revised rules to satisfy certain Federal Clean

Air Act requirements for an approvable moderate PM_{10} nonattainment area SIP for Mendenhall Valley, Alaska. Also included in this SIP were PM_{10} contingency measures for the Mendenhall Valley. On January 21, 1992, a supplement to the existing Eagle River PM_{10} control plan was submitted by ADEC to EPA and certified on March 8, 1993, by the Lieutenant Governor of Alaska.

(i) Incorporation by reference.

(A) June 22, 1993, letter from the Governor of the State of Alaska to EPA, Region 10, submitting the moderate PM_{10} nonattainment area SIP for Mendenhall Valley, Alaska.

(B) The Control Plan for Mendenhall Valley of Juneau, effective July 8, 1993.

(C) August 25, 1993, letter from ADEC showing, through enclosures, the permanent filing record for the supplement to the existing Eagle River PM_{10} control plan. The Lieutenant Governor certified the supplement on March 8, 1993.

(D) The January 21, 1992, supplement to the existing Eagle River PM_{10} control plan, effective April 7, 1993. Also included is an August 27, 1991 Municipality of Anchorage memorandum listing the 1991 capital improvement project priorities and an October 11, 1991, Muncipality of Anchorage memorandum summarizing the supplement to the existing PM_{10} control plan.

(19) The Environmental Protection Agency (EPA) takes action on and/or approves regulations from three submittals received from the ADEC on July 17, 1990, October 15, 1991 and on March 24, 1994, which pertain to correcting SIP deficiencies in the CFR; amendments to regulations dealing with Air Quality Control, 18 AAC 50, for inclusion into Alaska's SIP; and additional amendments to 18 AAC 50, Air Quality Control, for inclusion into Alaska's SIP to assure compliance with new source review permitting requirements for sources located in nonattainment areas for either carbon monoxide or particulate matter.

(i) Incorporation by reference.

(A) July 17, 1990 letter from ADEC to EPA requesting correction for findings of SIP deficiency in 40 CFR Part 52, and including the version of Alaska Statutes, "Title 46. Water, Air, Energy, and Environmental Conservation," in effect at the time of the July 17, 1990 letter, of which Sections 46.03.020, 46.03.030, 46.03.032, and 46.03.715, amended in 1987, were the most recently amended of the enclosed statutes.

(B) October 15, 1991 letter from ADEC to EPA, and including amendments to regulations and the State Air Quality Control Plan to assure compliance with national ambient air quality standards for particulate matter; the Order Amending Regulations of the Department of Environmental Conservation, effective July 21, 1991; and the following *Alaska Administrative Code, 18 AAC 50, Air Quality Control Regulations:* (50.020; 50.085; 50.100; 50.300; 50.400; 50.510, 50.520, 50.610, and 50.900), effective July 21, 1991, Register 119.

(C) March 24, 1994 letter from Walter J. Hickel, Governor of Alaska, to Chuck Clarke, Regional Administrator of EPA, and including amendments to 18 AAC 50, State Air Quality Control Plan; the Order Adopting and Amending Regulations of the Department of Environmental Conservation, effective April 23, 1994, Register 130; and the amendments to 18 AAC 50 (50.021, 50.300(a)(7) and (a)(8), 50.300 (d), (e), and (g), 50.400(a)(1)(A), 50.400(c)(3)(B)(ii), 50.400(c)(4), 50.400(d)(4), and 50.620), State Air Quality Control Plan, found in Volume III: Appendices, Modifications to Section III.A, effective April 23, 1994, Register 130.

(20) On April 18, 1994, the Commissioner of the Alaska Department of Environmental Conservation (ADEC) submitted "The Alaska Air Quality Small Business Assistance Program State Air Quality Control Plan Amendment," adopted April 8, 1994, as a revision to the Alaska SIP.

(i) Incorporation by reference.

(A) Letter dated April 8, 1994, from the Commissioner of ADEC to the Regional Administrator of EPA, submitting "The Alaska Air Quality Small Business Assistance Program State Air Quality Control Plan Amendment" to EPA; the Alaska Air Quality Small Business Assistance Program State Air Quality Control Plan Amendment (which includes Appendix A the Alaska Statutes Title 46, Chapter 14, Article 3), dated April 1994, and adopted April 8, 1994.

(ii) Additional information.

(A) Letter dated July 24, 1995, from Alaska Department of Environmental Conservation, submitting information necessary for approval of the SBAP revision to EPA; the July 1995 SBAP Update, Responses to EPA Comments, and the Air Quality/Small Business Assistance Compliance Advisory Panel Board Information.

(21) On July 11, 1994 ADEC submitted a SIP revision for a basic motor vehicle inspection and maintenance (I/M) program in the Municipality of Anchorage (MOA) and the Fairbanks North Star Borough (FNSB).

(i) Incorporation by reference.

(A) July 11, 1994 letter from the Governor of Alaska to the Regional Administrator of EPA submitting Alaska's amendments to the Air Quality Control Plan and to 18 AAC 52, Emissions Inspection and Maintenance Requirements for Motor Vehicles; the amendments to 18 AAC 52 (52.005, .015, .020, .030, .035, .040, .045, .050, .055, .060, .065, .070, .075, .080, .085, .090, .095, .100, .105, .400, .405, .410, .415, .420, .425, .430, .440, .445, .500, .505, .510, .515, .520, .525, .527, .530, .535, .540, .545, .550, and .990), effective February 1, 1994; and the State Air Quality Control Plan, Vol. II: Analysis of Problems, Control Actions, Modifications to Section I, June 9, 1994; Vol. II: Analysis of Problems, Control Actions, Modifications to Section I, II, III and V, adopted January 10, 1994; Vol. III: Appendices, Modifications to Section III.A, June 9, 1994; Vol. III: Appendices, Modifications to Section III.B, June 9, 1994; and Vol. III: Appendices, Modifications to Section III.C, June 9, 1994.

(22) On March 24, 1994, ADEC submitted a revision to its SIP for the State of Alaska addressing the attainment and maintenance of the National Ambient Air Quality Standards for carbon monoxide in the Anchorage carbon monoxide nonattainment area.

(i) Incorporation by reference.

(A) March 24, 1994 letter from Alaska Governor Walter Hickel to EPA Regional Administrator Chuck Clarke including as a revision to the SIP the State of Alaska, Department of Environmental Conservation, 18 AAC 53, "Fuel Requirements for Motor Vehicles," (Article 1, 18 AAC 53.005—18 AAC 53.190 and Article 9, 18 AAC 53.990) with amendments adopted through March 19, 1994.

(23) On March 24, 1994, ADEC submitted a SIP revision to EPA to satisfy the requirements of sections 187(a)(2)(A) and 187(a)(3) of the CAA, forecasting and tracking VMT in the Anchorage area.

(i) Incorporation by reference.

(A) March 24, 1994 letter from the Alaska Governor to the EPA Regional Administrator including as a revision to the SIP the VMT requirement in the Anchorage area, contained in ADEC's State Air Quality Control Plan, Volume III: Appendices, Modifications to Section III.B.6, III.B.8, III.B.10 and III.B.11, adopted January 10, 1994; and further description on pages 10–14, 57–60 and 69–75 contained in ADEC's State Air Quality Control Plan, Volume III: Appendices, Modifications to Section III.B, III.B.1, and III.B.3, adopted January 10, 1994.

(24) On December 5, 1994 the Alaska Department of Environmental Conservation sent EPA revisions for inclusion into Alaska's SIP that address transportation and general conformity regulations as required by EPA under the CAA.

(i) Incorporation by reference.

(A) December 5, 1994 letter from the Governor of Alaska to EPA, Region 10, submitting amendments addressing transportation and general conformity revisions to the SIP:

(*1*) Regulations to 18 AAC 50, Air Quality Control, including Article 5, Procedure and Administration, 18 AAC 620; Article 6, Reserved; Article 7, Conformity, 18 AAC 50.700–18 AAC 50.735; Article 8, Reserved; and Article 9, General Provisions, 18 AAC 50.900, all of which contain final edits (23 pages total) by the Alaska Department of Law, were filed by the Lieutenant Governor on December 5, 1994 and effective on January 4, 1995.

(*2*) Amendments to the Alaska State Air Quality Control Plan, "Volume II: Analysis of Problems, Control Actions," as revised on December 1, 1994, adopted by reference in 18 AAC 50.620, containing final edits by the Alaska Department of Law, all of which were certified by the Commissioner of Alaska to be the correct plan amendments,

filed by the Alaska Lieutenant Governor on December 5, 1994 and effective on January 4, 1995.

(25) On March 24, 1994, ADEC submitted a revision to its SIP for the State of Alaska addressing the attainment and maintenance of the NAAQS for CO in the Anchorage CO nonattainment area.

(i) Incorporation by reference.

(A) March 24, 1994 letter from the Alaska Governor to the EPA Regional Administrator including as a revision to the SIP the State of Alaska, Department of Environmental Conservation, 18 AAC 53, "Fuel Requirements for Motor Vehicles," (Article 1, 18 AAC 53.005—18 AAC 53.190 and Article 9, 18 AAC 53.990, with the exception of 18 AAC 53.010(c)(2)), filed March 24, 1994 and effective on April 23, 1994.

(26) Submittal to EPA from the ADEC of CO contingency measure for Fairbanks, AK.

(i) Incorporation by reference.

(A) Letter dated July 12, 1995 from the Commissioner of the ADEC to the EPA Regional Administrator submitting its repair technician and certification program element found in State regulation 18 AAC 52.400–410, effective June 24, 1994.

(27) On October 31, 1997, ADEC submitted revisions to Fuel Requirements for Motor Vehicles, title 18, chapter 53 of the Alaska Administrative Code (18 AAC 53) regarding the use of oxygenated fuels.

(i) Incorporation by reference.

(A) Title 18, Chapter 53, Alaska Administrative Code (AAC), Fuel Requirements for Motor Vehicles, adopted October 31, 1997 (Article 1, 18 AAC 53 .005, .007, .010, .015, .020, .030, .035, .040, .045, .060, .070, .080, .090, .100, .105, .120, .130, .140, .150, .160, .170, .190; Article 9, 18 AAC 53.990).

(28) On January 8, 1997, the Director of the Alaska Department of Environmental Conservation submitted the Alaska air quality regulations, 18 Alaska Administrative Code (AAC) 50 (with the exception of 18 AAC 50.055(a)(9), 50.085, 50.090, 50.110, 50.300(g), and 50.310(l) which were not submitted), as effective on January 18, 1997. On March 17, 1998, the Director of the Alaska Department of Environmental Conservation resubmitted 18 AAC 50.055(a)(3) and (b)(6). EPA has approved the following provisions of 18 AAC 50, as effective on January 18, 1997: Section 005; Section 010, except for subsections (7) and (8); Section 025; Section 030; Section 035; Section 045; Section 050; Section 055, except for paragraph (d)(2)(B) and (a)(9); Section 060; Section 065; Section 070; Section 075; Section 200; Section 201; Section 205; Section 220; Section 240; Section 245; Section 400, paragraphs (a), (b)(1), and (c); Section 420; Section 430; Section 900; and Section 990, subsections (2), (3), (4), (5), (6), (8), (9), (10), (11), (14), (15), (16), (17), (19), (20), (23), (24), (25), (26), (29), (31), (32), (33), (34), (35), (37), (39), (40), (42), (43), (45), (47), (48), (50), (51), (53), (58), (59), (60), (61), (62), (63), (65), (66), (67), (69), (70), (71), (72), (74), (75), (78), (79), (80), (81), (83), (84), (85), (86), (89), (90), (91), (92), (93), (94), (95), (96), (97), (99), and (100). On January 8, 1997, the Director of the Alaska Department of Environmental Conservation submitted the current Alaska Statutes for air pollution control, specifically the 1993 Alaska Act (Chapter 74 State Legislative Act 1993). EPA has approved as federally enforceable provisions of the SIP, the following provisions of the Alaska Statutes, as effective June 25, 1993: AS 46.14.510(b); AS 46.14.550; AS 46.14.560; AS 46.14.990(1), (2), (3), (6), (7), (8), (10), (13), (15), (16), (17), (18), (22), (24), and (25); and AS 45.45.400(a). On January 8, 1997, the Director of the Alaska Department of Conservation submitted the "In Situ Burning Guidelines for Alaska (revised 5/94)."

(i) Incorporation by reference.

(A) 18 AAC 50.005; 18 AAC 50.010, except for subsections (7) and (8); 18 AAC 50.025; 18 AAC 50.030; 18 AAC 50.035; 18 AAC 50.045; 18 AAC 50.050; 18 AAC 50.055, except for paragraphs (d)(2)(B) and (a)(9); 18 AAC 50.060; 18 AAC 50.065; 18 AAC 50.070; 18 AAC 50.075; 18 AAC 50.200; 18 AAC 50.201; 18 AAC 50.205; 18 AAC 50.220; 18 AAC 50.240; 18 AAC 50.245; 18 AAC 50.400, paragraphs (a), (b)(1), and (c); 18 AAC 50.420; 18 AAC 50.430; 18 AAC 50.900; and 18 AAC 50.990, subsections (2), (3), (4), (5), (6), (8), (9), (10), (11), (14), (15), (16), (17), (19), (20), (23), (24), (25), (26), (29), (31), (32), (33), (34), (35), (37), (39), (40), (42), (43), (45), (47), (48), (50), (51), (53), (58), (59), (60), (61), (62), (63), (65), (66), (67), (69), (70), (71), (72), (74),

(75), (78), (79), (80), (81), (83), (84), (85), (86), (89), (90), (91), (92), (93), (94), (95), (96), (97), (99), and (100); as effective on January 18, 1997.

(B) AS 46.14.510(b); AS 46.14.550; AS 46.14.560; AS 46.14.990(1), (2), (3), (6), (7), (8), (10), (13), (15), (16), (17), (18), (22), (24), and (25); and AS 45.45.400(a); as effective on June 25, 1993.

(C) Remove the following provisions of 18 AAC 50, as effective on June 2, 1988, from the current incorporation by reference: 18 AAC 50.010; 18 AAC 50.070; 18 AAC 50.900, subsections (19), (27), (30), (45), (46), and (48).

(29) The Environmental Protection Agency (EPA) approves various amendments to the Alaska State Air Quality Control Plan which are contained in three separate submittals to EPA, dated February 6, 1997, June 1, 1998, and September 10, 1998, and which include the inspection and maintenance program.

(i) Incorporation by reference.

(A) Air Quality Control Regulations, 18 AAC 50.

Effective September 4, 1998: Section 700; Section 705; Section 710 (except for the incorporation by reference of sections 93.102(c), 93.102 (d), 93.104(d), 93.104(e)(2), 93.109(c)-(f), 93.118(e), 93.119(f)(3), 93.120(a)(2), 93.121(a)(1) and (b), and 93.124(b) of 40 CFR); Section 715; and Section 720.

(B) Emissions Inspection and Maintenance Requirements for Motor Vehicles 18 AAC 52.

(1) Effective January 1, 1998: Section 005; Section 010; 015; 020; 025; 035; 037; 050; 060, except for subsections (8)(c), (8)(d)(2) and (8)(e); 065; 070; 080; 085; 095; 100; 105; 400; 405; 415, except subsection (f)(1); 420, except subsection (a)(11); 425; 440; 500; 515; 520, except subsection (c)(9); 525; 527; 530, except subsections (b)(3), (c)(4)(C) and (d)(9); 535; 540; 545; 546; 990.

(2) Effective January 1, 1997: Section 055; 090.

(3) Remove the following provisions of 18 AAC 52, effective January 1, 1997: Section 060, subsection 8 (c) and 8 (e); Section 520, subsection (c)(9).

(4) Remove the following provisions of 18 AAC 52, effective January 1, 1998: Section 060, subsection 8 (d)(2); Section 415, subsection (f)(1); Section 420, subsection (a) (11); Section 530, subsection (b)(3) and (d)(9).

(5) Remove the following provisions of 18 AAC 52, effective January 4, 1995: Section 530, subsection (c) (4)(c).

(C) Fuel Requirements for Motor Vehicles 18 AAC 53.

(1) Effective October 31, 1997: Section 05; 07; 10; 20; 30; 35; 40; 45; 60; 70; 80; 90; 200; 105; 120; 130; 140; 150; 160; 170; 190 and effective September 4, 1998, Section 990.

(2) Remove the following provision of 18 AAC 53.015, Expansion of Control Area, effective October 31, 1997.

(ii) Additional Material.

(A) Revisions to Alaska's State Air Quality Control Plan, Volume II: Section I, "Background," I.A; I.B., I.C., I.D., and I.E., adopted 11/26/96; Part B—Anchorage Contingency Measures, adopted 5/18/98; Section II, "State Air Quality Control Program," pages II–1 through II–4, adopted 5/18/98; Section III.A. "Statewide Carbon Monoxide Control Program," pages III.A.1–1 through III.A.3–4, adopted 5/18/98; III.B. "Anchorage Transportation Control Program," pages III.B.1–1 through III.B.6–7, adopted 5/18/98; III.B.8. "Modeling and Projections," pages III.B.8–1 through III.B.9–2, adopted 5/18/98; III.B.10, "Anchorage Air Pollution Episode Curtailment Plan," pages III.B.10–1 and III.B.10–2, revised 12/19/93; III.B.11. "Assurance of Adequacy," pages III.B.11–1 through III.B.11–3, revised 5/18/98; III.B.12. "Emissions Budget," page III.B.12–1, adopted 11/26/96; and various CO SIP streamlining edits throughout Volume II and Volume III of the State Air Quality Control Plan which make the document easier to read and better organized, adopted 5/18/98.

(30) On November 1, 1999, the Alaska Department of Environmental Conservation (ADEC) submitted a SIP revision to revise the visible emission limit for coal burning boilers, during start-up; shutdown; soot-blowing; grate cleaning; or other routine maintenance activities, that began operation before August 17, 1971, and submitted the required demonstration. This SIP revision is approved for the following facilities that submitted the required demonstration: Golden Valley Electric Association (GVEA), Healy (Unit #1); Eielson Air Force Base, Fairbanks (6

units); Aurora Energy, Fairbanks (4 units); and Clear Air Force Base, Clear (3 units). Additionally, we are approving a revision to the definitions section that will add definitions of grate cleaning and soot-blowing.

(i) Incorporation by reference.

(A) 18 Alaska Administrative Code (AAC) 50.055(a)(9), Industrial Processes and Fuel-Burning Equipment; as State effective on November 4, 1999. 18 AAC 50.990, subsections (106) and (107), Definitions; as State effective on January 1, 2000.

(31) The Environmental Protection Agency (EPA) approves various amendments to the Alaska State Air Quality Control Plan which are contained in two separate submittals to EPA, dated February 24, 2000 and February 2, 2001, and which include the inspection and maintenance and fuels program.

(i) Incorporation by reference.

(A) Air Quality Control Regulations, 18 AAC 50. Effective December 30, 2000: Section 030.

(B) Emissions Inspection and Maintenance Requirements for Motor Vehicles 18 AAC 52.

(*1*) Effective January 1, 2000: Sections 005; 015; 020; 025; 035; 037; 055; 060; 065; 070; 085; 100; 105; 410; 415; 420; 440; 500; 510; 515; 520; 525; 527; 530; 535; and 540.

(*2*) Effective December 30, 2000: Sections 050 and 990.

(C) Fuel Requirements for Motor Vehicles 18 AAC 53. Effective December 30, 2000: Section 080.

(32) On August 30, 2001 the Alaska Department of Environmental Conservation submitted revisions to the Carbon Monoxide State Implementation Plan for Fairbanks, Alaska.

(i) Incorporation by reference.

(A) Air Quality Control Regulations, 18 AAC 50.030, as adopted 7/27/01, effective 9/21/01.

(B) Assembly Ordinance 2001–17 mandating a Fairbanks North Star Borough motor vehicle plug-in program, as adopted 4/12/2001, effective 4/13/01.

(ii) Additional Material.

Volume II, Section III.C of the State Air Quality Control Plan adopted 7/27/01, effective 9/21/01; Volume III.C3, III.C.5, C.11, and C.12 of the Appendices; adopted 7/27/01, effective 9/21/01.

[37 FR 10848, May 31, 1972]

EDITORIAL NOTE: For FEDERAL REGISTER citations affecting §52.70, see the List of CFR Sections Affected, which appears in the Finding Aids section of the printed volume and on GPO Access.

EFFECTIVE DATE NOTE: At 69 FR 34936, June 23, 2004, §52.70 was amended by adding paragraph (c)(34) effective July 23, 2004. For the convenience of the user, the added text is set forth as follows:

§52.70 Identification of plan.

* * * * *

(c) * * *

(34) On February 18, 2004, the Alaska Department of Environmental Quality submitted a CO maintenance plan and requested the redesignation of Anchorage to attainment for CO. The State's maintenance plan, attainment year emissions inventory, and the redesignation request meet the requirements of the Clean Air Act.

(i) Incorporation by reference.

(A) 18AAC50.010, Ambient air quality standards, as effective June 21, 1998, except for subsections (7) and (8).

(B) 18AAC50.015, Air quality designations, classifications, and control regions, as in effect February 20, 2004.

(C) 18AAC53.010, Control periods and control areas, as in effect February 20, 2004.

(D) 18AAC53.190, Suspension and reestablishment of control period, as in effect February 20, 2004.

(E) 18AAC50.021, of the State Air Quality Control Plan, as referenced in (c)(19)(i)(C) of this section, effective April 23, 1994, is removed.

§52.71 Classification of regions.

The Alaska plan was evaluated on the basis of the following classifications:

Air quality control Region	Pollutant				
	Particulate matter	Sulfur oxides	Nitrogen dioxide	Carbon monoxide	Ozone
Cook Inlet Intrastate	I	III	III	I	III.

Air quality control Region	Pollutant				
	Particulate matter	Sulfur oxides	Nitrogen dioxide	Carbon monoxide	Ozone
Northern Alaska Intrastate	I	III	III	I	III.
South Central Alaska Intrastate	III	III	III	III	III.
Southeastern Alaska Intrastate	III	III	III	III	III.

[37 FR 10848, May 31, 1972, as amended at 48 FR 30625, July 5, 1983]

§ 52.72 Approval status.

With the exceptions set forth in this subpart, the Administrator approves Alaska's plan for the attainment and maintenance of the national standards. The State included in the plan a regulation prohibiting idling of unattended motor vehicles. However, the plan stated that this regulation was included for informational purposes only, and was not to be considered part of the control strategy to implement the national standards for carbon monoxide. Accordingly, this regulation is not considered a partof the applicable plan.

[37 FR 15080, July 27, 1972]

§ 52.73 Approval of plans.

(a) Carbon monoxide.

(1) Anchorage.

(i) EPA approves as a revision to the Alaska State Implementation Plan, the Anchorage Carbon Monoxide Attainment Plan (Volume II, Section III.B of the State Air Quality Control Plan adopted December 20, 2001, effective January 27, 2002 and Volume III.B.3, III B.10 and III.B11, III B.12 of the Appendices adopted December 20, 2001, effective January 27, 2002) submitted by the Alaska Department of Environmental Conservation on January 4, 2002.

(ii) [Reserved]

(2) Fairbanks. [Reserved]

(b) *Lead.* [Reserved]

(c) *Nitrogen dioxide.* [Reserved]

(d) *Ozone.* [Reserved]

(e) *Particulate matter.* [Reserved]

(f) *Sulfur dioxide.* [Reserved]

[67 FR 58712, Sept. 18, 2002]

EFFECTIVE DATE NOTE: At 69 FR 24936, June 23, 2004, § 52.73 was amended by revising paragraph (a)(1)(i) effective July 23, 2004. For the convenience of the user, the revised text is set forth as follows:

§ 52.73 Approval of plans.

(a) * * *

(1) * * *

(i) EPA approves as a revision to the Alaska State Implementation Plan, the Anchorage Carbon Monoxide Maintenance Plan (Volume II Section III.B of the State Air Quality Control Plan, adopted January 2, 2004, effective February 20, 2004 and Volume III of the Appendices adopted January 2, 2004, effective February 20, 2004) submitted by the Alaska Department of Environmental Conservation on February 18, 2004.

§ 52.74 [Reserved]

§ 52.75 Contents of the approved state-submitted implementation plan.

The following sections of the State Air Quality Control Plan (as amended on the dates indicated) have been approved and are part of the current State Implementation Plan:

VOLUME II: ANALYSIS OF PROBLEMS, CONTROL ACTION

Section I *Background*

A. Introduction (7/1/82)
B. Air Quality Control Regions (7/1/82)
C. Attainment/ Nonattainment Designations (7/1/83)

Section II *State Air Quality Control Program* (11/1/83)

Section III *Areawide Pollutant Control Program*

A. Statewide Transportation Control Program (6/1/85)
B. Anchorage Transportation Control Program (6/1/85), except B.10.1 through 10.6 Anchorage Air Pollution Curtailment Actions (6/26/87)
C. Fairbanks Transportation Control Program (6/1/85), except C.10.1 through 10.9 Fairbanks Emergency Episode Prevention Plan (6/26/87)
D. Total Suspended Particulate Matter (7/1/82)
E. Ice Fog (7/1/82)
F. Open Burning (10/30/83)
G. Wood Smoke Pollution Control (7/1/83)

H. Lead Pollution Control (7/1/83)

Section IV *Point Source Control Program*

A. Summary (10/30/83)
1. Annual Review Report (10/30/83)
B. State Air Quality Regulations (10/30/83)
C. Local Programs (10/30/83)
D. Description of Source Categories And Pollutants
1. Typical Point Sources (10/30/83)
2. Summary of Major Emitting Facilities (10/30/83)
E. Point Source Control 1. Introduction (10/30/83)
F. Facility Review Procedures
1. Project Review Procedures (6/02/88) Who needs a permit? (10/30/83, 6/02/88)
2. Standard Application Procedures (10/30/83)
3. PSD Application Procedures (10/30/83)
Preliminary report and meeting (10/30/83)
Pre-construction monitoring (10/30/83) PSD application format (10/30/83)
4. Nonattainment Application Procedures (10/30/83)
G. Application Review and Permit Development (10/30/83)
1. Application Review (10/30/83)
2. Permit Development Requirements (10/30/83)
Monitoring and Testing Requirements (10/30/83)
Ambient Monitoring (10/30/83)
Continuous Emissions Monitoring (10/30/83)
Source Testing (10/30/83)
3. Prevention of Significant Deterioration Review (10/30/83)
Basis of Program (10/30/83)
PSD Regulations (10/30/83)
PSD Analysis (10/30/83)
4. Nonattainment Area Review (10/30/83)
5. New Source Performance Standards Source Review (10/30/83)
6. Visibility Review (10/30/83)
7. Sources under EPA Review (10/30/83)
H. Permit Issuance Requirements (10/30/83)

Section V *Ambient Air Monitoring*

A. Purpose (7/1/82)
B. Completed Air Monitoring Projects (7/1/82)
1. Carbon Monoxide (7/1/82)
2. Nitrogen Oxides (7/1/82)
3. Sulfur Dioxide (7/1/82)
4. Ozone (7/1/82)
5. Total Suspended Particulates (TSP) (7/1/82)
6. Lead (7/1/82)
C. Air Monitoring Network (7/1/82)
1. Network Description (7/1/82)
2. Station Designations (7/1/82)
3. Air Quality Monitoring Procedures (7/1/82)
4. Ambient Sampling for Specific Pollutants (7/1/82)
E. Annual Review (7/1/82)

VOLUME III. APPENDICES

Section II *State Air Quality Control Program*

II.A. State Air Statues, except Section 46.03.170 (11/15/83)
State Attorney General Opinions on Legal Authority—(2/29/72, 2/29/80)
Title 18—Environmental Conservation, Chapter 50—Air Quality Control (10/30/83), (6/7/87), (6/2/88)
Title 18—Environmental Conservation, Chapter 52—Emissions Inspections and Maintenance Requirements for Motor Vehicles (5/19/85), except
18 AAC 52.010 (3), (3b), (3d), (3e), and (3g) (5/19/85)
18 AAC 52.020 (1) (5/19/85)
18 AAC 52.070 (5) (A)–(C) (5/19/85)
18 AAC 52.900 (14) (5/19/85)
II.B. Municipality of Anchorage/Cook Inlet ADEC Agreements (11/15/83)
II.C. Fairbanks North Star Borough Ordinances, except Section 8.04.070/FNSB & ADEC Agreements (11/15/83)

Section III *Areawide Pollutant Control Program*

III.B.3–a Anchorage Graphs of Highest and Second Highest CO readings for Each Site (11/15/83)
III.B.5–a Anchorage Traffic Improvements (11/15/83)
III.B.5–b Anchorage Contingency Plan (11/15/83)
III.B.5–c Anchorage Transit Ridership (11/15/83)
III.B.8–a Anchorage Graphs of Projected CO Concentrations for Each Site (11/15/83)
III.G Ordinance of the City and Borough of Juneau (10/6/83)
III.H Support Documents for Lead Plan (11/15/83)

Section IV *Point Source Control Program*

IV.1 PSD Area Classification and Reclassifications (11/15/83)
A. Class I Area Boundaries (11/15/83)
B. Areas Protected from Visibility Degradation (11/15/83)
C. Reclassification (11/15/83)
1. Limitations on PSD Reclassification (11/15/83)
2. PSD Reclassification Procedures (11/15/83)
IV.2 Compliance Assurance (11/15/83)
IV.3 Testing Procedures (11/15/83)

Section V *Ambient Air Monitoring*

ADEC Ambient Analysis Procedures (11/15/83)

[56 FR 19287, Apr. 26, 1991]

§52.76 1990 Base Year Emission Inventory.

(a) EPA approves as a revision to the Alaska State Implementation Plan the

1990 Base Year Carbon Monoxide Emission Inventory for the Anchorage and Fairbanks areas designated as nonattainment for CO, submitted by the Alaska Department of Environmental Conservation on December 29, 1993. This submittal consists of the 1990 base year stationary, area, non-road mobile, and on-road mobile sources for the pollutant carbon monoxide.

(b) EPA approves a revision to the Alaska State Implementation Plan, submitted on December 5, 1994, of the on-road mobile source portion of the 1990 Base Year Emission Inventory for Carbon Monoxide in Anchorage and Fairbanks.

[62 FR 6132, Feb. 11, 1997, as amended at 63 FR 50764, Sept. 23, 1998]

§§ 52.77–52.81 [Reserved]

§ 52.82 Extensions.

The Administrator, by authority delegated under section 186(a)(4) of the Clean Air Act, as amended in 1990, hereby extends for one year (until December 31, 1996) the attainment date for the MOA, Alaska CO nonattainment area.

[61 FR 33678, June 28, 1996]

§§ 52.83–52.95 [Reserved]

§ 52.96 Significant deterioration of air quality.

(a) The State of Alaska Department of Environmental Conservation Air Quality Control Regulations as in effect on June 2, 1988 (specifically 18 AAC 50.020, 50.021, 50.300, 50.400, 50.510, 50.520, 50.530, 50.600, 50.620, and 50.900) and the State air quality control plan as in effect on June 2, 1988 (specifically, Section I.B. AIR QUALITY CONTROL REGIONS, Section I.C. ATTAINMENT/NONATTAINMENT DESIGNATIONS, Section I.D. PREVENTION OF SIGNIFICANT DETERIORATION DESIGNATIONS, Section IV.F. FACILITY REVIEW PROCEDURES, Section IV.G APPLICATION REVIEW AND PERMIT DEVELOPMENT, Section IV.H PERMIT ISSUANCE REQUIREMENTS, Appendix IV.1. PSD area Classification and Reclassification, and Appendix V ADEC Ambient Analysis Procedures), are approved as meeting the requirements of part C for preventing significant deterioration of air quality.

(b) The requirements of sections 160 through 165 of the Clean Air Act are not met for Indian reservations since the plan does not include approvable procedures for preventing the significant deterioration of air quality on Indian reservations and, therefore, the provisions of § 52.21 except paragraph (a)(1) are hereby incorporated and made part of the applicable reservation in the State of Alaska.

[48 FR 30626, July 5, 1983, as amended at 56 FR 19288, Apr. 26, 1991; 68 FR 11321, Mar. 10, 2003; 68 FR 74488, Dec. 24, 2003]

Subpart D—Arizona

§ 52.111 Toll free number assignment.

Toll free numbers shall be made available on a first-come, first-served basis unless otherwise directed by the Commission.

[63 FR 16441, Apr. 3, 1998]

§ 52.120 Identification of plan.

(a) Title of plan: "The State of Arizona Air Pollution Control Implementation Plan."

(b) The plan was officially submitted on January 28, 1972.

(c) The plan revisions listed below were submitted on the dates specified.

(1) Letter of intent to revise plan submitted on March 1, 1972, by the Arizona State Board of Health.

(2) Letter of intent to revise plan submitted on March 2, 1972, by the Governor.

(3) Revised implementation plan submitted on May 30, 1972, by the Governor.

(i) Maricopa County Bureau of Air Pollution Control.

(A) Previously approved on July 27, 1972 and now deleted without replacement Rules 60 to 67.

(4) Transportation control plan submitted on April 11, 1973, by the Governor.

(5) Amendments (Non-regulatory) to the transportation control plan submitted on May 10, 1973, by the Governor.

(6) Arizona Air Pollution Control Regulations (numbers in parentheses indicate recodification of regulations

as identified in the Arizona State Implementation Plan Semi-Annual Report submitted to EPA on September 4, 1975).

7–1–1.1 (R9–3–101) (Policy and Legal Authority)
7–1–1.3 (R9–3–103) (Air Pollution Prohibited)
7–1–1.5 (R9–3–105) (Enforcement)
7–1–4.3 (R9–3–403) (Sulfur Emissions: Sulfite Pulp Mills)
7–1–4.4 (R9–3–404) (Sulphur Emissions: Sulfuric Acid Plants)
7–1–4.5 (R9–3–405) (Sulphur Emissions: Other Industries)
7–1–5.1 (R9–3–501) (Storage of Volatile Organic Compounds)
7–1–5.2 (R9–3–502) (Loading of Volatile Organic Compounds)
7–1–5.3 (R9–3–503) (Organic Compound Emissions: Pumps and Compressors)
7–1–5.4 (R9–3–504) (Organic Solvents)
7–1–6.1 (R9–3–601) (Carbon Monoxide Emissions: Industrial)
7–1–7.1 (R9–3–701) (Nitrogen Oxide Emissions: Fuel Burning Installations)
7–1–7.2 (R9–3–702) (Nitrogen Oxide Emissions: Nitric Acid Plants
7–1–8.3 (R9–3–803) (New Installations)

Submitted on August 20, 1973.

(7) Revised transportation control plan submitted on September 11, 1973, by the Governor.

(8) Letter supplementing the revised transportation control plan encouraging mass transit, carpooling, etc., submitted on September 21, 1973, by the Governor.

(9) Letter supplementing the revised transportation control plan encouraging mass transit, carpooling, etc., submitted on October 2, 1973, by the Governor.

(10) Maricopa County Air Pollution Control District Regulation III, Rule 31 (Particulate Matter Emissions) submitted on January 28, 1974.

(11) Arizona Air Pollution Control Regulation 7–1–1.7 (R9–3–107) (Unlawful open burning) submitted on February 19, 1974.

(12) Pima County Air Pollution Control District Regulation II, Rule 2 (Particulate matter emissions) submitted on March 19, 1974.

(13) Air quality maintenance area designation analysis submitted on April 17, 1974, by the Arizona Department of Health Services.

(14) Arizona Air Pollution Control Regulations:

7–1–2.10 (R9–3–210) (Emergency Episode Criteria)
7–1–4.2 (R9–3–402) (Sulfur Emissions: Fuel Burning Installations)

Submitted on August 30, 1974.

(15) Arizona Air Pollution Control regulations 7–1–8.1 (R9–3–801) (Original State jurisdiction); 7–1–8.2 (R9–3–802) (Assertions of jurisdiction); 7–1–8.3 (R9–3–803) (Delegation of authority); 7–1–11.3 (R9–3–1203) (Suspension and revocation of permits); 7–1–11.4 (R9–3–1204) (Permits non-transferable); 7–1–11.5 (R9–3–1205) (Posting of permits); 7–1–11.6 (R9–3–1206) (Notice by permit agencies); 7–1–11.7 (R9–3–1207) (Equipment covered); 7–1–11.9 (R9–3–1209) (Permit Fees); and 7–1–1.4 (R9–3–104) (Recordkeeping and reporting) submitted September 27, 1974.

(16) Assertion of State Jurisdiction over Apache, Navajo, Santa Cruz and Yavapai Counties; Assertion of State Jurisdiction over Cochise County; and Assertion of State Jurisdiction over specific sources in Mohave County.

Submitted on February 3, 1975.

(17) Amendments to the Rules and Regulations of the Pima County Air Pollution Control District (Regulation I: Rules 2, 4D, 4E, 4J, 8G, 16C, 29, and 30) submitted on February 20, 1975, by the Director, Arizona Department of Health Services (the Governor's official representative).

(18) Air pollution control regulations for various counties submitted by the Governor on July 1, 1975, as follows:

(i) Coconino County Air Pollution Control Regulations.

12–1–1 (Legal Authority)
12–1–2 (Definitions)
12–1–3 (Air Pollution Prohibited)
12–2–2 (Operating Permits)
12–2–4 (Permit Fees)
12–2–5 (Permit Renewals)
12–2–7 (Testing of Installations)
12–2–8 (Compliance with Terms of Installation Permit)
12–2–9 (Notification of Denial of Permit)
12–2–10 (Appeals to the Hearing Board)
12–2–11 (Permits Not Transferable)
12–2–12 (Expiration of Installation Permit)
12–2–13 (Posting of Permits)
12–3–1 (Ambient Air Quality Standards)
12–3–2 (Emission Standards)
12–3–3 (Reporting of Emissions)
12–3–4 (Production of Records: Confidentiality)
12–3–5 (Monitoring Devices)
12–3–6 (Penalty for Violation)

12–4–1 (Shade, Density, or Opacity of Emissions)
12–4–2 (Dust Control)
12–4–3 (Processing of Animal or Vegetable Matter)
12–4–4 (Volatile and Odorous Materials)
12–4–5 (Storage and Handling of Petroleum Products)
12–5–1 (Permit Required)
12–5–2 (Performance Tests: Permit Tags)
12–5–3 (Emission Limitations)
12–5–4 (Authority of Other Public Agencies)
12–6–1 (Unlawful Open Burning)
12–6–2 (Exceptions Requiring no Permission)
12–6–3 (Exceptions Requiring Permission)
12–6–4 (Exceptions Under Special Circumstances)
12–7–1 (Misdemeanor: Penalty)
12–7–2 (Order of Abatement)
12–7–3 (Hearings on Orders of Abatement)
12–7–5 (Notice of Hearing; Publication; Service)
12–7–6 (Injunctive Relief)

(A) Previously approved on November 15, 1978 and now deleted without replacement Rules 12–7–2, 12–7–3, 12–7–5, and 12–7–6.

(B) Previously approved on November 15, 1978 in paragraph (i) of this section and now deleted without replacement Rules 12–1–1 through 12–1–3, 12–2–2, 12–2–4, 12–2–5, 12–2–7 through 12–2–13, 12–3–1, 12–3–3 through 12–3–6, 12–4–1 through 12–4–5, 12–5–1 through 12–5–4, 12–6–1 through 12–6–4, and 12–7–1.

(ii) Mohave County Air Pollution Control Regulations.

Sec. 1, Reg. 1 (Policy and Legal Authority)
Sec. 1, Reg. 2 (Definitions)
Sec. 1, Reg. 3 (Air Pollution Prohibited)
Sec. 1, Reg. 4 (Enforcement)
Sec. 2, Reg. 1 (Shade, Density or Opacity of Emissions)
Sec. 2, Reg. 2 (Particulate Matter)
Sec. 2, Reg. 3 (Reduction of Animal or Vegetable Matter)
Sec. 2, Reg. 4 (Evaporation and Leakage)
Sec. 2, Reg. 5 (Storage Tanks)
Sec. 3, Reg. 1 (Particulate Matter from Fuel Burning Installations)
Sec. 3, Reg. 2 (Particulate Matter from Other Sources)
Sec. 3, Reg. 3 (Sulfur from Primary Copper Smelters)
Sec. 3, Reg. 4 (Ground Level Concentrations)
Sec. 3, Reg. 5 (Exceptions)
Sec. 3, Reg. 6 (Incinerators)
Sec. 4, Reg. 1 and Reg. 2 (Responsibility and Requirements of Testing)
Sec. 5, Reg. 1 (Open Fires: Prohibition and Exceptions)
Sec. 6, Reg. 1 (Sulfur Dioxide)
Sec. 6, Reg. 2 (Non-Specific Particulate)
Sec. 6, Reg. 3 (Evaluation)
Sec. 6, Reg. 4 (Anti-Degradation)
Sec. 7 (Violations)

(A) Previously approved on November 15, 1978 in paragraph (ii) of this section and now deleted without replacement Rules 1–1 through 1–4, 2–1 through 2–5, 3–1, 3–2, 3–6, 4–1, 4–2, 5–1, 6–1 through 6–4, and 7.

(iii) Yuma County Air Pollution Control Regulations.

8–1–1.1 (Policy and Legal Authority)
8–1–1.2 (Definitions)
8–1–1.3 (Air Pollution Prohibited)
8–1–1.4 (Recordkeeping and Reporting)
8–1–1.5 (Enforcement)
8–1–1.6 (Exceptions)
8–1–2.1 (Non-Specific Particulate)
8–1–2.2 (Sulfur Dioxide)
8–1–2.3 (Non-Methane Hydrocarbons)
8–1–2.4 (Photochemical Oxidants)
8–1–2.5 (Carbon Monoxide)
8–1–2.6 (Nitrogen Dioxide)
8–1–2.7 (Evaluation)
8–1–2.10 (Emergency Episode Criteria)
8–1–3.1 (Visible Emissions; General)
8–1–3.2 (Fugitive Dust)
8–1–3.3 (Particulates—Incineration)
8–1–3.4 (Particulates—Wood Waste Burners)
8–1–3.5 (Particulates—Fuel Burning Equipment)
8–1–3.6 (Particulates—Process Industries)
8–1–4.2 (Fuel Burning Installations)
8–1–4.3 (Sulfur Emissions—Sulfite Pulp Mills)
8–1–4.4 (Sulfur Emissions—Sulfuric Acid Plants)
8–1–4.5 (Sulfur Emissions—Other Industries)
8–1–5.1 (Storage of Volatile Organic Compounds)
8–1–5.2 (Loading of Volatile Organic Compounds)
8–1–5.3 (Pumps and Compressors)
8–1–5.4 (Organic Solvents; Other Volatile Compounds)
8–1–6.1 (CO_2 Emissions—Industrial)
8–1–7.1 (NO_2 Emissions—Fuel Burning Equipment)
8–1–7.2 (NO_2 Emissions—Nitric Acid Plants)
8–1–8.1 (Open Burning—Prohibition)
8–1–8.2 (Open Burning—Exceptions)

(A) Previously approved on November 15, 1978 in paragraph (iii) of this section and now deleted without replacement Rules 8–1–1.1, 8–1–2.7, 8–1–2.10, 8–1–4.2 through 8–1–4.5, 8–1–5.1 through 8–1–5.4, 8–1–6.1, 8–1–7.1, 8–1–7.2, 8–1–8.1, and 8–1–8.2.

(iv) Pinal-Gila Counties Air Pollution Control Regulations.

7–1–1.1 (Policy and Legal Authority)

7–1–1.2 (Definitions)
7–1–1.3 (Air Pollution Prohibited)
7–1–2.2 (Permit Unit Description and Fees)
7–1–2.4 (Appeals to Hearing Board)
7–1–2.5 (Transfer: Posting: Expirations)
7–1–2.6 (Recordkeeping and Reporting)
7–1–2.7 (Enforcement)
7–1–2.8 (Exceptions)
7–1–4.1 and 7–1–4.2 (Orders of Abatement)
7–1–5.1 (Classification and Reporting: Production of Records: Violation: and Penalty)
7–1–5.2 (Special Inspection Warrant)
7–1–5.3 (Decisions of Hearing Boards: Subpoenas)
7–1–5.4 (Judicial Review: Grounds: Procedures)
7–1–5.5 (Notice of Hearing: Publication: Service)
7–1–5.6 (Injunctive Relief)
7–2–1.1 (Non-Specific Particulate)
7–2–1.2 (Sulfur Dioxide)
7–2–1.3 (Non-Methane Hydrocarbons)
7–2–1.4 (Photochemical Oxidants)
7–2–1.5 (Carbon Monoxide)
7–2–1.6 (Nitrogen Dioxide)
7–2–1.7 (Evalution)
7–2–1.8 (Anti-Degradation)
7–3–1.1 (Visible Emissions: General)
7–3–1.2 (Particulate Emissions—Fugitive Dust)
7–3–1.3 (Open Burning)
7–3–1.4 (Particulate Emissions—Incineration)
7–3–1.5 (Particulate Emissions—Wood-Waste Burners)
7–3–1.6 (Reduction of Animal or Vegetable Matter)
7–3–1.7 (Particulate Emissions—Fuel Burning Equipment)
7–3–1.8 (Particulate Emissions—Process Industries)
7–3–2.1 (Copper Smelters)
7–3–2.2 (SO_2 Emissions—Fuel Burning Installations)
7–3–2.3 (SO_2 Emissions—Sulfite Pulp Mills)
7–3–2.4 (SO_2 Emissions—Sulfuric Acid Plants)
7–3–2.5 (Other Industries)
7–3–3.1 (Storage of Volatile Organic Compounds)
7–3–3.2 (Loading of Volatile Organic Compounds)
7–3–3.3 (Pumps and Compressors)
7–3–3.4 (Organic Solvents: Other Volatile Compounds)
7–3–4.1 (CO_2 Emissions—Industrial)
7–3–5.1 (NO_2 Emissions—Fuel Burning Equipment)
7–3–5.2 (NO_2 Emissions—Nitric Acid Plants)
7–3–6.1 (Policy and Legal Authority)

(A) Previously approved on November 15, 1978 and now deleted without replacement Rules 7–1–4.1 to 7–1–4.2 and 7–1–5.1 to 7–1–5.6.

(B) Previously approved on November 15, 1978 and now deleted without replacement Rules 7–1–2.2, 7–1–2.4, 7–1–2.7, 7–2–1.3, and 7–3–6.1.

(C) Previously approved on December 17, 1979 and now deleted without replacement Rule 7–3–2.5.

(D) Previously approved on November 15, 1978 in paragraph (c)(18)(iv) of this section and now deleted without replacement Rules 7–1–1.1, 7–1–1.3, 7–1–2.5, 7–1–2.6, 7–2–1.1, 7–2–1.2, 7–2–1.4, 7–2–1.5, 7–2–1.6, 7–2–1.7, and 7–3–1.6.

(E) Previously approved on December 17, 1979 in paragraph (c)(18)(iv) of this section and now deleted without replacement Rule 7–2–1.8.

(F) Previously approved on November 15, 1978 in paragraph (c)(18)(iv) of this section and now deleted without replacement with respect to Gila County only Rules 7–3–1.2, 7–3–1.3, 7–3–1.4, 7–3–1.5, 7–3–1.7, 7–3–1.8, 7–3–2.2, 7–3–2.3, 7–3–2.4, 7–3–3.1, 7–3–3.2, 7–3–3.3, 7–3–4.1, 7–3–5.1, and 7–3–5.2.

(G) Previously approved on December 17, 1979 in paragraph (c)(18)(iv) of this section and now deleted without replacement with respect to Gila County only Rule 7–3–2.5.

(19) Arizona Air Pollution Control Regulations:

R9–3–102 (Definitions)
R9–3–108 (Test Methods and Procedures)
R9–3–301 (Visible Emissions—General)
R9–3–302 (Particulate Emissions: Fugutive Dust)
R9–3–303 (Particulate Emissions: Incineration)
R9–3–304 (Particulate Emissions: Wood Waste Burners)
R9–3–305 (Particulate Emissions: Fuel Burning Equipment)
R9–3–307 (Particulate Emissions: Portland Cement Plants)
R9–3–308 (Particulate Emissions: Heater-Planers)

Submitted on September 16, 1975.

(20) Arizona Air Pollution Control Regulations R9–3–505 (Gasoline Volatility Testing); R9–3–506 (Gasoline Volatility Standards); R9–3–1001 (Policy and Legal Authority); R9–3–1020 (State Stations Acting as Fleet Inspection Stations); any Fleet Inspection Stations for State Stations); submitted on January 23, 1976.

(21) Amendments to the rules and Regulations of the Pima County Air Pollution Control District (Regulation I:

Rule 2 (paragraph uu-yy, Definitions); regulation II (Fuel Burning Equipment): Rule 2G (paragraphs 1–4c, Particulate Emissions), Rule 7A (paragraphs 1–6, Sulfur Dioxide Emissions), Rule 7B (paragraphs 1–4, Nitrogen Oxide Emission); Regulation VI: Rule 1A–H, (Ambient Air Quality Standards); Regulation VII (paragraph A–D, Standards of Performance for New Stationary Sources); and Regulation VIII (paragraphs A–C, Emission Standards for Hazardous Air Pollutants)) submitted on September 30, 1976 by the Director, Arizona Department of Health Services (the Governor's official representative).

(22)–(23) [Reserved]

(24) Arizona Air Pollution Control Regulations R9–3–1002 (Definitions); R9–3–1003 (Vehicles To Be Inspected by the Mandatory Vehicular Emissions Inspection Program); R9–3–1004 (State Inspection Requirements); R9–3–1005 (Time of Inspections); R9–3–1006 (Mandatory Vehicular Emissions Inspection); R9–3–1007 (Evidence of Meeting State Inspection Requirements); R9–3–1008 (Procedure for Issuing Certificates of Waiver); R9–3–1010 (Low Emissions Tune Up); R9–3–1011 (Inspection Report); R9–3–1012 (Inspection Procedure and Fee); R9–3–1013 (Reinspections); R9–3–1016 (Licensing of Inspectors); R9–3–1017 (Inspection of Governmental Vehicles); R9–3–1018 (Certificate of Inspection); R9–3–1019 (Fleet Station Procedures and Permits); R9–3–1022 (Procedure for Waiving Inspections Due to Technical Difficulties); R9–3–1023 (Certificate of Exemption); R9–3–1025 (Inspection of State Stations); R9–3–1026 (Inspection of Fleet Stations); R9–3–1027 (Registration of Repair Industry Analyzers); R9–3–1029 (Vehicle Emission Control Devices); and R9–3–1030 (Visible Emissions; Diesel-Powered Locomotives); submitted on February 11, 1977.

(25) [Reserved]

(26) Maricopa County Air Pollution Control District Regulation IV, rule 41, paragraph B (Continuously Monitoring and Recording Emissions) submitted on July 29, 1977.

(27) The following amendments to the plan were submitted on January 4, 1979 by the Governor's designee.

(i) Arizona State Rules and Regulations for Air Pollution Control.

(A) R–9–3–101, A., Nos. 2, 3, 29, 41, 53, 55, 87, 88, 89, 91, 92, 95, 100 and 117; R9–3–301, paragraphs D, J, and N; R9–3–306, paragraphs D and J; and R9–3–307, paragraphs C and E.

(B) New or amended Rules R9–3–101 (Nos. 1, 4, 6, (a, c, and d), 8, 9, 11, 13, 17 to 26, 28, 30 to 35, 37 to 40, 43 to 45, 48, 49, 54, 57 to 59, 61 to 73, 77 to 80, 82, 83, 86, 90, 94, 96, 98, 101, 102, 104, 105, 107 to 115, 118 to 120, 122, to 129, and 131), R9–3–217, R9–3–218, R9–3–219, R9–3–308, R9–3–310 (Paragraph C), R9–3–311 (Paragraph A), R9–3–312, R9–3–313 (Paragraphs A.1, A.2.b, A.3, A.4, B to D.1, D.3, D.4.a to F.1.2.iii, F.1.b., and F.2.b. to F.4), R9–3–314 to R9–3–319, R9–3–402 to R9–3–404, R9–3–406, R9–3–407, R9–3–409, R9–3–410, R9–3–502 (Paragraphs B, C, C.2, and D to G), R9–3–503 (Paragraph A), R9–3–504 (Paragraphs B and C), R9–3–505 (Paragraphs A, B.1.b., B.2.b, and B.3 to D), R9–3–506 (Paragraphs A.2, B, C.1.a to C.4), R9–3–507 (Paragraphs D to F), R9–3–508 (Paragraphs A and C), R9–3–510 (Paragraphs B to E), R9–3–511 (Paragraph B), R9–3–512 (Paragraph B), R9–3–513 (Paragraphs B and C), R9–3–514 (Paragraphs B and C), R9–3–516 (Paragraph B), R9–3–517 (Paragraphs B and C), R9–3–518 (Paragraphs B and C), R9–3–519 (Paragraphs A.2, A.3.a to A.3.c, A.3.e and B to C), R9–3–520 (Paragraphs B and C), R9–3–521 (Paragraphs B to D), R9–3–522 (Paragraphs A.1 to A.5, B and C), R9–3–523 (Paragraph B), R9–3–524 (Paragraphs C, D.1, D.2, D.4 to G.5), R9–3–525 (Paragraphs B to D), R9–3–526, R9–3–527, R9–3–528 (Paragraphs B to E and F.1 to F.4), R9–3–601 to R9–3–605, R9–3–1101, R9–3–1102, Appendix 10 (Sections A10.1.3.3, A10.1.4. and A10.2.2 to A10.3.4.) and Appendix 11.

(28) The following amendments to the plan were submitted on January 18, 1979 by the Governor's designee.

(i) Maricopa County Bureau of Air Pollution Control Rules and Regulations.

(A) Rule 33, Storage and Handling of Petroleum Products.

(B) New or amended Rules 21G and 41.

(29) The following amendments to the plan were submitted on January 23, 1979, by the Governor's designee.

(i) Arizona State Rules and Regulations for Air Pollution Control.

(A) Arizona Testing Manual for Air Pollutant Emissions (excluding Sections 2.0 and 5.0).

(30) Redesignation of AQCR's in Arizona, submitted on January 26, 1979, by the Governor.

(31) Revisions to the Arizona Air Pollution Control Regulations submitted on March 21, 1979:

R9–3–1002 (22,34); R9–3–1003 [A(A8–11),B,C]; R9–3–1005 [A, (A3)]; R9–3–1006 [A,(A1,2),B, (B2,3,4,5),D,E, (E1(c),2(c)),F,G, (G1,2), Table II]; R9–3–1008 [B,(B1,2,6,7)]; R9–3–1010 [A,(A3),C,D,F]; R9–3–1011 [A,B,(B1,2,3)];R9–3–1012(b); R9–3–1014; R9–3–1017 [B,(B4), C, E]; R9–3–1019 [A,B,D, D(1)(a)(i), D(1)(a)(ii)(6), D(1)(a)(iii), D(1)(c), D(1)(f)(11), H, (H1,2), I(I8,9,10,11,12,13), J, (J10), L, M, N, (N1,2)]; R9–3–(C,E); R9–3–1022(B); R9–3c–091023(A,B); R9–3–1027(F).

(32) The following amendments to the plan were submitted on February 23, 1979 by the Governor's designee.

(i) Nonatainment Area Plan for Carbon Monoxide and Photochemical Oxidants, Maricopa County Urban Planning Area.

(33) The *Metropolitan Pima County Nonattainment Area Plan for CO* was submitted by the Governor's designee on March 20, 1979.

(34) The *Metropolitan Pima County Nonattainment Area Plan for TSP* was submitted by the Governor's designee on March 27, 1979.

(35) The following amendments to the plan were submitted on April 10, 1979, by the Governor's designee.

(i) Yuma County Air Pollution Control District.

(A) New or amended Rules 8–1–1.2 8–1–1.3 thru 8–1–1.6 and 8–1–1.8 thru 8–1–1.13; 8–1–2.1 thru 8–1–2.6 and 8–1–2.8; 8–1–3.1 thru 8–1–3.6, 8–1–3.7 (except paragraph "F") and 8–1–3.8 thru 8–1–3.20; and Appendices I and II.

(B) Previously approved on April 12, 1982 in paragraph (i)(A) of this section and now deleted without replacement Rules 8–1–1.2 through 8–1–1.6, 8–1–1.8 through 8–1–1.13, 8–1–2.1 through 8–1–2.6, 8–1–2.8, 8–1–3.1 through 8–1–3.20, Appendix I, and Appendix II.

(36) The following amendments to the plan were submitted on July 3, 1979 by the Governor's designee.

(i) Revision to the Nonattainment Area Plan for Carbon Monoxide and Photochemical Oxidants, Maricopa County Urban Planning Area.

(37) The following amendments to the plan were submitted on September 20, 1979 by the Governor's designee.

(i) Arizona State Rules and Regulations for Air Pollution Control.

(A) New or amended rule R9–3–515 (Paragraphs C.1.a. to C.1.h.; C.2; C.3, C.3.b., C.3.c., and C.3.h.; C.4.c. to C.4.g. and C.4.i.; C.5 and C.5.b. to C.5.d.; C.6.b.i. to C.6.b.iii., C.6.b.vi., C.6.b.vii., and C.6.c.; and C.8.).

(ii) "ASARCO Incorporated, Hayden Copper Smelter, State Implementation Plan Determination of Good Engineering Practice Stack Height," September 17, 1979, issued by ADHS.

(38) The following amendment to the plan were submitted on October 9, 1979, by the Governor's designee.

(i) Pima County Health Department.

(A) New or amended Regulation 10: Rules 101–103; Regulation 11: Rules 111–113; Regulation 12: Rules 121–123; Regulation 13: Rules 131–137; Regulation 14: Rules 141 and 143–147; Regulation 15: Rule 151; Regulation 16: Rules 161–165; Regulation 17: Rules 172–174; Regulation 18: Rules 181 and 182; Regulation 20: Rules 201–205; Regulation 22: Rules 221–226; Regulation 23: Rules 231–232; Regulation 24: Rules 241 and 243–248; Regulation 25: Rules 251 and 252; Regulation 30: Rules 301 and 302; Regulation 31: Rules 312–316 and 318; Regulation 32: Rule 321; Regulation 33: Rules 331 and 332; Regulation 34: Rules 341–344; Regulation 40: Rules 402 and 403; Regulation 41: Rules 411–413; Regulation 50: Rules 501–503 and 505–507; Regulation 51: Rules 511 and 512; Regulation 60: Rule 601; Regulation 61: Rule 611 (Paragraph A.1 to A.3) and Rule 612; Regulation 62: Rules 621–624; Regulation 63: Rule 631; Regulation 64: Rule 641; Regulation 70: Rules 701–705 and 706 (Paragraphs A to C, D.3, D.4, and E); Regulation 71: Rules 711–714; Regulation 72: Rules 721 and 722; Regulation 80: Rules 801–804; Regulation 81: Rule 811; Regulation 82: Rules 821–823; Regulation 90: Rules 901–904; Regulation 91: Rules 911 (except Methods 13-A, 13-B, 14, and 15; and Rules 912, and 913; Regulation 92: Rules 921–924; and Regulation 93: Rules 931 and 932.

Rules 101–103; Regulation 11: Rules 111–113; Regulation 12: Rules 121–123; Regulation 13: Rules 131–137; Regulation 14: Rules 141 and 143–147; Regulation 15: Rule 151; Regulation 16: Rules 161–165; Regulation 17: Rules 172–174; Regulatiotion 24: Rules 241 and 243–248;

Regulation 25: Rules 251 and 252; Regulation 30: Rules 301 and 302; Regulation 31: Rules 312–316 and 318; Regulation 32: Rule 321; Regulation 33: Rules 331 and 332; Regulation 34: Rules 341–344; Regulation 40: Rules 402 and 403; Regulation 41: Rules 411–413; Regulation 50: Rules 501–503 and 505–507; Regulation 51: Rules 511 and 512; Regulation 60: Rule 601; Regulation 61: Rule 611 (Paragraph A.1 to A.3) and Rule 612; Regulation 62: Rules 621–624; Regulation 63: Rule 631; Regulation 64: Rule 641; Regulation 70: Rules 701–705 and 706 (Paragraphs A to C, D.3, D.4, and E); Regulation 71: Rules 711–714; Regulation 72: Rules 721 and 722; Regulation 80: Rules 801–804; Regulation 81: Rule 811; Regulation 82: Rules 821–823; Regulation 90: Rules 901–904; Regulation 91: Rules 911 (except Methods 13–A, 13–B, 14, and 15; and Rules 912, and 913; Regulation 92: Rules 921–924; and Regulation 93: Rules 931 and 932.

(B) New or amended Regulation 17: Rule 171, paragraphs B.1, B.1.a, B.7, B.8, C.1.a, C.1.b, C.2.a, C.2.c, C.2.d, C.3.a, and E.1.b; Regulation 42: Rules 421, 422, 423, 424, 425, and 426; and Regulation 50: Rule 504.

(C) Previously approved on April 16, 1982 and now deleted without replacement Rules 141, 143 to 147, 702, 711 to 714.

(39) The following amendments to the plan were submitted on November 8, 1979 by the Governor's designee.

(i) Nonattainment Area Plan for Total Suspended Particulates, Maricopa County Urban Planning Area.

(40) [Reserved]

(41) The following amendments to the plan were submitted on February 15, 1980, by the Governor's designee.

(i) 1.0 Air Quality Surveillance Network.

(42) The *Technical Basis of New Source Review Regulations, Pima County, Arizona, February 6, 1980* (AQ–125–a) was submitted by the Governor's designee on February 28, 1980.

(43) The following amendments to the plan were submitted on April 1, 1980 by the Governor's designee.

(i) Arizona State Rules and Regulations for Air Pollution Control.

(A) R9–3–101, A., Nos. 7, 27, 46, 52, 54, 72, 73, 74, 81, 84, 85, 86, 88, 89, 92, 96, 97, 98, 111, 117, 118, and 122; R9–3–301, paragraphs B–1, B–2, C, E, F, H, I, J, K, M, N, O, P, and Q; R9–3–302, (except paragraphs D, E, and I); R9–3–303; R9–3–306, paragraphs B–2, C–1, C–3, and C–5 to C–7, E, F, G–1, G–3, G–4, H, and I; and R9–3–307, paragraphs A, B, D, and F.

(B) New or amended Rules R9–3–101 (Nos. 5, 15, 16, 42, 49, 51, 55, 94, 101, 103, 106, 126, 127, and 133), R9–3–201 (paragraph D.2), R9–3–202 (Paragraph D.2), R9–3–203 (Paragraph D.2), R9–3–204 (Paragraph C.2), R9–3–205 (Paragraph C.2), R9–3–206 (Paragraph C.2), R9–3–207 (Paragraph C.2), R9–3–313 (Paragraph F.1.a.i and ii), R9–3–401, R9–3–405, R9–3–408, R9–3–501 (Paragraph A to C), R9–3–502 (Paragraph A to A.4), R9–3–503 (Paragraphs B, C.1,C.2.a. to C.2.f., C.4 and C.5), R9–3–504 (Paragraph A.1 to A.4), R9–3–508 (Paragraph B.1 to B.6), R9–3–510 (Paragraph A.1 and A.2), R9–3–511 (Paragraph A.1 to A.5), R9–3–512 (Paragraph A.1 to A.5), R9–3–513 (Paragraph A.1 to A.5), R9–3–514 (Paragraph A.2), R9–3–516 (Paragraph A.1 to A.6), R9–3–517 (Paragraph A.1 to A.5), R9–3–518 (Paragraph A.1 to A.5), R9–3–520 (Paragraph A.1 to A.6), R9–3–521 (Paragraph A.1 to A.5), and Appendices 1 and 2.

(ii) Arizona Lead SIP Revision.

(44) The following amendments to the plan were submitted on June 23, 1980 by the Governor's designee.

(i) Maricopa County Bureau of Air Pollution Control Rules and Regulations.

(A) Rule 34, Organic Solvents.

(B) New or amended Rules 2 (except #49 and 57), 3, 24, 25, 25, 26, 27, 30, 31(A), (B), and (H), 32, (G), (H), (J), and (K), 40, 70–72, and 74 and deletion of "ee".

(45) The following amendments to the plan were submitted on July 17, 1980 by the Governor's designee.

(i) Arizona State Rules and Regulations for Air Pollution Control.

(A) R–9–3–101, A., Nos. 73, 74, 75, 83, 86, 87, 88, 90, 91, 94, 98, 99, 100, 113, 119, 120, and 124; R9–3–301, paragraphs A, B–3, G, I, J, K, L, M, N, O, P, Q, and R; R9–3–306, paragraphs A, B–1, B–3, B–4, C–2, C–4, and G–2; and R9–3–320, paragraphs B and C.

(B) New or amended Rules R9–3–101 (Nos. 6(b), 10, 12, 14, 36, 50, 55, 77, 84, and 92), R9–3–311 (Paragraph B), R9–3–313 (Paragraphs A.2.a., D.2, D.4, F.1.C, and F.2.a.), R9–3–320 (Paragraph A), R9–3–

502 (Paragraph C.1), R9–3–503 (Paragraph C, C.2, C.2.g. and C.3), R9–3–504 (Paragraph A), R9–3–505 (Paragraph B.1.a, B.2.a), R9–3–506 (Paragraph A to A.1), R9–3–507 (Paragraphs A to C), R9–3–508 (Paragraph B), R9–3–509, R9–3–510 (Paragraph A), R9–3–511 (Paragraph A), R9–3–512 (Paragraph A), R9–3–513 (Paragraph A), R9–3–514 (Paragraphs A to A.1), R9–3–516 (Paragraph A), R9–3–517 (Paragraph A), R9–3–518 (Paragraph A), R9–3–519 (Paragraph A to A.1, A.3, and A.3.d), R9–3–520 (Paragraph A), R9–3–521 (Paragraph A), R9–3–522 (Paragraph A), R9–3–523 (Paragraph A), R9–3–524 (Paragraphs A, B, D, and D.3), R9–3–525 (Paragraph A), R9–3–528 (Paragraphs A and F.5), Section 3, Method 11; Section 3.16, Method 16; Section 3.19, Method 19; Section 3.20, Method 20; and Appendix 10 (Sections A10.2 and A10.2.1).

(C) New or amended Rule R9–3–515 (Paragraphs A; and C.6, C.6.b, and C.6.b.v.).

(46) The following amendments to the plan were submitted on August 7, 1980, by the Governor's designee.

(i) Pinal-Gila Counties Air Quality Control District.

(A) New or amended Rules 7–1–1.2, 7–1–1.3(C), 7–3–1.1, 7–3–1.4(C), 7–3–1.7(F), and 7–3–3.4.

(B) Previously approved on April 12, 1982 in paragraph (c)(46)(i)(A) of this section and now deleted without replacement Rules 7–1–1.2 and 7–1–1.3(C).

(C) Previously approved on April 12, 1982 in paragraph (c)(46)(i)(A) of this section and now deleted without replacement with respect to Gila County only Rules 7–3–1.1, 7–3–1.4(C), 7–3–1.7(F), and 7–3–3.4.

(D) Previously approved on April 12, 1982 in paragraph (c)(46)(i)(A) of this section and now deleted without replacement with respect to Pinal County only Rule 7–3–3.4.

(47) The following amendments to the plan were submitted on September 10, 1980, by the Governor's designee.

(i) Arizona State Rules and Regulations and Air Pollution Control.

(A) New or amended Rules R9–3–101 (Nos. 24, 55, 102, and 115 (25–54, 56–101, 103–114, and 116–140 are renumbered only), R9–3–201 (Paragraphs A to D.1 and E), R9–3–202 (Paragraphs A to D.1 and E), R9–3–203 (Paragraphs A to D.1 and E), R9–3–204 (Paragraphs A to C.1 and D), R9–3–205 (Paragraphs A to C.1 and D), R9–3–206 (Paragraphs A to C.1 and D), R9–3–207 (Paragraphs A to C.1 and D), and R9–3–216.

(48) Arizona Lead SIP Revision submitted by the State on September 26, 1980.

(49) The following amendments to the plan were submitted on July 13, 1981 by the Governor's designee.

(i) Arizona Revised Statute Sec. 36–1718.

(50) The following amendments to the plan were submitted on July 13, 1981, by the Governor's designee.

(i) Arizona State Rules and Regulations for Air Pollution Control.

(A) New or amended Rules R9–3–310 (Paragraphs A and B), R9–3–501 (Paragraph D), R9–3–503 (Paragraph C.6), R9–3–506 (Paragraph C to C.1), and Appendix 10 (Sections A10.1–A10.1.3.2).

(B) New or amended Rule R9–3–515 (Paragraph C.4.a. and C.4.b.).

(ii) Arizona Revised Statutes.

(A) Arizona County: Chapter 6, Article 8. Air Pollution, Sections 36–770 to 36–778, 36–779 to 36–779.07, 36–780, 36–780.01, 36–781 to 36–783, 36–784 to 36–784.04, 36–785, 36–785.01, 36–786 to 36–788, 36–789 to 36–789.02, 36–790, and 36–791.

(B) Arizona State: Chapter 14, Air Pollution, Article 1. State Air Pollution Control, Sections 36–1700 to 36–1702, 36–1704 to 36–1706, 36–1707 to 36–1707.06, 36–1708, 36–1720.02, and 36–1751 to 36–1753.

(C) Previously approved on June 18, 1982 and now deleted without replacement Statutes 36–781, 36–782, 36–784, 36–784.01 to 36–784.04, 36–785, 36–785.01, and 36–786 to 36–788.

(51) The following amendments to the plan were submitted on June 1, 1981, by the Governor's designee.

(i) Pima County Health Department.

(A) New or amended Regulation 14: Rule 142; Regulation 20: Rule 204; Regulation 24: Rule 242; Regulation 26: Rule 261; Regulation 50: Rule 504; Regulation 61: Rule 611 (Paragraph A); Regulation 70: Rule 706 (Paragraphs D.1 and D.2); and Regulation 91: Rule 911 (Methods 19 and 20).

(B) Previously approved on April 16, 1982 and now deleted without replacement Rule 142.

(52) The following amendments to the plan were submitted on August 5, 1981, by the Governor's designee.

(i) Arizona State Rules and Regulations for Air Pollution Control.

(A) New or amended Rules R9–3–1002, R9–3–1003, R9–3–1005, R9–3–1006, R9–3–1008, R9–3–1010 to R9–3–1014, R9–3–1016, R9–3–1019, R9–3–1023, R9–3–1025, R9–3–1027, and R9–3–1030.

(ii) Arizona Revised Statutes.

(A) Inspection and Maintenance—Chapter 14, Article 3. Annual Emissions Inspection of Motor Vehicles, Sections 36–1771 to 36–1775, 36–1708.01, 36–1709 to 36–1711, 36–1712 to 36–1712.04, 36–1713, 36–1713.01, 36–1714 to 36–1717, 36–1718, 36–1718.01, 36–1719, 36–1720, and 36–1776 to 36–1780.

(B) Previously approved on June 18, 1982 and now deleted without replacement Statutes 36–1709 to 36–1712, 36–1712.01 to 36–1712.04, 36–1713, 36–1713.01, and 36–1714 to 36–1716.

(53) The following amendments to the plan were submitted on March 8, 1982, by the Governor's designee.

(i) Maricopa County Bureau of Air Pollution Control Rules and Regulations.

(A) Rules 2 (Nos. 11 and 33, and deletion of Nos. 18, 49, 50, 52, and 54), 28 and 33.

(ii) The Improvement Schedules for Transit System and Rideshare Program in Metropolitan Pima County.

(54) The following amendments to the plan were submitted on June 3, 1982 by the Governor's designee.

(i) Arizona State Rules and Regulations for Air Pollution Control.

(A) New or amended Rule R9–3–515 Paragraphs C to C.1. and C.1.i.; C.3.a. and C.3.d. to C.3.g.; C.4. and C.4.h.; C.5.a.; C.6.a. and C.6.b.iv.; and C.9.).

(B) New or amended rules R9–3–101 (Nos. 3, 7, 8, 17, 18, 19, 20, 21, 29, 34, 35, 37, 56, 61, 62, 63, 68, 69, 75, 77, 78, 79, 88, 89, 90, 91, 98, 99, 101, 117, 122, 129, 133, 136, 146, and 157; 53 and 123 are deleted); R9–3–217; R9–3–301; R9–3–304; R9–3–305; R9–3–306 (paragraph A only); R9–3–320 (Repealed and Reserved); R9–3–1101 (paragraphs A, C, and D); Appendix 1; and Appendix 2.

(C) New or amended rules R9–3–101 (Nos. 4 to 6, 9 to 16, 22 to 28, 30 to 33, 36, 38 to 55, 57 to 60, 64 to 67, 70 to 74, 76, 80 to 87, 92 to 97, 100, 102 to 116, 118 to 121, 123 to 128, 130 to 132, 134, 135, 137 to 141, 142 to 145, 147 to 156, and 158 are renumbered only); R9–3–219; R9–3–502 (paragraph A to A.1 and A.2); R9–3–505 (paragraph B to B.1, B.2, B.3, and B.4); R9–3–508 (paragraph B to B.1, B.2, and B.5); R9–3–511 (paragraph A to A.1 and A.2); R9–3–513 (paragraph A to A.1 and A.2); R9–3–516 (paragraph A to A.1 and A.2); R9–3–517 (paragraph A to A.1); R9–3–518 (paragraph A to A.1 and A.2); R9–3–520 (paragraph A to A.1 and A.2); R9–3–521 (paragraph A to A.1 and A.2); R9–3–522 (paragraph A to A.1 and A.2); and Appendix 8 (Sections A8.3.1 and A8.3.2).

(D) New or amended rules R9–3–302 (paragraphs A–H); and R9–3–303 (paragraphs A to C and E to I), adopted on May 26, 1982.

(E) Previously approved and now removed (without replacement) rule R9–3–101, No. 46.

(55) The following amendments to the plan were submitted by the Governor's designee on March 4, 1983.

(i) Incorporation by reference.

(A) Maricopa County Health Department, Bureau of Air Quality Control.

(*1*) New or amended rule 21.0:A-C, D.1.a-d, and E adopted on October 25, 1982.

(56) The following amendments to the plan were submitted on February 3, 1984, by the Governor's designee.

(i) Arizona State Rules and Regulations for Air Pollution Control.

(A) New or amended rules R9–101 (Nos. 98 and 158), R9–3–201 to R9–3–207, R9–3–215, R9–3–218, R9–3–310, R9–3–322, R9–3–402, R9–3–404, R9–3–502, R9–3–515 (paragraph C.3., C.5., and C.6.b.v.), R9–3–529, R9–3–1101, and Appendices 1 and 11.

(B) New or amended rules R9–3–101, Nos. 135 and 157, adopted on September 19, 1983.

(57) The following amendments to the plan were submitted by the Governor's designee on April 17, 1985.

(i) Incorporation by reference.

(A) Maricopa County Health Department, Bureau of Air Quality Control.

(*1*) New or amended regulations: rule 21.0: D.1., D.1.e, f, and g adopted on July 9, 1984.

(58) The following amendments to the plan were submitted by the Governor's designee on October 18, 1985.

(i) Incorporation by reference.

(A) Pima County Health Department.

(*1*) New or amended regulations: Regulation 16: Rule 166; Regulation 17; Rules 171 and 175; Regulation 20: Rule 202; Regulation 37: Rules 371, 372, 373, Figure 371–A, Figure 371–C, and Figure 372; and Regulation 38, Rule 381, A1, 2, 3, 4, 5, and B, adopted on December 6, 1983.

(59) The following amendments to the plan were submitted by the Governor's designee on October 24, 1985.

(i) Incorporation by reference.

(A) Arizona Department of Health Services.

(*1*) New or amended rule R9–3–303, adopted on September 28, 1984.

(60) The following amendments to the plan were submitted by the Governor's designee on October 5, 1987.

(i) Incorporation by reference.

(A) Arizona Department of Health Services.

(*1*) New or amended rules R9–3–1001 (Nos. 8, 25, 33, 34, 38, 39, 40, and 43, No. 8), R9–3–1003, R9–3–1005, R9–3–1006, R9–3–1008, R9–3–1009, R9–3–1010, R9–3–1011, R9–3–1013, R9–3–1016, R9–3–1018, R9–3–1019, R9–3–1025, R9–3–1026, R9–3–1027, R9–3–1028, R9–3–1030, and R9–3–1031, adopted on December 23, 1986.

(*2*) Previously approved and now removed (without replacement), Rule R9–3–1014.

(B) The Maricopa Association of Governments (MAG) 1987 Carbon Monoxide (CO) Plan for the Maricopa County Area, MAC CO Plan Commitments for Implementation, and Appendix A through E, Exhibit 4, Exhibit D, adopted on July 10, 1987.

(61) The following amendments to the plan were submitted by the Governor's designee on January 6, 1988.

(i) Incorporation by reference.

(A) The 1987 Carbon Monoxide State Implementation Plan Revision for the Tucson Air Planning Area adopted on October 21, 1987.

(62) The following amendments to the plan were submitted by the Governor's designee on March 23, 1988.

(i) Incorporation by reference.

(A) Arizona Revised Statutes.

(*1*) Senate Bill 1360: Section 6: ARS 15–1444–C (added), Section 7: QRS 15–1627–F (added), Section 21: ARS 49– 542–A (amended, Section 21: ARS 49–542–E (added), Section 21: ARS 49–542–J.3.(b) (amended), and Section 23: ARS 49–550–E (added), adopted on May 22, 1987.

(*2*) Senate Bill 1360: Section 2: ARS 9-500.03 (added), Section 14: ARS 41–796.01 (added); Section 17: 49–454 (added), Section 18: 49–474.01 (added), and Section 25: ARS 49–571 (added), adopted on May 22, 1987.

(63) The following amendments to the plan were submitted by the governor's designee on May 26, 1988:

(i) Incorporation by reference.

(A) Travel reduction ordinances for Pima County: Inter governmental Agreement (IGA) between Pima County, City of Tucson, City of South Tucson, Town of Oro Valley and Town of Marana, April 18, 1988; Pima County Ordinance No. 1988–72, City of Tucson ordinance No. 6914, City of South Tucson Resolutions No. 88–01, 88–05, Town of Oro Valley Resolutions No. 162, 326 and 327, Town of Marana Resolutions No. 88–06, 88–07 and Ordinance No. 88.06.

(64) The following amendments to the plan were submitted by the Governor's designee on June 1, 1988.

(i) Incorporation by reference.

(A) Letter from the Arizona Department of Environmental Quality, dated June 1, 1988, committing to administer the provisions of the Federal New Source Review regulations consistent with EPA's requirements. The commitments apply to the issuance of, or revision to, permits for any source which is a major stationary source or major modification as defined in 40 Code of Federal Regulations, part 51, subpart I.

(65) The following amendments to the plan were submitted by the Governor's designee on July 18, 1988.

(i) Incorporation by reference.

(A) Arizona Revised Statutes.

(*1*) House Bill 2206, Section 2: ARS 15–1627 (amended); Section 6: Title 28, ARS Chapter 22, Article 1, ARS 28–2701, ARS 28–2702, ARS 28–2703, ARS 28–2704, and ARS 28–2705 (added); Section 7: ARS 41.101.03 (amended); Section 9: ARS 41–2605 (amended); Section 10: ARS 41–2066 (amended); Section 11: ARS 41–2083 (amended); Section 13: Title 41, Chapter 15, Article 6, ARS 41–2121: Nos. 1, 3, 4, 5, 6, 7, 8, and 9, ARS 41–2122, ARS 41–2123, ARS 41–2124 (added); Section 15: Title 49, Chapter 3, Article 1, ARS 49–403 to 49–406 (added); Section 17: Title 49, Chapter 3, Article 3, ARS 49–506

(added); Section 18; ARS 49–542 (amended); Section 19: ARS 49–550 (amended); Section 20: ARS 49–551 (amended); Section 21: Title 49, Chapter 3, Article 5, ARS 49–553 (added), Section 22: ARS 49–571 (amended); Section 23: Title 49, Chapter 3, Article 8, ARS 49–581, ARS 49–582, ARS 49–583, ARS 49–584, ARS 49–585; ARS 49–586, ARS 49–588, ARS 49–590, and ARS 49–593 (added); Section 25: Definition of major employer, Section 27: Appropriations; Section 29: Delayed effective dates, adopted on June 28, 1988.

(*2*) House Bill 2206 section 6 which added, under Arizona Revised Statutes, title 28, chapter 22, new sections 28–2701 through 28–2708, and section 13 which added, under Arizona Revised Statutes, title 41, chapter 15, Article 6 new sections 41–2125A and 41–2125B. (Oxygenated fuels program for Pima County.)

(66) The following amendments to the plan were submitted by the Governor's designee on July 22, 1988.

(i) Incorporation by reference.

(A) Letter from the Pima County Health Department, Office of Environmental Quality, dated April 24, 1988 committing to administer the New Source Review provisions of their regulations consistent with EPA's requirements. The commitments apply to the issuance of, or revision to, permits for any source which is a major stationary source of major modification as defined in 40 Code of Federal Regulations, part 51, subpart I.

(B) Letter from Maricopa County Department of Health Services, Division of Public Health, dated April 28, 1988 and submitted to EPA by the Arizona Department of Environmental Quality July 25, 1988, committing to administer the New Source Review provisions of their regulations, consistent with EPA's requirements. These commitments apply to the issuance of, or revision to, permits for any source which is a major stationary source or major modification as defined in the Code of Federal Regulations, part 51, subpart I.

(C) Addendum to MAG 1987 Carbon Monoxide Plan for the Maricopa County Nonattainment Area, July 21, 1988 (supplemental information related to the SIP revision of July 18, 1988).

(D) Commitment in the July 22, 1988 submittal letter to apply the oxygenated fuels program of the July 18, 1988 submittal to Pima County.

(67) Regulations for the Maricopa County Bureau of Air Pollution Control were submitted on January 4, 1990 by the Governor's designee.

(i) Incorporation by reference.

(A) Amended regulations: Regulation II, rule 220 and Regulation III, rule 335, both adopted July 13, 1988.

(B) Amended Maricopa County Division of Air Pollution Control Rule 314, adopted July 13, 1988.

(C) Amended Regulation VI, Rule 600, revised on July 13, 1988.

(D) Rules 312 and 314, adopted on July 13, 1998.

(68) The following amendments to the plan were submitted by the Governor's designee on June 11, 1991.

(i) Incorporation by reference.

(A) Arizona Revised Statutes.

(*1*) House Bill 2181 (approved, May 21, 1991), section 1: Arizona Revised Statute (A.R.S.) 41–2065 (amended); section 2: A.R.S. 41–2083 (amended); section 3: A.R.S. section 41–2122 (amended); section 4: A.R.S. Section 41–2123 (amended); and section 5: A.R.S. section 41–2124 (repealed).

(69) The following amendment to the plan was submitted by the Governor's designee on May 27, 1994.

(i) Incorporation by reference.

(A) Maricopa County Bureau of Air Pollution Control stage II vapor recovery program, adopted on August 27, 1993.

(70) New and amended regulations for the Maricopa County Environmental Services Department—Air Pollution Control were submitted on June 29, 1992, by the Governor's designee.

(i) Incorporation by reference.

(A) New Rules 337, 350, and 351, adopted on April 6, 1992.

(71) New and amended regulations for the following agencies were submitted on August 15, 1994 by the Governor's designee.

(i) Incorporation by reference.

(A) Pinal County Air Quality Control District.

(*1*) Chapter 1, Article 3, section 1–3–140, subsections 5, 15, 21, 32, 33, 35, 50,

51, 58, 59, 103, and 123, adopted on November 3, 1993; Chapter 3, Article 1, section 3–1–081(A)(8)(a), adopted on November 3, 1993; Chapter 3, Article 1, section 3–1–084, adopted on August 11, 1994; and Chapter 3, Article 1, section 3–1–107, adopted on November 3, 1993.

(72) New and amended plans and regulations for the following agencies were submitted on November 13, 1992 by the Governor's designee.

(i) Incorporation by reference.

(A) Arizona Department of Environmental Quality.

(*1*) Small Business Stationary Source Technical and Environmental Compliance Assistance Program, adopted on November 13, 1992.

(B) Maricopa County Environmental Quality and Community Services Agency.

(*1*) Rule 340, adopted on September 21, 1992.

(73) [Reserved]

(74) Plan revisions were submitted by the Governor's designee on March 3, 1994.

(i) Incorporation by reference.

(A) Maricopa County Environmental Services Department new Rule 316, adopted July 6, 1993, and revised Rule 311, adopted August 2, 1993. Note: These rules are restored as elements of the State of Arizona Air Pollution Control Implementation Plan effective September 3, 1997.

(B) [Reserved]

(75) Program elements submitted on November 14, 1994, by the Governor's designee.

(i) Incorporation by reference.

(A) Arizona Department of Environmental Quality.

(*1*) Basic and Enhanced Inspection and Maintenance Vehicle Emissions Program. Adopted on September 15, 1994.

(76) Program elements were submitted on February 1, 1995 by the Governor's designee.

(i) Incorporation by reference.

(A) Small Business Stationary Source Technical and Environmental Compliance Assistance Program, adopted on February 1, 1995.

(77) Amended regulations for the following agency were submitted on December 19, 1994, by the Governor's designee.

(i) Incorporation by reference.

(A) Maricopa County Environmental Services Department.

(*1*) Rule 334, adopted on September 20, 1994.

(78) New and amended regulations for the Maricopa County Environmental Services Department—Air Pollution Control were submitted on February 4, 1993, by the Governor's designee.

(i) Incorporation by reference.

(A) New Rule 352, adopted on November 16, 1992.

(B) [Reserved]

(C) Rule 339, adopted on November 16, 1992.

(79) New and amended regulations for the following agencies were submitted on June 29, 1992 by the Governor's designee.

(i) Incorporation by reference.

(A) Maricopa County Environmental Quality and Community Services Agency.

(*1*) Rule 353, adopted on April 6, 1992.

(80) New and amended regulations for the following agencies were submitted on August 10, 1992 by the Governor's designee.

(i) Incorporation by reference.

(A) Maricopa County Environmental Quality and Community Services Agency.

(*1*) Rules 331 and 333, adopted on June 22, 1992.

(81) Amended regulation for the following agency was submitted on August 16, 1994, by the Governor's designee.

(i) Incorporation by reference.

(A) Maricopa County Environmental Services Department.

(*1*) Rule 341, adopted on August 5, 1994.

(82) New and amended rules and regulations for the Maricopa County Environmental Services Department—Air Pollution Control were submitted on August 31, 1995, by the Governor's designee.

(i) Incorporated by reference.

(A) Rule 343, adopted on February 15, 1995.

(B) [Reserved]

(C) Rule 351, revised on February 15, 1995.

(D) Rule 318 and Residential Woodburning Restriction Ordinance, adopted on October 5, 1994.

(E) Maricopa County.

(*1*) Ordinance P–7, Maricopa County Trip Reduction Ordinance, adopted May 26, 1994.

(83) New and revised rules and regulations for the Maricopa County Environmental Services Department-Air Pollution Control were submitted on February 26, 1997, by the Governor's designee.

(i) Incorporation by reference.

(A) Rules 331, 333, and 334, revised on June 19, 1996, and Rule 338, adopted on June 19, 1996.

(B) Rule 336, adopted on July 13, 1988 and revised on June 19, 1996.

(84) Amended regulations for the Pinal County Air Quality Control District were submitted on November 27, 1995, by the Governor's designee.

(i) Incorporation by reference.

(A) Rules 1–1–020, 1–1–030, 1–1–040, 1–1–060, 1–1–070, 1–1–080, 1–1–100, 1–2–110, 2–1–010, 2–1–020, 2–1–030, 2–1–040, 2–1–050, 2–1–060, 2–1–070, 2–2–080, 2–2–090, 2–3–100, 2–3–110, 2–4–120, 2–4–130, 2–4–140, 2–4–150, 2–5–170, 2–5–210, 2–6–220, 2–7–230, 2–7–240, 2–7–250, 2–7–260, 2–7–270, 3–1–020, 3–1–132, adopted on June 29, 1993.

(B) Rules 1–1–090, 1–2–120, 3–1–010, 3–1–030, 3–1–055, 3–1–065, 3–1–070, 3–1–082, 3–1–085, 3–1–087, 3–1–090, 3–1–102, 3–1–105, 3–1–110, 3–1–120, 3–1–140, 3–1–150, 3–1–160, 3–1–170, 3–1–173, 3–1–175, 3–1–177, 3–2–180, 3–2–185, 3–2–190, 3–2–195, 3–3–200, 3–3–203, 3–3–205, 3–3–260, 3–3–270, 3–3–275, 3–3–280, adopted on November 3, 1993.

(C) Rules 1–1–010, 1–1–106, 2–5–190, 2–5–200, 3–1–042, 3–1–060, 3–1–081, 3–1–083, 3–1–084, 3–1–089, 3–1–103, 3–1–107, 3–1–109, 3–3–210, 3–3–250, adopted on February 22, 1995.

(D) Rules 1–3–130, 1–3–140, 2–5–160, 2–5–180, 3–1–040, 3–1–050, adopted on October 12, 1995.

(E) Rules 5–22–950, 5–22–960, and 5–24–1045 codified on February 22, 1995.

(F) Amendments to Rules 5–18–740, 5–19–800, and 5–24–1055 adopted on February 22, 1995.

(G) Previously approved on April 9, 1996 in paragraph (c)(84)(i)(A) of this section and now deleted without replacement, Rule 3–1–020.

(H) Previously approved on April 9, 1996 in paragraph (c)(84)(i)(D) of this section and now deleted without replacement, Rule 1–3–130.

(I) Rules 2–8–280, 2–8–290, 2–8–300, 2–8–310, and 2–8–320, adopted on June 29, 1993.

(J) Rules 3–8–700 and 3–8–710, amended on February 22, 1995.

(K) Rule 5–24–1040, codified on February 22, 1995.

(85) New and revised rules and regulations for the Maricopa County Environmental Services Department-Air Pollution Countrol were submitted on March 4, 1997, by the Governor's designee.

(i) Incorporation by reference.

(A) Rule 337, revised on November 20, 1996, and Rules 342 and 346, adopted on November 20, 1996.

(86) [Reserved]

(87) New and amended fuel regulations for the following Arizona Department of Environmental Quality plan revisions were submitted on April 29, 1997, by the Governor's designee.

(i) Incorporation by reference.

(A) Arizona Revised Statutes.

(*1*) Section 13 of H.B, 2001 (A.R.S. § 41–2083(E)), adopted on November 12, 1993.

(88) Plan revisions were submitted on May 7, 1997 by the Governor's designee.

(i) Incorporation by reference.

(A) Maricopa County Environmental Services Department.

(*1*) Rule 310, adopted September 20, 1994.

(*2*) Resolution To Improve the Administration of Maricopa County's Fugitive Dust Program and to Foster Interagency Cooperation, adopted May 14, 1997.

(B) The City of Phoenix, Arizona.

(*1*) A Resolution of the Phoenix City Council Stating the City's Intent to Work Cooperatively with Maricopa County to Control the Generation of Fugitive Dust Pollution, adopted April 9, 1997.

(C) The City of Tempe, Arizona.

(*1*) A Resolution of the Council of the City of Tempe, Arizona, Stating Its Intent to Work Cooperatively with Maricopa County to Control the Generation of Fugitive Dust Pollution, adopted March 27, 1997.

(D) The Town of Gilbert, Arizona.

(*1*) A Resolution of the Mayor and the Common Council of the Town of Gilbert, Maricopa County, Arizona, Providing for the Town's Intent to Work Cooperatively with Maricopa County, Arizona, to Control the Generation of

Fugitive Dust Pollution, adopted April 15, 1997.

(E) The City of Chandler, Arizona.

(*1*) A Resolution of the City Council of the City of Chandler, Arizona, Stating the City's Intent to Work Cooperatively with Maricopa County to Control the Generation of Fugitive Dust Pollution, adopted March 27, 1997.

(F) The City of Glendale, Arizona.

(*1*) A Resolution of the Council of the City of Chandler, Maricopa County, Arizona, Stating Its Intent to Work Cooperatively with Maricopa County to Control the Generation of Fugitive Dust Pollution, adopted March 25, 1997.

(G) The City of Scottsdale, Arizona.

(*1*) A Resolution of the Scottsdale City Council Stating the City's Intent to Work Cooperatively with Maricopa County to Control the Generation of Fugitive Dust Pollution, adopted March 31, 1997.

(H) The City of Mesa, Arizona.

(*1*) A Resolution of the Mesa City Council Stating the City's Intent to Work Cooperatively with Maricopa County to Control the Generation of Particulate Air Pollution and Directing City Staff to Develop a Particulate Pollution Control Ordinance Supported by Adequate Staffing Levels to Address Air Quality, adopted April 23, 1997.

(89) Plan revisions were submitted on September 12, 1997 by the Governer's designee.

(i) Incorporation by reference

(A) Arizona Cleaner Burning Gasoline Interim rule submitted as a revision to the Maricopa Country Ozone Nonattainment Area Plan, adopted on September 12, 1997.

(90) Plan revisions were submitted on January 21, 1998 by the Governer's designee.

(i) Incorporation by reference.

(A) Arizona Cleaner Burning Gasoline Interim rule submitted as a revision to the PM–10 Maricopa County State Implementation Plan, adopted on September 12, 1997.

(91) The following amendments to the plan were submitted on October 6, 1997 by the Governor's designee.

(i) Incorporation by reference.

(A) 1996 Carbon Monoxide Limited Maintenance Plan for the Tucson Air Planning Area (as updated August, 1997).

(1) Base year (1994) emissions inventory and contingency plan, including commitments to follow maintenance plan contingency procedures by the Pima Association of Governments and by the member jurisdictions: the town of Oro Valley, Arizona (Resolution No. (R) 96–38, adopted June 5, 1996), the City of South Tucson (Resolution No. 96–16, adopted on June 10, 1996), Pima County (Resolution and Order No. 1996–120, adopted June 18, 1996), the City of Tucson (Resolution No. 17319, adopted June 24, 1996), and the town of Marana, Arizona (Resolution No. 96–55, adopted June 18, 1996).

(B) Arizona Revised Statutes. Senate Bill 1002, Sections 26, 27 and 28: ARS 41–2083 (amended), 41–2122 (amended), 41–2125 (amended), adopted on July 18, 1996.

(92) Plan revisions were submitted on March 3, 1995, by the Governor's designee.

(A) Arizona State Administrative Code Title 18, Chapter 2, Article 14, adopted on December 23, 1994.

(93) Plan revisions were submitted on September 4, 1998 by the Governor's designee.

(i) Incorporation by reference.

(A) Arizona Revised Statute 49–457.

(94) New and amended rules and regulations for the Maricopa County Environmental Services Department-Air Pollution Control were submitted on August 4, 1999, by the Governor's designee.

(i) Incorporation by reference.

(A) Rule 336, adopted on July 13, 1988 and revised on April 7, 1999 and Rule 348, adopted on April 7, 1999.

(B) Rule 318 and Residential Woodburning Restriction Ordinance, revised on April 21, 1999.

(C) Rule 347, adopted on March 4, 1998.

(D) Rule 316, adopted on April 21, 1999.

(E) Rule 344, adopted on April 7, 1999.

(F) Rule 349, adopted on April 7, 1999.

(G) Rule 331, revised on April 7, 1999.

(95) The following amendments to the plan were submitted on August 11, 1998 by the Governor's designee.

(i) Incorporation by reference.

(A) Arizona Revised Statutes.

(*1*) Senate Bill 1427, Section 14: ARS 49–401.01 (amended) and Section 15: 49–

406 (amended), approved on May 29, 1998.

(96) The following amendments to the plan were submitted on September 1, 1999 by the Governor's designee.

(i) Incorporation by reference.

(A) Arizona Revised Statutes.

(*1*) House Bill 2254, Section 1: ARS 41–3009.01 (amended); Section 2: 49–541.01 (amended); Section 3: 49–542 (amended); Section 4: 49–545 (amended); Section 5: 49–557 (amended); Section 6: 49–573 (amended); Section 7: 41–803 (amended) and Section 8: 41–401.01 (amended), adopted on May 18, 1999.

(*2*) House Bill 2189, Section 3: ARS 41–796.01 (amended); Section 9: 41–2121 (amended); Section 40: 49–401.01 (amended), Section 41: 49–402 (amended); Section 42: 49–404 (amended): Section 43:49–454 (amended); Section 44: 49–541 (amended); and Section 46: 49–571 (amended), adopted on May 18, 1999

(97) New and amended rules for the Arizona Department of Environmental Quality were submitted on March 26, 2001, by the Governor's designee.

(i) *Incorporation by reference.*

(A) Rules R18–2–310 and R18–2–310.01 effective on February 15, 2001.

(98) Plan revisions were submitted on July 11, 2000 by the Governor's designee.

(i) Incorporation by reference.

(A) Arizona Administrative Code R18–2–610 and R18–2–611 effective May 12, 2000.

(99) Plan revisions submitted on January 28, 2000 by the Governor's designee.

(i) Incorporation by reference.

(A) Maricopa County, Arizona.

(*1*) Residential Woodburning Restriction Ordinance adopted on November 17, 1999.

(100) Plan revisions submitted on February 16, 2000 by the Governor's designee.

(i) Incorporation by reference.

(A) Maricopa Association of Governments, Maricopa County, Arizona.

(*1*) Resolution to Adopt the Revised MAG 1999 Serious Area Particulate Plan for PM–10 for the Maricopa County Nonattainment Area (including Exhibit A, 2 pages), adopted on February 14, 2000.

(B) City of Avondale, Arizona.

(*1*) Resolution No. 1711–97; A Resolution of the City Council of the City of Avondale, Maricopa County, Arizona, To Implement Measures in the MAG 1997 Serious Area Particulate Plan for PM–10 and MAG 1998 Serious Area Carbon Monoxide Plan for the Maricopa County Area (including Exhibit A, 14 pages), adopted on September 15, 1997.

(*2*) Resolution No. 1949–99; A Resolution of the Council of the City of Avondale, Maricopa County, Arizona, Implementing Measures in the MAG 1998 Serious Area Particulate Plan for PM–10 for the Maricopa County Area (including Exhibit A, 7 pages), adopted on February 16, 1999.

(C) Town of Buckeye, Arizona.

(*1*) Resolution No. 15–97; A Resolution of the Town Council of the Town of Buckeye, Maricopa County, Arizona, To Implement Measures in the MAG 1997 Serious Area Carbon Monoxide Plan for the Maricopa County Area (including Exhibit A, 5 pages), adopted on October 7, 1997.

(D) Town of Carefree, Arizona.

(*1*) Town of Carefree Resolution No. 97–16; A Resolution of the Mayor and Common Council of the Town of Carefree, Arizona, To Implement Measures in the MAG 1997 Serious Area Particulate Plan for PM–10 and MAG 1998 Serious Area Carbon Monoxide Plan for the Maricopa County Area (including Exhibit A, 3 pages), adopted on September 2, 1997.

(*2*) Town of Carefree Resolution No. 98–24; A Resolution of the Mayor and Common Council of the Town of Carefree, Arizona, To Implement Measures in the MAG 1998 Serious Area Particulate Plan for PM–10 for the Maricopa County Area (including Exhibit A, 4 pages), adopted on September 1, 1998.

(*3*) Town of Carefree Ordinance No. 98–14; An Ordinance of the Town of Carefree, Maricopa County, Arizona, Adding Section 10–4 to the Town Code Relating to Clean-Burning Fireplaces, Providing Penalties for Violations (3 pages), adopted on September 1, 1998.

(E) Town of Cave Creek, Arizona.

(*1*) Resolution R97–28; A Resolution of the Mayor and Town Council of the Town of Cave Creek, Maricopa County, Arizona, Implementing Measures in the MAG 1997 Serious Area Particulate Plan for PM–10 and MAG 1998 Serious

Area Carbon Monoxide Plan for the Maricopa County Area (including Exhibit A, 4 pages), adopted on September 2, 1997.

(*2*) Resolution R98–14; A Resolution of the Mayor and Town Council of the Town of Cave Creek, Maricopa County, Arizona, To Implement Measures in the MAG 1998 Serious Area Particulate Plan for PM–10 for the Maricopa County Area (including Exhibit A, 1 page), adopted on December 8, 1998.

(F) City of Chandler, Arizona.

(*1*) Resolution No. 2672; A Resolution of the City Council of the City of Chandler, Arizona To Implement Measures in the MAG 1997 Serious Area Particulate Plan for PM–10 and MAG 1998 Serious Area Carbon Monoxide Plan for the Maricopa County Area (including Exhibit A, 16 pages), adopted on August 14, 1997.

(*2*) Resolution No. 2929; A Resolution of the City Council of the City of Chandler, Arizona, To Implement Measures in the MAG 1998 Serious Area Particulate Plan for PM–10 for the Maricopa County Area (including Exhibit A, 9 pages), adopted on October 8, 1998.

(G) City of El Mirage, Arizona.

(*1*) Resolution No. R97–08–20; Resolution To Implement Measures in the MAG 1997 Serious Area Particulate Plan for PM–10 and MAG 1998 Serious Area Carbon Monoxide Plan for the Maricopa County Area (including Exhibit A, 8 pages), adopted on August 28, 1997.

(*2*) Resolution No. R98–08–22; A Resolution of the Mayor and Common Council of the City of El Mirage, Arizona, Amending Resolution No. R98–02–04 To Implement Measures in the MAG 1997 Serious Area Particulate Plan for PM–10 for the Maricopa County Area (including Exhibit A, 5 pages), adopted on August 27,1998.

(*3*) Resolution No. R98–02–04; A Resolution To Implement Measures in the MAG 1997 Serious Area Particulate Plan for PM–10 for the Maricopa County Area (including Exhibit A, 5 pages), adopted on February 12,1998.

(H) Town of Fountain Hills, Arizona.

(*1*) Resolution No. 1997–49; A Resolution of the Common Council of the Town of Fountain Hills, Arizona, Adopting the MAG 1997 Particulate Plan for PM–10 and MAG 1998 Serious Area Carbon Monoxide Plan for the Maricopa County Area and Committing to Certain Implementation Programs (including Exhibit B, 5 pages and cover), adopted on October 2, 1997.

(*2*) Town of Fountain Hills Resolution No. 1998–49; Resolution To Implement Measures in the MAG 1998 Serious Area Particulate Plan for PM–10 for the Maricopa County Area (including Exhibit A, 7 pages), adopted on October 1, 1998. [INCORPORATION NOTE: Incorporated materials are pages 4 to 10 of the 11-page resolution package; pages 1 and 2 are cover sheets with no substantive content and page 11 is a summary of measures previously adopted by the Town of Fountain Hills.]

(I) Town of Gilbert, Arizona.

(*1*) Resolution No. 1817; A Resolution of the Common Council of the Town of Gilbert, Maricopa County, Arizona, Authorizing the Implementation of the MAG 1997 Serious Area Particulate Plan for PM–10 and the MAG Serious Area Carbon Monoxide Plan for the Maricopa County Area (including 15 pages of attached material), adopted on June 10, 1997.

(*2*) Resolution No. 1864; A Resolution of the Common Council of the Town of Gilbert, Arizona, Implementing Measures in the MAG 1997 Serious Area Particulate Plan for PM–10 for the Maricopa County Area (including Attachment A, 5 pages), adopted on November 25, 1997. [INCORPORATION NOTE: Attachment A is referred to as Exhibit A in the text of the Resolution.]

(*3*) Ordinance 1066; An Ordinance of the Common Council of the Town of Gilbert, Arizona Amending the Code of Gilbert by Amending Chapter 30 *Environment,* by adding New Article II *Fireplace Restrictions* Prescribing Standards for Fireplaces, Woodstoves, and Other Solid-Fuel Burning Devices in New Construction; Providing for an Effective Date of January 1, 1999; Providing for Repeal of Conflicting Ordinances; Providing for Severability (3 pages), adopted on November 25, 1997.

(*4*) Resolution No. 1939: A Resolution of the Common Council of the Town of Gilbert, Arizona, Expressing its Commitment to Implement Measures in the Maricopa Association of Governments (MAG) 1998 Serious Area Particulate

Plan for PM–10 for the Maricopa County Area (including Attachment A, 5 pages), adopted on July 21, 1998. [INCORPORATION NOTE: Attachment A is referred to as Exhibit A in the text of the Resolution.]

(J) City of Glendale, Arizona.

(*1*) Resolution No. 3123 New Series; A Resolution of the Council of the City of Glendale, Maricopa County, Arizona, Implementing Measures in the MAG 1997 Serious Area Particulate Plan for PM–10 and MAG 1998 Serious Area Carbon Monoxide Plan for the Maricopa County Area (including Exhibit A, 20 pages), adopted on June 10, 1997.

(*2*) Resolution No. 3161 New Series; A Resolution of the Council of the City of Glendale, Maricopa County, Arizona, Implementing Measures in the MAG 1997 Serious Area Particulate Plan for PM–10 for the Maricopa County Area (including Exhibit A, 6 pages), adopted on October 28, 1997.

(*3*) Resolution No. 3225 New Series; A Resolution of the Council of the City of Glendale, Maricopa County, Arizona, Implementing Measures in the MAG 1998 Serious Area Particulate Plan for PM–10 for the Maricopa County Area (including Exhibit A, 9 pages), adopted on July 28, 1998.

(K) City of Goodyear, Arizona.

(*1*) Resolution No. 97–604 Carbon Monoxide Plan; A Resolution of the Council of the City of Goodyear, Maricopa County, Arizona, Implementing Measures in the MAG 1997 Serious Area Particulate Plan for PM–10 and MAG 1998 Serious Area Carbon Monoxide Plan for the Maricopa County Area (including Exhibit A, 21 pages), adopted on September 9. [INCORPORATION NOTE: Adoption year not given on the resolution but is understood to be 1997 based on resolution number.]

(*2*) Resolution No. 98–645; A Resolution of the Council of the City of Goodyear, Maricopa County, Arizona, Implementing Measures in the MAG 1998 Serious Area Particulate Plan for PM–10 for the Maricopa County Area (including Attachment III, 7 pages), adopted on July 27, 1998.

(L) City of Mesa, Arizona.

(*1*) Resolution No. 7061; A Resolution of the City Council of the City of Mesa, Maricopa County, Arizona, to Implement Measures in the MAG 1997 Serious Area Particulate Plan for PM–10 and MAG 1998 Serious Area Carbon Monoxide Plan for the Maricopa County Area (including Exhibit A, 13 pages plus index page), adopted on June 23, 1997.

(*2*) Resolution No. 7123; A Resolution of the City Council of the City of Mesa, Maricopa County, Arizona, to Implement Measures in the MAG 1997 Serious Area Particulate Plan for PM–10 for the Maricopa County Area (including Exhibit A, 10 pages), adopted on December 1, 1997.

(*3*) Resolution No. 7360; A Resolution of the City Council of the City of Mesa, Maricopa County, Arizona, to Implement Measures in the MAG Serious Area Particulate Plan for PM–10 for the Maricopa County Area (including Exhibit A, 8 pages), adopted on May 3, 1999.

(*4*) Ordinance No. 3434; An Ordinance of the City Council of the City of Mesa, Maricopa County, Arizona, Relating to Fireplace Restrictions Amending Title 4, Chapter 1, Section 2 Establishing a Delayed Effective Date; and Providing Penalties for Violations (3 pages), adopted on February 2, 1998.

(M) Town of Paradise Valley, Arizona.

(*1*) Resolution Number 913; A Resolution of the Town of Paradise Valley, to Implement Measures in the MAG 1997 Serious Area Particulate Plan for PM–10 and MAG 1998 Serious Area Carbon Monoxide Plan for the Maricopa County Area (including Exhibit A, 9 pages), adopted on October 9, 1997.

(*2*) Resolution Number 945; A Resolution of the Mayor and Town Council of the Town of Paradise Valley, Arizona, to Implement Measures in the MAG 1998 Serious Area Particulate Plan for PM–10 for the Maricopa County Area (including Exhibit A, 5 pages), adopted on July 23, 1998.

(*3*) Ordinance Number 454; An Ordinance of the Town of Paradise Valley, Arizona, Relating to Grading and Dust Control, Amending Article 5–13 of the Town Code and Sections 5–13–1 Through 5–13–5, Providing Penalties for Violations and Severability (5 pages), adopted on January 22, 1998. [INCORPORATION NOTE: There is an error in the ordinance's title, ordinance

amended only sections 5–13–1 to 5–13–4; see section 1 of the ordinance.]

(*4*) Ordinance Number 450; An Ordinance of the Town of Paradise Valley, Arizona, Adding Section 5–1–7 to the Town Code Relating to Clean-Burning Fireplaces, Providing Penalties for Violations (3 pages), adopted on December 18, 1997.

(N) City of Peoria, Arizona.

(*1*) Resolution No. 97–37; A Resolution of the Mayor and Council of the City of Peoria, Arizona, to Implement Measures in the MAG 1997 Serious Area Particulate Plan for PM–10 and MAG 1998 Serious Area Carbon Monoxide Plan for the Maricopa County Area (including Exhibits A, 5 pages, and B, 19 pages), adopted on June 17, 1997.

(*2*) Resolution No. 97–113; A Resolution of the Mayor and Council of the City of Peoria, Arizona, to Implement Measures in the MAG 1997 Serious Area Particulate Plan for PM–10 for the Maricopa County Area and Directing the Recording of This Resolution with the Maricopa County Recorder and Declaring an Emergency (including Exhibit A, 8 pages plus index page), adopted on October 21, 1997.

(*3*) Resolution No. 98–107; A Resolution of the Mayor and Council of the City of Peoria, Arizona, to Approve and Authorize the Acceptance to Implement Measures in the MAG 1998 Serious Area Particulate Plan for PM–10 for the Maricopa County Area (including Exhibit A, 7 pages), adopted on July 21, 1998.

(O) City of Phoenix, Arizona.

(*1*) Resolution No. 18949; A Resolution Stating the City's Intent to Implement Measures to Reduce Air Pollution (including Exhibit A, 19 pages), adopted on July 2, 1997.

(*2*) Resolution No. 19006; A Resolution Stating the City's Intent to Implement Measures to Reduce Air Pollution (including Exhibit A, 13 pages), adopted on November 19, 1997.

(*3*) Ordinance No. G4037; An Ordinance Amending Chapter 39, Article 2, Section 39–7 of the Phoenix City Code by Adding Subsection G Relating to Dust Free Parking Areas; and Amending Chapter 36, Article XI, Division I, Section 36–145 of the Phoenix City Code Relating to Parking on Non-Dust Free Lots, adopted on July 2, 1997 (5 pages).

(*4*) Resolution No. 19141; A Resolution Stating the City's Intent to Implement Measures to Reduce Particulate Air Pollution (including Exhibit A, 10 pages), adopted on September 9, 1998.

(*5*) Ordinance No. G4062; An Ordinance Amending the Phoenix City Code By Adding A New Chapter 40 "Environmental Protections," By Regulating Fireplaces, Wood Stoves and Other Solid-Fuel Burning Devices and Providing that the Provisions of this Ordinance Shall Take Effect on December 31, 1998 (5 pages), adopted on December 10, 1997.

(P) Town of Queen Creek, Arizona.

(*1*) Resolution 129–97; A Resolution of the Town Council of the Town of Queen Creek, Maricopa County, Arizona to Implement Measures in the MAG 1997 Serious Area Particulate Plan for PM–10 and MAG 1998 Serious Area Carbon Monoxide Plan for the Maricopa County Area (including Exhibit A, 3 pages), adopted on June 4, 1997.

(*2*) Resolution 145–97; A Resolution of the Town Council of the Town of Queen Creek, Maricopa County, Arizona to Implement Measures in the MAG 1997 Serious Area Particulate Plan for PM–10 for the Maricopa County Area (including Exhibit A, 1 page), adopted on November 5, 1997.

(*3*) Resolution 175–98; A Resolution of the Town Council of the Town of Queen Creek, Maricopa County, Arizona to Implement Measures in the MAG 1998 Serious Area Particulate Plan for the Maricopa County Area (including Exhibit A, 9 pages), adopted on September 16, 1998.

(Q) City of Scottsdale, Arizona.

(*1*) Resolution No. 4864; A Resolution of the City of Scottsdale, Maricopa County, Arizona, To Implement Measures in the MAG 1997 Serious Area Particulate Plan for PM–10 and MAG 1998 Serious Area Carbon Monoxide Plan for the Maricopa County Area: Stating the Council's Intent to Implement Certain Control Measures Contained in that Plan (including Exhibit A, 21 pages), adopted on August 4, 1997.

(*2*) Resolution No. 4942; Resolution of the Scottsdale City Council To Implement Measures in the MAG 1997 Serious Area Particulate Plan for PM–10

for the Maricopa County Area (including Exhibit A, 13 pages), adopted on December 1, 1997.

(*3*) Resolution No. 5100; A Resolution of the City of Scottsdale, Maricopa County, Arizona, To Strengthen Particulate Dust Control and Air Pollution Measures in the Maricopa County Area (including Exhibit A, 10 pages), adopted on December 1, 1998.

(R) City of Surprise, Arizona.

(*1*) Resolution No. 97–29; A Resolution to Implement Measures in the MAG 1997 Serious Area Particulate Plan for PM–10 and MAG 1998 Serious Area Carbon Monoxide Plan for the Maricopa County Area (including Exhibit A, 4 pages), adopted on June 12, 1997.

(*2*) Resolution No. 97–67; A Resolution to Implement Measures in the MAG 1997 Serious Area Particulate Plan for PM–10 for the Maricopa County Area (including Exhibit A, 3 pages), adopted on October 23, 1997.

(*3*) Resolution No. 98–51; A Resolution to Implement Measures in the MAG 1997 Serious Area Particulate Plan for PM–10 for the Maricopa County Area (including Exhibit A, 6 pages), adopted on September 10, 1998.

(s) City of Tempe, Arizona.

(*1*) Resolution No. 97.39; Resolution to Implement Measures in the MAG 1997 Serious Area Particulate Plan for PM–10 and MAG 1998 Serious Area Carbon Monoxide Plan for the Maricopa County Area (including Exhibit A, 18 pages), adopted on June 12, 1997.

(*2*) Resolution No. 97.71, Resolution of the Council of the City of Tempe Stating Its Intent to Implement Measures in the MAG 1997 Serious Area Particulate Plan for PM–10 for the Maricopa County Area (including Exhibit A, 6 pages), adopted on November 13, 1997.

(*3*) Resolution No. 98.42, Resolution of the Council of the City of Tempe Implementing Measures in the MAG 1998 Serious Area Particulate Plan for PM–10 for the Maricopa County Area (including Exhibit A, 8 pages), adopted on September 10, 1998.

(T) City of Tolleson, Arizona.

(*1*) Resolution No. 788, A Resolution of the Mayor and City Council of the City of Tolleson, Maricopa County, Arizona, Implementing Measures in the Maricopa Association of Governments (MAG) 1997 Serious Area Particulate Plan for PM–10 and MAG 1998 Serious Area Carbon Monoxide Plan for the Maricopa County Area (including Exhibit A, 12 pages), adopted on June 10, 1997.

(*2*) Resolution No. 808, A Resolution of the Mayor and City Council of the City of Tolleson, Maricopa County, Arizona, Implementing Measures in the Maricopa Association of Governments (MAG) 1998 Serious Area Particulate Plan for PM–10 for the Maricopa County Area (including Exhibit A), adopted on July 28, 1998.

(*3*) Ordinance No. 376, N.S., An Ordinance of the City of Tolleson, Maricopa County, Arizona, Amending Chapter 7 of the Tolleson City Code by Adding a New Section 7–9, Prohibiting the Installation or Construction of a Fireplace or Wood Stove Unless It Meets the Standards Set Forth Herein (including Exhibit A, 4 pages), adopted on December 8, 1998.

(U) Town of Wickenburg, Arizona.

(*1*) Resolution No. 1308, Resolution To Implement Measures in the MAG 1997 Serious Area Particulate Plan for PM–10 and MAG 1998 Serious Area Carbon Monoxide Plan for the Maricopa County Area (including Exhibit A, 4 pages), adopted on August 18, 1997.

(V) Town of Youngtown, Arizona.

(*1*) Resolution No. 97–15, Resolution To Implement Measures in the MAG 1997 Serious Particulate Plan for PM–10 and MAG 1998 Serious Area Carbon Monoxide Plan for the Maricopa County Area (including Exhibit A, 4 pages), adopted on September 18, 1997.

(*2*) Resolution No. 98–15: Resolution To Implement Measures in the MAG 1998 Serious Area Particulate Plan for PM–10 for the Maricopa County Area (including Exhibit A, 8 pages), adopted on August 20, 1998.

(*3*) Resolution No 98–05: Resolution Stating Intent to Work Cooperatively with Maricopa County to Control the Generation of Fugitive Dust Pollution (including Exhibit A, 2 pages), adopted February 19, 1998.

(W) Maricopa County, Arizona.

(*1*) Resolution to Implement Measures in the MAG 1997 Serious Area Particulate Plan for PM–10 and MAG 1A998 Serious Area Carbon Monoxide Plan for the Maricopa County Area (including Exhibit A, 16 pages), adopted on June

25, 1997. [INCORPORATION NOTE: "1A998" error in the original.]

(*2*) Resolution to Implement Measures in the MAG 1997 Serious Area Particulate Plan for PM–10 for the Maricopa County Area (including Exhibit A, 9 pages), adopted on November 19, 1997.

(*3*) Resolution to Implement Measures in the MAG 1998 Serious Area Particulate Plan for PM–10 for the Maricopa County Area (including Exhibit A, 10 pages), adopted on February 17, 1999.

(*4*) Resolution to Implement Measures in the MAG 1999 Serious Area Particulate Plan for PM–10 for the Maricopa County Area (including Exhibit A, 10 pages), adopted on December 15, 1999.

(X) Arizona Department of Transportation, Phoenix, Arizona.

(*1*) Resolution to Implement Measures in the MAG 1997 Serious Area Particulate Plan for PM–10 and MAG 1998 Serious Area Carbon Monoxide Plan for the Maricopa County Area (including Exhibit A, 24 pages plus index page), adopted on June 20, 1997.

(*2*) Resolution to Implement Measures in the MAG 1998 Serious Area Particulate Plan for PM–10 for the Maricopa County Area (including Exhibit A, 8 pages), adopted on July 17, 1998.

(Y) Regional Public Transportation Authority, Phoenix, Arizona.

(*1*) Resolution #9701: Resolution to Implement Measures in the MAG 1997 Serious Area Particulate Plan for PM–10 and MAG 1998 Serious Area Carbon Monoxide Plan for the Maricopa County Area (including Exhibit A, 23 pages), adopted on June 12, 1997.

(Z) State of Arizona.

(*1*) Arizona Revised Statute Section 49–542(F)(7) as added in Section 31 of Arizona Senate Bill 1002, 42nd Legislative Session, 7th Special Session (1996), approved by the Governor July 18, 1996.

(101) Plan revisions submitted on March 2, 2000, by the Governor's designee.

(i) Incorporation by reference.

(A) Maricopa County Environmental Services Department.

(*1*) Rule 310 revised on February 16, 2000.

(*2*) Rule 310.01 adopted on February 16, 2000.

(*3*) Appendix C revised on February 16, 2000.

(102) Plan revisions submitted on January 8, 2002, by the Governor's designee.

(i) Incorporation by reference.

(1) Maricopa County, Arizona.

(*1*) Resolution to Update Control Measure 6 in the Revised MAG 1999 Serious Area Particulate Plan for PM–10 for the Maricopa County Area (including Exhibit A, 2 pages), adopted on December 19, 2001.

(103) The following plan was submitted on February 7, 2002, by the Governor's designee.

(i) Incorporation by reference.

(A) Arizona Department of Environmental Quality.

(1) Bullhead City Moderate Area PM_{10} Maintenance Plan and Request for Redesignation to Attainment, adopted on February 7, 2002.

(104) The following plan was submitted on March 29, 2002, by the Governor's designee.

(i) Incorporation by reference.

(A) Arizona Department of Environmental Quality.

(1) Payson Moderate Area PM_{10} Maintenance Plan and Request for Redesignation to Attainment, adopted on March 29, 2002.

(B) [Reserved]

(105) Amended rule for the following agency was submitted on March 22, 2002, by the Governor's designee.

(i) Incorporation by reference.

(A) Maricopa County Environmental Services Department.

(*1*) Rule 314, revised on December 19, 2001.

(106) Amended rule for the following agency was submitted on February 22, 2002, by the governor's designee.

(i) Incorporation by reference.

(A) Maricopa County Environmental Services Department.

(*1*) Rule 140, revised on September 5, 2001.

(107) Amended rules for the following agency were submitted on October 7, 1998 by the Governor's designee.

(i) Incorporation by reference.

(A) Pinal County Air Quality Control District.

(*1*) Rule 1–3–140, adopted on June 29, 1993 and amended on July 29, 1998.

(108) Revisions to the Arizona State Implementation Plan for the Motor Vehicle Inspection and Maintenance Programs, submitted on July 6, 2001.

(i) Incorporation by reference.

(A) Arizona Revised Statutes.

(*1*) Section 49–551 as amended in Section 27 of Arizona Senate Bill 1427, 43rd Legislature, 2nd Regular Session (1998), approved by the Governor on May 29, 1998.

(*2*) Section 49–544 as amended in Section 15 of Arizona Senate Bill 1007, 43rd Legislature, 4th Special Session (1998), approved by the Governor on May 20, 1998.

(*3*) Section 49–541 as amended in Section 44 of Arizona House Bill 2189, 44th Legislature, 1st Regular Session (1999), approved by the Governor on May 18, 1999.

(*4*) Section 49–542.01 repealed in Section 3 and Section 49–545 as amended in Section 5 of Arizona House Bill 2104, 44th Legislature, 2nd Regular session (2000), approved by the Governor on April 28, 2000.

(*5*) Section 49–542.05 as added in Section 23 of Arizona Senate Bill 1004, 44th Legislature, 7th Special Session (2000), approved by the Governor on December 14, 2000.

(B) Arizona Administrative Code.

(*1*) Title 18, Chapter 2, Article 10 (except for AAC R 18–2–1020) "Motor Vehicles; Inspection and Maintenance" as adopted on December 31, 2000.

(109) Revisions to the Arizona State Implementation Plan for the Motor Vehicle Inspection and Maintenance Programs, submitted on April 10, 2002 by the Governor's designee.

(i) Incorporation by reference.

(A) Arizona Revised Statutes.

(*1*) Section 49–542 as amended in Section 9, Section 49–543 as amended in Section 11, and Section 49–541.01 repealed in Section 29 of Arizona House Bill 2538, 45th Legislature, 1st Regular Session (2001), approved by the Governor on May 7, 2001.

(B) Arizona Administrative Code.

(*1*) Amendments to AAC R 18–2–1006 and 18–2–1019, and the repeal of AAC R 18–2–1014 and R 18–2–1015 effective January 1, 2002.

(110) New and amended regulations were submitted on July 15, 1998, by the Governor's designee.

(i) Incorporation by reference.

(A) Arizona Department of Environmental Quality.

(*1*) Rules R18–2–701, R18–2–710, R18–2–725, R18–2–727, R18–2–801, R18–2–802, R18–2–803, R18–2–804, and R18–2–805, amended on November 15, 1993.

(111) The following plan was submitted on June 18, 2002, by the Governor's designee.

(i) Incorporation by reference.

(A) Arizona Department of Environmental Quality.

(*1*) Ajo Sulfur Dioxide State Implementation and Maintenance Plan, adopted by Arizona Department of Environmental Quality on June 18, 2002.

(112) Revised regulations were submitted on August 15, 2001, by the Governor's designee as part of the submittal entitled *Arizona Cleaner Burning Gasoline Rule to Revise the State Implementation Plan for the Maricopa County Carbon Monoxide, Ozone, and PM10 Nonattainment Areas.* The incorporated materials from this submittal supercede those included in the submittals entitled *SIP Revision, Arizona Cleaner Burning Gasoline Permanent Rules—Maricopa County Ozone Nonattainment Area,* submitted on February 24, 1999, and *State Implementation Plan Revision for the Cleaner Burning Gasoline Program in the Maricopa County Ozone Nonattainment Area,* submitted on March 29, 2001.

(i) Incorporation by reference.

(A) Arizona Administrative Code.

(*1*) AAC R20–2–701, R20–2–716, R20–2–750 through 762, and Title 20, Chap. 2, Art. 7, Tables 1 and 2 (March 31, 2001).

(113) Revised statutes were submitted on January 22, 2004, by the Governor's designee as part of the submittal entitled *Supplement to Cleaner Burning Gasoline Program State Implementation Plan Revision.* The incorporated materials from this submittal supercede those included in the submittals entitled *SIP Revision, Arizona Cleaner Burning Gasoline Permanent Rules—Maricopa County Ozone Nonattainment Area,* submitted on February 24, 1999, *State Implementation Plan Revision for the Cleaner Burning Gasoline Program in the Maricopa County Ozone Nonattainment Area,* submitted on March 29, 2001, and *Arizona Cleaner Burning Gasoline Rule to Revise the State Implementation Plan for the Maricopa County Carbon Monoxide,*

Ozone, and PM10 Nonattainment Areas, submitted August 15, 2001.

(i) Incorporation by reference.

(A) Arizona Revised Statutes.

(*1*) ARS sections 49–541(1)(a), (b), and (c), 41–2124, 41–2123, 41–2113(B)(4), 41–2115, and 41–2066(A)(2) (as codified on March 31, 2001).

(114) The following plan was submitted on June 21, 2002, by the Governor's designee.

(i) Incorporation by reference.

(A) Arizona Department of Environmental Quality.

(*1*) Morenci Sulfur Dioxide Nonattainment Area State Implementation and Maintenance Plan, adopted by the Arizona Department of Environmental Quality on June 21, 2002.

[37 FR 10849, May 31, 1972]

EDITORIAL NOTE: For FEDERAL REGISTER citations affecting § 52.120, see the List of CFR Sections Affected, which appears in the Finding Aids section of the printed volume and on GPO Access.

§ 52.121 Classification of regions.

The Arizona plan is evaluated on the basis of the following classifications:

AQCR (constituent counties)	Classifications				
	PM	SO_X	NO_2	CO	O_3
Maricopa Intrastate (Maricopa)	I	III	III	I	I
Pima Intrastate (Pima)	I	II	III	III	I
Northern Arizona Intrastate (Apache, Coconino, Navajo, Yavapai)	I	III	III	III	III
Mohave-Yuma Intrastate (Mohave, Yuma)	I	III	III	III	III
Central Arizona Intrastate (Gila, Pinal)	I	IA	III	III	III
Southeast Arizona Intrastate (Cochise, Graham, Greenlee, Santa Cruz)	I	IA	III	III	III

[45 FR 67345, Oct. 10, 1980]

§ 52.122 Negative declarations.

(a) The following air pollution control districts submitted negative declarations for volatile organic compound source categories to satisfy the requirements of section 182 of the Clean Air Act, as amended. The following negative declarations are approved as additional information to the State Implementation Plan.

(1) Maricopa County Environmental Services Department.

(i) Refinery Sources (Refinery Process Turnarounds), Automobile and Light Duty Trucks, Magnet Wire, Flatwood Paneling, Pharmaceuticals and Cosmetic Manufacturing Operations, Rubber Tire Manufacturing, Polymer Manufacturing, Industrial Wastewater, Ship Building and Repair, Synthetic Organic Chemical Manufacturing Industry (SOCMI) Batch Processing, SOCMI Reactors, and SOCMI Distillation were adopted on April 26, 2000 and submitted on December 14, 2000.

(b) [Reserved]

[67 FR 54743, Aug. 26, 2002]

§ 52.123 Approval status.

(a) With the exceptions set forth in this subpart, the Administrator approved Arizona's plan for the attainment of the national standards.

(b) With the exception set forth in §§ 52.130 and 52.135, the Administrator approves the inspection and maintenance (I/M) program for motor vehicles; the carpool matching program; certain transit improvements; and certain traffic flow improvement and site-specific traffic control measures.

(c) With the exceptions set forth in this subpart, the Administrator approves the plan with respect to Part D, Title I of the Clean Air Act, as amended in 1977, for the nonattainment areas listed in this paragraph.

(1) For TSP, the portion of the Tucson TSP Air Planning Area falling both within the area described by connecting the geographic points in the order listed below in this paragraph and within the townships and sections described below in this paragraph:

Latitude 32°38.5′ N, Longitude 111°24.0′ W
Latitude 32°26.5′ N, Longitude 110°47.5′ W

Latitude 32°12.5′ N, Longitude 110°32.5′ W
Latitude 31°49.5′ N, Longitude 110°25.5′ W
Latitude 31°42.0′ N, Longitude 110°50.5′ W
Latitude 31°52.5′ N, Longitude 111°12.5′ W
Latitude 31°24.5′ N, Longitude 111°29.0′ W
(and return to initial point)

T9S, R9–11E
T10S, R9–13E
T13S, R13E: sections 5, 8–10, 13–17, 20–28, 33–36, 6 (NE and SE quarters only) and 7 (NE and SE quarters only)
T13S, R14E: sections 19–21, 26–35
T14S, R13E: sections 1–3, 10–14, 23–25
T14S, R14E: sections 3–9, 17–19, 30
T17S, R19E
T18S, R19E
T20S, R14–15E

(d) With the exceptions set forth in this subpart, the Administrator approves the plan with respect to Part D, Title I of the Clean Air Act, as amended in 1977, for the nonattainment areas listed in this paragraph. In addition, continued satisfaction of the requirements of Part D for the ozone portion of the State Implementation Plan (SIP) depends on the adoption and submittal by January 1, 1981, of reasonably available control technology (RACT) requirements for sources covered by Control Technique Guidelines (CTG's) published between January 1978 and January 1979.

(1) Maricopa County Urban Planning Area for O_3.

(e) The Administrator finds that the plan does not satisfy all the requirements of Part D, Title I, of the Clean Air Act as amended in 1977 for the nonattainment and area pollutants listed in this paragraph.

(1) Maricopa County Urban Planning Area for CO and TSP.

(2) [Reserved]

(3) The following portion of the Tucson TSP Air Planning Area: The area described by connecting the following geographic points in the order listed below:

Latitude 32°38.5′ N, Longitude 111°24.0′ W
Latitude 32°26.5′ N, Longitude 110°47.5′ W
Latitude 32°12.5′ N, Longitude 110°32.5′ W
Latitude 31°49.5′ N, Longitude 110°25.5′ W
Latitude 31°42.0′ N, Longitude 110°50.5′ W
Latitude 31°52.5′ N, Longitude 111°12.5′ W
Latitude 31°24.5′ N, Longitude 111°29.0′ W
(and return to initial point)

Excluding the area within the following townships:

T9S, R9–11E
T10S, R9–13E
T13S, R13E: sections 5, 8–10, 13–17, 20–28, 33–36, 6 (NE and SE quarters only) and 7 (NE and SE quarters only)
T13S, R14E: sections 19–21, 26–35
T14S, R13E: sections 1–3, 10–14, 23–25
T14S, R14E: sections 3–9, 17–19, 30
T17S, R19E
T18S, R19E
T20S, R14–15E

(f) Maricopa County PM–10 Nonattainment Area (Phoenix Planning Area). (1) *Plan for Attainment of the 24-hour PM–10 Standard—Maricopa County PM–10 Nonattainment Area* (May, 1997) submitted by the Arizona Department of Environmental Quality on May 7, 1997.

(i) [Reserved]

(ii) The Administrator approves the attainment and reasonable further progress demonstrations for the Maryvale PM–10 monitoring site and Salt River PM–10 monitoring site.

(iii) The approvals in paragraphs (f)(1) (i) and (ii) of this section are applicable only to the plan identified in paragraph (f)(1) of this section and do not constitute the Administrator's final decision as to the State's full compliance with the requirements of Clean Air Act sections 189(a)(1)(C) and 189(b)(1)(B) for RACM and BACM and sections 189(a)(1)(B), 189(b)(1)(A) and 189(c)(1) for attainment and reasonable further progress.

(g) Pursuant to the Federal planning authority in section 110(c) of the Clean Air Act, the Administrator finds that the applicable implementation plan for the Maricopa County ozone nonattainment area demonstrates the 15 percent VOC rate of progress required under section 182(b)(1)(A)(i).

(h) Pursuant to the federal planning authority in section 110(c) of the Clean Air Act, the Administrator finds that the applicable implementation plan for the Maricopa County PM–10 nonattainment area provides for the implementation of reasonably available control measures as required by section 189(a)(1)(C) and demonstrates attainment by the applicable attainment date as required and allowed by sections 172(c)(2) and 189(a)(1)(B).

(i) The Administrator approves the Maintenance Plan for the Tucson Air Planning Area submitted by the Arizona Department of Environmental

Quality on October 6, 1997 as meeting requirements if section 175(A) of the Clean Air Act and the requirements of EPA's Limited Maintenance Plan option. The Administrator approves the Emmisions Inventory contained in the Maintenance Plan as meeting the requirements of section 172(c)(3) of the Clean Air Act.

(j) The Administrator is approving the following elements of the Metropolitan Phoenix PM–10 Nonattainment Area Serious Area PM–10 Plan as contained in *Revised Maricopa Association of Governments 1999 Serious Area Particulate Plan for PM–10 for the Maricopa County Nonattainment Area,* February 2000, submitted February 16, 2000 and *Maricopa County PM–10 Serious Area State Implementation Plan Revision, Agricultural Best Management Practices (BMP),* ADEQ, June 2000, submitted on June 13, 2001:

(1) 1994 Base year emission inventory pursuant to Clean Air Act section 172(c)(3).

(2) The Provisions for implementing on all significant source categories reasonably available control measures (except for agricultural sources) and best available control measures for the annual and 24-hour PM–10 NAAQS pursuant to section Clean Air Act sections 189(a)(1)(c) and 189(b)(1)(b)).

(3) The demonstration of the impracticability of attainment by December 31, 2001 for the annual and 24-hour PM–10 NAAQS pursuant to Clean Air Act section 189(b)(1)(A)(ii).

(4) The demonstration of attainment by the most expeditious alternative date practicable for the annual and 24-hour PM–10 NAAQS pursuant to Clean Air Act section 189(b)(1)(A)(ii).

(5) The demonstration of reasonable further progress for the annual and 24-hour PM–10 NAAQS pursuant to Clean Air Act section 172(c)(2).

(6) The quantitative milestones for the annual and 24-hour PM–10 NAAQS pursuant to Clean Air Act section 189(c).

(7) The inclusion of the most stringent measures for the annual and 24-hour PM–10 NAAQS pursuant to Clean Air Act section 188(e).

(8) The demonstration that major sources of PM–10 precursors do not contribute significantly to violations for the annual and 24-hour PM–10 NAAQS pursuant to Clean Air Act section 189(e).

(9) The contingency measures for the annual and 24-hour PM–10 NAAQS pursuant to Clean Air Act section 172(c)(9).

(10) The transportation conformity budget for the annual and 24-hour PM–10 NAAQS pursuant to Clean Air Act section 176(c).

(11) The provisions for assuring adequate resources, personnel, and legal authority to carry out the plan for the annual and 24-hour PM–10 NAAQS pursuant to Clean Air Act section 110(a)(2)(E)(i).

(k) The Administrator approves the revised Enhanced Vehicle Inspection and Maintenance Program for the Maricopa County carbon monoxide and ozone nonattainment area submitted by the Arizona Department of Environmental Quality on July 6, 2001 and April 10, 2002 as meeting the requirements of Clean Air Act sections 182(c)(3) and 187(a)(6) and the requirements for high enhanced inspection and maintenance programs contained in 40 CFR part 51, subpart S.

[38 FR 33373, Dec. 3, 1973, as amended at 48 FR 254, Jan. 4, 1983; 51 FR 3336, Jan. 27, 1986; 51 FR 33750, Sept. 23, 1986; 62 FR 41864, Aug. 4, 1997; 63 FR 28904, May 27, 1998; 63 FR 41350, Aug. 3, 1998; 65 FR 36358, June 8, 2000; 67 FR 48739, July 25, 2002; 68 FR 2914, Jan. 22, 2003]

§ 52.124 Part D disapproval.

(a) The following portions of the Arizona SIP are disapproved because they do not meet the requirements of Part D of the Clean Air Act.

(1) The attainment demonstration, conformity and contingency portions of the 1987 Maricopa Association of Governments Carbon Monoxide Plan and 1988 Addendum.

(2) [Reserved]

(b)–(c) [Reserved]

[56 FR 5478, Feb. 11, 1991, as amended at 62 FR 41864, Aug. 4, 1997; 63 FR 41350, Aug. 3, 1998; 65 FR 36358, June 8, 2000; 67 FR 48739, July 25, 2002]

§ 52.125 Control strategy and regulations: Sulfur oxides.

(a)(1) The requirements of subpart G of this chapter are not met since the control strategy does not analyze the impact of smelter fugitive emissions on

ambient air quality (except at Hayden, Arizona) in the Central Arizona Intrastate, the Pima Intrastate, and the Southeast Arizona Intrastate (Cochise and Greenlee counties) Regions. Arizona must submit these smelter fugitive emissions control strategies to EPA by August 1, 1984. In addition, the requirements of § 51.281 of this chapter are not met since the plan does not require permanent control of fugitive smelter emissions necessary to attain and maintain the national standards for sulfur oxides. The control strategy for Hayden shows that these controls are required to attain and maintain the national standards, and the fugitive control strategy analyses required above may show that they are required for some or all of the other smelter towns in Arizona. Arizona must submit all fugitive emissions control regulations necessary to attain and maintain the national standards for sulfur oxides to EPA by August 1, 1984. Therefore, the control strategies and regulations for the six smelter areas in the Central Arizona Intrastate, the Pima Intrastate and the Southeast Arizona Intrastate (Cochise and Greenlee counties) Regions are incomplete due to Arizona's failure to address the fugitive emissions problems at copper smelters.

(2) Regulation 7–1–4.1 (copper smelters) of the Arizona Rules and Regulations for Air Pollution Control, as it pertains to existing copper smelters, is disapproved for the Central Arizona Intrastate, Pima Intrastate and Southeast Arizona Intrastate (Cochise and Greenlee counties) Regions.

(b) The requirements of subpart G and § 51.281 of this chapter are not met since the plan does not provide the degree of control necessary to attain and maintain the national standards for sulfur oxides in the Northern Arizona Intrastate Region. Th erefore, Regulation 7–1–4.2(C) (fuel burning installations) of the Arizona Rules and Regulations for Air Pollution Control, as it pertains to existing sources, is disapproved in the Northern Arizona Intrastate Region for steam power generating instal lations having a total rated capacity equal to or greater than 6,500 million B.t.u. per hour.

(c) *Replacement regulation for Regulation 7–1–4.2(C) (Fossil fuel-fired steam generators in the Northern Arizona Intrastate Region).* (1) This paragraph is applicable to the fossil fuel-fired steam generating equipment designated as Units 1, 2, and 3 at the Navajo Power Plant in the Northern Arizona Intrastate Region (§ 81.270 of this chapter).

(2) No owner or operator of the fossil fuel-fired steam generating equipment to which this paragraph is applicable shall discharge or cause the discharge of sulfur oxides into the atmosphere in excess of the amount prescribed by the following equations:

$$E = 12{,}245\ S \text{ or } e = 1{,}540\ S$$

where:

E = Allowable sulfur oxides emissions (lb./hr.) from all affected units.

e = Allowable sulfur oxides emissions (gm./sec.) from all affected units.

S = Sulfur content, in percent by weight, prior to any pretreatment of the fuel being burned.

(3) For the purposes of this paragraph:

(i) E shall not exceed 21,270 lb./hr. (2,680 gm./sec.).

(ii) If the sum of sulfur oxides emissions from Units 1, 2, and 3 would be less than 3,780 lb./hr. (475 gm./sec.) without the use of emission control equipment, the requirements of paragraphs (2), (4)(i) and (5) of this paragraph (c), shall not apply for the period of time that the emissions remain below this level.

(iii) The applicability of paragraph (c)(2)(ii) of this section may be determined through a sulfur balance utilizing the analyzed sulfur content of the fuel being burned and the total rate of fuel consumption in all affected units.

(4)(i) No owner or operator of the fossil fuel-fired steam generating equipment subject to this paragraph shall discharge or cause the discharge of sulfur oxides into the atmosphere from any affected unit in excess of the amount prescribed by the following equations, except as provided in paragraph (3)(ii) of this paragraph (c).

$$E_1 = 0.333\ E \text{ or } e_1 = 0.333\ e$$

where:

E = Allowable sulfur oxides emissions (lb./hr.) from all affected units as determined pursuant to paragraph (2) of this paragraph.

e = Allowable sulfur oxides emissions (gm./sec.) from all affected units as determined pursuant to paragraph (2) of this paragraph (c).

E_1 = Allowable sulfur oxides emissions (lb./hr.) from each affected unit.

e_1 = Allowable sulfur oxides emissions (gm./sec.) from each affected unit.

(ii) The owner or operator of the fossil fuel-fired steam generating equipment to which this paragraph is applicable may submit a request to redesignate the allowable emissions specified in paragraph (c)(4)(i) of this section. Such a request shall be submitted no later than December 2, 1974, and shall demonstrate that sulfur oxides emissions on a total plant basis will not exceed those specified in paragraphs (2) and (3)(i) of this paragraph (c). Upon receipt and evaluation of such request, the Administrator shall consider such and if appropriate, redesignate the allowable emissions specified in paragraph (c)(4)(i) of this section.

(5) All sulfur oxides control equipment at the fossil fuel-fired steam generating equipment to which this paragraph is applicable shall be operated at the maximum practicable efficiency at all times, without regard to the allowable sulfur oxides emissions, determined according to paragraph (2) or (3) of this paragraph (c), except as provided in paragraph (3)(ii) of this paragraph (c).

(6) Compliance with this paragraph shall be in accordance with the provisions of §52.134(a).

(7) The test methods and procedures used to determine compliance with this paragraph shall be those prescribed in §60.46(c)(2) and (c)(4) of this chapter. The test methods for determining the sulfur content of fuel shall be those specified in §60.45(c) and (d) of this chapter.

(d)–(e) [Reserved]

(f)(1) Paragraphs B through E of regulation 7–1–4.2 (R9–3–402) (Sulfur Emissions: Fuel Burning Installations) of the Arizona Air Pollution Control Regulations are disapproved because they could allow existing oil fired facilities to use dispersion dependent techniques alone as a means of attaining and maintaining the national ambient air quality standards. The regulation does not assure the attainment and maintenance of the national standards in a manner which is consistent with the intent of sections 110(a)(2)(B) and 123(a)(2) of the Clean Air Act.

(2) The approval of paragraphs A and F of regulation 7–1–4.2 as to coal fired facilities does not apply to the Salt River Project Agricultural Improvement and Power District-Navajo Generating Station.

(3) Paragraphs B through E of regulation 8–1–4.2 (Sulfur Emissions—Fuel Burning Installations) of the Yuma County Air Pollution Control Regulations are disapproved because they could allow existing facilities to use dispersion dependent techniques alone as a means of attaining and maintaining the National Ambient Air Quality Standards. This regulation does not assure the attainment and maintenance of the national standards in a manner which is consistent with the intent of sections 110(a)(2)(B)and 123(a)(2) of the Clean Air Act.

(g) Section 3, Regulation 3 (Sulfur from Primary Copper Smelters) of the Mohave County Health Department Air Pollution Control Regulations and Regulation 7–3–2.1 (Copper Smelters) of the Pinal-Gila Counties Air Quality Control District are disapproved since Section 36–1706 of the Arizona Revised Statutes grants exclusive jurisdiction to the Arizona Department of Health Services and the State Hearing Board over all existing copper smelters.

(1) The requirements of §51.13 of this chapter are not met since the plan does not demonstrate that the emission limitations applicable to existing fuel burning equipment producing electrical energy will provide for the attainment and maintenance of the national standards in the Pima Intrastate Region (§81.269 of this chapter).

(2) Regulation II: Rule 7A—paragraphs 2 through 5, Emission Limitations Fuel Burning Equipment—Sulfur Dioxide, of the Rules and Regulations of the Pima County Air Pollution Control District are disapproved because they could allow existing facilities to use dispersion dependent techniques along as a means of attaining and maintaining the National Ambient Air Quality Standards. The regulation does not assure the attainment and maintenance of the national standards in a manner which is consistent with the

intent of section 110(a)(2)(B) of the Clean Air Act.

[37 FR 15081, July 27, 1972]

EDITORIAL NOTE: For FEDERAL REGISTER citations affecting § 52.125, see the List of CFR Sections Affected, which appears in the Finding Aids section of the printed volume and on GPO Access.

§ 52.126 Control strategy and regulations: Particulate matter.

(a) The requirements of subpart G and § 51.281 of this chapter are not met since the plan does not provide the degree of control necessary to attain and maintain the national standards for particulate matter in Gila, Maricopa, Pima, Pinal, and Santa Cruz Counties. Therefore, Regulation 7–1–3.6 (process industries) of the Arizona Rules and Regulations for Air Pollution Control is disapproved for Gila, Maricopa, Pima, Pinal, and Santa Cruz Counties.

(b) *Replacement regulation for Regulation 7–1–3.6 of the Arizona Rules and Regulations for Air Pollution Control (Gila, Maricopa, Pima, Pinal, and Santa Cruz Counties).* (1) No owner or operator of any stationary process source in Gila, Maricopa, Pima, Pinal, or Santa Cruz County shall discharge or cause the discharge of particulate matter into the atmosphere in excess of the hourly rate shown in the following table for the process weight rate identified for such source:

[In pounds per hour]

Process weight rate	Emission rate	Process weight rate	Emission rate
50	0.36	60,000	29.60
100	0.55	80,000	31.19
500	1.53	120,000	33.28
1,000	2.25	160,000	34.85
5,000	6.34	200,000	36.11
10,000	9.73	400,000	40.35
20,000	14.99	1,000,000	46.72

(2) Paragraph (b)(1) of this section shall not apply to incinerators, fuel burning installations, or Portland cement plants having a process weight rate in excess of 250,000 lb/h.

(3) No owner or operator of a Portland cement plant in Gila, Maricopa, Pima, Pinal, or Santa Cruz County with a process weight rate in excess of 250,000 lb/hr shall discharge or cause the discharge of particulate matter into the atmosphere in excess of the amount specified in § 60.62 of this chapter.

(4) Compliance with this paragraph shall be in accordance with the provisions of § 52.134(a).

(5) The test methods and procedures used to determine compliance with this paragraph are set forth below. The methods referenced are contained in the appendix to part 60 of this chapter. Equivalent methods and procedures may be used if approved by the Administrator.

(i) For each sampling repetition, the average concentration of particulate matter shall be determined by using method 5. Traversing during sampling by method 5 shall be according to method 1. The minimum sampling time shall be 2 hours and the minimum sampling volume shall be 60 ft^3(1.70 m^3), corrected to standard conditions on a dry basis.

(ii) The volumetric flow rate of the total effluent shall be determined by using method 2 and traversing according to method 1. Gas analysis shall be performed using the integrated sample technique of method 3, and moisture content shall be determined by the condenser technique of method 4.

(iii) All tests shall be conducted while the source is operating at the maximum production or combustion rate at which such source will be operated. During the tests, the source shall burn fuels or combinations of fuels, use raw materials, and maintain process conditions representative of normal operation, and shall operate under such other relevant conditions as the Administrator shall specify.

(c) The requirements of § 51.281 of this chapter are not met since the plan does not contain regulations for Mohave and Yuma Counties in the Mohave-Yuma Intrastate Region or Pinal-Gila Counties in the Central Arizona Intrastate Region which provide enforceable and reproducible test procedures for the determination of compliance with the emission standards. Therefore paragraph C of section 3, regulation 2 (Particulates: Other Sources) of the Mohave County Air Pollution Control Regulations, paragraph B of regulation

8–1–3.6 (Particulates—Process Industries) of the Yuma County Air Pollution Control Regulations, and paragraph C of regulation 7–3–1.4 (Particulate Emissions—Incineration) and paragraph F of regulation 7–3–1.7 (Particulate Emissions—Fuel Burning Equipment) of the Rules and Regulations for Pinal-Gila Counties Air Quality Control District are disapproved.

[37 FR 15081, July 27, 1972, as amended at 38 FR 12704, May 14, 1973; 43 FR 53034, Nov. 15, 1978; 45 FR 67346, Oct. 10, 1980; 51 FR 40676, 40677, Nov. 7, 1986]

§ 52.128 Rule for unpaved parking lots, unpaved roads and vacant lots.

(a) *General.* (1) *Purpose.* The purpose of this section is to limit the emissions of particulate matter into the ambient air from human activity on unpaved parking lots, unpaved roads and vacant lots.

(2) *Applicability.* The provisions of this section shall apply to owners/operators of unpaved roads, unpaved parking lots and vacant lots and responsible parties for weed abatement on vacant lots in the Phoenix PM–10 nonattainment area. This section does not apply to unpaved roads, unpaved parking lots or vacant lots located on an industrial facility, construction, or earth-moving site that has an approved permit issued by Maricopa County Environmental Services Division under Rule 200, Section 305, Rule 210 or Rule 220 containing a Dust Control Plan approved under Rule 310 covering all unpaved parking lots, unpaved roads and vacant lots. This section does not apply to the two Indian Reservations (the Salt River Pima-Maricopa Indian Community and the Fort McDowell Mojave-Apache Indian Community) and a portion of a third reservation (the Gila River Indian Community) in the Phoenix PM–10 nonattainment area. Nothing in this definition shall preclude applicability of this section to vacant lots with disturbed surface areas due to construction, earth-moving, weed abatement or other dust generating operations which have been terminated for over eight months.

(3) The test methods described in Appendix A of this section shall be used when testing is necessary to determine whether a surface has been stabilized as defined in paragraph (b)(16) of this section.

(b) *Definitions.* (1) *Average daily trips (ADT)*—The average number of vehicles that cross a given surface during a specified 24-hour time period as determined by the Institute of Transportation Engineers Trip Generation Report (6th edition, 1997) or tube counts.

(2) *Chemical/organic stabilizer*—Any non-toxic chemical or organic dust suppressant other than water which meets any specifications, criteria, or tests required by any federal, state, or local water agency and is not prohibited for use by any applicable law, rule or regulation.

(3) *Disturbed surface area*—Any portion of the earth's surface, or materials placed thereon, which has been physically moved, uncovered, destabilized, or otherwise modified from its undisturbed natural condition, thereby increasing the potential for emission of fugitive dust.

(4) *Dust suppressants*—Water, hygroscopic materials, solution of water and chemical surfactant, foam, or non-toxic chemical/organic stabilizers not prohibited for use by any applicable law, rule or regulation, as a treatment material to reduce fugitive dust emissions.

(5) *EPA*—United States Environmental Protection Agency, Region IX, 75 Hawthorne Street, San Francisco, California 94105.

(6) *Fugitive dust*—The particulate matter entrained in the ambient air which is caused from man-made and natural activities such as, but not limited to, movement of soil, vehicles, equipment, blasting, and wind. This excludes particulate matter emitted directly from the exhaust of motor vehicles and other internal combustion engines, from portable brazing, soldering, or welding equipment, and from pile-drivers.

(7) *Lot*—A parcel of land identified on a final or parcel map recorded in the office of the Maricopa County recorder with a separate and distinct number or letter.

(8) *Low use unpaved parking lot*—A lot on which vehicles are parked no more than thirty-five (35) days a year, excluding days where the exemption in paragraph (c)(2) of this section applies.

(9) *Motor vehicle*—A self-propelled vehicle for use on the public roads and highways of the State of Arizona and required to be registered under the Arizona State Uniform Motor Vehicle Act, including any non-motorized attachments, such as, but not limited to, trailers or other conveyances which are connected to or propelled by the actual motorized portion of the vehicle.

(10) *Off-road motor vehicle*—any wheeled vehicle which is used off paved roadways and includes but is not limited to the following:

(i) Any motor cycle or motor-driven cycle;

(ii) Any motor vehicle commonly referred to as a sand buggy, dune buggy, or all terrain vehicle.

(11) *Owner/operator*—any person who owns, leases, operates, controls, maintains or supervises a fugitive dust source subject to the requirements of this section.

(12) *Paving*—Applying asphalt, recycled asphalt, concrete, or asphaltic concrete to a roadway surface.

(13) *Phoenix PM–10 nonattainment area*—such area as defined in 40 CFR 81.303, excluding Apache Junction.

(14) *PM–10*—Particulate matter with an aerodynamic diameter less than or equal to a nominal 10 micrometers as measured by reference or equivalent methods that meet the requirements specified for PM–10 in 40 CFR part 50, Appendix J.

(15) *Reasonably available control measures (RACM)*—Techniques used to prevent the emission and/or airborne transport of fugitive dust and dirt.

(16) *Stabilized surface*—(i) Any unpaved road or unpaved parking lot surface where:

(A) Any fugitive dust plume emanating from vehicular movement does not exceed 20 percent opacity as determined in section I.A of Appendix A of this section; and

(B) Silt loading (weight of silt per unit area) is less than 0.33 ounces per square foot as determined by the test method in section I.B of Appendix A of this section OR where silt loading is greater than or equal to 0.33 ounces per square foot and silt content does not exceed six (6) percent for unpaved road surfaces or eight (8) percent for unpaved parking lot surfaces as determined by the test method in section I.B of Appendix A of this section.

(ii) Any vacant lot surface with:

(A) A visible crust which is sufficient as determined in section II.1 of Appendix A of this section;

(B) A threshold friction velocity (TFV), corrected for non-erodible elements, of 100 cm/second or higher as determined in section II.2 of Appendix A of this section;

(C) Flat vegetation cover equal to at least 50 percent as determined in section II.3 of Appendix A of this section;

(D) Standing vegetation cover equal to or greater than 30 percent as determined in section II.4 of Appendix A of this section; or

(E) Standing vegetation cover equal to or greater than 10 percent as determined in section II.4 of Appendix A of this section where threshold friction velocity, corrected for non-erodible elements, as determined in section II.2 of Appendix A of this section is equal to or greater than 43 cm/second.

(17) *Unpaved parking lot*—A privately or publicly owned or operated area utilized for parking vehicles that is not paved and is not a Low use unpaved parking lot.

(18) *Unpaved road*—Any road, equipment path or driveway used by motor vehicles or off-road motor vehicles that is not paved which is open to public access and owned/operated by any federal, state, county, municipal or other governmental or quasi-governmental agencies.

(19) *Urban or suburban open area*—An unsubdivided or undeveloped tract of land adjoining a residential, industrial or commercial area, located on public or private property.

(20) *Vacant lot*—A subdivided residential, industrial, institutional, governmental or commercial lot which contains no approved or permitted buildings or structures of a temporary or permanent nature.

(c) *Exemptions.* The following requirements in paragraph (d) of this section do not apply:

(1) In paragraphs (d)(1), (d)(2) and (d)(4)(iii) of this section: Any unpaved parking lot or vacant lot 5,000 square feet or less.

(2) In paragraphs (d)(1) and (d)(2) of this section: Any unpaved parking lot

on any day in which ten (10) or fewer vehicles enter.

(3) In paragraphs (d)(4)(i) and (d)(4)(ii) of this section: Any vacant lot with less than 0.50 acre (21,780 square feet) of disturbed surface area(s).

(4) In paragraph (d) of this section: Non-routine or emergency maintenance of flood control channels and water retention basins.

(5) In paragraph (d) of this section: Vehicle test and development facilities and operations when dust is required to test and validate design integrity, product quality and/or commercial acceptance. Such facilities and operations shall be exempted from the provisions of this section only if such testing is not feasible within enclosed facilities.

(6) In paragraph (d)(4)(i) of this section: Weed abatement operations performed on any vacant lot or property under the order of a governing agency for the control of a potential fire hazard or otherwise unhealthy condition provided that mowing, cutting, or another similar process is used to maintain weed stubble at least three (3) inches above the soil surface. This includes the application of herbicides provided that the clean-up of any debris does not disturb the soil surface.

(7) In paragraph (d)(4)(i) of this section: Weed abatement operations that receive an approved Earth Moving permit under Maricopa County Rule 200, Section 305 (adopted 11/15/93).

(d) *Requirements.* (1) *Unpaved parking lots.* Any owners/operators of an unpaved parking lot shall implement one of the following RACM on any surface area(s) of the lot on which vehicles enter and park.

(i) Pave; or

(ii) Apply chemical/organic stabilizers in sufficient concentration and frequency to maintain a stabilized surface; or

(iii) Apply and maintain surface gravel uniformly such that the surface is stabilized; or

(iv) Apply and maintain an alternative control measure such that the surface is stabilized, provided that the alternative measure is not prohibited under paragraph (b)(2) or (b)(4) of this section.

(2) Any owners/operators of a low use unpaved parking lot as defined in paragraph (b)(8) of this section shall implement one of the RACM under paragraph (d)(1) of this section on any day(s) in which over 100 vehicles enter the lot, such that the surface area(s) on which vehicles enter and park is/are stabilized throughout the duration of time that vehicles are parked.

(3) *Unpaved roads.* Any owners/operators of existing unpaved roads with ADT volumes of 250 vehicles or greater shall implement one of the following RACM along the entire surface of the road or road segment that is located within the Phoenix non-attainment area by June 10, 2000:

(i) Pave; or

(ii) Apply chemical/organic stabilizers in sufficient concentration and frequency to maintain a stabilized surface; or

(iii) Apply and maintain surface gravel uniformly such that the surface is stabilized; or

(iv) Apply and maintain an alternative control measure such that the surface is stabilized, provided that the alternative measure is not prohibited under paragraph (b)(2) or (b)(4) of this section.

(4) *Vacant lots.* The following provisions shall be implemented as applicable.

(i) *Weed abatement.* No person shall remove vegetation from any vacant lot by blading, disking, plowing under or any other means without implementing all of the following RACM to prevent or minimize fugitive dust.

(A) Apply a dust suppressant(s) to the total surface area subject to disturbance immediately prior to or during the weed abatement.

(B) Prevent or eliminate material track-out onto paved surfaces and access points adjoining paved surfaces.

(C) Apply a dust suppressant(s), gravel, compaction or alternative control measure immediately following weed abatement to the entire disturbed surface area such that the surface is stabilized.

(ii) *Disturbed surfaces.* Any owners/operators of an urban or suburban open area or vacant lot of which any portion has a disturbed surface area(s) that remain(s) unoccupied, unused, vacant or

undeveloped for more than fifteen (15) calendar days shall implement one of the following RACM within sixty (60) calendar days following the disturbance.

(A) Establish ground cover vegetation on all disturbed surface areas in sufficient quantity to maintain a stabilized surface; or

(B) Apply a dust suppressant(s) to all disturbed surface areas in sufficient quantity and frequency to maintain a stabilized surface; or

(C) Restore to a natural state, i.e. as existing in or produced by nature without cultivation or artificial influence, such that all disturbed surface areas are stabilized; or

(D) Apply and maintain surface gravel uniformly such that all disturbed surface areas are stabilized; or

(E) Apply and maintain an alternative control measure such that the surface is stabilized, provided that the alternative measure is not prohibited under paragraph (b)(2) or (b)(4) of this section.

(iii) *Motor vehicle disturbances.* Any owners/operators of an urban or suburban open area or vacant lot of which any portion has a disturbed surface area due to motor vehicle or off-road motor vehicle use or parking, notwithstanding weed abatement operations or use or parking by the owner(s), shall implement one of the following RACM within 60 calendar days following the initial determination of disturbance.

(A) Prevent motor vehicle and off-road motor vehicle trespass/ parking by applying fencing, shrubs, trees, barriers or other effective measures; or

(B) Apply and maintain surface gravel or chemical/organic stabilizer uniformly such that all disturbed surface areas are stabilized.

(5) *Implementation date of RACM.* All of the requirements in paragraph (d) of this section shall be effective eight (8) months from September 2, 1998. For requirements in paragraph (d)(4)(ii) and (d)(4)(iii) of this section, RACM shall be implemented within eight (8) months from September 2, 1998, or within 60 calendar days following the disturbance, whichever is later.

(e) *Monitoring and records.* (1) Any owners/operators that are subject to the provisions of this section shall compile and retain records that provide evidence of control measure application, indicating the type of treatment or measure, extent of coverage and date applied. For control measures involving chemical/organic stabilization, records shall also indicate the type of product applied, vendor name, label instructions for approved usage, and the method, frequency, concentration and quantity of application.

(2) Copies of control measure records and dust control plans along with supporting documentation shall be retained for at least three years.

(3) *Agency surveys.* (i) EPA or other appropriate entity shall conduct a survey of the number and size (or length) of unpaved roads, unpaved parking lots, and vacant lots subject to the provisions of this section located within the Phoenix PM–10 nonattainment area beginning no later than 365 days from September 2, 1998.

(ii) EPA or other appropriate entity shall conduct a survey at least every three years within the Phoenix PM–10 nonattainment area beginning no later than 365 days from September 2, 1998, which includes:

(A) An estimate of the percentage of unpaved roads, unpaved parking lots, and vacant lots subject to this section to which RACM as required in this section have been applied; and

(B) A description of the most frequently applied RACM and estimates of their control effectiveness.

APPENDIX A TO § 52.128—TEST METHODS TO DETERMINE WHETHER A SURFACE IS STABILIZED

I. Unpaved Roads and Unpaved Parking Lots

A. Opacity Observations

Conduct opacity observations in accordance with Reference Method 9 (40 CFR Part 60, appendix A) and Methods 203A and 203C of this appendix, with opacity readings taken at five second observation intervals and two consecutive readings per plume beginning with the first reading at zero seconds, in accordance with Method 203C, sections 2.3.2. and 2.4.2 of this appendix. Conduct visible opacity tests only on dry unpaved surfaces (i.e. when the surface is not damp to the touch) and on days when average wind speeds do not exceed 15 miles per hour (mph).

(i) Method 203A—Visual Determination of Opacity of Emissions From Stationary Sources for Time-Arranged Regulations

Method 203A is virtually identical to EPA's Method 9 (40 CFR Part 60 Appendix A) except for the data-reduction procedures, which provide for averaging times other than 6 minutes. That is, using Method 203A with a 6-minute averaging time would be the same as following EPA Method 9 (40 CFR Part 60, Appendix A). Additionally, Method 203A provides procedures for fugitive dust applications. The certification procedures provided in section 3 are virtually identical to Method 9 (40 CFR Part 60, Appendix A) and are provided here, in full, for clarity and convenience.

1. Applicability and Principle

1.1 Applicability. This method is applicable for the determination of the opacity of emissions from sources of visible emissions for time-averaged regulations. A time-averaged regulation is any regulation that requires averaging visible emission data to determine the opacity of visible emissions over a specific time period.

1.2 Principle. The opacity of emissions from sources of visible emissions is determined visually by an observer qualified according to the procedures of section 3.

2. Procedures

An observer qualified in accordance with section 3 of this method shall use the following procedures for visually determining the opacity of emissions.

2.1 Procedures for Emissions from Stationary Sources. These procedures are not applicable to this section.

2.2 Procedures for Fugitive Process Dust Emissions. These procedures are applicable for the determination of the opacity of fugitive emissions by a qualified observer. The qualified field observer should do the following:

2.2.1 Position. Stand at a position at least 5 meters from the fugitive dust source in order to provide a clear view of the emissions with the sun oriented in the 140-degree sector to the back. Consistent as much as possible with maintaining the above requirements, make opacity observations from a position such that the line of vision is approximately perpendicular to the plume and wind direction. As much as possible, if multiple plumes are involved, do not include more than one plume in the line of sight at one time.

2.2.2 Field Records. Record the name of the plant or site, fugitive source location, source type [pile, stack industrial process unit, incinerator, open burning operation activity, material handling (transfer, loading, sorting, etc.)], method of control used, if any, observer's name, certification data and affiliation, and a sketch of the observer's position relative to the fugitive source. Also, record the time, estimated distance to the fugitive source location, approximate wind direction, estimated wind speed, description of the sky condition (presence and color of clouds), observer's position relative to the fugitive source, and color of the plume and type of background on the visible emission observation form when opacity readings are initiated and completed.

2.2.3 Observations. Make opacity observations, to the extent possible, using a contrasting background that is perpendicular to the line of vision. For roads, storage piles, and parking lots, make opacity observations approximately 1 meter above the surface from which the plume is generated. For other fugitive sources, make opacity observations at the point of greatest opacity in that portion of the plume where condensed water vapor is not present. For intermittent sources, the initial observation should begin immediately after a plume has been created above the surface involved. Do not look continuously at the plume but, instead, observe the plume momentarily at 15-second intervals.

2.3 Recording Observations. Record the opacity observations to the nearest 5 percent every 15 seconds on an observational record sheet. Each momentary observation recorded represents the average opacity of emissions for a 15-second period.

2.4 Data Reduction for Time-Averaged Regulations. A set of observations is composed of an appropriate number of consecutive observations determined by the averaging time specified. Divide the recorded observations into sets of appropriate time lengths for the specified averaging time. Sets must consist of consecutive observations; however, observations immediately preceding and following interrupted observations shall be deemed consecutive. Sets need not be consecutive in time and in no case shall two sets overlap, resulting in multiple violations. For each set of observations, calculate the appropriate average opacity.

3. Qualification and Testing

3.1 Certification Requirements. To receive certification as a qualified observer, a candidate must be tested and demonstrate the ability to assign opacity readings in 5 percent increments to 25 different black plumes and 25 different white plumes, with an error not to exceed 15 percent opacity on any one reading and an average error not to exceed 7.5 percent opacity in each category. Candidates shall be tested according to the procedures described in paragraph 3.2. Any smoke generator used pursuant to paragraph 3.2 shall be equipped with a smoke meter which meets the requirements of paragraph 3.3. Certification tests that do not meet the

requirements of paragraphs 3.2 and 3.3 are not valid.

The certification shall be valid for a period of 6 months, and after each 6-month period, the qualification procedures must be repeated by an observer in order to retain certification.

3.2 Certification Procedure. The certification test consists of showing the candidate a complete run of 50 plumes, 25 black plumes and 25 white plumes, generated by a smoke generator. Plumes shall be presented in random order within each set of 25 black and 25 white plumes. The candidate assigns an opacity value to each plume and records the observation on a suitable form. At the completion of each run of 50 readings, the score of the candidate is determined. If a candidate fails to qualify, the complete run of 50 readings must be repeated in any retest. The smoke test may be administered as part of a smoke school or training program, and may be preceded by training or familiarization runs of the smoke generator during which candidates are shown black and white plumes of known opacity.

3.3 Smoke Generator Specifications. Any smoke generator used for the purpose of paragraph 3.2 shall be equipped with a smoke meter installed to measure opacity across the diameter of the smoke generator stack. The smoke meter output shall display in-stack opacity, based upon a path length equal to the stack exit diameter on a full 0 to 100 percent chart recorder scale. The smoke meter optical design and performance shall meet the specifications shown in Table A. The smoke meter shall be calibrated as prescribed in paragraph 3.3.1 prior to conducting each smoke reading test. At the completion of each test, the zero and span drift, shall be checked, and if the drift exceeds ±1 percent opacity, the condition shall be corrected prior to conducting any subsequent test runs. The smoke meter shall be demonstrated at the time of installation to meet the specifications listed in Table A. This demonstration shall be repeated following any subsequent repair or replacement of the photocell or associated electronic circuitry including the chart recorder or output meter, or every 6 months, whichever occurs first.

3.3.1 Calibration. The smoke meter is calibrated after allowing a minimum of 30 minutes warm-up by alternately producing simulated opacity of 0 percent and 100 percent. When stable response at 0 percent or 100 percent is noted, the smoke meter is adjusted to produce an output of 0 percent or 100 percent, as appropriate. This calibration shall be repeated until stable 0 percent and 100 percent readings are produced without adjustment. Simulated 0 percent and 100 percent opacity values may be produced by alternately switching the power to the light source on and off while the smoke generator is not producing smoke.

3.3.2 Smoke Meter Evaluation. The smoke meter design and performance are to be evaluated as follows:

3.3.2.1 Light Source. Verify from manufacturer's data and from voltage measurements made at the lamp, as installed, that the lamp is operated within ±5 percent of the nominal rated voltage.

3.3.2.2 Spectral Response of Photocell. Verify from manufacturer's data that the photocell has a photopic response; i.e., the spectral sensitivity of the cell shall closely approximate the standard spectral-luminosity curve for photopic vision which is referenced in (b) of Table A.

3.3.2.3 Angle of View. Check construction geometry to ensure that the total angle of view of the smoke plume, as seen by the photocell, does not exceed 15 degrees. Calculate the total angle of view as follows:

$$\varphi_v = 2 \tan^{-1} d/2L$$

Where:

φ_v = total angle of view;
d = the photocell diameter + the diameter of the limiting aperture; and
L = distance from the photocell to the limiting aperture.

The limiting aperture is the point in the path between the photocell and the smoke plume where the angle of view is most restricted. In smoke generator smoke meters, this is normally an orifice plate.

3.3.2.4 Angle of Projection. Check construction geometry to ensure that the total angle of projection of the lamp on the smoke plume does not exceed 15 degrees. Calculate the total angle of projection as follows:

$$\varphi_P = 2 \tan^{-1} d/2L$$

Where:

φ_P = total angle of projection;
d = the sum of the length of the lamp filament + the diameter of the limiting aperture; and
L = the distance from the lamp to the limiting aperture.

3.3.2.5 Calibration Error. Using neutral-density filters of known opacity, check the error between the actual response and the theoretical linear response of the smoke meter. This check is accomplished by first calibrating the smoke meter according to 3.3.1 and then inserting a series of three neutral-density filters of nominal opacity of 20, 50, and 75 percent in the smoke meter path length. Use filters calibrated within ±2 percent. Care should be taken when inserting the filters to prevent stray light from affecting the meter. Make a total of five nonconsecutive readings for each filter. The maximum opacity error on any one reading shall be ±3 percent.

3.3.2.6 Zero and Span Drift. Determine the zero and span drift by calibrating and operating the smoke generator in a normal manner over a 1-hour period. The drift is measured by checking the zero and span at the end of this period.

3.3.2.7 Response Time. Determine the response time by producing the series of five simulated 0 percent and 100 percent opacity values and observing the time required to reach stable response. Opacity values of 0 percent and 100 percent may be simulated by alternately switching the power to the light source off and on while the smoke generator is not operating.

4. References

1. U.S. Environmental Protection Agency. Standards of Performance for New Stationary Sources; appendix A; Method 9 for Visual Determination of the Opacity of Emissions from Stationary Sources. Final Rule. 39 FR 219. Washington, DC. U.S. Government Printing Office. November 12, 1974.

2. Office of Air and Radiation. "Quality Assurance Guideline for Visible Emission Training Programs." EPA–600/S4–83–011. Quality Assurance Division. Research Triangle Park, N.C. May 1982.

3. "Method 9—Visible Determination of the Opacity of Emissions from Stationary Sources." February 1984. Quality Assurance Handbook for Air Pollution Measurement Systems. Volume III, section 3.1.2. Stationary Source Specific Methods. EPA–600–4–77–027b. August 1977. Office of Research and Development Publications, 26 West Clair Street, Cincinnati, OH.

4. Office of Air Quality Planning and Standards. "Opacity Error for Averaging and Nonaveraging Data Reduction and Reporting Techniques." Final Report–SR–1–6–85. Emission Measurement Branch, Research Triangle Park, N.C. June 1985.

5. The U.S. Environmental Protection Agency. Preparation, Adoption, and Submittal of State Implementation Plans. Methods for Measurement of PM_{10} Emissions from Stationary Sources. Final Rule. FEDERAL REGISTER. Washington, DC. U.S. Government Printing Office. Volumes 55. No. 74. pps. 14246–14279. April 17, 1990.

(ii) Method 203C—Visual Determination of Opacity of Emissions From Stationary Sources for Instantaneous Limitation Regulations

Method 203C is virtually identical to EPA's Method 9 (40 CFR Part 60, Appendix A), except for the data-reduction procedures which have been modified for application to instantaneous limitation regulations. Additionally, Method 203C provides procedures for fugitive dust applications which were unavailable when Method 9 was promulgated. The certification procedures in section 3 are identical to Method 9. These certification procedures are provided in Method 203A as well, and, therefore, have not been repeated in this method.

1. Applicability and Principle

1.1 Applicability. This method is applicable for the determination of the opacity of emissions from sources of visible emissions for instantaneous limitations. An instantaneous limitation regulation is an opacity limit which is never to be exceeded.

1.2 Principle. The opacity of emissions from sources of visible emissions is determined visually by a qualified observer.

2. Procedures

The observer qualified in accordance with section 3 of this method shall use the following procedures for visually determining the opacity of emissions.

2.1 Procedures for Emissions From Stationary Sources. Same as 2.1, Method 203A.

2.1.1 Position. Same as 2.1.1, Method 203A.

2.1.2 Field Records. Same as 2.1.2, Method 203A.

2.1.3 Observations. Make opacity observations at the point of greatest opacity in that portion of the plume where condensed water vapor is not present.

Do not look continuously at the plume. Instead, observe the plume momentarily at the interval specified in the subject regulation. Unless otherwise specified, a 15-second observation interval is assumed.

2.1.3.1 Attached Steam Plumes. Same as 2.1.3.1, Method 203A.

2.1.3.2 Detached Steam Plumes. Same as 2.1.3.2, Method 203A.

2.2 Procedures for Fugitive Process Dust Emissions.

2.2.1 Position. Same as section 2.2.1, Method 203A.

2.2.2 Field Records. Same as section 2.2.2, Method 203A.

2.2.3 Observations.

2.2.3.1 Observations for a 15-second Observation Interval Regulations. Same as section 2.2.3, Method 203A.

2.2.3.2 Observations for a 5-second Observation Interval Regulations. Same as section 2.2.3, Method 203A, except, observe the plume momentarily at 5-second intervals.

2.3 Recording Observations. Record opacity observations to the nearest 5 percent at the prescribed interval on an observational record sheet. Each momentary observation recorded represents the average of emissions for the prescribed period. If a 5-second observation period is not specified in the applicable regulation, a 15-second interval is assumed. The overall time for which recordings are made shall be of a length appropriate to the regulation for which opacity is being measured.

2.3.1 Recording Observations for 15-second Observation Interval Regulations. Record opacity observations to the nearest 5 percent at 15-second intervals on an observational record sheet. Each momentary observation recorded represents the average of emissions for a 15-second period.

2.3.2 Recording Observations for 5-second Observation Interval Regulations. Record opacity observations to the nearest 5 percent at 5-second intervals on an observational record sheet. Each momentary observation recorded represents the average of emissions for 5-second period.

2.4 Data Reduction for Instantaneous Limitation Regulations. For an instantaneous limitation regulation, a 1-minute averaging time will be used. Divide the observations recorded on the record sheet into sets of consecutive observations. A set is composed of the consecutive observations made in 1 minute. Sets need not be consecutive in time, and in no case shall two sets overlap. Reduce opacity observations by dividing the sum of all observations recorded in a set by the number of observations recorded in each set.

2.4.1 Data Reduction for 15-second Observation Intervals. Reduce opacity observations by averaging four consecutive observations recorded at 15-second intervals. Divide the observations recorded on the record sheet into sets of four consecutive observations. For each set of four observations, calculate the average by summing the opacity of the four observations and dividing this sum by four.

2.4.2 Data Reduction for 5-second Observation Intervals. Reduce opacity observations by averaging 12 consecutive observations recorded at 5-second intervals. Divide the observations recorded on the record sheet into sets of 12 consecutive observations. For each set of 12 observations, calculate the average by summing the opacity of the 12 observations and dividing this sum by 12.

3. Qualification and Test

Same as section 3, Method 203A.

TABLE A—SMOKE METER DESIGN AND PERFORMANCE SPECIFICATIONS

Parameter	Specification
a. Light Source	Incandescent lamp operated at nominal rated voltage.
b. Spectral response of photocell	Photopic (daylight spectral response of the human eye—Reference 4.1 of section 4.)
c. Angle of view	15 degrees maximum total angle
d. Angle of projection	15 degrees maximum total angle.
e. Calibration error	±3 percent opacity, maximum.
f. Zero and span drift	±1 percent opacity, 30 minutes.
g. Response time	≤5 seconds.

B. Silt Content

Conduct the following test method to determine the silt loading and silt content of unpaved road and unpaved parking lot surfaces.

(i) Collect a sample of loose surface material from an area 30 cm by 30 cm (1 foot by 1 foot) in size to a depth of approximately 1 cm or until a hard subsurface is reached, whichever occurs first. Use a brush and dustpan or other similar device. Collect the sample from a routinely-traveled portion of the surface which receives a preponderance of vehicle traffic, i.e. as commonly evidenced by tire tracks. Conduct sweeping slowly so that fine surface material is not released into the air. Only collect samples from surfaces that are not wet or damp due to precipitation or dew.

(ii) Obtain a shallow, lightweight container and a scale with readings in half ounce increments or less. Place the scale on a level surface and zero it with the weight of the empty container. Transfer the entire sample collected to the container, minimizing escape of particles into the air. Weigh the sample and record its weight.

(iii) Obtain and stack a set of sieves with the following openings: 4 mm, 2 mm, 1 mm, 0.5 mm, and 0.25 mm. Place the sieves in order according to size openings beginning with the largest size opening at the top. Place a collector pan underneath the bottom (0.25 mm) sieve. Pour the entire sample into the top sieve, minimizing escape of particles into the air by positioning the sieve/collector pan unit in an enclosed or wind barricaded area. Cover the sieve/collector pan unit with a lid. Shake the covered sieve/collector pan unit vigorously for a period of at least one (1) minute in both the horizontal and vertical planes. Remove the lid from the sieve/collector pan unit and disassemble each sieve separately beginning with the largest sieve. As each sieve is removed, examine it for a complete separation of material in order to ensure that all material has been sifted to the finest sieve through which it can pass. If not, reassemble and cover the sieve/collector pan unit and shake it for period of at least one (1) minute. After disassembling the sieve/collector pan unit, transfer the material which is captured in the collector pan into the lightweight container originally used to collect and weigh

the sample. Minimize escape of particles into the air when transferring the material into the container. Weigh the container with the material from the collector pan and record its weight. Multiply the resulting weight by 0.38 if the source is an unpaved road or by 0.55 if the source is an unpaved parking lot to estimate silt loading. Divide by the total sample weight and multiply by 100 to arrive at the percent silt content.

(iv) As an alternative to conducting the procedure described above in section I.B.(ii) and section I.B.(iii) of this appendix, the sample (collected according to section I.B.(i) of this appendix) may be taken to an independent testing laboratory or engineering facility for silt loading (*e.g.* net weight < 200 mesh) and silt content analysis according to the following test method from "Procedures For Laboratory Analysis Of Surface/Bulk Dust Loading Samples", (Fifth Edition, Volume I, Appendix C.2.3 "Silt Analysis", 1995), AP–42, Office of Air Quality Planning & Standards, U.S. Environmental Protection Agency, Research Triangle Park, North Carolina.

1. Objective—Several open dust emission factors have been found to be correlated with the silt content(< 200 mesh) of the material being disturbed. The basic procedure for silt content determination is mechanical, dry sieving. For sources other than paved roads, the same sample which was oven-dried to determine moisture content is then mechanically sieved.

2.1 Procedure—Select the appropriate 20-cm (8-in.) diameter, 5-cm (2-in.) deep sieve sizes.

Recommended U. S. Standard Series sizes are 3/8 in., No. 4, No. 40, No. 100, No. 140, No. 200, and a pan. Comparable Tyler Series sizes can also be used. The No. 20 and the No. 200 are mandatory. The others can be varied if the recommended sieves are not available, or if buildup on 1 particulate sieve during sieving indicates that an intermediate sieve should be inserted.

2.2 Obtain a mechanical sieving device, such as a vibratory shaker or a Roto-Tap δ[1] without the tapping function.

2.3 Clean the sieves with compressed air and/or a soft brush. Any material lodged in the sieve openings or adhering to the sides of the sieve should be removed, without handling the screen roughly, if possible.

2.4 Obtain a scale (capacity of at least 1600 grams [g] or 3.5 lb) and record make, capacity, smallest division, date of last calibration, and accuracy. (See Figure A)

2.5 Weigh the sieves and pan to determine tare weights. Check the zero before every weighing. Record the weights.

2.6 After nesting the sieves in decreasing order of size, and with pan at the bottom, dump dried laboratory sample (preferably immediately after moisture analysis) into the top sieve. The sample should weigh between ¢ 400 and 1600 g (¢ 0.9 and 3.5 lb). This amount will vary for finely textured materials, and 100 to 300 g may be sufficient when 90% of the sample passes a No. 8 (2.36 mm) sieve. Brush any fine material adhering to the sides of the container into the top sieve and cover the top sieve with a special lid normally purchased with the pan.

2.7 Place nested sieves into the mechanical sieving device and sieve for 10 minutes (min). Remove pan containing minus No. 200 and weigh. Repeat the sieving at 10-min intervals until the difference between 2 successive pan sample weighings (with the pan tare weight subtracted) is less than 3.0%. Do not sieve longer than 40 min.

2.8 Weigh each sieve and its contents and record the weight. Check the zero before every weighing.

2.9 Collect the laboratory sample. Place the sample in a separate container if further analysis is expected.

2.10 Calculate the percent of mass less than the 200 mesh screen (75 micrometers [μm]). This is the silt content.

Figure A. Example silt analysis form.

Silt Analysis

Dated: _____
By: _____
Sample No: _____ Sample Weight (after drying)
Material: _____
Pan + Sample: _____
Pan: _____
Split Sample Balance: _____
Dry Sample: _____
Make _____ Capacity: _____
Smallest Division _____
Final Weight _____
% Silt = [Net Weight <200 Mesh] ÷ [Total Net Weight × 100] =___%

SIEVING

Time: Start:	Weight (Pan Only)
Initial (Tare):	
10 min:	
20 min:	
30 min:	
40 min:	

[1] CFR part 60, App. A, Meth. 5, 2.1.2, footnote 2.

Screen	Tare weight (screen)	Final weight (screen + sample)	Net weight (sample)	%
⅜ in.				
4 mesh.				
10 mesh.				
20 mesh.				
40 mesh.				
100 mesh.				
140 mesh.				
200 mesh.				
Pan.				

(v) The silt loading and percent silt content for any given unpaved road surface or unpaved parking lot surface shall be based on the average of at least three (3) samples that are representative of routinely-traveled portions of the road or parking lot surface. In order to simplify the sieve test procedures in section I.B.(ii) and section I.B.(iii) of this appendix, the three samples may be combined as long as all material is sifted to the finest sieve through which it can pass, each sample weighs within 1 ounce of the other two samples, and the combined weight of the samples and unit area from which they were collected is calculated and recorded accurately.

II. Vacant Lots

The following test methods shall be used for determining whether a vacant lot, or portion thereof, has a stabilized surface.

Should a disturbed vacant lot contain more than one type of disturbance, soil, vegetation or other characteristics which are visibly distinguishable, test each representative surface for stability separately in random areas according to the test methods in section II. of this appendix and include or eliminate it from the total size assessment of disturbed surface area(s) depending upon test method results. A vacant lot surface shall be considered stabilized if any of the test methods in section II. of this appendix indicate that the surface is stabilized such that the conditions defined in paragraph (b)(16)(ii) of this section are met:

1. Visible Crust Determination

(i) Where a visible crust exists, drop a steel ball with a diameter of 15.9 millimeters (0.625 inches) and a mass ranging from 16 to 17 grams from a distance of 30 centimeters (one foot) directly above (at a 90 degree angle perpendicular to) the soil surface. If blowsand is present, clear the blowsand from the surfaces on which the visible crust test method is conducted. Blowsand is defined as thin deposits of loose uncombined grains covering less than 50 percent of a vacant lot which have not originated from the representative vacant lot surface being tested. If material covers a visible crust which is not blowsand, apply the test method in section II.2 of this appendix to the loose material to determine whether the surface is stabilized.

(ii) A sufficient crust is defined under the following conditions: once a ball has been dropped according to section II.1.(i) of this appendix, the ball does not sink into the surface so that it is partially or fully surrounded by loose grains and, upon removing the ball, the surface upon which it fell has not been pulverized so that loose grains are visible.

(iii) Conduct three tests, dropping the ball once per test, within a survey area the size of one foot by one foot. The survey area shall be considered sufficiently crusted if at least two out of three tests meet the definition in section II.1.(ii) of this appendix. Select at least two other survey areas that represent the disturbed surface area and repeat this procedure. Whether a sufficient crust covers the disturbed surface area shall be based on a determination that all of the survey areas tested are sufficiently crusted.

(iv) At any given site, the existence of a sufficient crust covering one portion of a disturbed surface may not represent the existence or protectiveness of a crust on another disturbed surface(s). Repeat the visible crust test as often as necessary on each representative disturbed surface area for an accurate assessment of all disturbed surfaces at a given site.

2. Determination of Threshold Friction Velocity (TFV)

For disturbed surface areas that are not crusted or vegetated, determine threshold friction velocity (TFV) according to the following sieving field procedure (based on a 1952 laboratory procedure published by W. S. Chepil).

(i) Obtain and stack a set of sieves with the following openings: 4 millimeters (mm), 2 mm, 1 mm, 0.5 mm, and 0.25 mm. Place the sieves in order according to size openings beginning with the largest size opening at the top. Place a collector pan underneath the bottom (0.25 mm) sieve. Collect a sample of loose surface material from an area at least 30 cm by 30 cm in size to a depth of approximately 1 cm using a brush and dustpan or other similar device. Only collect soil samples from dry surfaces (i.e. when the surface

is not damp to the touch). Remove any rocks larger than 1 cm in diameter from the sample. Pour the sample into the top sieve (4 mm opening) and cover the sieve/collector pan unit with a lid. Minimize escape of particles into the air when transferring surface soil into the sieve/collector pan unit. Move the covered sieve/collector pan unit by hand using a broad, circular arm motion in the horizontal plane. Complete twenty circular arm movements, ten clockwise and ten counterclockwise, at a speed just necessary to achieve some relative horizontal motion between the sieves and the particles. Remove the lid from the sieve/collector pan unit and disassemble each sieve separately beginning with the largest sieve. As each sieve is removed, examine it for loose particles. If loose particles have not been sifted to the finest sieve through which they can pass, reassemble and cover the sieve/collector pan unit and gently rotate it an additional ten times. After disassembling the sieve/collector pan unit, slightly tilt and gently tap each sieve and the collector pan so that material aligns along one side. In doing so, minimize escape of particles into the air. Line up the sieves and collector pan in a row and visibly inspect the relative quantities of catch in order to determine which sieve (or whether the collector pan) contains the greatest volume of material. If a visual determination of relative volumes of catch among sieves is difficult, use a graduated cylinder to measure the volume. Estimate TFV for the sieve catch with the greatest volume using Table 1, which provides a correlation between sieve opening size and TFV.

TABLE 1 (METRIC UNITS)—DETERMINATION OF THRESHOLD FRICTION VELOCITY (TFV)

Tyler Sieve No.	Opening (mm)	TFV (cm/s)
5	4	>100
10	2	100
18	1	76
35	0.5	58
60	0.25	43
Collector Pan	.....	30

Collect at least three (3) soil samples which are representative of the disturbed surface area, repeat the above TFV test method for each sample and average the resulting TFVs together to determine the TFV uncorrected for non-erodible elements.

(ii) Non-erodible elements are distinct elements on the disturbed surface area that are larger than one (1) cm in diameter, remain firmly in place during a wind episode and inhibit soil loss by consuming part of the shear stress of the wind. Non-erodible elements include stones and bulk surface material but do not include flat or standing vegetation. For surfaces with non-erodible elements, determine corrections to the TFV by identifying the fraction of the survey area, as viewed from directly overhead, that is occupied by non-erodible elements using the following procedure. Select a survey area of one (1) meter by 1 meter. Where many non-erodible elements lie on the disturbed surface area, separate them into groups according to size. For each group, calculate the overhead area for the non-erodible elements according to the following equations:

(Average length) × (Average width) = Average Dimensions *Eq. 1*

(Average Dimensions) × (Number of Elements) = Overhead Area *Eq. 2*

Overhead Area of Group 1 + Overhead Area of Group 2 (etc.) = Total Overhead Area *Eq. 3*

Total Overhead Area/2 = Total Frontal Area *Eq. 4*

(Total Frontal Area/Survey Area) × 100 = Percent Cover of Non-erodible Elements *Eq. 5*

(Ensure consistent units of measurement, e.g. square meters or square inches when calculating percent cover.)

Repeat this procedure on an additional two (2) distinct survey areas representing a disturbed surface and average the results. Use Table 2 to identify the correction factor for the percent cover of non-erodible elements. Multiply the TFV by the corresponding correction factor to calculate the TFV corrected for non-erodible elements.

TABLE 2—CORRECTION FACTORS FOR THRESHOLD FRICTION VELOCITY

Percent cover of non-erodible elements	Correction factor
≥10%	5
≥5% and < 10%	3
< 5% and ≥ 1%	2
< 1%	None.

3. Determination of Flat Vegetation Cover

Flat vegetation includes attached (rooted) vegetation or unattached vegetative debris lying on the surface with a predominant horizontal orientation that is not subject to movement by wind. Flat vegetation which is dead but firmly attached shall be considered equally protective as live vegetation. Stones or other aggregate larger than one centimeter in diameter shall be considered protective cover in the course of conducting the line transect method. Where flat vegetation exists, conduct the following line transect method.

(i) Stretch a one-hundred (100) foot measuring tape across a disturbed surface area. Firmly anchor both ends of the measuring tape into the surface using a tool such as a screwdriver with the tape stretched taut and close to the soil surface. If vegetation exists in regular rows, place the tape diagonally (at approximately a 45 degree angle) away from

a parallel or perpendicular position to the vegetated rows. Pinpoint an area the size of a 3/32 inch diameter brazing rod or wooden dowel centered above each one-foot interval mark along one edge of the tape. Count the number of times that flat vegetation lies directly underneath the pinpointed area at one-foot intervals. Consistently observe the underlying surface from a 90 degree angle directly above each pinpoint on one side of the tape. Do not count the underlying surface as vegetated if any portion of the pinpoint extends beyond the edge of the vegetation underneath in any direction. If clumps of vegetation or vegetative debris lie underneath the pinpointed area, count the surface as vegetated unless bare soil is visible directly below the pinpointed area. When 100 observations have been made, add together the number of times a surface was counted as vegetated. This total represents the percent of flat vegetation cover (e.g. if 35 positive counts were made, then vegetation cover is 35 percent). If the disturbed surface area is too small for 100 observations, make as many observations as possible. Then multiply the count of vegetated surface areas by the appropriate conversion factor to obtain percent cover. For example, if vegetation was counted 20 times within a total of 50 observations, divide 20 by 50 and multiply by 100 to obtain a flat vegetation cover of 40 percent.

(ii) Conduct the above line transect test method an additional two (2) times on areas representative of the disturbed surface and average results.

4. Determination of Standing Vegetation Cover

Standing vegetation includes vegetation that is attached (rooted) with a predominant vertical orientation. Standing vegetation which is dead but firmly rooted shall be considered equally protective as live vegetation. Conduct the following standing vegetation test method to determine if 30 percent cover or more exists. If the resulting percent cover is less than 30 percent but equal to or greater than 10 percent, then conduct the Threshold Friction Velocity test in section II.2 of this appendix in order to determine whether the disturbed surface area is stabilized according to paragraph (b)(16)(ii)(E) of this section.

(i) For standing vegetation that consists of large, separate vegetative structures (for example, shrubs and sagebrush), select a survey area representing the disturbed surface that is the shape of a square with sides equal to at least ten (10) times the average height of the vegetative structures. For smaller standing vegetation, select a survey area of three (3) feet by 3 feet.

(ii) Count the number of standing vegetative structures within the survey area. Count vegetation which grows in clumps as a single unit. Where different types of vegetation exists and/or vegetation of different height and width exists, separate the vegetative structures with similar dimensions into groups. Count the number of vegetative structures in each group within the survey area. Select an individual structure within each group that represents the average height and width of the vegetation in the group. If the structure is dense (i.e. when looking at it vertically from base to top there is little or zero open air space within its perimeter), calculate and record its frontal silhouette area according to Equation 6 of this appendix. Also use Equation 6 if the survey area is larger than nine square feet, estimating the average height and width of the vegetation. Otherwise, use the procedure in section II.4.(iii) of this appendix to calculate the Frontal Silhouette Area. Then calculate the percent cover of standing vegetation according to Equations 7, 8 and 9 of this appendix. (Ensure consistent units of measurement, e.g. square feet or square inches when calculating percent cover.)

(iii) Vegetative Density Factor. Cut a single, representative piece of vegetation (or consolidated vegetative structure) to within 1 cm of surface soil. Using a white paper grid or transparent grid over white paper, lay the vegetation flat on top of the grid (but do not apply pressure to flatten the structure). Grid boxes of one inch or one half inch squares are sufficient for most vegetation when conducting this procedure. Using a marker or pencil, outline the shape of the vegetation along its outer perimeter according to Figure B, C or D of this appendix, as appropriate. (NOTE: Figure C differs from Figure D primarily in that the width of vegetation in Figure C is narrow at its base and gradually broadens to its tallest height. In Figure D, the width of the vegetation generally becomes narrower from its midpoint to its tallest height.) Remove the vegetation and count and record the total number of gridline intersections within the outlined area, but do not count gridline intersections that connect with the outlined shape. There must be at least 10 gridline intersections within the outlined area and preferably more than 20, otherwise, use smaller grid boxes. Draw small circles (no greater than a 3/32 inch diameter) at each gridline intersection counted within the outlined area. Replace the vegetation on the grid within its outlined shape. From a distance of approximately two feet directly above the grid, observe each circled gridline intersection. Count and record the number of circled gridline intersections that are not covered by any piece of the vegetation. To calculate percent vegetative density, use Equations 10 and 11 of this appendix. If percent vegetative density is equal to or greater than 30, use the equation (Eq. 14, 15 or 16) that matches the outline used to trace the vegetation (Figure B, C or D) to calculate its Frontal Silhouette Area. If percent vegetative density is less

than 30, use Equations 12 and 13 of this appendix to calculate the Frontal Silhouette Area.

(iv) Within a disturbed surface area that contains multiple types of vegetation with each vegetation type uniformly distributed, results of the percent cover associated with the individual vegetation types may be added together.

(v) Repeat this procedure on an additional two (2) distinct survey areas representing the disturbed surface and average the results.

Height × Width = Frontal Silhouette Area *Eq. 6*

(Frontal Silhouette Area of Individual Vegetative Structure) × Number of Vegetation Structures Per Group = Group Frontal Silhouette Area of Group *Eq. 7*

Frontal Silhouette Area of Group 1 + Frontal Silhouette Area of Group 2 (etc.) = Total Frontal Silhouette Area *Eq. 8*

(Total Frontal Silhouette Area/Survey Area) × 100 = Percent Cover of Standing Vegetation *Eq. 9*

[(Number of circled gridlines within the outlined area counted that are not covered by vegetation / Total number of gridline intersections within the outlined area) × 100] = Percent Open Space *Eq. 10*

100 = Percent Open Space = Percent Vegetative Density *Eq. 11*

Percent Vegetative Density/100 = Vegetative Density *Eq. 12*

$$[\text{Max. Height} * \text{Width}] * \left[\frac{\text{Vegetative Density}}{0.4}\right]^{0.5} = \text{Frontal Silhouette Area} \qquad \text{Eq. 13}$$

Figure B

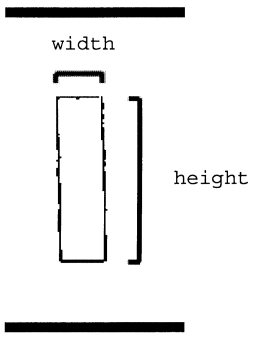

Cylinder:

Frontal Silhouette Area =

maximum (max.) height X max. width

Eq. 14

Figure C

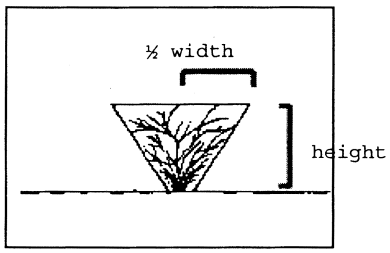

Inverted Cone:

Frontal Silhouette Area =

max. height X ½ max. width

Eq. 15

Figure D

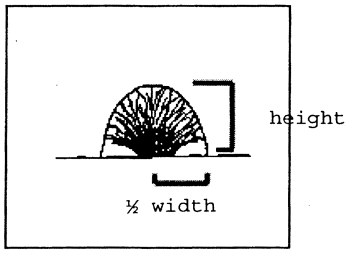

Upper Sphere:

Frontal Silhouette Area =

(3.14 X max. height X ½ max. width)/2

Eq. 16

Alternative Test Methods

Alternative test methods may be used upon obtaining the written approval of the EPA.

[64 FR 71308, Dec. 21, 1999]

§ 52.129 Review of new sources and modifications.

(a) [Reserved]

(b) *National standards not met.* The requirements of § 51.160(a) of this chapter are not met in the Pima Intrastate Region since the Rules and Regulations of the Pima County Air Pollution Control

District are not adequate to prevent construction or modification of a source which would interfere with the attainment or maintenance of the national standards.

(c) *Regulation for review of new sources and modifications.* (1) The requirements of this paragraph are applicable to any stationary source in the Pima Intrastate Region (§ 81.269 of this chapter), the construction or modification of which iscommenced after the effective date of this regulation.

(2) No owner or operator shall commence construction or modification of any new source after the effective date of this regulation without first obtaining approval from the Administrator of the location of such source.

(i) Application for approval to construct or modify shall be made on forms furnished by the Administrator, or by other means prescribed by the Administrator.

(ii) A separate application is required for each source.

(iii) Each application shall be signed by the applicant.

(iv) Each application shall be accompanied by site information, stack data, and the nature and amount of emissions. Such information shall be sufficient to enable the Administrator to make any determination pursuant to paragraph (c)(3) of this section.

(v) Any additional information, plans, specifications, evidence or documentation that the Administrator may require shall be furnished upon request.

(3) No approval to construct or modify will be granted unless the applicant shows to the satisfaction of the Administrator that the source will not prevent or interfere with attainment or maintenance of any national standard.

(4)(i) Within twenty (20) days after receipt of an application to construct, or any addition to such application, the Administrator shall advise the owner or operator of any deficiency in the information submitted in support of the application. In the event of such a deficiency, the date of receipt of the application for the purpose of paragraph (c)(4)(ii) of this section, shall be the date on which all required information is received by the Administrator.

(ii) Within thirty (30) days after receipt of a complete application, the Administrator shall:

(*a*) Make a preliminary determination whether the source should be approved, approved with conditions, or disapproved.

(*b*) Make available in at least one location in each region in which the proposed source would be constructed, a copy of all materials submitted by the owner or operator, a copy of the Administrator's preliminary determination and a copy or summary of other materials, if any, considered by the Administrator in making his preliminary determination; and

(*c*) Notify the public, by prominent advertisement in a newspaper of general circulation in each region in which the proposed source would be constructed, of the opportunity for written public comment on the information submitted by the owner or operator and the Administrator's preliminary determination on the approvability of the source.

(iii) A copy of the notice required pursuant to this paragraph shall be sent to the applicant and to state and local air pollution control agencies, having cognizance over the location where the source will be situated.

(iv) Public comments submitted in writing within thirty (30) days after the date such information is made available shall be considered by the Administrator in making his final decision on the application. No later than ten (10) days after the closeof the public comment period, the applicant may submit a written response to any comment submitted by the public. The Administrator shall consider the applicant's response in making his final decision. All comments shall be made available for public inspection in at least one location in the region in which the source would be located.

(v) The Administrator shall take final action on an application within thirty (30) days after the close of the public comment period. The Administrator shall notify the applicant in writing of his approval, conditional approval, or denial of the application, and

shall set forth his reasons for conditional approval or denial. Such notification shall be made available for public inspection in at least one location in the region in which the source would be located.

(vi) The Administrator may extend each of the time periods specified in paragraph (c)(4) (ii), (iv) or (v) of this section by no more than 30 days, or such other period as agreed to by the applicant and the Administrator.

(5) The Administrator may cancel an approval if the construction is not begun within 2 years from the date of issuance, or if during the construction, work is suspended for 1 year.

(6) Approval to construct or modify shall not relieve any owner or operator of the responsibility to comply with any local, State or Federal regulation which is part of the applicable plan.

(7) Approval to construct or modify shall not be required for:

(i) The installation or alteration of an air pollutant detector, air pollutants recorder, combustion controller, or combustion shutoff.

(ii) Airconditioning or ventilating systems not designed to remove air pollutants generated by or released from equipment.

(iii) Fuel burning equipment, other than smokehouse generators, which has a heat input of not more than 250 MBtu/h (62.5 billion g-cal/h) and burns only gaseous fuel containing not more than 20.0 grain H_2 S per 100 stdft^3 (45.8 g/100 stdm^3); has a heat input of not more than 1 MBtu/h (250 Mg-cal/h) and burns only distillate oil; or has a heat input of not more than 350,000 Btu/h (88.2 Mg-cal/h) and burns any other fuel.

(iv) Mobile internal combustion engines.

(v) Laboratory equipment used exclusively for chemical or physical analysis.

(vi) Other sources of minor significance specified by the Administrator.

(8) Any owner or operator who constructs, modifies, or operates a stationary source not in accordance with the application, as approved and conditioned by the Administrator, or any owner or operator of a stationary source subject to this paragraph who commences construction or modification without applying for and receiving approval hereunder, shall be subject to enforcement action under section 113 of the Act.

(d) *Regulation for review of new sources and modifications: Federal Regulations.* (1) This requirement is applicable to any stationary source subject to the requirements of § 52.126(b), the construction or modification of which is commenced after the effective date of this regulation.

(2) No owner or operator shall commence construction or modification of any stationary source after the effective date of this regulation, without first obtaining approval from the Administrator of the location and design of such source.

(i) Application for approval to construct or modify shall be made on forms furnished by the Administrator, or by other means prescribed by the Administrator.

(ii) A separate application is required for each source.

(iii) Each application shall be signed by the applicant.

(iv) Each application shall be accompanied by site information, plans, descriptions, specifications, and drawings showing the design of the source, the nature and amount of emissions, and the manner in which it will be operated and controlled.

(v) Any additional information, plans, specifications, evidence, or documentation that the Administrator may require shall be furnished upon request.

(3) No approval to construct or modify will be granted unless the applicant shows to the satisfaction of the Administrator that the source will operate without causing a violation of § 52.126(b).

(4)(i) Within twenty (20) days after receipt of an application to construct, or any addition to such application, the Administrator shall advise the owner or operator of any deficiency in the information submitted in support of the application. In the event of such a deficiency, the date of receipt of the application for the purpose of paragraph (d)(4)(ii) of this section, shall be the date on which all required information is received by the Administrator.

(ii) Within thirty (30) days after receipt of a complete application, the Administrator shall:

(*a*) Make a preliminary determination whether the source should be approved, approved with conditions, or disapproved.

(*b*) Make available in at least one location in each region in which the proposed source would be constructed, a copy of all materials submitted by the owner or operator, a copy of the Administrator's preliminary determination and a copy or summary of other materials, if any, considered by the Administrator in making his preliminary determination; and

(*c*) Notify the public, by prominent advertisement in a newspaper of general circulation in each region in which the proposed source would be constructed, of the opportunity for written public comment on the information submitted by the owner or operator and the Administrator's preliminary determination on the approvability of the source.

(iii) A copy of the notice required pursuant to this paragraph shall be sent to the applicant and to state and local air pollution control agencies, having cognizance over the location where the source will be situated.

(iv) Public comments submitted in writing within thirty (30) days after the date such information is made available shall be considered by the Administrator in making his final decision on the application. No later than ten (10) days after the close of the public comment period, the applicant may submit a written response to any comment submitted by the public. The Administrator shall consider the applicant's response in making his final decision. All comments shall be made available for public inspection in at least one location in the region in which the source would be located.

(v) The Administrator shall take final action on an application within thirty (30) days after the close of the public comment period. The Administrator shall notify the applicant in writing of his approval, conditional approval, or denial of the application, and shall set forth his reasons for conditional approval or denial. Such notification shall be made available for public inspection in at least one location in the region in which the source would be located.

(vi) The Administrator may extend each of the time periods specified in paragraph (d)(4)(ii), (iv) or (v) of this section by no more than 30 days, or such other period as agreed to by the applicant and the Administrator.

(5) The Administrator may impose any reasonable conditions upon an approval including conditions requiring the source to be provided with:

(i) Sampling ports of a size, number, and location as the Administrator may require,

(ii) Safe access to each port,

(iii) Instrumentation to monitor and record emission data, and

(iv) Any other sampling and testing facilities.

(6) The Administrator may cancel an approval if the construction is not begun within 2 years from the date of issuance, or if during the construction, work is suspended for 1 year.

(7) Any owner or operator subject to the provisions of this regulation shall furnish the Administrator written notification as follows:

(i) A notification of the anticipated date of initial startup of source not more than 60 days or less than 30 days prior to such date.

(ii) A notification of the actual date of initial startup of a source within 15 days after such date.

(8) Within 60 days after achieving the maximum production rate at which the source will be operated but not later than 180 days after initial startup of such source, the owner or operator of such source shall conduct a performance test(s) in accordance with the methods and under operating conditions approved by the Administrator and furnish the Administrator a written report of the results of such performance test.

(i) Such test shall be at the expense of the owner or operator.

(ii) The Administrator may monitor such test and also may conduct performance tests.

(iii) The owner or operator of a source shall provide the Administrator 15 days prior notice of the performance test to afford the Administrator the

opportunity to have an observer present.

(iv) The Administrator may waive the requirement for performance tests if the owner or operator of a source has demonstrated by other means to the Administrator's satisfaction that the source is being operated in compliance with the requirements of § 52.126(b).

(9) Approval to construct or modify shall not relieve the owner or operator of the responsibility to comply with all local, State, or Federal regulations which are part of the applicable plan.

(10) Approval to construct or modify shall not be required for:

(i) The installation or alteration of an air pollutant detector, air pollutants recorder, combustion controller, or combustion shutoff.

(ii) Air-conditioning or ventilating systems not designed to remove air pollutants generated by or released from equipment.

(iii) Fuel burning equipment, other than smokehouse generators, which has a heat input of not more than 250 MBtu/h (62.5 billion g-cal/h) and burns only gaseous fuel containing not more than 20.0 grain H_2 S per 100 stdft^3 (45.8 g/100 stdm^3); has a heat input of not more than 1 MBtu/h (250 Mg-cal/h) and burns only distillate oil; or has a heat input of not more than 350,000 Btu/h (88.2 Mg-cal/h) and burns any other fuel.

(iv) Mobile internal combustion engines.

(v) Laboratory equipment used exclusively for chemical or physical analyses.

(vi) Other sources of minor significance specified by the Administrator.

(11) Any owner or operator who constructs, modifies, or operates a stationary source not in accordance with the application, as approved and conditioned by the Administrator, or any owner or operator of a stationary source subject to this paragraph who commences construction or modification without applying for and receiving approval hereunder, shall be subject to enforcement action under section 113 of the Act.

(e) *Delegation of authority*. (1) The Administrator shall have the authority to delegate responsibility for implementing the procedures for conducting source review pursuant to this section in accordance with paragraphs (g) (2), (3), and (4) of this section.

(2) Where the Administrator delegates the responsibility for implementing the procedures for conducting source review pursuant to this section to any Agency, other than a Regional Office of the Environmental Protection Agency, a copy of the notice pursuant to paragraphs (c)(4)(iii) and (d)(4)(iii) of this section shall be sent to the Administrator through the appropriate Regional Office.

(3) In accordance with Executive Order 11752, the Administrator's authority for implementing the procedures for conducting source review pursuant to this section shall not be delegated, other than to a Regional Office of the Environmental Protection Agency, for new or modified sources which are owned or operated by the Federal government or for new or modified sources located on Federal lands; except that, with respect to the latter category, where new or modified sources are constructed or operated on Federal lands pursuant to leasing or other Federal agreements, the Federal Land Manager may at his discretion, to the extent permissible under applicable statutes and regulations, require the lessee or permittee to be subject to new source review requirements which have been delegated to a state or local agency pursuant to this paragraph.

(4) The Administrator's authority for implementing the procedures for conducting source review pursuant to this section shall not be redelegated, other than to a Regional Office of the Environmental Protection Agency, for new or modified sources which are located in Indian reservations except where the State has assumed jurisdiction over such land under other laws, in which case the Administrator may delegate his authority to the States in accordance with paragraphs (g)(2), (3), and (4) of this section.

[37 FR 15081, July 27, 1972, as amended at 38 FR 12705, May 14, 1973; 39 FR 7279, Feb. 25, 1974; 39 FR 28285, Aug. 8, 1974; 40 FR 50268, Oct. 29, 1975; 45 FR 67346, Oct. 10, 1980; 51 FR 40677, Nov. 7, 1986; 60 FR 33922, June 29, 1995]

§ 52.130 Source surveillance.

(a) The requirements of § 51.211 of this chapter are not met since the plan does not contain legally enforceable procedures for requiring sources in the Northern Arizona, Mohave-Yuma, Central Arizona, and Southeast Arizona Intrastate Regions to maintain records of and periodically report on the nature and amounts of emissions.

(b) The requirements of § 51.213 of this chapter are not met because the plan does not provide procedures for obtaining and maintaining data on actual emission reductions achieved as a result of implementing transportation control measures.

(c) *Regulation for source recordkeeping and reporting.* (1) The owner or operator of any stationary source in the Northern Arizona, Mohave-Yuma, Central Arizona, or Southeast Arizona Intrastate Region (§§ 81.270, 81.268, 81.271, and 81.272 of this chapter) shall, upon notification from the Administrator, maintain records of the nature and amounts of emissions from such source or any other information as may be deemed necessary by the Administrator to determine whether such source is in compliance with applicable emission limitations or other control measures.

(2) The information recorded shall be summarized and reported to the Administrator, and shall be submitted within 45 days after the end of the reporting period. Reporting periods are January 1 to June 30 and July 1 to December 31, except that the initial reporting period shall commence on the date the Administrator issues notification of the recordkeeping requirements.

(3) Information recorded by the owner or operator and copies of the summarizing reports submitted to the Administrator shall be retained by the owner or operator for 2 years after the date on which the pertinent report is submitted.

(4) Emission data obtained from owners or operators of stationary sources will be correlated with applicable emission limitations and other control measures. All such emission data will be available during normal business hours at the regional office (region IX). The Administrator will designate one or more places in Arizona where such emission data and correlations will be available for public inspection.

(d) The requirements of § 51.214 of this chapter are not met since the plan does not contain legally enforceable procedures for requiring certain stationary sources subject to emission standards to install, calibrate, operate, and maintain equipment for continuously monitoring and recording emissions, and to provide other information as specified in Appendix P of part 51 of this chapter.

(e) The requirements of § 51.214 of this chapter are not met since the plan does not provide sufficient regulations to meet the minimum specifications of Appendix P in the Maricopa Intrastate Region. Additionally, Maricopa County Air Pollution Control Regulation IV, rule 41, paragraph B, sections 6.0–6.4 (Special Consideration) is disapproved since it does not contain the specific criteria for determining those physical limitations or extreme economic situations where alternative monitoring requirements would be applicable.

[37 FR 15081, July 27, 1972]

EDITORIAL NOTE: For FEDERAL REGISTER citations affecting § 52.130, see the List of CFR Sections Affected, which appears in the Finding Aids section of the printed volume and on GPO Access.

§§ 52.131–52.132 [Reserved]

§ 52.133 Rules and regulations.

(a) Regulation 7–1–1.4(A) (Exceptions) of the Arizona Rules and Regulations for Air Pollution Control, regulations 12–3–2 (Emission Standards) of the Coconino County Rules and Regulations for Air Pollution Control, section 3, regulation 5 (Exceptions) of the Mohave County Air Pollution Control Regulations, regulation 8–1–1.6 (Exceptions) of the Yuma County Air Pollution Control Regulations, and regulation 7–1–2.8 (Exceptions) of the Rules and Regulations for Pinal-Gila Counties Air Quality Control District all provide for an exemption from enforcement action if the violation is attributable to certain events. These events are too broad in scope and the source can obtain the exemption merely by reporting the occurrence. Therefore, the above regulations are disapproved

since these regulations make all approved emission limiting regulations potentially unenforceable.

(b) Paragraph E of regulation 7–1–1.3 (R9–3–103) (Air Pollution Prohibited) prohibits any person from causing ground level concentrations to exceed ambient standards outside the boundaries of this operation. This regulation could allow violations of ambient air quality standards to occur in areas to which the public has access, contrary to the requirements of section 110(a)(1) of the Clean Air Act. Therefore, paragraph E of regulation 7–1–1.3 (R9–3–103) of the Arizona Rules and Regulations for Air Pollution Control is disapproved.

(c) The requirements of subpart G and § 51.281 of this chapter are not met since the plan does not provide any enforceable regulations and a demonstration that such regulations will cause the attainment and maintenance of national ambient air quality standards in Graham and Greenlee Counties.

(d) Section 3, regulation 4 (Ground Level Concentrations) of the Mohave County Air Pollution Control Regulations, paragraph E of regulation 8–1–1.3 (Air Pollution Prohibited) of the Yuma County Air Pollution Control Regulations, and paragraph C of regulation 7–1–1.3 (Air Pollution Prohibited) of the Rules and Regulations for Pinal-Gila Counties Air Quality Control District prohibits any person from causing ground level concentrations to exceed ambient standards outside the boundaries of hisoperation. These regulations could allow violations of ambient air quality standards to occur in areas to which the general public has access, contrary to the requirements of section 110(a)(1) of the Clean Air Act. Therefore, these regulations are disapproved.

(e) Rule R18–2–702 of the Arizona Department of Environmental Quality Rules and Regulations sets an opacity standard for emissions from stationary sources of PM–10. The standard does not fulfill the RACM/RACT requirements of section 189(a) of the CAA. The rule also does not comply with enforceability requirements of section 110(a) and SIP relaxation requirements of sections 110(l) and 193. Therefore, Rule R18–2–702 submitted on July 15, 1998 is disapproved.

(f) Rules 1–3–130 and 3–1–020 submitted on November 27, 1995 of the Pinal County Air Quality Control District regulations have limited enforceability because they reference rules not contained in the Arizona State Implementation Plan. Therefore, these rules are removed from the Arizona State Implementation Plan.

(g) Rules 1–2–110, 1–3–130, 3–1–020, and 4–1–010 submitted on October 7, 1998 of the Pinal County Air Quality Control District regulations have limited enforceability because they reference rules not contained in the Arizona State Implementation Plan. Therefore, these rules are disapproved.

[37 FR 15082, July 27, 1972, as amended at 43 FR 33247, July 31, 1978; 43 FR 53035, Nov. 15, 1978; 51 FR 40676, 40677, Nov. 7, 1986; 67 FR 59460, Sept. 23, 2002; 67 FR 68767, Nov. 13, 2002]

§ 52.134 Compliance schedules.

(a) *Federal compliance schedule.* (1) Except as provided in paragraph (a)(2) of this section, the owner or operator of any stationary source subject to § 52.126(b) shall comply with such regulation on or before January 31, 1974. The owner or operator of the source subject to § 52.125(c) shall comply with such regulation at initial start-up of such source unless a compliance schedule has been submitted pursuant to paragraph (a)(2) of this section.

(i) Any owner or operator in compliance with § 52.126(b) on the effective date of this regulation shall certify such compliance to the Administrator no later than 120 days following the effective date of this paragraph.

(ii) Any owner or operator who achieves compliance with § 52.125(c) or § 52.126(b) after the effective date of this regulation shall certify such compliance to the Administrator within 5 days of the date compliance is achieved.

(2) Any owner or operator of the stationary source subject to § 52.125(c) and paragraph (a)(1) of this section may, no later than July 23, 1973, submit to the Administrator for approval a proposed compliance schedule that demonstrates compliance with § 52.125(c) as expeditiously as practicable but not later than July 31, 1977. Any owner or operator of a stationary source subject to § 52.126(b) and paragraph (a)(1) of this

section may, no later than 120 days following the effective date of this paragraph, submit to the Administrator for approval a proposed compliance schedule that demonstrates compliance with § 52.126(b) as expeditiously as practicable but not later than July 31, 1975.

(i) The compliance schedule shall provide for periodic increments of progress toward compliance. The dates for achievement of such increments shall be specified. Increments of progress shall include, but not be limited to: Submittal of the final control plan to the Administrator; letting of necessary contracts for construction or process change, or issuance of orders for the purchase of component parts to accomplish emission control equipment or process modification; completion of onsite construction or installation of emission control equipment or process modification; and final compliance.

(ii) Any compliance schedule for the stationary source subject to § 52.125(c) which extends beyond July 31, 1975, shall apply any reasonable interim measures of control designed to reduce the impact of such source on public health.

(3) Any owner or operator who submits a compliance schedule pursuant to this paragraph shall, within 5 days after the deadline for each increment of progress, certify to the Administrator whether or not the required increment of the approved compliance schedule has been met.

[38 FR 12705, May 14, 1973, as amended at 39 FR 10584, Mar. 21, 1974; 39 FR 43277, Dec. 12, 1974; 40 FR 3994, Jan. 27, 1975; 54 FR 25258, June 14, 1989]

§ 52.135 Resources.

(a) The requirements of § 51.280 of this chapter are not met because the transportation control plan does not contain a sufficient description of resources available to the State and local agencies and of additional resources needed to carry out the plan during the 5-year period following submittal.

[38 FR 16564, June 22, 1973, as amended at 51 FR 40677, Nov. 7, 1986]

§ 52.136 Control strategy for ozone: Oxides of nitrogen.

EPA is approving an exemption request submitted by the State of Arizona on April 13, 1994 for the Maricopa County ozone nonattainment area from the NO_X RACT requirements contained in section 182(f) of the Clean Air Act. This approval exempts the Phoenix area from implementing the NO_X requirements for RACT, new source review (NSR), and the applicable general and transportation conformity and inspection and maintenance (I/M) requirements of the CAA. The exemption is based on Urban Airshed Modeling as lasts for only as long as the area's modeling continues to demonstrate attainment without NO_X reductions from major stationary sources.

[60 FR 19515, Apr. 19, 1995]

§ 52.137 [Reserved]

§ 52.138 Conformity procedures.

(a) *Purpose.* The purpose of this regulation is to provide procedures as part of the Arizona carbon monixide implementation plans for metropolitan transportation planning organizations (MPOs) to use when determining conformity of transportationplans, programs, and projects. Section 176(c) of the Clean Air Act (42 U.S.C. 7506(c)) prohibits MPOs from approving any project, program, or plan which does not conform to an implementation plan approved or promulgated under section 110.

(b) *Definitions.*

(1) *Applicable implementation plan* or *applicable plan* means the portion (or portions) of the implementation plan, or most recent revision thereof, which has been approved under section 110 of the Clean Air Act, 42 U.S.C. 7410, or promulgated under section 110(c) of the CAA, 42 U.S.C. 7410(c).

(2) *Carbon monoxide national ambient air quality standard (CO NAAQS)* means the standards for carbon monoxide promulgated by the Administrator under section 109, 42 U.S.C. 7409, of the Clean Air Act and found in 40 CFR 50.8

(3) *Cause* means resulting in a violation of the CO NAAQS in an area which previously did not have ambient CO concentrations above the CO NAAQS.

(4) *Contribute* means resulting in measurably higher average 8-hour ambient CO concentrations over the NAAQS or an increased number of violations of the NAAQS in an area which currently experiences CO levels above the standard.

(5) *Metropolitan planning organization (MPO)* means the organization designated under 23 U.S.C. 134 and 23 CFR part 450.106. For the specific purposes of this regulation, MPO means either the Maricopa Association of Governments or the Pima Association of Governments.

(6) *Nonattainment area* means for the specific purpose of this regulation either the Pima County carbon monoxide nonattainment area as described in 40 CFR 81.303 or the Maricopa County carbon monoxide nonattainment area as described in 40 CFR 81.303 (i.e., the MAG urban planning area).

(7) *Transportation control measure (TCM)* means any measure in an applicable implementation plan which is intended to reduce emissions from transportation sources.

(8) *Transportation improvement program (TIP)* means the staged multiyear program of transportation improvements including an annual (or biennial) element which is required in 23 CFR part 450.

(9) *Unified planning work program* or *UPWP* means the program required by 23 CFR 450.108(c) and endorsed by the metropolitan planning organization which describes urban transportation and transportation-related planning activities anticipated in the area during the next 1- to 2-year period including the planning work to be performed with federal planning assistance and with funds available under the Urban Mass Transportation Act (49 U.S.C.) section 9 or 9A. UPWPs are also known as overallwork programs or OWPs.

(c) *Applicability*. These procedures shall apply only to the Maricopa Association of Governments in its role as the designated metropolitan planning organization for Maricopa County, Arizona, and the Pima Association of Governments in its role as the designated metropolitan planning organization for Pima County, Arizona.

(d) *Procedures*— (1) *Transportation Plans and Transportation Improvement Programs*— (i) *Documentation*. The MPO shall prepare for each transportation plan and program (except for the unified planning work program), as part of the plan or program, a report documenting for each plan and program the following information:

(A) the disaggregated population projections and employment which were assumed in:

(*1*) the applicable plan, and

(*2*) the transportation plan/program;

(B) the levels of vehicle trips, vehicle miles traveled, and congestion that were:

(*1*) assumed in the applicable plan, and

(*2*) expected to result from the implementation of the plan/program over the period covered by the applicable plan considering any growth likely to result from the implementation of the plan/program;

(C) for each major transportation control measure in the applicable implementation plan;

(*1*) the TCM's implementation schedule and, if determined in the applicable plan, expected effectiveness in reducing CO emissions,

(*2*) the TCM's current implementation status and, if feasible, its current effectiveness in reducing CO emissions, and

(*3*) actions in the plan/program which may beneficially or adversely affect the implementation and/or effectiveness of the TCM;

(D) the CO emission levels resulting from the implementation of the plan/program over the period covered by the applicable plan considering any growth likely to result from the implementation of the plan/program; and

(E) the ambient CO concentration levels, micro-scale and regional, resulting from the implementation of the plan/program over the period covered by the applicable plan considering any growth likely to result from the implementation of the plan or program.

(ii) *Findings*. Prior to approving a transportation plan/program, the MPO shall determine if the plan/program conforms to the applicable implementation plan. In making this determination, the MPO shall make and support each of the following findings for each transportation plan and program using

the information documented in paragraph (d)(1)(i) of this section:

(A) that implementation of the transportation plan/program will provide for the implementation of TCMs in the applicable plan on the schedule set forth in the applicable plan;

(B) that CO emission levels, microscale and regional, resulting from the implementation of the plan/program will not delay attainment or achievement of any interim emission reductions needed for attainment and/or interfere with maintenance of the CONAAQS throughout the nonattainment area during the period covered by the applicable plan; and

(C) that implementation of the plan/program would not cause or contribute to a violation of the CO NAAQS anywhere within the nonattainment area during the period covered by the applicable plan.

(2) *Amendments to a Transportation Plan or Transportation Implementation Program.* Prior to approving any amendment to a transportation plan or program, the MPO shall first determine that the amendment does not substantially change the information provided under paragraph (d)(1)(i) of this section and does not change the findings in paragraph (d)(1)(ii) of this section with respect to the original plan or program.

(3) *Transportation Projects.* As part of any individual transportation project approval made by the MPO, the MPO shall determine whether the project conforms to the applicable implementation plan using the following procedure:

(i) For projects from a plan and TIP that has been found to conform under procedures in paragraph (d)(1) of this section within the last three years or from a Plan or TIP amendment that has been found to conform under procedures in paragraph (d)(2) of this section in the past three years, the MPO shall document as part of the approval document:

(A) the TIP project number;

(B) whether the project is an exempt project as defined in paragraph (e) of this section; and

(C) whether the design and scope of the project has changed significantly from the design and scope of the project as described in the conforming TIP:

(*1*) If the design and scope of the project has not changed significantly, the MPO may find the project conforming; or

(*2*) If the design and scope of the project has changed significantly or the design and scope of the project could not be determined from the TIP, the MPO shall use the procedures in paragraph (d)(3)(ii) of this section to determine if the project conforms to the applicable implementation plan.

(ii) For projects not exempted under paragraph (e) of this section and not in a plan or a TIP that has been found to conform under procedures in paragraph (d)(1) of this section within the last three years:

(A) *Documentation.* The MPO shall document as part of the approval document for each such project:

(*1*) the disaggregated population and employment projections, to the extent they are used in

(*i*) the applicable plan, and

(*ii*) designing and scoping the project;

(*2*) the levels of vehicle trips, vehicle miles traveled, and congestion that are

(*i*) assumed in the applicable plan, and

(*ii*) expected to result over the period covered by the applicable plan from the construction of the project considering any growth likely to result from the project;

(*3*) for each transportation control measure in the applicable plan likely to be affected by the project:

(*i*) its implementation schedule and expected emission reduction effectiveness from the applicable plan,

(*ii*) its current implementation status and, if feasible, its current effectiveness, and

(iii) any actions as part of the project which may beneficially or adversely affect the implementation and/or effectiveness of the TCM;

(*4*) CO emission levels which will result from the project over the period covered by the applicable plan considering any growth likely to result from the project; and

(*5*) ambient CO concentration levels which will result from the project over the period covered by the applicable

plan considering any growth likely to result from the project.

(B) *Findings.* Prior to approving any transportation project, the MPO shall determine if the project conforms to the applicable implementation plan. In making this determination, the MPO shall make and support the following findings for each project using the information documented in paragraph (d)(2)(ii)(A) of this section:

(*1*) that the project will provide for the implementation of TCMs affected by the project on the schedule set forth in the applicable plan;

(*2*) that CO emission levels, microscale and regional, resulting from the implementation of the project during the period covered by the applicable plan will not delay attainment or any required interim emission reductions and/or interfere with maintenance of the CO NAAQS in an area substantially affected by the project;

(*3*) that the project will not cause or contribute to a violation of the CO NAAQS during the period covered by the applicable plan near the project; and

(*4*) that the projected emissions from the project, when considered together with emissions projected for the conforming plan and program within the nonattainment area, do not cause the plan and program to exceed the emission reduction projections and schedules assigned to such plans and programs in the applicable implementation plan.

(e) *Exempt Projects.* An individual project is exempt from the requirements of paragraph (d) of this section if it is:

(1) located completely outside the nonattainment area;

(2) a safety project which is included in the statewide safety improvement program, will not alter the functional traffic capacity or capability of the facility being improved, and does not adversely affect the TCMs in the applicable plan;

(3) a transportation control measure from the approved applicable plan; or

(4) a mass transit project funded under the Urban Mass Transportation Act, 49 U.S.C.

[56 FR 5485, Feb. 11, 1991]

§ 52.139 [Reserved]

§ 52.140 Monitoring transportation trends.

(a) This section is applicable to the State of Arizona.

(b) In order to assure the effectiveness of the inspection and maintenance program and the retrofit devices required under the Arizona implementation plan, the State shall monitor the actual per-vehicle emissions reductions occurring as a result of such measures. All data obtained from such monitoring shall be included in the quarterly report submitted to the Administrator by the State in accordance with § 58.35 of this chapter. The first quarterly report shall cover the period January 1 to March 31, 1976.

(c) In order to assure the effective implementation of §§ 52.137, 52.138, and 52.139, the State shall monitor vehicle miles traveled and average vehicle speeds for each area in which such sections are in effect and during such time periods as may be appropriate to evaluate the effectiveness of such a program. All data obtained from such monitoring shall be included in the quarterly report submitted to the Administrator by the State of Arizona in accordance with § 58.35 of this chapter. The first quarterly report shall cover the period from July 1 to September 30, 1974. The vehicle miles traveled and vehicle speed data shall be collected on a monthly basis and submitted in a format similar to Table 1.

TABLE 1

Time period _____

Affected area _____

Roadway type	VMT or average vehicle speed	
	Vehicle type (1)	Vehicle type (2)[1]
Freeway		
Arterial		
Collector		
Local		

[1] Continue with other vehicle types as appropriate.

(d) No later than March 1, 1974, the State shall submit to the Administrator a compliance schedule to implement this section. The program description shall include the following:

(1) The agency or agencies responsible for conducting, overseeing, and maintaining the monitoring program.

(2) The administrative procedures to be used.

(3) A description of the methods to be used to collect the emission data, VMT data, and vehicle speed data; a description of the geographical area to which the data apply; identification of the location at which the data will be collected; and the time periods during which the data will be collected.

(e) The quarterly reports specified in paragraphs (b) and (c) of this section shall be submitted to the Administrator through the Regional Office, and shall be due within 45 days after the end of each reporting period.

[38 FR 33376, Dec. 3, 1973, as amended at 39 FR 32113, Sept. 5, 1974; 44 FR 27571, May 10, 1979]

§ 52.141 [Reserved]

§ 52.142 Federal Implementation Plan for Tri-Cities landfill, Salt River Pima-Maricopa Indian Community.

The Federal Implementation Plan regulating emissions from an Energy Project at the Tri-Cities landfill located on the Salt River Pima-Maricopa Indian Community near Phoenix, Arizona is codified at 40 CFR 49.22.

[64 FR 65664, Nov. 23, 1999]

§ 52.143 [Reserved]

§ 52.144 Significant deterioration of air quality.

(a) The requirements of sections 160 through 165 of the Clean Act are not met, since the plan as it applies to stationary sources under the jurisdiction of the Pima County Health Department and the Maricopa County Department of Health Services and stationary sources locating on Indian lands does not include approvable procedures for preventing the significant deterioration of air quality.

(b) Regulation for preventing significant deterioration of air quality. The provisions of § 52.21 except paragraph (a)(1) are hereby incorporated and made a part of the applicable State plan for the State of Arizona for that portion applicable to the Pima County Health Department and the Maricopa County Department of Health Services and sources locating on Indian lands.

[48 FR 19879, May 3, 1983, as amended at 68 FR 11321, Mar. 10, 2003; 68 FR 74488, Dec. 24, 2003]

§ 52.145 Visibility protection.

(a) The requirements of section 169A of the Clean Air Act are not met, because the plan does not include approvable procedures for protection of visibility in mandatory Class I Federal areas.

(b) Regulations for visibility monitoring and new source review. The provisions of §§ 52.26, 52.27 and 52.28, are hereby incorporated and made part of the applicable plan for the State of Arizona.

(c) *Long-term strategy*. The provisions of § 52.29 are hereby incorporated and made part of the applicable plan for the State of Arizona.

(d) This paragraph is applicable to the fossil fuel-fired, steam-generating equipment designated as Units 1, 2, and 3 at the Navajo Generating Station in the Northern Arizona Intrastate Air Quality Control Region (§ 81.270 of this chapter).

(1) *Definitions.*

Administrator means the Administrator of EPA or his/her designee.

Affected Unit(s) means the steam-generating unit(s) at the Navajo Generating Station, all of which are subject to the emission limitation in paragraph (d)(2) of this section, that has accumulated at least 365 boiler operating days since the passage of the date defined in paragraph (d)(6) of this section applicable to it.

Boiler Operating Day for each of the boiler units at the Navajo Generating Station is defined as a 24-hour calendar day (the period of time between 12:01 a.m. and 12:00 midnight in Page, Arizona) during which coal is combusted in that unit for the entire 24 hours.

Owner or Operator means the owner, participant in, or operator of the Navajo Generating Station to which this paragraph is applicable.

Unit-Week of Maintenance means a period of 7 days during which a fossil fuel-fired steam-generating unit is under repair, and no coal is combusted in the unit.

(2) *Emission limitation.* No owner or operator shall discharge or cause the discharge of sulfur oxides into the atmosphere in excess of 42 ng/J [0.10 pound per million British thermal units (lb/MMBtu)] heat input.

(3) *Compliance determination.* Until at least one unit qualifies as an affected unit, no compliance determination is appropriate. As each unit qualifies for treatment as an affected unit, it shall be included in the compliance determination. Compliance with this emission limit shall be determined daily on a plant-wide rolling annual basis as follows:

(i) For each boiler operating day at each steam generating unit subject to the emission limitation in paragraph (d)(2) of this section, the owner or operator shall record the unit's hourly SO_2 emissions using the data from the continuous emission monitoring systems, [required in paragraph (d)(4) of this section] and the daily electric energy generated by the unit (in megawatt-hours) as measured by the megawatt-hour meter for the unit.

(ii) Compute the average daily SO_2 emission rate in ng/J (lb/MMBtu) following the procedures set out in method 19, appendix A, 40 CFR part 60 in effect on October 3, 1991.

(iii) For each boiler operating day for each affected unit, calculate the product of the daily SO_2 emission rate (computed according to paragraph (d)(3)(ii) of this section) and the daily electric energy generated (recorded according to paragraph (d)(3)(i) of this section) for each unit.

(iv) For each affected unit, identify the previous 365 boiler operating days to be used in the compliance determination. Except as provided in paragraphs (d)(9) and (d)(10) of this section, all of the immediately preceding 365 boiler operating days will be used for compliance determinations.

(v) Sum, for all affected units, the products of the daily SO_2 emission rate-electric energy generated (as calculated according to paragraph (d)(3)(iii) of this section) for the boiler operating days identified in paragraph (d)(3)(iv) of this section.

(vi) Sum, for all affected units, the daily electric energy generated (recorded according to paragraph (d)(3)(i) of this section) for the boiler operating days identified in paragraph (d)(3)(iv) of this section.

(vii) Calculate the weighted plant-wide annual average SO_2 emission rate by dividing the sum of the products determined according to paragraph (d)(3)(v) of this section by the sum of the electric energy generated determined according to paragraph (d)(3)(vi) of this section.

(viii) The weighted plant-wide annual average SO_2 emission rate shall be used to determine compliance with the emission limitation in paragraph (d)(2) of this section.

(4) *Continuous emission monitoring.* The owner or operator shall install, maintain, and operate continuous emission monitoring systems to determine compliance with the emission limitation in paragraph (d)(2) of this section as calculated in paragraph (d)(3) of this section. This equipment shall meet the specifications in appendix B of 40 CFR part 60 in effect on October 3, 1991. The owner or operator shall comply with the quality assurance procedures for continuous emission monitoring systems found in appendix F of 40 CFR part 60 in effect on October 3, 1991.

(5) *Reporting requirements.* For each steam generating unit subject to the emission limitation in paragraph (d)(2) of this section, the owner or operator:

(i) Shall furnish the Administrator written notification of the SO_2, oxygen, and carbon dioxide emissions according to the procedures found in 40 CFR § 60.7 in effect on October 3, 1991.

(ii) Shall furnish the Administrator written notification of the daily electric energy generated in megawatt-hours.

(iii) Shall maintain records according to the procedures in 40 CFR 60.7 in effect on October 3, 1991.

(iv) Shall notify the Administrator by telephone or in writing within one business day of any outage of the control system needed for compliance with the emission limitation in paragraph (d)(2) of this section and shall submit a follow-up written report within 30 days of the repairs stating how the repairs were accomplished and justifying the amount of time taken for the repairs.

(6) *Compliance dates.* The requirements of this paragraph shall be applicable to one unit at the Navajo Generating Station beginning November 19, 1997, to two units beginning November 19, 1998, and to all units beginning on August 19, 1999.

(7) *Schedule of compliance.* The owner or operator shall take the following actions by the dates specified:

(i) By June 1, 1992, award binding contracts to an architectural and engineering firm to design and procure the control system needed for compliance with the emission limitation in paragraph (d)(2) of this section.

(ii) By January 1, 1995, initiate onsite construction or installation of a control system for the first unit.

(iii) By May 1, 1997, initiate start-up testing of the control system for the first unit.

(iv) By May 1, 1998, initiate start-up testing of the control system for the second unit.

(v) By February 1, 1999, initiate start-up testing of the control system for the third unit.

The interim deadlines will be extended if the owner or operators can demonstrate to the Administrator that compliance with the deadlines in paragraph (d)(6) of this section will not be affected.

(8) *Reporting on compliance schedule.* Within 30 days after the specified date for each deadline in the schedule of compliance (paragraph (d)(7) of this section, the owner or operator shall notify the Administrator in writing whether the deadline was met. If it was not met the notice shall include an explanation why it was not met and the steps which shall be taken to ensure future deadlines will be met.

(9) *Exclusion for equipment failure during initial operation.* For each unit, in determining compliance for the first year that such unit is required to meet the emission limitation in paragraph (d)(2) of this section, periods during which one of the following conditions are met shall be excluded:

(i) Equipment or systems do not meet designer's or manufacturer's performance expectations.

(ii) Field installation including engineering or construction precludes equipment or systems from performing as designed.

The periods to be excluded shall be determined by the Administrator based on the periodic reports of compliance with the emission limitation in paragraph (d)(2) of this section which shall identify the times proposed for exclusion and provide the reasons for the exclusion, including the reasons for the control system outage. The report also shall describe the actions taken to avoid the outage, to minimize its duration, and to reduce SO_2 emissions at the plant to the extent practicable while the control system was not fully operational. Whenever the time to be excluded exceeds a cumulative total of 30 days for any control system for any affected unit, the owner or operators shall submit a report within 15 days addressing the history of and prognosis for the performance of the control system.

(10) *Exclusion for catastrophic failure.* In addition to the exclusion of periods allowed in paragraph (d)(9) of this section, any periods of emissions from an affected unit for which the Administrator finds that the control equipment or system for such unit is out of service because of catastrophic failure of the control system which occurred for reasons beyond the control of the owner or operators and could not have been prevented by good engineering practices will be excluded from the compliance determination. Events which are the consequence of lack of appropriate maintenance or of intentional or negligent conduct or omissions of the owner or operators or the control system design, construction, or operating contractors do not constitute catastrophic failure.

(11) *Equipment operation.* The owner or operator shall optimally operate all equipment or systems needed to comply with the requirements of this paragraph consistent with good engineering practices to keep emissions at or below the emission limitation in paragraph (d)(2) of this section, and following outages of any control equipment or systems the control equipment or system will be returned to full operation as expeditiously as practicable.

(12) *Maintenance scheduling.* On March 16 of each year starting in 1993,

the owner or operator shall prepare and submit to the Administrator a long-term maintenance plan for the Navajo Generating Station which accommodates the maintenance requirements for the other generating facilities on the Navajo Generating Station grid covering the period from March 16 to March 15 of the next year and showing at least 6 unit-weeks of maintenance for the Navajo Generating Station during the November 1 to March 15 period, except as provided in paragraph (d)(13) of this section. This plan shall be developed consistent with the criteria established by the Western States Coordinating Council of the North American Electric Reliability Council to ensure an adequate reserve margin of electric generating capacity. At the time that a plan is transmitted to the Administrator, the owner or operator shall notify the Administrator in writing if less than the full scheduled unit-weeks of maintenance were conducted for the period covered by the previous plan and shall furnish a written report stating how that year qualified for one of the exceptions identified in paragraph (d)(13) of this section.

(13) *Exceptions for maintenance scheduling.* The owner or operator shall conduct a full 6 unit-weeks of maintenance in accordance with the plan required in paragraph (d)(12) of this section unless the owner or operator can demonstrate to the satisfaction of the Administrator that a full 6 unit-weeks of maintenance during the November 1 to March 15 period should not be required because of the following:

(i) There is no need for 6 unit-weeks of scheduled periodic maintenance in the year covered by the plan;

(ii) The reserve margin on any electrical system served by the Navajo Generating Station would fall to an inadequate level, as defined by the criteria referred to in paragraph (d)(12) of this section.

(iii) The cost of compliance with this requirement would be excessive. The cost of compliance would be excessive when the economic savings to the owner or operator of moving maintenance out of the November 1 to March 15 period exceeds $50,000 per unit-day of maintenance moved.

(iv) A major forced outage at a unit occurs outside of the November 1 to March 15 period, and necessary periodic maintenance occurs during the period of forced outage.

If the Administrator determines that a full 6 unit-weeks of maintenance during the November 1 to March 15 period should not be required, the owner or operator shall nevertheless conduct that amount of scheduled maintenance that is not precluded by the Administrator. Generally, the owner or operator shall make best efforts to conduct as much scheduled maintenance as practicable during the November 1 to March 15 period.

[50 FR 28553, July 12, 1985, as amended at 52 FR 45137, Nov. 24, 1987; 56 FR 50186, Oct. 3, 1991; 61 FR 14975, Apr. 4, 1996]

§ 52.146 Particulate matter (PM–10) Group II SIP commitments.

(a) On December 28, 1988, the Governor's designee for Arizona submitted a revision to the State Implementation Plan (SIP) for Casa Grande, Show Low, Safford, Flagstaff and Joseph City, that contains commitments, from the Director of the Arizona Department of Environmental Quality, for implementing all of the required activities including monitoring, reporting, emission inventory, and other tasks that may be necessary to satisfy the requirements of the PM–10 Group II SIPs.

(b) The Arizona Department of Environmental Quality has committed to comply with the PM–10 Group II State Implementation Plan (SIP) requirements for Casa Grande, Show Low, Safford, Flagstaff and Joseph City as provided in the PM–10 Group II SIPs for these areas.

(c) On December 28, 1988, the Governor's designee for Arizona submitted a revision to the State Implementation Plan (SIP) for Ajo, that contains commitments from the Director of the Arizona Department of Environmental Quality, for implementing all of the required activities including monitoring, reporting, emission inventory, and other tasks that may be necessary to satisfy the requirements of the PM–10 Group II SIPs.

(d) The Arizona Department of Environmental Quality has committed to comply with the PM–10 Group II State

Implementation Plan (SIP) requirements.

[55 FR 17437, Apr. 25, 1990 and 55 FR 18108, May 1, 1990]

§ 52.150 Yavapai-Apache Reservation.

(a) The provisions for prevention of significant deterioration of air quality at 40 CFR 52.21 are applicable to the Yavapai-Apache Reservation, pursuant to § 52.21(a).

(b) In accordance with section 164 of the Clean Air Act and the provisions of 40 CFR 52.21(g), the Yavapai-Apache Indian Reservation is designated as a Class I area for the purposes of preventing significant deterioration of air quality.

[61 FR 56470, Nov. 1, 1996]

Subpart E—Arkansas

§ 52.170 Identification of plan.

(a) *Purpose and scope.* This section sets forth the applicable State Implementation Plan (SIP) for Arkansas under section 110 of the Clean Air Act, 42 U.S.C. 7410, and 40 CFR part 51 to meet national ambient air quality standards.

(b) *Incorporation by reference.* (1) Material listed in paragraphs (c), (d) and (e) of this section with an EPA approval date prior to July 1 1998, was approved for incorporation by reference by the Director of the Federal Register in accordance with 5 U.S.C. 552(a) and 1 CFR part 51. Material is incorporated as it exists on the date of the approval, and notice of any change in the material will be published in the FEDERAL REGISTER. Entries in paragraphs (c), (d) and (e) of this section with EPA approval dates after July 1, 1998, will be incorporated by reference in the next update to the SIP compilation.

(2) EPA Region 6 certifies that the rules/regulations provided by EPA in the SIP compilation at the addresses in paragraph (b)(3) are an exact duplicate of the officially promulgated State rules/regulations which have been approved as part of the State Implementation Plan as of July 1, 1998.

(3) Copies of the materials incorporated by reference may be inspected at the Region 6 EPA Office at 1445 Ross Avenue, Suite 700, Dallas, Texas, 75202–2733; the EPA, Air and Radiation Docket and Information Center, Air Docket (6102), 401 M St., SW., Washington, DC 20460; or at the National Archives and Records Administration (NARA). For information on the availability of this material at NARA, call 202–741–6030, or go to: *http://www.archives.gov/federal_register/code_of_federal_regulations/ibr_locations.html.*

(c) *EPA approved regulations.*

EPA APPROVED REGULATIONS IN THE ARKANSAS SIP

State citation	Title/subject	State submittal/effective date	EPA approval date	Comments
Regulation 19: Regulations of the Arkansas Plan of Implementation for Air Pollution Control				
Chapter 1: Title, Intent and Purpose				
Section 19.101	Title	01/22/99	10/16/00 (65 FR 61108).	
Section 19.102	Applicability	01/22/99	10/16/00 (65 FR 61108).	
Section 19.103	Intent and Construction	01/22/99	10/16/00 (65 FR 61108).	
Section 19.104	Severability	01/22/99	10/16/00 (65 FR 61108).	
Chapter 2: Definitions				
Chapter 2	Definitions	01/22/99	10/16/00 (65 FR 61108).	
Chapter 3: Protection of the NAAQS				
Section 19.301	Purpose	01/22/99	10/16/00 (65 FR 61108).	

EPA APPROVED REGULATIONS IN THE ARKANSAS SIP—Continued

State citation	Title/subject	State submittal/effective date	EPA approval date	Comments
Section 19.302	Department Responsibilities.	01/22/99	10/16/00 (65 FR 61108).	
Section 19.303	Regulated Sources Responsibilities.	01/22/99	10/16/00 (65 FR 61108).	
Section 19.304	Delegated Federal Programs.	01/22/99	10/16/00 (65 FR 61108).	
Chapter 4: Minor Source Review				
Section 19.401	General Applicability	01/22/99	10/16/00 (65 FR 61108).	
Section 19.402	Approval Criteria	01/22/99	10/16/00 (65 FR 61108).	
Section 19.403	Owner/Operator's Responsibilities.	01/22/99	10/16/00 (65 FR 61108).	
Section 19.404	Required Information	01/22/99	10/16/00 (65 FR 61108).	
Section 19.405	Action on Application	01/22/99	10/16/00 (65 FR 61108).	
Section 19.406	Public Participation	01/22/99	10/16/00 (65 FR 61108).	
Section 19.407	Permit Amendments	01/22/99	10/16/00 (65 FR 61108).	
Section 19.408	Exemption from Permitting.	01/22/99	10/16/00 (65 FR 61108).	
Section 19.409	Transition	01/22/99	10/16/00 (65 FR 61108).	
Section 19.410	Permit Revocation and Cancellation.	01/22/99	10/16/00 (65 FR 61108).	
Section 19.411	General Permits	01/22/99	10/16/00 (65 FR 61108).	
Section 19.412	Dispersion Modeling	01/22/99	10/16/00 (65 FR 61108).	
Section 19.413	Confidentiality	01/22/99	10/16/00 (65 FR 61108).	
Chapter 5: General Emission Limitations Applicable to Equipment				
Section 19.501	Purpose	01/22/99	10/16/00 (65 FR 61108).	
Section 19.502	General Regulations	01/22/99	10/16/00 (65 FR 61108).	
Section 19.503	Visible Emission Regulations.	01/22/99	10/16/00 (65 FR 61108).	
Section 19.504	Stack Height/Dispersion Regulations.	01/22/99	10/16/00 (65 FR 61108).	
Section 19.505	Revised Emission Limitation.	01/22/99	10/16/00 (65 FR 61108).	
Chapter 6: Upset and Emergency Conditions				
Section 19.601	Upset Conditions	01/22/99	10/16/00 (65 FR 61108).	
Section 19.602	Emergency Conditions	01/22/99	10/16/00 (65 FR 61108).	
Chapter 7: Sampling, Monitoring, and Reporting Requirements				
Section 19.701	Purpose	01/22/99	10/16/00 (65 FR 61108).	
Section 19.702	Air Emission Sampling	01/22/99	10/16/00 (65 FR 61108).	
Section 19.703	Continuous Emission Monitoring.	01/22/99	10/16/00 (65 FR 61108).	
Section 19.704	Notice of Completion	01/22/99	10/16/00 (65 FR 61108).	
Section 19.705	Recordkeeping and Reporting Requirements.	01/22/99	10/16/00 (65 FR 61108).	

EPA APPROVED REGULATIONS IN THE ARKANSAS SIP—Continued

State citation	Title/subject	State submittal/effective date	EPA approval date	Comments
Section 19.706	Public Availability of Emissions Data.	01/22/99	10/16/00 (65 FR 61108).	
Chapter 9: PSD				
Section 19.901	Title	01/22/99	10/16/00 (65 FR 61108).	
Section 19.902	Purposes	01/22/99	10/16/00 (65 FR 61108).	
Section 19.903	Definitions	01/22/99	10/16/00 (65 FR 61108).	
Section 19.904	Adoption of Regulations.	01/22/99	10/16/00 (65 FR 61108).	
Chapter 10: Regulations for the Control of Volatile Organic Compounds				
Section 19.1001	Title	01/22/99	10/16/00 (65 FR 61108).	
Section 19.1002	Purpose	01/22/99	10/16/00 (65 FR 61108).	
Section 19.1003	Definitions	01/22/99	10/16/00 (65 FR 61108).	
Section 19.1004	General Provisions	01/22/99	10/16/00 (65 FR 61108).	
Section 19.1005	Provisions for Specific Processes.	01/22/99	10/16/00 (65 FR 61108).	
Section 19.1006	Severability	01/22/99	10/16/00 (65 FR 61108).	
Chapter 11: Major Source Permitting Procedures				
Chapter 11	Major Source Permitting Procedures.	01/22/99	10/16/00 (65 FR 61108).	
Appendix A: Insignificant Activities List				
Appendix A:	Insignificant Activities List.	01/22/99	10/16/00 (65 FR 61108).	
Regulation 26: Regulations of the Arkansas Operating Permit Program				
Chapter 3: Requirements for Permit Applicability				
Section 26.301	Requirement for a permit.	08/10/00	10/9/01 (66 FR 51316).	
Section 26.302	Sources subject to permitting.	08/10/00	10/9/01 (66 FR 51316).	
Chapter 4: Applications for Permits				
Section 26.401	Duty to apply	08/10/00	10/9/01 (66 FR 51316).	
Section 26.402	Standard application form and required information.	08/10/00	10/9/01 (66 FR 51316).	
Section 26.407	Complete application	08/10/00	10/9/01 (66 FR 51316).	
Section 26.409	Confidential information	08/10/00	10/9/01 (66 FR 51316).	
Section 26.410	Certification by responsible official.	08/10/00	10/9/01 (66 FR 51316).	
Chapter 5: Action on Application				
Section 26.501	Action of part 70 permit applications.	08/10/00	10/9/01	Subsection B Not in SIP
Section 26.502	Final action on permit application.	08/10/00	10/9/01 (66 FR 51316).	
Chapter 6: Permit Review by the Public, Affected States, and EPA				
Section 26.601	Untitled introduction to Chapter 6.	08/10/00	10/9/01 (66 FR 51316).	

EPA APPROVED REGULATIONS IN THE ARKANSAS SIP—Continued

State citation	Title/subject	State submittal/effective date	EPA approval date	Comments
Section 26.602	Public participation	08/10/00	10/9/01	Only Subsection A(1), A(2), A(5), and D in SIP
Section 26.603	Transmission of information to the Administrator.	08/10/00	10/9/01 (66 FR 51316).	
Section 26.604	Review of draft permit by affected States.	08/10/00	10/9/01 (66 FR 51316).	
Arkansas Regulation No. 9: Permit Fees				
Section 1	Purpose	12/16/85	11/26/86, 51 FR 40975	Ref 52.200(c)(24).
Section 2	Short Title	12/16/85	11/26/86, 51 FR 40975	Ref 52.200(c)(24).
Section 3	Definitions	12/16/85	11/26/86, 51 FR 40975	Ref 52.200(c)(24).
Section 4	Applicability	12/16/85	11/26/86, 51 FR 40975	Ref 52.200(c)(24).
Section 5	Maximum Fees	12/16/85	11/26/86, 51 FR 40975	Ref 52.200(c)(24).
Section 6	Retroactivity	12/16/85	11/26/86, 51 FR 40975	Ref 52.200(c)(24).
Section 7	Permit Fee Payment	12/16/85	11/26/86, 51 FR 40975	Ref 52.200(c)(24).
Section 8	Refunds	12/16/85	11/26/86, 51 FR 40975	Ref 52.200(c)(24).
Section 9	Solid Waste Fee			NOT IN SIP.
Section 10	Fee Schedule	12/16/85	11/26/86, 51 FR 40975	Ref 52.200(c)(24).
Section 11	Review of Fees	12/16/85	11/26/86, 51 FR 40975	Ref 52.200(c)(24).
Section 12	Severability	12/16/85	11/26/86, 51 FR 40975	Ref 52.200(c)(24).
Section 13	Appeals	12/16/85	11/26/86, 51 FR 40975	Ref 52.200(c)(24).
Section 14	Effective Date	12/16/85	11/26/86, 51 FR 40975	Ref 52.200(c)(24).
Prevention of Significant Deterioration Supplement to the Arkansas Plan of Implementation for Air Pollution Control				
Section 1	Title	06/19/90	05/02/91, 56 FR 20137	Ref 52.200(c)(28). See 40 CFR 52.181 for status of Arkansas PSD regulations in Arkansas SIP.
Section 2	Purpose	06/19/90	05/02/91, 56 FR 20137	Ref 52.200(c)(28).
Section 3	Definitions	06/19/90	05/02/91, 56 FR 20137	Ref 52.200(c)(28).
Section 4	Adoption of Regulations.	06/19/90	05/02/91, 56 FR 20137	Ref 52.200(c)(28).
Section 5	Severability	06/19/90	05/02/91, 56 FR 20137	Ref 52.200(c)(28).
Section 6	Effective Date	06/19/90	05/02/91, 56 FR 20137	Ref 52.200(c)(28).
Regulations for the Control of Volatile Organic Compounds				
Section 1	Title	04/04/79	01/29/80, 45 FR 06569	Ref 52.200(c)(7).
Section 2	Purpose	04/04/79	01/29/80, 45 FR 06569	Ref 52.200(c)(7).
Section 3	Definitions	04/23/81	10/13/81, 46 FR 50370	Ref 52.200(c)(13).
Section 4	General Provisions	04/23/81	10/13/81, 46 FR 50370	Ref 52.200(c)(13).
Section 5	Provisions for Specific Processes.	12/19/79	02/08/83, 48 FR 05722	Ref 52.200(c)(21).
Section 6	Severability	04/04/79	01/29/80, 45 FR 06569	Ref 52.200(c)(7).

(d) *EPA-approved State source-specific requirements.*

EPA-APPROVED ARKANSAS SOURCE-SPECIFIC REQUIREMENTS

Name of source	Permit No.	State approval/effective date	EPA approval date	Comments
None.				

(e) *EPA-approved nonregulatory provisions and quasi-regulatory measures.*

EPA APPROVED STATUTES IN THE ARKANSAS SIP

State citation	Title/subject	State submittal/effective date	EPA approval date	Comments
Arkansas Water and Air Pollution Control Act—Part I				
82–1901	Title of Act	01/28/72	05/31/72, 37 FR 10850	Ref 52.200(a)&(b).
82–1902	Definitions	01/28/72	05/31/72, 37 FR 10850	Ref 52.200(a)&(b).
82–1903	Pollution Control Commission.	01/28/72	05/31/72, 37 FR 10850	Ref 52.200(a)&(b).
82–1904	Powers and Duties of Commission.	01/28/72	05/31/72, 37 FR 10850	Ref 52.200(a) & (b).
82–1905	Persons Operating Disposal System—Furnishing Information and Permitting Examinations and Surveys.	01/28/72	05/31/72, 37 FR 10850	Ref 52.200(a) & (b).
82–1906	Hearing Before Commission or Member—Appeal Procedure.	01/28/72	05/31/72, 37 FR 10850	Ref 52.200(a) & (b).
82–1907	Co-operation with Agency of Another State or United States.	01/28/72	05/31/72, 37 FR 10850	Ref 52.200(a) & (b).
82–1908	Actions Declared Public Nuisance—Permit to Construct, Make Changes in or Operate Disposal System—Submission of Plans.	01/28/72	05/31/72, 37 FR 10850	Ref 52.200(a) & (b).
82–1909	Violation of Act a Misdemeanor—Pollution a Nuisance—Abatement.	01/28/72	05/31/72, 37 FR 10850	Ref 52.200(a) & (b).
Arkansas Environmental Permit Fees Act (Act 817 of 1983)				
82–1916 thru 82–1921	Permit Fees Act	12/16/85	11/12/86, 51 FR 40975	Ref 52.200(c)(24).
Arkansas Water and Air Pollution Control Act—Part II				
82–1931	Air Pollution—State Policy.	01/28/72	05/31/72, 37 FR 10850	Ref 52.200(a) & (b).
82–1932	Purpose of Act	01/28/72	05/31/72, 37 FR 10850	Ref 52.200(a) & (b).
82–1933	Definitions	01/28/72	05/31/72, 37 FR 10850	Ref 52.200(a) & (b).
82–1934	Exemptions	01/28/72	05/31/72, 37 FR 10850	Ref 52.200(a) & (b).
82–1935	Powers of Commission	01/28/72	05/31/72, 37 FR 10850	Ref 52.200(a) & (b).
82–1936	Factors in Exercise of Commission Powers.	01/28/72	05/31/72, 37 FR 10850	Ref 52.200(a) & (b).
82–1937	Industrial Secrets Confidential—Revealing a Misdemeanor.	11/25/85	08/04/86, 51 FR 27804	Ref 52.200(c)(23).
82–1938	Unlawful Acts	01/28/72	05/31/72, 37 FR 10850	Ref 52.200(a) & (b).
82–1939	Variance From Regulations.	01/28/72	05/31/72, 37 FR 10850	Ref 52.200(a) & (b).
82–1940	Application of Water Pollution Provisions.	01/28/72	05/31/72, 37 FR 10850	Ref 52.200(a) & (b).
82–1941	Political Subdivision Forbidden to Legislate on Air Pollution.	01/28/72	05/31/72, 37 FR 10850	Ref 52.200(a) & (b).
82–1942	Radiation Control Law not Amended or Repealed—No authority to Commission Over Employer-Employee Relationships.	01/28/72	05/31/72, 37 FR 10850	Ref 52.200(a) & (b).
82–1943	Private Rights Unchanged.	01/28/72	05/31/72, 37 FR 10850	Ref 52.200(a) & (b).

EPA APPROVED STATUTES IN THE ARKANSAS SIP—Continued

State citation	Title/subject	State submittal/effective date	EPA approval date	Comments
Small Business Assistance Program Act (Act 251 of 1993)				
Act 251	SBAP Act	02/26/93	03/08/95 60 FR 12691	Ref 52.200(c)(31).

EPA APPROVED CONTROL MEASURES IN THE ARKANSAS SIP

Control measures	Applicable geographic or nonattainment area	State submittal/effective date	EPA approval date	Comments
Air Quality Surveillance Network.	Statewide	02/15/77	04/11/79, 44 FR 21645	Ref 52.200(c)(6).
Lead SIP	Statewide	12/10/79	04/16/82, 47 FR 16330	Ref 52.200(c)(17).
Air Quality Surveillance Data Reporting.	Statewide	04/24/80	08/06/81, 46 FR 40006	Ref 52.200(c)(20).
Protection of Visibility in Mandatory Class I Federal Areas.	Statewide	06/12/85	02/10/86, 51 FR 04912	Ref 52.200(c)(22).
Part II of the Visibility Protection Plan.	Statewide	10/09/87	07/21/88, 53 FR 27517	Ref 52.200(c)(25)
Stack Height Negative Declaration.	Statewide	09/12/86	04/10/89, 54 FR 14222	Ref 52.200(c)(26).
Small Business Stationary Source Technical and Environmental Compliance Assistance Program.	Statewide	11/06/92	03/08/95, 60 FR 12691	Ref 52.200(c)(31).

[63 FR 56927, Oct. 23, 1998, as amended at 65 FR 61107, Oct. 16, 2000; 66 FR 51316, Oct. 9, 2001]

§ 52.171 Classification of regions.

The Arkansas plan was evaluated on the basis of the following classifications:

Air quality control region	Pollutant				
	Particulate matter	Sulfur oxides	Nitrogen dioxide	Carbon monoxide	Ozone
Central Arkansas Intrastate	II	III	III	III	III
Metropolitan Fort Smith Interstate	II	III	III	III	III
Metropolitan Memphis Interstate	I	III	III	III	I
Monroe (Louisiana)-El Dorado (Arkansas) Interstate	II	III	III	III	III
Northeast Arkansas Intrastate	III	III	III	III	III
Northwest Arkansas Intrastate	III	III	III	III	III
Shreveport-Texarkana-Tyler Interstate	II	III	III	III	III

[37 FR 10850, May 31, 1972, as amended at 39 FR 16346, May 8, 1974; 45 FR 6571, Jan. 29, 1980]

§ 52.172 Approval status.

With the exceptions set forth in this subpart, the Administrator approves Arkansas' plan for the attainment and maintenance of the national standards under section 110 of the Clean Air Act. Further, the Administrator finds that the plan satisfies all requirements of Part D of the Clean Air Act, as amended in 1977, except as noted below.

[45 FR 6571, Jan. 29, 1980]

§§ 52.173–52.180 [Reserved]

§ 52.181 Significant deterioration of air quality.

(a) The plan submitted by the Governor of Arkansas as follows:

(1) April 23, 1981—submittal of the PSD Supplement Arkansas Plan of Implementation for Pollution Control (the "PSD Supplement") submitted April 23, 1981 (as adopted by the Arkansas Commission on Pollution Control and Ecology (ACPCE) on April 10, 1981);

(2) June 3, 1988—submittal of revisions to the PSD Supplement (revised and adopted by the ACPCE on March 25, 1988);

(3) June 19, 1990—submittal of revisions to the PSD Supplement (revised and adopted by the ACPCE on May 25, 1990), and;

(4) March 5, 1999—submittal of Regulation 19, Chapter 9, Prevention of Significant Deterioration which recodified Arkansas' PSD regulations (as adopted by the Arkansas Pollution Control and Ecology Commission on January 22, 1999)

(b) The requirements of sections 160 through 165 of the Clean Air Act are not met for federally designated Indian lands. Therefore, the provisions of § 52.21 except paragraph (a)(1) are hereby incorporated and made a part of the applicable implementation plan and are applicable to sources located on land under the control of Indian governing bodies.

[56 FR 20139, May 2, 1991, as amended at 63 FR 17683, Apr. 10, 1998; 63 FR 32981, June 17, 1998; 65 FR 61108, Oct. 16, 2000; 68 FR 11322, Mar. 10, 2003; 68 FR 74488, Dec. 24, 2003]

§ 52.183 Small business assistance program.

The Governor of Arkansas submitted on November 6, 1992, a plan revision to develop and implement a Small Business Stationary Source Technical and Environmental Compliance Assistance Program (PROGRAM) to meet the requirements of section 507 of the Clean Air Act by November 15, 1994. The plan commits to provide technical and compliance assistance to small businesses, hire an Ombudsman to serve as an independent advocate for small businesses, and establish a Compliance Advisory Panel to advise the program and report to the EPA on the program's effectiveness. On April 23, 1993, the Governor submitted Act 251 of 1993 which establishes the Compliance Advisory Panel for the PROGRAM.

[60 FR 12695, Mar. 8, 1995]

§ 52.200 Original identification of plan section.

(a) This section identifies the original "Arkansas Plan for Implementation for Air Pollution Control" and all revisions submitted by Arkansas that were federally approved prior to July 1, 1998.

(b) The plan was officially submitted on January 28, 1972.

(c) The plan revisions listed below were submitted on the dates specified.

(1) A certification that the public hearings on the plan were held was submitted by the State Department of Pollution Control and Ecology on January 25, 1972. (Non-regulatory)

(2) State Department of Pollution Control and Ecology letter outlining projected emission reductions, ASA forecasts, source surveillance, legal authority and interstate cooperation was submitted on February 24, 1972. (Non-regulatory)

(3) Revision of section 16 of the State air code was submitted by the Department of Pollution Control and Ecology on July 7, 1972.

(4) June 27, 1975, letter from the Governor submitting sections 1 through 10 of the Regulations and Strategy of the Arkansas Plan of Implementation for Air Pollution Control except those portions relating to delegation of authority to enforce Federal requirements.

(5) August 16, 1976, statement issued by Director of the Arkansas Department of Pollution Control and Ecology specifying the test and reference methods for determining compliance with emission limitations.

(6) Administrative changes to the Arkansas Air Quality Surveillance Network were submitted by the Arkansas Department of Pollution Control and Ecology on February 15, 1977, January 10, 1978, and March 27, 1978. (Non-regulatory.)

(7) On April 4, 1979, the Governor submitted the nonattainment area plan for the area designated nonattainment as of March 3, 1978.

(8) On August 14, 1979, the Governor submitted supplemental information clarifying the plan.

(9) Revisions to Arkansas Regulation 4.5(a) for the "Control of Volatile Organic Compounds" showing a final compliance date of June 1, 1981, was submitted by the Arkansas Governor on December 10, 1979.

(10) A modification to the definition for lowest achievable emission rate (LAER), consistent with the definition contained in section 171(3) of the Act,

was submitted by the Arkansas Governor on December 10, 1979.

(11) On July 11, 1979, the Governor submitted revisions to section 6(a) malfunction or upset and section 7(e) continuous emission monitoring of the Arkansas Regulations.

(12) Revisions to section 3 (i.e., 3.(a), (b), (k), (l), (n), (o), (z), (bb), (dd), (ee), (ff), and (gg)), section 4 (i.e., 4.1(b), 4.2(a), 4.5(a)(1), 4.5(a)(2), 4.6(c), and 4.6(d)), and section 5 (i.e., 5.4 and 5.5) were adopted by the Arkansas Commission on Pollution Control and Ecology on September 26, 1980 and submitted by the Governor on October 10, 1980.

(13) Revisions to section 3 (i.e., 3.(ii) through 3.(nn)), section 4 (i.e., 4.1, 4.5(a)(1), 4.5(a)(2), and 4.6(e)), and section 5 (i.e., 5.6) of the Arkansas Regulations for the Control of Volatile Organic Compounds were adopted by the Arkansas Commission on Pollution Control and Ecology on April 10, 1981 and submitted by the Governor on April 23, 1981.

(14) A variance to Regulation 8 for Weyerhaeuser Gypsum Plant in Nashville, Arkansas was submitted by the Governor on June 29, 1981.

(15) On April 23, 1981, the Governor submitted revisions to the plan to incorporate Federal Prevention of Significant Deterioration (PSD) Regulations 40 CFR 52.21 by reference.

(16) On September 11, 1981, the Governor submitted a revision to section 8 of the Regulations of the Arkansas Plan of Implementation for Air Pollution Control which implements an emission limit for Energy Systems Company of El Dorado, Arkansas.

(17) The Arkansas State Implementation Plan for lead was submitted to EPA on December 10, 1979, by the Governor of Arkansas as adopted by the Arkansas Department of Pollution Control and Ecology on November 16, 1979. A letter of clarification dated January 5, 1982, also was submitted.

(18) Revisions to the plan for intergovernmental consultation, interstate pollution abatement, and composition of the Arkansas Commission on Pollution Control and Ecology were submitted to EPA by the Arkansas Department of Pollution Control and Ecology on January 9, 1980.

(19) Revision to the plan for maintenance of employee pay was submitted to EPA by the Arkansas Department of Pollution Control and Ecology on January 9, 1980.

(20) On April 24, 1980, the Governor submitted final revisions to the ambient monitoring portion of the plan.

(21) On December 10, 1979, the Governor submitted a revision to Section 5.1(a) of the Regulation of the Arkansas Plan of Implementation for Air Pollution Control, which controls VOC emissions. This revision was adopted by the Arkansas Commission on Pollution Control and Ecology on November 16, 1979.

(22) On July 12, 1985, the Governor submitted a revision entitled, "Protection of Visibility in Mandatory Class I Federal Areas, May 6, 1985." This submittal included new source review regulations and visibility monitoring strategy as adopted by the Arkansas Commission on Pollution Control and Ecology on May 24, 1985.

(i) Incorporation by reference.

(A) New source review regulations include amendments to rules and regulations of the Arkansas Department of Pollution Control and Ecology entitled, "Prevention of Significant Deterioration Supplement to the Arkansas Plan of Implementation for Air Pollution Control," Sections 1 through 6, adopted on May 24, 1985.

(B) Arkansas Department of Pollution Control and Ecology Minute Order No. 85–12, adopted May 24, 1985.

(ii) Additional Material.

(A) Narrative submittal, including introduction, and visibility monitoring strategy.

(23) A revision to the Arkansas Plan of Implementation of Air Pollution Control was submitted by the Governor on November 25, 1985.

(i) Incorporation by reference.

(A) Act 763 of 1985 (public availability of emission data) approved April 3, 1985. Act 763 of 1985 amends section 82–1937 (Industrial secrets confidential—Revealing a misdemeanor) of the Arkansas Water and Air Pollution Control Act.

(24) A revision to the Arkansas Plan of Implementation for Air Pollution Control was submitted by the Governor on December 16, 1985.

(i) Incorporation by reference.

(A) Act 817 of 1983 (permit fees) adopted March 25, 1983. Act 817 of 1983 added sections 82–1916 thru 82–1921 to the Arkansas Statutes. (B) Arkansas Department of Pollution Control and Ecology Regulation No. 9 (Regulations for Development and Implementation of a Permit Fee System for Environmental Permits) adopted by the Arkansas Commission on Pollution Control and Ecology on November 16, 1984. Only those portions of Regulation No. 9 related to air permits are incorporated.

(25) Part II of the Visibility Protection Plan was submitted by the Governor on October 9, 1987.

(i) Incorporation by reference.

(A) Revision entitled "Arkansas Plan of Implementation for Air Pollution Control—Revision: Protection of Visibility in Mandatory Class I Federal Areas: Part II—Long-Term Strategy, September 29, 1987". This submittal includes a visibility long-term strategy and general plan provisions as adopted by the Arkansas Commission on Pollution Control and Ecology on September 25, 1987.

(B) Arkansas Department of Pollution Control and Ecology, Minute Order No. 87–24, adopted September 25, 1987.

(ii) Additional material.

(A) None.

(26) A revision to the Arkansas Plan of Implementation for Air Pollution Control, as adopted by the Arkansas Commission on Pollution Control and Ecology on May 22, 1987, was submitted by the Governor of Arkansas on July 1, 1987. This revision adds the definitions and dispersion technique regulations required to implement the Federal stack height regulations.

(i) Incorporation by reference.

(A) Sections 3(r), 3(s), 3(t), 3(u), 3(v), 3(w), 3(x), 3(y), 5(f), and 5(g) of the Arkansas Plan of Implementation for Air Pollution Control as adopted by the Arkansas Commission on Pollution Control and Ecology on May 22, 1987.

(ii) Additional material—None.

(27) Revisions to the Arkansas State Implementation Plan for (1) the National Ambient Air Quality Standards and particulate matter definitions (subsections (z) through (ff) of "Section 3. Definitions"). (2) Prevention of Significant Deterioration of Air Quality and its Supplement, and (3) subsection f(ix) of "Section 4. Permits", as adopted on March 25, 1988, by the Arkansas Commission on Pollution Control and Ecology, were submitted by the Governor on June 3, 1988.

(i) Incorporation by reference.

(A) Regulations of the Arkansas Plan of Implementation for Air Pollution Control "Section 3. Definitions", subsections (z) through (ff), as promulgated on March 25, 1988.

(B) Prevention of Significant Deterioration Supplement Arkansas Plan of Implementation For Air Pollution Control, as amended on March 25, 1988.

(C) Regulations of the Arkansas Plan for Implementation for Air Pollution Control "Section 4. Permits", subsection f(ix), as promulgated on March 25, 1988.

(ii) Other material—None.

(28) Revisions to the Arkansas State Implementation Plan for Prevention of Significant Deterioration (PSD) of Air Quality Supplement Arkansas Plan of Implementation for Air Pollution Control (PSD nitrogen dioxide increments), as adopted on May 25, 1990, by the Arkansas Commission on Pollution Control and Ecology, were submitted by the Governor on June 19, 1990.

(i) Incorporation by reference.

(A) Prevention of Significant Deterioration Supplement Arkansas Plan of Implementation For Air Pollution Control as amended on May 25, 1990.

(ii) Additional Material—None.

(29)–(30) [Reserved]

(31) The State is required to implement a Small Business Stationary Source Technical and Environmental Compliance Assistance Program (PROGRAM) as specified in the plan revision submitted by the Governor on November 6, 1992. This plan submittal, as adopted by the Arkansas Commission on Pollution Control and Ecology on November 5, 1992, was developed in accordance with section 507 of the Clean Air Act. On April 23, 1993, the Governor submitted Act 251 of 1993 which establishes the Compliance Advisory Panel (CAP) for the PROGRAM.

(i) Incorporation by reference.

(A) Act 251 of 1993 approved by the Governor on February 26, 1993. Included in this Act are provisions creating a

CAP, establishing membership of the CAP, and addressing the responsibilities and duties of the CAP.

(B) Arkansas Department of Pollution Control and Ecology, Minute Order No. 92–81, adopted November 5, 1992.

(ii) Additional material.

(A) Revision entitled, "Arkansas Small Business Stationary Source Technical and Environmental Compliance Assistance Program SIP Revision", adopted November 5, 1992.

(B) Legal opinion letter dated November 5, 1992, from Steve Weaver, Chief Counsel, Arkansas Department of Pollution Control and Ecology, regarding legality of Commission teleconference meeting.

[37 FR 10850, May 31, 1972. Redesignated at 63 FR 56827, Oct. 23, 1998]

EDITORIAL NOTE: For FEDERAL REGISTER citations affecting § 52.200, see the List of CFR Sections Affected, which appears in the Finding Aids section of the printed volume and on GPO Access.

Subpart F—California

§ 52.219 Identification of plan—conditional approval.

The plan revision commitments listed in paragraph (a) of this section were submitted on the date specified.

(a) On November 13, 1992, California submitted a commitment to prepare a revision to the California State Implementation Plan (SIP) for the California ozone nonattainment areas to address the requirement in section 182(c)(4)(B) of the 1990 Clean Air Act Amendments that requires the States to develop a SIP revision for all ozone nonattainment areas classified as serious and above to opt-out of the Clean-Fuel Fleet Program by submitting for EPA approval a substitute program(s) resulting in as much or greater long-term reductions in ozone-producing and toxic air emissions. The State submittal contained an interim milestone to supply more accurate emission reduction data demonstrating equivalence no later than one year after the publication date of the FEDERAL REGISTER notice approving the State's committal SIP revision. California is required to submit the final SIP revision by May 15, 1994. The State held a public meeting on this committal SIP on March 17, 1992. The California SIP revisions are met automatically when the SIP revision concerns a regulation previously adopted by the Board.

(b) [Reserved]

[58 FR 62533, Nov. 29, 1993]

§ 52.220 Identification of plan.

(a) Title of plan: "The State of California Implementation Plan for Achieving and Maintaining the National Ambient Air Quality Standards".

(b) The plan was officially submitted on February 21, 1972.

(1) Mendocino County APCD.

(i) Previously approved on May 31, 1972 and now deleted without replacement parts XI, XII, and part XIII.

(ii) Previously approved on May 31, 1972 in paragraph (b) of this section and now deleted without replacement, Part X, Paragraph 3.

(2) Placer County APCD.

(i) Previously approved on May 31, 1972 and now deleted without replacement Rule 42 (Mountain Counties Air Basin), Rules 40 and 42 (Lake Tahoe Air Basin).

(ii) Previously approved on May 31, 1972 in paragraph (b) of this section and now deleted without replacement, Rules 40 and 42.

(3) Tehama County APCD.

(i) Previously approved on May 31, 1972 and now deleted without replacement Rule 5.1.

(ii) Previously approved on May 31, 1972 and now deleted without replacement Rule 4.13.

(4) San Bernardino County APCD.

(i) Previously approved on May 31, 1972 and now deleted without replacement Regulation VI, Rules 100 to 104, 109, 110, 120, and 130 to 137.

(ii) Previously approved on May 31, 1972 in paragraph (b) of this section and now deleted without replacement, Regulation 3, Rules 40, 42, 43, and 44.

(5) Ventura County Air Pollution Control District.

(i) Previously approved on September 22, 1972 and now deleted without replacement Rule 18.

(6) Lassen County APCD.

(i) Previously approved on May 31, 1972 in paragraph (b) of this section and now deleted without replacement,

Rules 1.4, 3.2, 3.3 (Schedules 1–6), 3.4, and 3.5.

(7) Nevada County APCD.

(i) Previously approved on May 31, 1972 in paragraph (b) of this section and now deleted without replacement, Rule 41.

(8) Orange County APCD.

(i) Previously approved on May 31, 1972 in paragraph (b) of this section and now deleted without replacement, Rule 120.

(9) Sierra County APCD.

(i) Previously approved on May 31, 1972 in paragraph (b) of this section and now deleted without replacement, Rules 46 and 50.

(10) Siskiyou County APCD.

(i) Previously approved on May 31, 1972 in paragraph (b) of this section and now deleted without replacement, Rules 3.1, 3.2, and 3.3.

(11) Yolo-Solano AQMD.

(i) Previously approved on May 31, 1972 in paragraph (b) of this section and now deleted without replacement, Rules 1.7 and 2.18.

(c) The plan revisions listed below were submitted on the dates specified.

(1) Air quality data submitted on April 10, 1972, by the Air Resources Board.

(2) Report on status of regulations submitted on April 19, 1972, by the Air Resources Board.

(3) Emission inventory submitted on April 21, 1972, by the Air Resources Board.

(4) Air quality data submitted on April 26, 1972, by the Air Resources Board.

(5) Air quality data submitted on May 5, 1972, by the Air Resources Board.

(6) Revised regulations for all APCD's submitted on June 30, 1972, by the Governor, except for:

(i) San Diego County Air Pollution Control District.

(A) Rule 65 is now removed without replacement as of March 14, 1989.

(B) Previously approved on Septemeber 22, 1972 and now deleted without replacement Rules 44, 75, 77 to 80, 82 to 84, and 86 to 91.

(C) Previously approved on September 22, 1972 and now deleted without replacement, Rules 12 and 13.

(ii) Calaveras County APCD.

(A) Previously approved on September 22, 1972 and now deleted without replacement Rule 305.

(B) Previously approved on September 22, 1972 in paragraph (c) of this section and now deleted without replacement, Rule 109.

(iii) Colusa County APCD.

(A) Previously approved on September 22, 1972 and now deleted without replacement Rules 3.1 and 5.1 to 5.17.

(B) Previously approved on September 22, 1972 in paragraph (c) of this section and now deleted without replacement, Rules 1.4, 2.13, 6.11 and 6.12.

(iv) Fresno County APCD.

(A) Previously approved on September 22, 1972 and now deleted without replacement Rules 501, 502, 504, 506, 508 to 512, 514, 516, and 517.

(B) Previously approved on September 22, 1972 in paragraph (c) of this section and now deleted without replacement, Rules 104, 105, 107, 109, 303, and 304.

(v) Glenn County APCD.

(A) Previously approved on September 22, 1972 and now deleted without replacement Rules 111, 113 to 117, 119 to 125, and 150.

(B) Previously approved on September 22, 1972 in paragraph (c) of this section and now deleted without replacement, Rules 151 and 153.

(vi) Kern County APCD (including Southeast Desert).

(A) Previously approved on September 22, 1972 and now deleted without replacement Rules 502, 505 to 510, 512 to 515, and 517.

(B) Previously approved on September 22, 1972 in paragraph (c) of this section and now deleted without replacement, Rules 107, 109, 303, and 304.

(vii) Kings County APCD.

(A) Previously approved on September 22, 1972 and now deleted without replacement Rules 502 to 509, 511 to 517.

(B) Previously approved on September 22, 1972 in paragraph (c) of this section and now deleted without replacement, Rule 109.

(viii) Lassen County APCD.

(A) Previously approved on September 22, 1972 and now deleted without replacement Rules 1.5, 3.1, and 5.1 to 5.17.

(ix) Madera County APCD.

(A) Previously approved on September 22, 1972 and now deleted without replacement Rules 507 to 510 and 512 to 517.

(x) Merced County APCD.

(A) Previously approved on September 22, 1972 and now deleted without replacement Rules 502, 503, 506 to 510, and 512 to 517.

(B) Previously approved on September 22, 1972 in paragraph (c) of this section and now deleted without replacement, Rules 107, 301 (Paragraphs c to g, i, and j), 303, and 304.

(xi) Modoc County APCD.

(A) Previously approved on September 22, 1972 and now deleted without replacement Rules 1.5 and 4.1 to 4.17.

(B) Previously approved on September 22, 1972 in paragraph (c) of this section and now deleted without replacement, Rule 1.4.

(xii) San Joaquin County APCD.

(A) Previously approved on September 22, 1972 and now deleted without replacement Rules 502 and 506 to 509.

(B) Previously approved on September 22, 1972 in paragraph (c) of this section and now deleted without replacement, Rules 107 and 109.

(xiii) Stanislaus County APCD.

(A) Previously approved on September 22, 1972 and now deleted without replacement Rules 303, 304, 502, 505 to 510 and 512 to 517.

(B) Previously approved on September 22, 1972 in paragraph (c) of this section and now deleted without replacement, Rule 107.

(xiv) Tulare County APCD.

(A) Previously approved on September 22, 1972 and now deleted without replacement Rules 303, 304, 501, 502, 506 to 514, 516 to 518.

(B) Previously approved on September 22, 1972 in paragraph (c) of this section and now deleted without replacement, Rules 107 and 109.

(xv) San Bernardino County Air Pollution Control District.

(A) Previously approved on December 21, 1975 and now deleted without replacement Rule 68.

(xvi) Northern Sonoma County Air Pollution Control District.

(A) Previously approved on September 22, 1972 and now deleted without replacement Rules 56, 64, 64.1 and 64.2.

(B) Previously approved on September 22, 1972 in paragraph (c) of this section and now deleted without replacement, Rules 42 and 100.

(xvii) Los Angeles County Air Pollution Control District.

(A) Previously approved on September 22, 1972 and now deleted without replacement Rule 51.

(B) Previously approved on September 22, 1972 in paragraph (c) of this section and now deleted without replacement, Rules 43, 44, and Rule 120.

(xviii) Orange County Air Pollution Control District.

(A) Previously approved on September 22, 1972 and now deleted without replacement Rules 51, 67.1 and 68.

(xix) Riverside County Air Pollution Control District.

(A) Previously approved on September 22, 1972 and now deleted without replacement Rule 51.

(B) Previously approved on September 22, 1972 in paragraph (c) of this section and now deleted without replacement, Rules 43 and 44 (Mojave Desert AQMD only).

(xx) Mariposa County APCD.

(A) Previously approved on September 22, 1972 in paragraph (c) of this section and now deleted without replacement, Rule 17.

(xxi) Plumas County APCD.

(A) Previously approved on September 22, 1972 in paragraph (c) of this section and now deleted without replacement, Rules 3, 4, and 40.

(xxii) Sutter County APCD.

(A) Previously approved on September 22, 1972 in paragraph (c) of this section and now deleted without replacement, Rule 2.20.

(7) Information (Non-regulatory) regarding air quality surveillance submitted on July 19, 1972, by the Air Resources Board.

(8) Compliance schedules submitted on December 27, 1973, by the Air Resources Board.

(9) Compliance schedules submitted on February 19, 1974, by the Air Resources Board.

(10) Compliance schedules submitted on April 22, 1974, by the Air Resources Board.

(11) Compliance schedules submitted on June 7, 1974, by the Air Resources Board.

(12) Compliance schedules submitted on June 19, 1974, by the Air Resources Board.

(13) Compliance schedules submitted on September 4, 1974, by the Air Resources Board.

(14) Compliance schedules submitted on September 19, 1974, by the Air Resources Board.

(15) Compliance schedules submitted on October 18, 1974, by the Air Resources Board.

(16) Compliance schedules submitted on December 4, 1974, by the Air Resources Board.

(17) Compliance schedules submitted on January 13, 1975, by the Air Resources Board.

(18) Air quality maintenance area designations submitted on July 12, 1974, by the Governor.

(19)–(20) [Reserved]

(21) Revised regulations for the following APCD's submitted on July 25, 1973, by the Governor.

(i) Lassen County APCD.

(A) Appendix A (Implementation Plan for Agricultural Burning) and Appendix B (Enforcement).

(ii) Modoc County APCD.

(A) Rule 3:10A and Regulation V (Rules 5:1 to 5:7).

(iii) Siskiyou County APCD.

(A) Rules 2.13, 4.5, 4.12, 4.13, 4.14, and Implementation Plan for Agricultural Burning.

(iv) Bay Area APCD.

(A) Regulation 1.

(*1*) Division 1, Sections 1000–1010.

(*2*) Division 2, Section 2000.

(*3*) Division 3, Sections 3000–3004, 3100–3111, 3115–3118, 3120, and 3200–3500.

(*4*) Division 4.

(B) Regulation 4.

(*1*) Sections 1–2.

(C) Regulation 2.

(*1*) Division 1, Sections 1214 to 1214.3.

(D) Regulation 3.

(*1*) Division 1, Sections 1205 to 1205.3.

(v) Butte County APCD.

(A) Sections 1–1 to 1–35, 2–8, 2–10 to 2–11, 2A–1 to 2A–18, 3–2 to 3–2.1, 3–6, 3–9, 3–10.1, 3–11.1, 3.14, and 3.16.

(vi) San Diego County APCD.

(A) Rules 41, 55, 58, and 101–113.

(B) Previously approved on May 11, 1977 and now deleted without replacement Rule 41.

(C) Previously approved on May 11, 1977 and now deleted without replacement, Rule 55.

(D) Previously approved on May 11, 1977 in paragraph (c)(21)(vi)(A) of this section and now deleted Rules 105, 106, 107, 110, 111, and 112 (now replaced by Rule 101).

(vii) Tehama County APCD.

(A) Rules 1:2, 3:1–3, 3:3a, 3:3b, 3:4–3:5, 3:5a, 3:6–3:14, 4:6, and Implementation Plan for Agricultural Burning.

(B) Previously approved on May 11, 1977 and now deleted without replacement Rule 41.

(viii) Yuba County APCD.

(A) Rules 1.1, 2.1–2.2, 2.10, 4.11, and Agricultural Burning Regulations, Sections 1 to 6.

(B) Rule 4.5.

(ix) Kings County APCD.

(A) Rules 102, 105–108, 110, 404–406, 409, 417–I, II, IV, and 510.

(B) Rule 111.

(C) Previously approved on August 22, 1977 and now deleted without replacement Rule 510.

(D) Previously approved on August 22, 1977 in paragraph (c)(21)(ix)(A) of this section and now deleted without replacement, Rule 107.

(x) Colusa County APCD.

(A) Rule 6.5 and Amendment Number 3.

(B) Rule 4.4g.

(xi) Imperial County APCD.

(A) Agricultural Burning Implementation Plan (Rules 200–206).

(xii) Sacramento County APCD

(A) Rules 72, 90, 91, and 92.

(xiii) Ventura County APCD.

(A) Rules 2, 37, 56, 59, 60, and 101.

(xiv) Yolo-Solano APCD.

(A) New or amended Rules 1.2 (a, b, d to g, i to x, and z to ae), 1.4, 2.4(e), 2.8, 2.9, 4.1 to 4.5, 5.1 to 5.18, 6.1 (i) and (j), 6.2 to 6.5, and 6.7 to 6.8.

(B) Previously approved on June 14, 1978 and now deleted without replacement Rules 4.4, 4.5, 5.2, 5.3, 5.5, 5.7 to 5.9, and 5.13 to 5.17.

(xv) San Bernardino County APCD.

(A) New or amended Rules 5(a), 53A, 57, 57.1, 57.2.

(xvi) Santa Barbara County APCD.

(A) Rules 2(a, b, k, l, m, n, o, p, q, r, s, t, u, v, w), 40 [with the exception of 40(4)(m)].

(xvii) Calaveras County APCD.

(A) Rules 110 and 402(f).

(xviii) Los Angeles County APCD (Metropolitan Los Angeles portion).

(A) Amended Rule 45.

(B) Previously approved on September 8, 1978 in paragraph (c)(21)(xviii)(A) of this section and now deleted without replacement, Rule 45.

(22) Revised regulations for the following APCD's submitted on November 2, 1973 by the Governor's designee.

(i) Bay Area APCD.

(A) Regulation 2.

(*1*) Division 1, Section 1222.

(*2*) Division 3, Section 3211.

(*3*) Division 4, Section 4113.

(*4*) Division 8, Sections 8414–8416.

(*5*) Division 9, Sections 9613, 9615, 9711.3, and 9711.5.

(*6*) Division 11, Section 11101.

(23) Revised regulations for the following APCD's submitted on January 22, 1974 by the Governor's designee.

(i) Sacramento County APCD.

(A) Rule 30.

(ii) Santa Barbara County APCD.

(A) Rules 22, 24.1, 24.2.

(24) Revised regulations for the following APVD's submitted on July 19, 1974, by the Governor's designee.

(i) Sutter County APCD.

(A) Rule 1.3

(ii) Bay Area APCD.

(A) Regulation 1: (*1*) Sections 3112–3114, 3119 and 3122.

(iii) San Diego County APCD.

(A) Regulation IX.

(B) Rule 61.

(iv) Stanislaus County APCD.

(A) Rules 103, 108, 108.1, 113, 401, 402, 403, 404, 405, 409.1, 409.2, 418, 421, 505, 518, and 401.1.

(B) Rule 110.

(v) Tehama County APCD.

(A) Rules 3:14 and 4:18.

(B) Rule 4:17.

(vi) Shasta County APCD.

(A) Rules 1:1 to 1:2, 2:6(1.)(a), 2:6(1.)(b)(i–ii and iv–vii) 2:6(1.)(c)(i–vi), 2:6(1.)(d–e), 2:6(2–4), 2:7, 2:8(a–c), 2:9, 2:11, 2:14, 2:25, 3:1 to 3:9, 3:11 to 3:12, and 4:1 to 4:23.

(B) Rule 3:10.

(C) Previously approved on August 22, 1977 and now deleted without replacement Rules 4.2 to 4.4, 4.8 to 4.10, 4.15, and 4.23.

(D) Previously approved on August 22, 1977 in paragraph (c)(24)(vi)(A) of this section and now deleted without replacement, Rule 3.7.

(vii) Kern County APCD.

(A) Rules 102, 103, 108, 108.1, 110, 113, 114, 301, 305, 401, 404, 405, 407.3, 409, 411, 413, 414, 417–I and II, 504, 516, and 518

(B) Rule 111.

(C) Rules 601–615, except those portions pertaining to sulfur dioxide and the 12-hour carbon monoxide criteria levels.

(D) Previously approved on August 22, 1977 and now deleted without replacement Rule 516 (including Southeast Desert).

(E) Previously approved on August 22, 1977 and now deleted without replacement for implementation in the Southeast Desert Air Basin, Rule 404.

(viii) Sacramento County APCD.

(A) Rules 11, 39, 44, 70, 73, and 111.

(B) Rules 123 and 124, except those portions that pertain to the 12-hour CO criteria level.

(ix) Yolo-Solano APCD.

(A) Rule 2.22.

(B) New or amended Rules 1.2(c, h, and y), 1.3, 2.11 to 2.16, 2.19, 4.3, 5.4, 5.6, and 5.12.

(C) Previously approved on June 14, 1978 and now deleted without replacement Rules 5.6 and 5.12.

(x) Ventura County APCD.

(A) Rules 2, 3, 31, 32, 200, 203, and 204.

(B) Rule 32.

(C) Rules 70, 73.

(D) Rule 96.

(E) Rule 111.

(xi) Santa Barbara County Air Pollution Control District.

(A) Rules 150 to 152, 154 to 159, 160A, and 161 to 164, except those portions pertaining to nitrogen oxides, sulfur dioxide and the 12-hour carbon monoxide criteria levels.

(25) Revised regulations for the following APCD's submitted on October 23, 1974 by the Governor's designee.

(i) Fresno County APCD.

(A) Rules 102, 103, 108, 108.1, 111–114, 401, 404–406, 408, 409.1, 409.2, 416, 416.1a, b, c(2), c(3), d, e(2), and f, 505 and 518.

(B) Rule 110.

(C) New or amended Rules 402 (a to g), 416.1(c)(1), 416.1(e)(1), 416.1(e)(3), and 416.1(e)(4).

(D) Rules 601–615, except those portions pertaining to sulfur dioxide and the 12-hour carbon monoxide criteria levels.

(E) Previously approved on August 22, 1977 and now deleted without replacement Rule 505.

(ii) San Joaquin County APCD.

(A) Rules 102, 103, 108, 108.1, 108.2, 113, 305, 404–406, 407.2, 407.3, 408, 408.1, 409.1, 409.2, 410, 413, 414, 416, 416.1A to C, and D.3 to E., 417, 420, 420.1, 421, 504, 505, and 510–520.

(B) Rule 110.

(C) New or amended Rules 416.1 (D)(1) and (D)(2).

(D) Previously approved on August 22, 1977 and now deleted without replacement Rules 504, 505, 510, 512 to 518, and 520.

(iii) Lake County APCD.

(A) Parts II—V, Sections 3–7 of Part VI, Parts XI–XIII, Appendix A (Agricultural Burning Definitions A–M, Burning Regulations/Agricultural Burning (Farm) 1–9, /Farm 1–3, /Range 1–2), Appendix B (Parts I–II, Part IV–1, 2, 5, and 6, Part V–1, 4, 5 and 6, Parts VI–VII, Part VIII–1–7 and 9, Parts IX–X), Tables I–IV.

(iv) Tulare County APCD.

(A) Rules 102, 103, 108.1, 110, 112–114, 302, 401, 404–406, 407.3, 408, 410, 410.1, 410.2, 411, 420, 503–505, and 515.

(B) Previously approved on August 22, 1977 and now deleted without replacement Rules 503 to 505, 515, and 519.

(v) Ventura County APCD.

(A) Rules 2 and 125.

(vi) Santa Barbara County Air Pollution Control District.

(A) Rule 160B, except those portions pertaining to nitrogen oxides, sulfur dioxide and the 12-hour carbon monoxide criteria levels.

(vii) Monterey Bay Unified APCD.

(A) Rules 100 to 106, 300 to 303, 400 to 401, 403, 404(a)(b)(d), 405 to 408, 412 to 417, 419 to 420, 500 to 508, 600 to 616, and 800 to 816.

(B) Previously approved on October 27, 1977 in paragraph (c)(25)(vii)(A) of this section and now deleted without replacement, Rules 302 and 303.

(26) Revised regulations for the following APCD's submitted on January 10, 1975, by the Governor's designee.

(i) Sutter County APCD

(A) Rule 4.1

(ii) Bay Area APCD

(A) Regulation 2: (*1*) Sections 2018.1–2.

(B) Regulation 7.

(C) Regulation 8.

(D) Previously approved on May 11, 1977 in paragraph (c)(26)(ii)(B) of this section and now deleted without replacement, Regulation 7.

(iii) Butte County APCD.

(A) Sections 3–11, 3–12, and 3–12.1.

(iv) Glenn County APCD.

(A) Sections 2, 3.1, 10–14.3, 16, 17, 21, 21.1, 24, 57, 58, 81, 85, 86, 95.1, 118, 122.1–122.3, 154 and 155.

(B) Rules 95.2 and 95.3.

(C) Previously approved on May 11, 1977 and now deleted without replacement Rules 118 and 122.1 to 122.3.

(D) Previously approved on May 11, 1977 in paragraph (c)(26)(iv)(A) of this section and now deleted without replacement, Rule 155.

(E) Previously approved on August 22, 1977 in paragraph (c)(26)(iv)(A) of this section and now deleted without replacement, Rule 3.1.

(v) Yuba County APCD.

(A) Agricultural Burning Regulations, sections 1 and 3.

(vi) Colusa County APCD.

(A) Rules 6.2 and 6.4.d. (1–2).

(vii) Fresno County APCD.

(A) Rules 409, 417, 503, 507, 513, and 515.

(B) Previously approved on August 22, 1977 and now deleted without replacement Rules 503, 507, 513, and 515.

(viii) Mariposa County APCD.

(A) Rules 101, 102, 201, 202, 203 (a–f, h, i, and k), 204–216, 301–303, 305–306, 308–313, 315–323, 401–403, 405–409, and 600–618.

(B) Rule 203(j).

(C) Previously approved on August 22, 1977 and now deleted without replacement Rules 601, 602, 604 to 609, 611 to 616, and 618.

(ix) Sierra County APCD.

(A) Rules 101, 102, 201–216, 301–323, 405–409, 601–620, 6, 27, 29, and 51–56.

(B) Previously approved and now deleted, Rule 102.

(x) Shasta County APCD.

(A) Rules 2:6(5)(b), 3:1, 3:2, 4:6, and 4:14.

(xi) Tulare County APCD.

(A) Rules 417 and 417.1a. thru d., e.2., and f.

(B) New or amended Rules 417.1 (e)(1), (e)(3) and (e)(4).

(xii) Kern County APCD.

(A) Rules 410 and 503.

(xiii) Madera County APCD.

(A) Rules 102, 103, 105, 108, 112–114, 301, 305, 401, 402, (a–e, and g), 404–406, 407.2, 407.3, 408, 409, 409.1 409.2, 412, 416, 416.1a, b, c(2), c(3), d, e(2), f, 504, 505, and 518.

(B) Rule 402(f).

(C) Rule 110.

(D) New or amended Rules 416.1 (c)(1), (e)(1), (e)(3), and (e)(4).

(xiv) Yolo-Solano APCD.

(A) New or amended Rule 6.1 (a), (b), (c), (d), (e), and (g) (1, 2, and 3).

(xv) Monterey Bay Unified APCD.

(A) Rules 49 to 411 and 421.

(xvi) Plumas County APCD.

(A) Rule 203(j).

(B) New or amended Rules 101, 102, 201, 202, 204, 206, 209, 210(a), 214, 216, 216–49, 216–50, 216–51, 216–54, 216–55, 216–56, 216–1, 216–2, 216–3, 305, 306, 309, 310, 311, 312, 313, 314, 315, 316, 317, 318, 401, 403, 405, 406, 408, 701, 702, 704, 705, 706, 707, 708, 709, 711, 712, 713, 714, 715, 716, 717.

(C) Previously approved and now deleted (without replacement) Rules 51.7, 57.5, 62, 70.

(D) Previously approved on June 14, 1978 and now deleted without replacement Rules 705 to 709.

(E) Previously approved and now deleted, Rule 102.

(xvii) Placer County APCD.

(A) New or amended Rules 102, 105, 201, 202, 204, 209, 312, 403, 405, 406, 701, 705, 707, 711, 712, 713, 714, 716, 717.

(B) Previously approved on June 14, 1978 and now deleted without replacement Rules 701, 707, 711 to 714, and 716 (Mountain Counties Air Basin).

(C) Previously approved on June 14, 1978 and now deleted without replacement Rules 701, 705, 707, 711 to 714, and 716 (Lake Tahoe Air Basin).

(D) Previously approved on June 14, 1978 in paragraph (c)(26)(xvii)(A) of this section and now deleted without replacement, Rule 105.

(27) Revised regulations for the following APCD's submitted on April 10, 1975, by the Governor's designee.

(i) Stanislaus County APCD.

(A) Rule 409.

(ii) Tehama County APCD.

(A) Rule 4:6.

(iii) Sacramento County APCD.

(A) Rules 12, 22a, 22b, 25, 32–34, and 40.

(iv) Bay Area APCD.

(A) Regulation 2, section 1302.2 and section 1302.22.

(B) Rules 32, 33, 34, 38, 40.

(v) San Bernardino County APCD.

(A) New or amended Rule 73.

(vi) Riverside County APCD.

(A) New or amended Rule 57.

(vii) Nevada County APCD.

(A) New or amended Rules 101, 102, 105, 106, 107, 201, 202, 203 [with exception of (g)], 204, 206, 208, 209, 210(a), 212, 214, 215, 301, 302, 303, 305, 306, 307, 308, 309, 310, 311, 312, 313, 314, 315, 316, 317, 318, 322, 401, 403, 405, 406, 408, 601, 602, 701, 702, 703, 705, 706, 707, 708, 709, 711, 712, 713, 714, 715, 716, 717.

(B) Previously approved on June 14, 1978 and now deleted without replacement Rules 701 to 703, 705 to 709, and 712 to 716.

(C) Previously approved and now deleted, Rule 102.

(D) Previously approved on June 14, 1978 in paragraph (c)(27)(vii)(A) of this section and now deleted without replacement, Rules 105, 601, and 602.

(viii) El Dorado County APCD.

(A) New or amended Rules 101, 102, 202, 204, 206, 209, 210(a), 212, 214, 301, 305, 306, 309, 310, 311, 312, 313, 315, 316, 317, 318, 323, 401, 403, 405, 406, 408, 601, 602, 701, 702, 704, 705, 706, 707, 708, 709, 711, 712, 713, 714, 715, 716, 717.

(B) Previously approved and now deleted (without replacement) Rules 5, 6, 7.

(C) Previously approved on June 14, 1978 in paragraph (c)(27)(viii)(A) of this section and now deleted Rule 101.

(D) Previously approved on June 14, 1978 in paragraph (c)(27)(viii)(A) of this section and now deleted without replacement, Rules 323, 601, and 602.

(ix) [Reserved]

(x) Santa Barbara County APCD.

(A) Rules 32, 36, 36.3, 36.4, 36.5, 37, 38.

(28) Revised regulations for the following APCD's submitted on July 22, 1975, by the Governor's designee.

(i) Sutter County APCD

(A) Rules 1.2, 2.82, and 4.11.

(ii) San Diego County APCD.

(A) Rule 66.

(iii) Yuba County APCD

(A) Rule 1.1.

(iv) Calaveras County APCD.

(A) Rules 102, 201–215, 301–323, 401–403, 405–408, 409 (Public Records), 601–604, 700–717, 105, 106, 110, 407(b), 409 (Organic Solvents), 409.1 (Architectural Coatings), 409.2 (Disposal and Evaporation of Solvents), 412, and 413.

(B) Previously approved on August 22, 1977 and now deleted without replacement Rules 701, 704 to 709, 711 to 714, and 716.

(v) Tuolumne County APCD.

(A) Rules 102, 201, 202, 203, (a–f, h, i, and k), 204–216, 301–303, 305–306, 308–313, 315–323, 400–403, 405–408, 409 (Public Records), 600–618, 105–110, 301–304, 409 (Fuel Burning Equipment, Oxides of Nitrogen), 410, and 412–414.

(vi) Kings County APCD.

(A) Rule 410.

(vii) Shasta County APCD.

(A) Rule 2.8(e).

(viii) Kern County APCD.

(A) Rules 115, 407.1, 422, and 423.

(B) Previously approved on August 22, 1977 in paragraph (c)(28)(viii)(A) of this section and now deleted without replacement, Rules 422 and 423.

(ix) Sacramento County APCD.

(A) Rule 93.

(x) Riverside County APCD.

(A) New or amended Rule 53.

(xi) Orange County APCD (Metropolitan Los Angeles portion).

(A) Amended Rule 53.

(29) Revised regulations for the following APCD's submitted on November 3, 1975 by the Governor's designee.

(i) Lake County APCD.

(A) Part III, Number 59a.

(ii) Sacramento County APCD.

(A) Rules 13 and 14.

(B) Rules 71, 112, and 113.

(iii) Monterey Bay Unified APCD.

(A) Rule 418.

(iv) Bay Area APCD.

(A) Regulation 2, section 1302.21 and section 1302.23.

(v) San Diego County.

(A) Rule 63.

(B) Rules 112, 113.

(vi) Ventura County APCD.

(A) Rules 65, 66, 72, and 73.

(B) Previously approved on August 15, 1977 and now deleted without replacement Rules 65 and 66.

(C) Previously approved on August 15, 1977 in paragraph (c)(29)(vi)(A) of this section and now deleted without replacement, Rule 72 (72–72.8).

(30) Revised regulations for the following APCD's submitted on February 10, 1976 by the Governor's designee.

(i) Bay Area APCD

(A) Regulation 1: (*1*) Section 3121.

(B) Regulation 6.

(ii) Butte County APCD

(A) Section 3–11.2

(iii) Yuba County APCD.

(A) Agricultural Burning Regulations, sections 1 and 3.

(iv) Colusa County APCD.

(A) Rule 6.6A.I and 6.6A.II–1. (a–f).

(v) Fresno County APCD.

(A) Rules 115, 422, 423, and 407.

(B) Previously approved on August 22, 1977 in paragraph (c)(30)(v)(A) of this section and now deleted without replacement, Rules 422 and 423.

(vi) San Joaquin County APCD.

(A) Rules 114, 401, 402, 407.1, 409, 411, 422 and 423.

(B) Previously approved on August 22, 1977 in paragraph (c)(30)(vi)(A) of this section and now deleted without replacement, Rules 422 and 423.

(C) Rule 411.1 and 411.2.

(vii) Lake County APCD.

(A) Table V.

(viii) Sacramento County APCD.

(A) Rules 94–97.

(ix) Ventura County APCD.

(A) Rules 70 and 71.

(x) Southern California APCD.

(A) New or amended Rules 501, 502, 506, 507, 508, 509, 511, 512, 513, 514, 515, 516, 517, 518, 801, 803, 804, 807, 808, 809, 810, 811, 813, 814, 815, 817.

(B) Previously approved on June 14, 1978 and now deleted without replacement Rules 501, 502, 506 to 509, 511 to 518, 801, 803 to 804, 807 to 811, 813 to 815, and 817.

(xi) Santa Barbara County APCD.

(A) Rule 32.1.

(31) Revised regulations for the following APCD's submitted on April 21, 1976, by the Governor's designee.

(i) Great Basin Unified APCD.

(A) [Reserved]

(B) Rules 100 to 107, 215, 300 to 303, 400 to 402, 404 to 413, 416 to 421, 500 to 501, 600 to 616, and 800 to 817.

(C) Alpine County APCD: Rules 1.4, 3.1, 4.2–1, 4.7, 4.7–1, 4.8, 4.10, 4.11, and 5.18.

(D) Inyo County APCD: Rules 1.3, 3.1, 4.1, 4.10, 4.11, 4.12, and 5.1.

(E) Mono County APCD: Rules 1.4, 3.1, 4.2–1, 4.7, 4.7–1, 4.8, 4.10, 4.11, 5.1, and 5.18.

(F) Previously approved on June 6, 1977 and now deleted without replacement Rules 600 to 615 and 800 to 817.

(G) Previously approved on June 6, 1977 in paragraph (c)(31)(i)(B) of this section and now deleted without replacement, Rules 105, 302, and 303.

(ii) Sutter County APCD

(A) Rule 4.1

(iii) San Diego County APCD.

(A) Rule 5.

(B) Previously approved on May 11, 1977 in paragraph (c)(31)(iii)(A) of this section and now deleted without replacement, Rule 5.

(iv) Glenn County APCD

(A) Sections 14.3 and 15.

(v) Kings County APCD.

(A) Rule 411.

(B) Rules 412 and 412.1.

(vi) Southern California APCD.

(A) Rules 461 and 462.

(B) New or amended Rules 103, 104, 105, 106.

(C) Rules 201–207, 209–212, 214–217, and 219.

(D) Previously approved on November 9, 1978 and now deleted without replacement Rule 211.

(E) Previously approved on June 14, 1978 in paragraph (c)(31)(vi)(B) of this section and now deleted without replacement, Rule 105.

(vii) Santa Barbara County APCD.

(A) Rule 35.1 and 35.2.

(B) Rule 2(x).

(C) Rule 63, except those portions pertaining to sulfur dioxide and the 12-hour carbon monoxide criteria levels.

(viii) Fresno County APCD.

(A) Rule 411 and 411.1.

(ix) Kern County APCD.

(A) Rule 412 and 412.1.

(x) Stanislaus County APCD.

(A) Rule 411 and 411.1.

(xi) Tulare County APCD.

(A) Rule 412 and 412.1.

(xii) Madera County APCD.

(A) Rule 411.1 and 411.2.

(xiii) Ventura County APCD.

(A) Rules 2, 4, 36, 40, 41, 42, 43, 104, 201, and 202.

(B) Previously approved on August 15, 1977 and now deleted without replacement Rule 43.

(xiv) Yolo-Solano APCD.

(A) New or amended Rules 6.1(f) (1 and 2), (g)(4), (h) (1 and 2) and 6.6.

(xv) Nevada County APCD.

(A) Amended Rule 211.

(xvi) Bay Area APCD.

(A) Regulation 2, section 3212.

(B) Regulation 3, section 3203.

(xvii) [Reserved]

(xviii) Amador County APCD.

(A) Rule 404.

(B) New or amended Rules 101, 102, 104, 105, 106, 107, 201, 202, 204, 206, 207.1, 209, 210(A), 211, 212, 213.2, 213.3, 214, 305, 307, 308, 312, 401, 402, 403, 405, 406, 408, 409, 601, 602, 603, 702, 704, 705, 706, 707, 708, 709, 711, 712, 713, 714, 715, 716, 717.

(C) Previously approved and now deleted (without replacement) Rules 18.1 (Regulation V), 22 (Regulation V).

(D) Previously approved on January 24, 1978 and now deleted without replacement Rules 705 to 709 and 712 to 716.

(E) Previously approved on January 24, 1978 and now deleted without replacement Rules 213.2 and 213.3.

(F) Previously approved on June 14, 1978 in paragraph (c)(31)(xvii)(B) of this section and now deleted without replacement, Rule 105.

(32) Revised regulations for the following APCD's submitted on August 2, 1976 by the Governor's designee.

(i) Bay Area APCD.

(A) Regulation 2: (*1*) Sections 2022.1–2, 2035.1, 3211.1, and Divisions 16–18.

(ii) Stanislaus County APCD.

(A) Rules 102, 104, 105, 111, 112, 114, 301, 305, 407.1, 416, 416.1, 422, 423, 501, 504, and 511.

(B) Previously approved on August 22, 1977 and now deleted without replacement Rules 501, 404, and 511.

(C) Previously approved on August 22, 1977 in paragraph (c)(32)(ii)(A) of this section and now deleted without replacement, Rules 104, 105, 112, 422, and 423.

(iii) Merced County APCD.

(A) Rules 411 and 411.1.

(B) Rule 109.

(C) New or amended Rules 102, 103, 103.1, 104, 105, 108.1, 110 to 115, 302, 401, 404, 405, 407.1, 408.1, 408.2, 409, 409.1, 409.2, 410, 412, 416, 416.1[(I), (II) (A–L), (II) (N–O), (III), (IV), (V), and (VI)], 421(a), 501, 504, 505, 511, and 518.

(D) Previously approved and now deleted (without replacement) Rules 102(hh) and 102(ii).

(E) Previously approved on June 14, 1978 and now deleted without replacement Rules 105, 501, amd 504.

(F) Previously approved on June 14, 1978 in paragraph (c)(32)(iii)(C) of this section and now deleted without replacement, Rule 302.

(iv) Southern California APCD.

(A) New or amended Rules 403, 404, 405, 407, 408, 409, 432, 441, 443, 464, 465, 467, 470, 471, 472, 473, 504, 505, 510, 802, 805, 806, 812, 816.

(B) Previously approved and deleted (without replacement).

(*1*) Los Angeles County APCD Rules 53.1, 55.

(*2*) San Bernardino County APCD Rules 50, 51.

(*3*) Riverside County APCD Rule 55.

(*4*) Orange County APCD Rule 55.

(C) Rules 202 and 219.

(D) Previously approved on June 14, 1978 and now deleted without replacement Rules 504, 505, 510, 802, 805, 806, 812, and 816.

(E) Previously approved on June 14, 1978 and now deleted without replacement.

(*1*) Los Angeles County APCD Rule 505.

(*2*) Riverside County APCD Rule 505.

(*3*) San Bernadino County APCD Rule 505.

(F) Previously approved on June 14, 1978 and now deleted without replacement Rule 432.

(v) Plumas County APCD.

(A) Amended Rule 324.

(vi) El Dorado County APCD.

(A) Amended Rule 211.

(33)–(34) [Reserved]

(35) Revised regulations for the following APCDs submitted on November 10, 1976 by the Governor's designee.

(i) Sacramento County APCD.

(A) Rules 1, 2, 11, 12, 21, 22a, 22b, 24, 25, 27, 28, 29, 33, 39, 44, 70, 71, 90, 92, 93, 94, 95, 96, 97, 98, and definitions list addition to Regulation VII.

(B) Rule 14.

(ii) Southern California APCD.

(A) Rule 461.

(iii) Ventura County APCD.

(A) Rule 70.

(B) Rules 2, 57, 72, and 73 and Regulation VII (Rules 110–129).

(C) Previously approved on August 15, 1977 and now deleted without replacement Rules 115 to 119, 122, and 128 to 129.

(D) Previously approved on August 15, 1977 in paragraph (c)(35)(iii)(B) of this section and now deleted without replacement, Rules 72 (72.9–72.10) and 73.

(iv) Santa Barbara County APCD.

(A) Rule 35.2.

(v) San Joaquin County APCD.

(A) Rules 102, 103, 103.1, 104, 105, 111, 112, 301, 305, 402, 416.1, 501, 504, 511.

(B) Previously approved on October 4, 1977 and now deleted without replacement Rule 501.

(C) Previously approved on October 4, 1977 in paragraph (c)(35)(v)(A) of this section and now deleted without replacement, Rules 104, 105, and 112.

(vi) Tulare County APCD.

(A) Rules 102, 103, 103.1, 104, 105, 110, 112, 115, 305 (402 paragraphs a. through e. and g.), 405, 407.1, 407.3, 409, 417.1, and 421.

(B) Rules 111 and 402(f).

(C) Previously approved on September 21, 1976 and now deleted without replacement Rules 105 and 305.

(vii) Fresno County APCD.

(A) Rules 407 and 408.

(viii) Imperial County APCD.

(A) Rules 100, 114.5, 131.5, and 148.D(3).

(ix) Del Norte County APCD.

(A) Rule 540.

(B) [Reserved]

(C) New or amended Rules 100, 110, 120, 130, 150, 160 (except 160(a) and noncriteria pollutants), 190, 240(d) (except paragraph (3)), 300, 310, 320, 340, 400(b), 410(a), 410(c), 420, 430, 440, 470, 480, 482, 500, 510, 520, 600, 610, 620, 630, 640, and 650; and the following portions of Regulation 2: General prohibitions (all of page 1), Articles I and II, paragraphs A1, A2, A3, A4, 5, 7, and 8 of Article III, and Articles IV to VII.

(x) San Diego County APCD.

(A) Rules 2(k), 3, 50, 52, 53, 60, 62.

(xi) Monterey Bay Unified APCD.

(A) Rules 101, 104, 106, 214, 301, 404(c), 406, 407, 415, 601 to 603, 609, 801, 805, and 811.

(xii) San Luis Obispo County APCD.

(A) New or amended Rules 101 *Title*, 102, 103, 105(A)(2) through 105(A)(46), 106, 108, 109, 110 *Enforcement*, 111, 401, 403, 405, 408, 409, 410, 801, 802, 803, 804,

805, 806, 807, 808, 809, 810, 811, 812, 813, 814, 815, 816, 817.

(B) Rule 107.

(C) Rules previously approved and now deleted (without replacement) 101(1)(b), 101(2), 101(3), and 101(4) *Effective Date*, 110 *Prohibitions*, 116(1), 116(3), 119(1) and 119(4).

(D) Amended Rules 501 and 502 (sections A–F, H–I, K–N, O(1), P–Q).

(E) New or amended Rules 202, 205, 206, 207, 208, 209, 210, and 211.

(F) Previously approved on August 4, 1978 and now deleted without replacement Rules 801 to 817.

(G) Previously approved on August 4, 1978 and now deleted without replacement Rules 102 and 408.

(H) Previously approved on August 4, 1978 in paragraph (c)(35)(xii)(A) of this section and now deleted without replacement, Rules 110 and 111.

(xiii) Kern County APCD.

(A) New or amended Rules 102, 102(d), 102(oo), 103, 103.1, 104 to 105, 110, 112, 301(f), 305(a), 402 (c) and (e), 417(I)(A), 417(II)(B)(L), 501, and 511.

(B) Rule 504.

(C) Previously approved on March 22, 1978 and now deleted without replacement Rules 105, 501, 504, and 511 (including Southeast Desert).

(D) Previously approved on March 22, 1978 in paragraph (c)(35)(xiii)(A) of this section and now deleted without replacement, Rule 104.

(xiv) Humboldt County APCD.

(A) Rule 540.

(B) [Reserved]

(C) New or amended Rules 100, 110, 120, 130, 150, 160 (except 160(a) and noncriteria pollutants), 190, 240(d) (except paragraph (3)), 300, 310, 320, 340, 400(b), 410(a), 410(c), 420, 430, 440, 470, 480, 482, 500, 510, 520, 600, 610, 620, 630, 640, and 650; and the following portions of Regulation 2: General prohibitions (all of page 1), Articles I and II, paragraphs A1, A2, A3, A4, 5, 7, and 8 of Article III, Articles IV to VII, and Appendix A.

(D) Previously approved and now deleted (without replacement) Rules 5, 6, 80, 87, and 95.

(E) Previously approved on August 2, 1978 and now deleted without replacement Rules 340, 510, and 620 to 650.

(xv) Mendocino County APCD.

(A) Rule 540.

(B) [Reserved]

(C) New or amended Rules 100, 110, 120, 130, 150, 160 (except 160(a) and noncriteria pollutants), 190, 300 (except paragraph (a)), 310, 340, 400(b), 410(b), 410(c), 430, 440, 460, 470, 480, 482, 500, 510, 520, 600, 610, 620, 630, 640, and 650; and the following portions of regulation 2: General prohibitions (all of page 1), Articles I and II, paragraphs A1, A2, A3, A4, 5, 7, and 8 of Article III, Articles IV and V, Article VI(a) to (i), Article VII, and Appendices B and C.

(D) Previously approved and now deleted (without replacement) Parts IV, V–5–B, VI–1, and VI–4.

(E) Previously approved on November 7, 1978 and now deleted without replacement Rules 510, 620, 640, and 650.

(F) Previously approved on November 7, 1978 in paragraph (c)(35)(xv)(C) of this section and now deleted without replacement, Rules 340.

(xvi) Northern Sonoma County APCD.

(A) Rule 540.

(B) New or amended Rules 100, 110, 120, 130, 150, 160, (except 160(a) and noncriteria pollutants), 190, 300, 310, 320, 340, 400(b), 410(a), 410(c), 420, 430, 440, 470, 480, 482, 500, 510, 520, 600, 610, 620, 630, 640, and 650; and the following portions of Regulation 2: General prohibitions (all of page 1), Articles I and II, paragraphs A1, A2, A3, A4, 5, 7, and 8 of Article III, Articles IV and V, paragraphs (a) to (i) of Article VI, and Article VII.

(C) Previously approved on August 16, 1978 and now deleted without replacement Rules 340, 510, 600, 610, 620, 630, 640, and 650.

(xvii) Trinity County APCD.

(A) Rule 540.

(B) [Reserved]

(C) New or amended Rules 100, 110, 120, 130, 150, 160 (except 160(a) and noncriteria pollutants), 190, 240(d) except paragraph (3)), 300, 310, 320, 340, 400(b), 410(a), 410(c), 420, 430, 440, 470, 480, 482, 500, 510, 520, 600, 610, 620, 630, 640, and 650; and the following portions of regulation 2: General prohibitions (all of page 1), articles I and II, paragraphs A1, A2, A3, A4, 5, 7 and 8 of article III, articles IV and V, paragraphs (a) to (i) of article VI, and article VII.

(D) Previously approved on August 2, 1978 and now deleted without replacement Rules 340, 510, and 620 to 650.

(36) Revised regulations for the following APCD were submitted on November 19, 1976, by the Governor's designee.

(i) Southern California APCD.

(A) Rules 213, 213.1, and 213.2.

(B) Previously approved on November 9, 1978 and now deleted without replacement Rule 213, 213.1, and 213.2.

(37) Revised regulations for the following APCD's submitted on February 10, 1977, by the Governor's designee.

(i) Southern California APCD.

(A) New or amended Rules 102, 468, 469, 474, 475, 476.

(B) Rule 430.

(C) Amended Rule 431.

(ii) San Diego County APCD.

(A) Rule 68.

(iii) San Luis Obispo County APCD.

(A) Rule 112, and Rules 404(A) through 404(B)(1)(a), 404(B)(1)(c), 404(B)(2), 404(B)(3), 404(B)(4), 404(c), 404(D), and 404(E).

(iv) Lake County APCD.

(A) Rules 500, 510, and 511.

(B) New or amended sections 100, 200 to 205.1, 207 to 234, 236, 238 to 260, 300, 301, 400, 401, 402 (A to E, and G), 410, 411, 412 (A and C), 430 to 439, 520, 530 to 533, 800, 900 to 902, 1000 to 1003, 1100, 1200, 1300, 1400, 1500, 1600, 1601, 1610, 1611, 1612, 1620, 1700, 1701, 1710 to 1714, 1720 to 1725, 1730, 1731 to 1736, and tables I, II, III, IV, and V.

(C) Previously approved and now deleted (without replacement) part II; sections 9, 15, 18, 28, 42, 43, 49a, 49b, 50, 52, and 54 of part III; sections 1 to 4 of part IV; section (1)(B) of part V; and parts IV and VI of Appendix B.

(D) Previously approved on August 4, 1978 and now deleted without replacement Rules 300, 800, 1600, 1601, 1610 to 1612, 1620, 1700 to 1701, 1710 to 1714, 1720 to 1725, 1730 to 1736, and Tables I to V.

(E) Previously approved on August 4, 1978 in paragraph (c)(37)(iv)(B) of this section and now deleted without replacement, Rules 531, 901, and 1500.

(v) Tuolumne County APCD.

(A) Rule 404.

(B) New or amended Rules 102, 202, 203, 206, 207, 208, 209, 213, 215, 216, 217, 301, 302, 303, 304, 308, 319, 321, 322, 323, 324, 402, 407, 409, 601, 602, 603, 604, 605, 700, 701, 702, 703, 704, 705, 706, 707, 708, 709, 710, 711, 712, 713, 714, 715, 716, and 717 and rescinded Rules 413 and 414.

(C) Previously approved on December 6, 1979 and now deleted without replacement Rules 601 to 605, 700 to 704, and 705 to 716.

(D) Previously approved on December 6, 1979 in paragraph (c)(37)(v)(B) of this section and now deleted without replacement, Rules 216, 323, and 324.

(38) Revisions to air pollution emergency episode plans submitted on June 1, 1977 by the Governor's designee.

(i) South Coast Air Quality Management District's Regulation VII Emergencies as revised on May 6, 1977. No action has been taken on those portions of Rules 702, 703, 704, 706, 708, 708.2, 710, 711, 712 and 714 that pertain to sulfate, oxidant in combination with sulfate, or oxidant in combination with sulfur dioxide. No action has been taken on Rules 708.2(b)(3)(B), 708.2(b)(4)(B), 708.2(b)(4)(C) and 708.2(b)(5)(C).

(39) Revised regulations for the following APCDs submitted on June 6, 1977, by the Governor's designee.

(i) Great Basin Unified APCD.

(A) Rule 403.

(ii) San Bernardino County APCD (Southeast Desert portion).

(A) Rule 430.

(B) Rules 201–207, 209–212, 213, 213.1, 213.2, 214–217, and 219.

(C) New or amended Rules 104, 106, 208, 218, 401, 403, 53–A(a), 407 to 409, 431, 432, 441 to 443, 464 to 470, 472, 473, 475, 476, 503 to 508, 510 to 518, 801 to 817.

(D) [Reserved]

(E) Rules 703, 704 (except those portions that pertain to the criteria levels for carbon monoxide and sulfur dioxide), 705, 706, 707, 708, 709, 710, 711, 713, and 714.

(F) Previously approved on September 8, 1978 and now deleted without replacement Rules 503 to 508, 510 to 516, 518, and 801 to 817.

(G) Previously approved on September 8, 1978 and now deleted without replacement Rules 466 and 467.

(iii) Los Angeles County APCD (Southeast Desert portion).

(A) Rule 430.

(B) Rules 201–207, 209–212, 213, 213.1, 213.2, 214–217, and 219.

(C) New or amended Rules 101, 102, 2, 103 to 106, 208, 218, 301, 42, 401, 403 to 405, 407 to 409, 431, 432, 441 to 444, 461, 463 to 476, 502 to 518, 801 to 817.

(D) Deleted without replacement Rule 53.1, and Regulation VI—Orchard or Citrus Grove Heaters.

(E) Rules 701, 702, 703, 704 (except those portions that pertain to the criteria levels for carbon monoxide and sulfur dioxide), 705, 706, 707, 708, 709, 710, 711, 712, 713, 714, and 715.

(F) Previously approved on September 8, 1978 and now deleted without replacement Rules 502 to 516, 518, and 801 to 817.

(G) Previously approved on September 8, 1978 in paragraph (c)(39)(iii)(C) of this section and now deleted without replacement, Rules 42 and 105.

(iv) Riverside County APCD (Southeast Desert portion).

(A) Rule 430.

(B) Rules 201–207, 209–212, 213, 213.1, 213.2, 214–217 and 219.

(C) New or amended Rules 103, 104, 208, 218, 301, 42, 401, 403 to 405, 53, 56, 407 to 409, 431, 432, 441 to 444, 463 to 476, 73, 503 to 518, 801 to 817.

(D) Deleted without replacement Regulation V—Orchard, Field or Citrus Grove Heaters.

(E) Rules 702, 703, 704 (except those portions that pertain to the criteria levels for carbon monoxide and sulfur dioxide), 705, 706, 707, 708, 709, 710, 711, 712, 713, 714, and 715.

(F) Previously approved on September 8, 1978 and now deleted without replacement Rules 503 to 516, 518, and 801 to 817.

(G) Previously approved on September 8, 1978 in paragraph (c)(39)(iv)(C) of this section and now deleted without replacement, Rules 42 and 301.

(v) Yolo-Solano APCD.

(A) Amended Rule 2.21.

(vi) South Coast Air Quality Management District.

(A) Amended Rule 461.

(B) Amended Rule 431.

(vii) Mariposa County APCD.

(A) New or amended Rules 102(B), 102(E), 102(S), 102(II), 102(SS), 203 (with the exception of (D)), 206(B), 207, 208, 211, 215, 216, 301, 302, 303, 304, 308, 319, 320, 321, 322, 324, 402, 404, 407, 507, 514, 600, 603, and 610.

(B) Previously approved and now deleted (without replacement) Rule 203(k).

(C) Previously approved on June 6, 1977 and now deleted without replacement Rules 600, 603, and 610.

(D) Previously approved on August 16, 1978 in paragraph (c)(39)(vii)(A) of this section and now deleted without replacement, Rules 216 and 402.

(viii) Sierra County APCD.

(A) New or amended Rules 102(B), 102(E), 102(S), 102(II), 102(SS), 203 (with the exception of (D) and (G)), 206(B), 207, 208, 211, 215, 216, 301, 302, 303, 308, 319, 320, 321, 322, 324, 402, 404, 407, 409, 507, 514, 516, 600 to 617.

(B) Previously approved and now deleted (without replacement) Rules 203(j) and 620.

(C) Previously approved on September 14, 1978 and now deleted without replacement Rules 601 to 602, 604 to 609, and 611.

(D) Previously approved and now deleted, Rule 102.

(ix) Plumas County APCD.

(A) New or amended Rules 102(B), 102(E), 102(S), 102(II), 102(SS), 203 (with the exception of (D) and (G)), 206(B), 207, 208, 211, 215, 216, 301, 302, 303, 304, 307, 308, 319, 320, 321, 322, 324, 402, 404, 407, 409, 507, 514, 602 to 605, 700, 703, and 710.

(B) Previously approved on September 14, 1978 and now deleted without replacement Rules 602 to 605, 700, and 710.

(C) Previously approved and now deleted, Rule 102.

(x) Nevada County APCD.

(A) New or amended Rules 102(B), 102(E), 102(S), 102(II), 102(SS), 103, 104, 203(e and i), 206(B), 207, 216, 304, 319, 320, 321, 402, 407, 409, 507, 514, 700, 703(E and I), 704, 710 and 711(A).

(B) Previously approved on September 14, 1978 and now deleted without replacement Rules 704, 710, and 711(A).

(C) Previously approved and now deleted, Rule 102.

(D) Previously approved on September 14, 1978 in paragraph (c)(39)(x)(A) of this section and now deleted without replacement, Rule 402.

(40) [Reserved]

(41) Revised regulations for the following APCD's submitted on October 13, 1977, by the Governor's designee.

(i) Kings County APCD.

(A) New or amended Rules 412 and 412.2.

(ii) San Diego County Air Pollution Control District.

(A) New or amended Rules 2(b), 2(t), 2(u), 2(v), 2(w), 3, 19.2, 40, 42, 50, 52, 53, 54, 61.5, 64, 65, 66, 68, 71, 76, 77, 85, 95, 96, 101(f), 102(d), 102(e), 103(d), 103(g), 104, 109, and 177.

(*1*) Rule 65 is now removed without replacement as of March 14, 1989.

(B) Previously approved and now deleted (without replacement) Rule 113.

(C) Regulation VIII, Rules 126–138 and Appendix A, except as these rules apply to the 12-hour carbon monoxide episode criteria specified in Rule 127.

(D) Previously approved on August 31, 1978 and now deleted without replacement Rules 77, 85, and 96.

(E) Previously approved on August 31, 1978 and now deleted without replacement Rule 3.

(F) Previously approved on August 31, 1978 in paragraph (c)(41)(ii)(A) of this section and now deleted Rule 104 (now replaced by Rule 101).

(iii) Bay Area APCD.

(A) New or amended rules: Regulation 1, section 3121 and Regulation 2, sections 3210.5 to 3210.11.

(iv) Ventura County APCD.

(A) New Rule 105.

(v) Kern County APCD.

(A) Rule 108.

(vi) San Luis Obispo County APCD.

(A) New Rule 113.

(vii) Monterey Bay Unified APCD.

(A) New Rules 215, 422.

(viii) Amador County APCD.

(A) New or amended Rules 102(C), 102(F), 102(AW), 103, 205(A)(1), 207, 212, 216, 302(A), 304, 305(C), 313(A), 507, 602.1, 604, 605, 701, 703(E) and 710.

(ix) Calaveras County APCD.

(A) New or amended Rules 102, 203 (with the exception of (D) and (G)), 206(B), 207, 208, 209, 211, 215, 216, 217, 301, 302, 303, 304, 319, 320, 321, 322, 323, 324, 402, 404, 407, 507, 602 to 604, 700, 702, 703, 710, and 715.

(B) Previously approved and now deleted (without replacement) Rule 203(J).

(C) Previously approved on November 7, 1978 and now deleted without replacement Rules 700, 702, 703, 710, 715.

(D) Previously approved on November 7, 1978 in paragraph (c)(41)(ix)(A) of this section and now deleted without replacement, Rules 216, 324, 402, 602, 603, and 604.

(x) Placer County APCD.

(A) New or amended Rules 101, 102, 103, 104, 203 (with the exception of (G)), 206, 207, 208, 210, 211, 213, 214, 301 to 311, 313 to 322, 401, 402, 404, 407, 408, 409, 507, 603 to 605, 702 to 704, 706, 708, 709, 710, 715, 801 to 804.

(B) Previously approved on November 15, 1978 and now deleted without replacement Rules 703, 704, 708 to 710, and 715 (Mountain Counties Air Basin).

(C) Previously approved on November 15, 1978 and now deleted without replacement Rules 603 to 605, 702 to 704, 706, 708 to 710, and 715 (Lake Tahoe Air Basin).

(D) Previously approved on November 15, 1978 in paragraph (c)(41)(x)(A) of this section and now deleted without replacement, Rule 402.

(E) Previously approved on November 15, 1978 in paragraph (c)(41)(x)(A) of this section and now deleted without replacement, Rules 801 to 804 (Lake Tahoe Air Basin).

(F) Previously approved on November 15, 1978 in paragraph (c)(41)(x)(A) of this section and now deleted without replacement, Rules 801, 802, 803 (paragraphs B and C), and 804 (Mountain Counties Air Basin).

(G) Previously approved on November 15, 1978 in paragraph (c)(41)(x)(A) of this section and now deleted without replacement, Rules 603, 604, 605, and 801 to 804 (Sacramento Valley Air Basin).

(xi) Tulare County APCD.

(A) New or amended Rules 108 and 412.1

(xii) Shasta County APCD.

(A) New or amended Rules 1:2 (with the exception of the definition of "person"); 2:6(1)(a), (1)(b), (i–ii), (1)(b)(iii), (a, b, and d), (1)(b), (iv–vii), (1)(c), (i–vi and viii), (1) (d and e), (2) (a–d and f), (3) (a–c and e–g), (4) (a–c and e–i), (5) (b–d); 2:7, 2:8; 3:2 (except part VI and VII of table II, and explanatory notes 6 and 7); 3:4, 4:1, 4:5, 4:6, 4:14, and 4:19.

(B) Previously approved on November 14, 1978 and now deleted without replacement Rules 4.5 and 4.6.

(xiii) Madera County APCD.

(A) Amended Rule 412.1.

(xiv) South Coast Air Quality Management District.

(A) New or amended Rules 101 and 102 (except for the definition of "agricultural burning").

(xv) Northern Sonoma County APCD.

(A) New or amended Rules 420(e) and (f), and 455(a) and (d).

(42) Revised regulations for the following APCD's submitted on November 4, 1977 by the Governor's designee.

(i) Imperial County APCD.

(A) New or amended Rules 100 to 110, 113 to 115, 301 to 303, 305, 401, 403 to 406, 408, 409, 411 to 416, 419 to 422, 501 to 516, and 701 to 706.

(B) Previously approved and now deleted (without replacement), Rules 106B, 113, 126, 131 and 147.

(C) Rules 601, 602 (except those portions that pertain to the criteria levels for carbon monoxide and sulfur dioxide), 603, 604, 605, 606, 607, 608, 609, 610, 611, 612, 613, and 614.

(D) New Rule 417 (A–H, and J).

(E) Previously approved on August 11, 1978 and now deleted without replacement Rules 501 to 512 and 514 to 516.

(F) Previously approved on August 11, 1978 in paragraph (c)(42)(i)(A) of this section and now deleted without replacement, Rules 104, 106, and 303.

(ii) Sacramento County APCD.

(A) Rules 3, 7(a) to 7(b)(2), 7b(4) to 7(d), 9, 11, 12, 13, 14, 15, 21, 22a, 23, 24, 25, 26, 94, 95, 96, 97, and 98.

(B) Rules 120, 121, 122, 125, and 126, except those portions that pertain to the 12-hour CO criteria level.

(iii) Kings County APCD.

(A) New or amended Rules 102, 103, 103.1, 104, 105, 108, 108.1, 110, 111, 112, 113, 401, 402(a) to 402(d), 402(f), 402(g), 404, 404.1, 405, 405.1, 405.2, 405.3, 406, 407.1, 409, 410, 416.1, 417, 417.1, 418, 421, and 501.

(B) Previously approved and now deleted, Rule 405.1.

(C) Previously approved on August 4, 1978 and now deleted without replacement Rules 105 and 501.

(D) Previously approved on August 4, 1978 in paragraph (c)(42)(iii)(A) of this section and now deleted without replacement, Rules 104 and 110.

(iv) Stanislaus County APCD.

(A) New or amended Rules 103.1, 108, 411.1.

(v) Merced County APCD.

(A) Amended Rules 411(b) and 411.1.

(vi) Kern County APCD.

(A) Rule 412.1.

(vii) San Luis Obispo County APCD.

(A) New or amended Rules 105(A)(1), 407, 501(A)(7), 502(A)(3).

(viii) Glenn County APCD.

(A) New or amended Rules 82, 152, and 154.

(B) Previously approved on September 14, 1978 in paragraph (c)(42)(viii)(A) of this section and now deleted without replacement, Rules 152 and 154.

(ix) Great Basin Unified APCD.

(A) New or amended Rules 300, 423, and 617.

(B) Previously approved and now deleted (without replacement) Rules 411 and 418.

(x) El Dorado County APCD.

(A) New or amended Rules 102, 201, 203 [with the exception of (G)], 206(B), 207, 208, 215, 216, 217, 217–49 to 217–50, 217–51(A to D), 217–53 to 217–56, 217–1 to 217–3, 302, 303, 304, 307, 308, 319, 320, 321, 322, 324, 402, 407, 409, 507, 700, 703 and 710.

(B) Previously approved on November 6, 1978 in paragraph (c)(42)(x)(A) of this section and now deleted Rule 102.

(C) Previously approved on November 6, 1978 in paragraph (c)(42)(x)(A) of this section and now deleted without replacement, Rules 216, 324, and 402.

(xi) Fresno County APCD.

(A) New or amended Rules 411.1 and 416.1(g).

(xii) San Joaquin County APCD.

(A) New or amended Rules 108 and 411.2.

(xiii) San Bernardino County Desert APCD.

(A) New or amended Rules 101, 102, 103, 105, 404, 405, 406(a), 444, 461, 462, 463, 471, 474, 501, 502 and 509.

(B) Previously approved and now deleted without replacement Rules 44 and 53.1.

(C) Rules 701, 702, 712, and 715.

(D) Previously approved on December 21, 1978 and now deleted without replacement Rules 501, 502, and 509.

(xiv) Riverside County APCD.

(A) New or amended Rules 101, 102, 105, 461, and 501.

(B) Rule 701.

(C) Previously approved on December 21, 1978 and now deleted without replacement Rule 501.

(D) Previously approved on December 21, 1978 in paragraph (c)(42)(xiv)(A) of this section and now deleted without replacement, Rule 105 (Mojave Desert AQMD only).

(xv) Del Norte County APCD.

(A) New or amended Rules 240(e), 420 (e) and (f), and 455 (a) and (d), and Appendix D to regulation 1.

(xvi) South Coast Air Quality Management District.

(A) New or amended Rules 218, 463, and 466.

(B) Rules 702 (map only) and 708.2.

(C) Rules 714 and 715.1 (except those portions that pertain to sulfate, oxidant in combination with sulfate, and oxidant in combination with sulfur dioxide).

(xvii) Humboldt County APCD.

(A) New or amended Rules 240(e), 420 (e) and (f), and 455 (a) and (d), and Appendix D to Regulation 1.

(xviii) Santa Barbara County APCD.

(A) New Rule 39.3.

(xix) Mendocino County APCD.

(A) New or amended Rules 240(e), 420 (e) and (f), and 455 (a) and (d), and Appendix D to Regulation 1.

(xx) Trinity County APCD.

(A) New or amended Rules 240(e), 420 (e) and (f), and 455 (a) and (d), and Appendix D to Regulation 1.

(xxi) Northern Sonoma County APCD.

(A) New or amended Rules 240(e), 310, and Appendix D to Regulation 1.

(xxii) Monterey Bay Unified APCD.

(A) Regulation VII, Rules 700–713.

(43) [Reserved]

(44) Revised regulations for the following APCD's submitted on June 22, 1978, by the Governor's designee.

(i) Great Basin Unified APCD.

(A) Amended Rule 419.

(ii) Santa Barbara County APCD.

(A) New Rule 24.15.

(iii) Ventura County APCD.

(A) New or amended Rules 2, 7, and 56 (with the exception of Sections B(2)(c) and C).

(iv) Yolo-Solano APCD.

(A) Amended Rules 1.2 (preamble), 1.4, 2.8(c)(2), 2.13(h)(4), 2.15, 2.17, 2.20, 4.4(b), 5.1, 5.4(e)(1), 5.10, 5.11, and 6.7(f).

(B) Previously approved and now deleted (without replacement) Rule 2.8(b)(4).

(C) Previously approved on January 29, 1979 and now deleted without replacement Rules 5.1, 5.10 and 5.11.

(D) Previously approved on January 29, 1979 in paragraph (c)(44)(iv)(A) of this section and now deleted without replacement, Rule 1.4.

(v) South Coast Air Quality Management District.

(A) Rules 102, 501.1, and 503.

(B) Previously approved on March 28, 1979, and now deleted without replacement Rule 503.

(vi) San Diego County APCD.

(A) New or amended Rules 66, 67.0, and 67.1.

(45) Revised regulations for the following APCD's submitted on July 13, 1978 by the Governor's designee.

(i) Bay Area APCD.

(A) New or amended Regulation 2, Division 3, sections 3210.11(B), 3211.2; Regulation 3, Division 3, §3102.1; Regulation 9.

(ii) South Coast AQMD.

(A) Rules 302, 461, 465, 1102, and 1113.

(iii) San Diego County APCD.

(A) New or amended Rules 42, 76, and 97.

(B) Previously approved on July 30, 1979 and now deleted without replacement Rules 76 and 97.

(46) The following Administrative Chapters of the California SIP, submitted on December 29, 1978, by the Governor's designee.

(i) Chapter 2—Statewide Perspective.

(ii) Chapter 20—Compliance.

(iii) Chapter 23—Source Surveillance.

(iv) Chapter 24—Resources.

(v) Chapter 25—Intergovernmental Relations.

(47) Revised regulations for the following APCD's submitted on January 2, 1979 by the Governor's designee.

(i) South Coast AQMD.

(A) New or amended Rules 301, 303, 708.3, 1201–1206, 1209–1211, 1214, 1217, 1220–1221, 1223–1224 and 1231.

(B) New or amended Rules 462, 481, and 1104.

(C) Previously approved on May 9, 1980 and now deleted without replacement for implementation in the Antelope Valley Air Pollution Control District Rules 1201–1205, 1209–1211, 1214, 1217, 1220–1221, and 1223–1224.

(D) Previously approved on May 9, 1980 and now deleted without replacement for implementation in the South Coast Air Quality Management District, Rule 1231. (JR)

(ii) Fresno County APCD.

(A) New or amended Rules 110, 416.1, and 519.

(B) New or amended Rule 409.1.

(iii) Kern County APCD.

(A) New or amended Rules 111, 301, and 519.

(B) Rule 412.

(iv) Lake County APCD.

(A) New or amended Rules 435, and 436, and Tables V and VI.

(v) Monterey Bay Unified APCD.

(A) Amended Rule 301.

(vi) Siskiyou County APCD.

(A) Amended Rule 4.3.

(vii) San Luis Obispo County APCD.

(A) Rule 407.

(B) New or amended Rule 201.

(48) Chapter 3—Legal Authority of the California SIP, submitted on March 16, 1979, by the Governor's designee.

(49) Addendum to Chapter 23 of the California SIP submitted on March 29, 1979, by the Governor's designee.

(50) Revised regulations for the following APCD's submitted on May 7, 1979, by the Governor's designee.

(i) Del Norte County APCD.

(A) New or amended Rules 240, 410 (a) and (c), and 615.

(B) Previously approved on October 31, 1980 and now deleted without replacement Rule 615.

(ii) Humboldt County APCD.

(A) New or amended Rules 240, 410 (a) and (c), 615.

(B) Previously approved on October 31, 1980 and now deleted without replacement Rule 615.

(iii) Mendocino County APCD.

(A) New or amended Rules 240, 410, and 615.

(B) Previously approved on October 31, 1980 and now deleted without replacement Rule 615.

(iv) Trinity County APCD.

(A) New or amended Rules 240, 410 (a) and (c), and 615.

(B) Previously approved on October 31, 1980 and now deleted without replacement Rule 615.

(v) Northern Sonoma County APCD.

(A) New or amended Rules 240, 300, 310, 320, 410 (a) and (c), 420, 540, 615.

(B) Previously approved on October 31, 1980 and now deleted without replacement Rules 320 and 615.

(vi) Merced County APCD.

(A) New or amended Rule 409.1.

(B) New or amended Rule 519.

(vii) Modoc County APCD.

(A) New or amended Rules 1:2 w, 2:11, 2:15, 3:3 and 3:4.

(viii) Monterey Bay Unified APCD.

(A) Rules 403 and 602.

(ix) Ventura County APCD.

(A) New or amended Rules 71 and 71.3.

(B) New or amended Rule 11.

(x) San Diego County APCD.

(A) New or amended Rule 10(h) and deletion of Rule 43.

(51) Revised regulations for the following APCD's submitted May 23, 1979, by the Governor's designee.

(i) Kern County APCD.

(A) Amended Rules 305 and 503.

(B) Rules 410.1 and 424.

(C) Previously approved on August 11, 1980 and now deleted without replacement Rule 503 (including Southeast Desert).

(ii) Monterey Bay Unified APCD.

(A) Rule 417.

(B) Rule 617.

(iii) Del Norte County APCD.

(A) New or amended Rules 130, 300, 310, 320, 420, 540 and Regulation 1/Appendix D.

(B) Previously approved on October 31, 1980 and now deleted without replacement Rule 320.

(iv) Humboldt County APCD.

(A) New or amended Rules 130, 300, 310, 320, 420, 540 and Regulation 1/Appendix D.

(B) Previously approved on October 31, 1980 and now deleted without replacement Rule 320.

(v) Mendocino County APCD.

(A) New or amended Rules 130, 300, 310, 320, 420, 540 and Regulation 1/Appendix D.

(B) Previously approved on October 31, 1980 and now deleted without replacement Rule 320.

(vi) Trinity County APCD.

(A) New or amended Rules 130, 300, 310, 320, 420, 540 and Regulation 1/Appendix D.

(B) Previously approved on October 31, 1980 and now deleted without replacement Rule 320.

(vii) San Diego County APCD.

(A) Amended Rules 2(t), 61.5, and 61.7.

(B) New or amended Rules 19.2(d)(4), 50, 62(a), 66(P) and (W), 95, and 98.

(C) New or amended Rule 11.

(D) Previously approved on September 28, 1981 and now deleted without replacement Rules 95 and 98.

(viii) San Joaquin County APCD.

(A) New or amended Rule 409.1.

(B) New or amended Rules 110 (a), (b), and (d)–(i), 301, 303–311, and 511.

(C) New or amended Rules 102, 108.2, 110(c), 302, 401, and 521.

(D) Previously approved on December 9, 1981 and now deleted without replacement Rules 301, 303 to 311, and 511.

(E) Previously approved on June 18, 1982 and now deleted without replacement Rule 302.

(ix) Stanislaus County APCD.

(A) New or amended Rule 409.1.

(B) New or amended Rule 110 (A), (B) and (D)–(I).

(C) New or amended Rules 110(c) and 519.

(D) Previously approved on June 18, 1982 and now deleted without replacement Rule 519.

(x) Tulare County APCD.

(A) New or amended Rules 410.1 and 413.

(B) New or amended Rules 111 (a), (b), and (d)–(i), 402, and 417.

(C) New or amended Rules 108, 111(c), 201, 410 and 519.

(xi) Lake County APCD.

(A) New Rules 227.1, 254.1, and 660.

(B) Previously approved on January 27, 1981 in paragraph (c)(51)(xi)(A) of this section and now deleted without replacement, Rule 660.

(xii) San Bernardino County Desert APCD.

(A) New Rules 480 and 501.1.

(B) New or amended Rules 442, 463, and 1113.

(C) Previously approved on January 27, 1981 and now deleted without replacement Rule 501.1.

(xiii) Santa Barbara County APCD.

(A) New or amended Rules 101, 102, 103, 104, 201(A, B, D, E, F, and G), 202, 203, 204, 205(A and B), 206, 207, 208, 209, 210, 211, 301, 302, 304, 305, 306, 307, 308, 309, 311, 312, 313, 314, 315, 317, 319, 322, 324, 328, 401, 402, 403, 501, 502, 503, 504, 505, 505–A, 506, 507, 508, 509, 510, 511, 512, 513, 514, 515, 516, 517, 518, 519, 601, 602, 603, 604, 605, 606, 607, 608, 609, and 610.

(B) Previously approved on May 18, 1981 and now deleted without replacement Rules 210 to 211, 501 to 504, 506 to 512, 514 to 516, and 518.

(C) Previously approved on May 18, 1981 in paragraph (c)(51)(xiii)(A) of this section and now deleted without replacement, Rule 402.

(xiv) El Dorado County APCD—Lake Tahoe Air Basin Portion.

(A) New or amended Rules 101, 102 (except LAER, stationary source, modification definitions), 103, 104, 201–203, 206A–212, 217, 301–305, 307–310, 312–321, 404, 702–704, 706–710, and 801–804. Deleted Rules 59(g)(1), 102I, 102S, 102BB, 102FF, 102GG, 102LL, 102RR, 208, 214, 601, 602, and 700.

(B) Amended Rule 306.

(C) New or amended Rules 102, LAER, stationary source, and modifications; 213; and 214.

(D) Previously approved on May 18, 1981 in paragraph (c)(51)(xiv)(A) of this section and now deleted without replacement, Rules 801 to 804.

(xv) Placer County APCD—Mountain Counties Air Basin Portion.

(A) New or amended Rules 404, 602, and 603.

(B) Deletion of Rules 604 and 605.

(C) Previously approved on May 18, 1981 and now deleted without replacement Rules 404, 602, and 603.

(xvi) Sacramento County APCD.

(A) Amended Rule 71.

(B) Previously approved on January 26, 1982 and now deleted without replacement Rule 71.

(xvii) Shasta County APCD.

(A) Amended Rule 3.4.

(xviii) Sierra County APCD. (A) New or amended Rules 207, 210, 211, 218 and 618.

(B) Previously approved on January 25, 1982 in paragraph (c)(51)(xviii)(A) of this section and now deleted without replacement, Rule 618.

(xix) Tehama County APCD.

(A) Amended Rule 2.1 and previously approved and now deleted Rule 2.9 (Action on Applications).

(xx) Ventura County APCD.

(A) New or amended Rules 6, 8, 9, 13, 24, 40, 63, 75, 102, 103, 110, 111, 112, 113, 114, 120, 121, 123, 124, 125, 126, 127, and 130.

(B) Previously approved on June 18, 1982 and now deleted without replacement Rules 40, 110 to 114, 120 to 121, 123 to 126, and 130.

(C) Previously approved on June 18, 1982 in paragraph (c)(51)(xx)(A) of this section and now deleted without replacement, Rule 9.

(52) Revised regulations for the following APCD's submitted October 15, 1979, by the Governor's designee.

(i) Kern County APCD.

(A) Amended Rule 302

(B) Rules 410.4, 410.5, and 414.2.

(C) Previously approved on August 21, 1981 and now deleted without replacement for implementation in the Southeast Desert Air Basin, Rule 414.2.

(ii) Imperial County APCD.

(A) Rules 415.1 and 424.

(B) New or amended Rules 101 L, 110, 201B, 301, 302, 304, 306, 401, 404, 406, 408, 410, 417 I, 418, 419, 422, Regulation VI, 701, 702, 703 (deletion), 705, and 706.

(C) Previously approved on January 27, 1981 in paragraph (c)(52)(ii)(B) of this section and now deleted without replacement, Rules 304 and 706.

(iii) [Reserved]

(iv) Kings County APCD.

(A) New or amended Rules 210.1 (except paragraphs (3)(D) and (5)(B)(8)), 210.2, 410.1, 410.2, 410.3, 410.5, 412.1, 413, 414.1, and 414.2.

(B) New or amended Rules 111 (A), (B), and (D)–(I), 301, 302, and 401.

(C) New or amended Rules 111(c), and 519.

(D) Previously approved on October 9, 1981 and now deleted without replacement Rule 302.

(E) Previously approved on June 18, 1982 and now deleted without replacement Rule 519.

(F) Previously approved on December 9, 1981 in paragraph (c)(52)(iv)(B) of this section and now deleted without replacement, Rule 301.

(v) Madera County APCD.

(A) New or amended Rules 210.2, 410.1, 410.3, 410.5, 411, and 412.

(B) New or amended Rules 102, 103, 103.1, 104, 105, 108, 108.1, 110, 115, 210.3, 301, 305, 402(a)–(e), 409, 410, 416, 417, 418, 501, 504, 511, 601, 602, 603, 606–611, and 612.

(C) New or amended Rules 111(c) 402(f) and 519.

(vi) Merced County APCD.

(A) New or amended Rules 210.1 (except paragraphs (3)(D) and (5)(B)(8)), 210.2, 409.5, and 411.

(B) New or amended Rules 109 (A), (B), and (D)–(I).

(C) New or amended Rule 109(c).

(vii) San Joaquin County APCD.

(A) New or amended Rules 209.1 (except paragraphs (B)(3) and (D)(2)(b)), 209.2, 409.3, 410, 411.1, 413, 413.1, 413.2, and 413.3.

(B) New or amended Rule 209.3.

(C) New or amended Rule 209.4.

(viii) Stanislaus County APCD.

(A) New or amended Rules 209.2 and 411.

(ix) Tulare County APCD.

(A) New or amended Rules 210.1 (except paragraphs (C)(4) and (e)(2)(H)), 210.2 and 410.5.

(B) New or amended Rules 301 and 302.

(C) Previously approved on December 9, 1981 and now deleted without replacement Rules 301 and 302.

(x) Lake County APCD.

(A) Amended Rule 433.

(xi) Amador County APCD.

(A) New or amended Rules 102, 103, 107, 203, 206B, 207, 209–211, 213, 215, 216, 301–313, 315–324, 401, 402, 404, 407, 409, Regulation VI, 700–704, 710, and 711.

(B) Previously approved on May 18, 1981 and now deleted without replacement Rules 605, 700 to 704, and 710 to 711.

(C) Previously approved on May 18, 1981 in paragraph (c)(52)(xi)(A) of this section and now deleted without replacement, Rules 103, 402, and 601 to 604.

(xii) Nevada County APCD.

(A) New or amended Rules 207, 210, 211, 218, 306, 307, and 404.

(B) Previously approved on May 18, 1981 and now deleted without replacement Rule 404.

(xiii) Placer County APCD—Mountain Counties Air Basin Portion.

(A) New or amended Rules 101, 102, 104, 201, 202, 207, 210, 211, 220–222, 301–310, and 312–323.

(B) New or amended Rules 215 and 219.

(C) Rule 508 (except paragraph (c)(3)(h)).

(D) New or amended Rules 501B, 502, 504, 506, 512, and 513.

(E) Previously approved and now deleted, Rule 104.

(xiv) Tuolumne County APCD.

(A) New or amended Rules 207, 210, 218, and 404.

(xv) Fresno County APCD.

(A) New or amended Rules 210.1 [except paragraphs (3)(D) and (5)(B)(8)], 210.2, 409.5, 409, 409.3, 409.4, and 411.

(B) New or amended Rules 301, 302, and 305.

(C) Previously approved on December 9, 1981 and now deleted without replacement Rule 305.

(D) Previously approved on December 9, 1981 in paragraph (c)(52)(xv)(B) of this section and now deleted without replacement, Rule 302.

(xvi) Yuba County APCD.

(A) New or amended Rules 1, Section 1 (except Silviculture Deletion), 1.1 (except PPM), 2.0–2.2, 2.4 except (a), 2.5–2.12, 2.15–2.20, 2.22–2.24, 2.27, 2.30, Section 5 (Deletion), 5.0–5.3, 5.5–5.19, 6.1–6.7, 7, 7.1 and 8.1.

(B) New or amended Rules 2.3 and 2.4(a).

(C) Previously approved on January 26, 1982 in paragraph (c)(52)(xvi)(A) of this section and now deleted without replacement, Rules 7.0, 7.1, and 8.1.

(xvii) San Diego County APCD.

(A) New or amended Rule 67.7 and 67.2.

(xviii) Shasta County APCD.

(A) New or amended Rules 1.1, 1.2, 2.11, 2.12, and 3.2 (except rows (vi) and (vii)).

(B) Amended Rule 2:5.

(xix) Yolo—Solano APCD.

(A) New or amended Rules 4.1–4.3.

(B) New or amended Rules 301, 302, and 305.

(C) Previously approved on January 26, 1982 and now deleted without replacement Rule 4.3.

(xx) Sacramento County APCD.

(A) New or amended Rule 1.

(xxi) Siskiyou County APCD.

(A) New or amended Rules 2.14–2.16.

(53) Revisions to air pollution emergency episode plans submitted on February 14, 1980 by the Governor's designee.

(i) Bay Area Air Quality Management District Rules 100, 101, 300, 301, 302, 303, 304, 305, 400, 401, 402, 403, and 404.

(54) Revised regulations for the following APCD's submitted on February 25, 1980, by the Governor's designee.

(i) Ventura County APCD.

(A) Rules 150, 152, 153, 154, 155, 156, 157, 158, 159, 160, 161, and 162.

(B) New or amended Rule 71.1.

(C) New or amended Rules 56, 80, 81, and deletion of Rules 17, 151, 163, and 164.

(ii) Monterey Bay Unified APCD.

(A) Rule 422 and deletion of Rule 508.

(B) Amended Rule 416.

(iii) San Luis Obispo County APCD.

(A) Rules 301, 302, 303, and 304.

(B) Previously approved on May 18, 1981 and now deleted without replacement Rules 303 and 304.

(iv) Yolo—Solano APCD.

(A) Amended Rule 5.4.

(B) New or amended Rules 2.21, 2.21.1, 2.24 and 2.25.

(C) New or amended Rule 3.13.

(D) Previously approved on January 26, 1982 and now deleted without replacement Rule 5.4.

(v) Sacramento County APCD.

(A) New or amended Rule 17.

(B) [Reserved]

(C) New or amended Rules 3.13, 3.4.1, and 3.4.2.

(vi) Sutter County APCD.

(A) New or amended Rules 1.4, 2.8.1 (Deletion), 2.17, and 2.82.

(B) Previously approved on January 26, 1982 in paragraph (c)(54)(vi)(A) of this section and now deleted without replacement, Rule 1.4.

(vii) Yuba County APCD.

(A) Amended Rule 2.26.

(viii) Butte County APCD.

(A) New Rule 2–12.e.

(B) Amended Rules 4.5A and 4.5B.

(C) Previously approved on May 27, 1982 in paragraph (viii)(B) of this section and now deleted Rules 4.5A and 4.5B.

(ix) Tehama County APCD.

(A) Amended Rules 2.5A and 2.5B.

(x) Colusa County APCD.

(A) New or amended Rules 2.7 A and B.

(xi) Glenn County APCD.

(A) New or amended Rules 51.1 and 51.2.

(xii) Shasta County APCD.

(A) New or amended Rules 1:2 (Best Available Control Technology, Stationary Source and Precursor) and 2:1 A.

(55) The following material for Imperial County was submitted on October 11, 1979 by the Governor's designee.

(i) Summary of Plan Compliance with Clean Air Act Requirements.

(ii) Imperial County plan to attain National Ambient Air Quality Standards for oxidants, October 31, 1978.

(iii) SIP Revision—Imperial County ARB Staff Report, No. 79–4–2.

(iv) ARB resolution 79–9, February 21, 1979.

(v) Copies of Board hearing testimony.

(56) Revised regulations for the following APCDs submitted on March 17, 1980, by the Governor's designee.

(i) Imperial County APCD.

(A) Rules 207 [except Subparagraph C.4.], 208, and 209.

(ii) Ventura County APCD.

(A) Amended Rule 26.3.

(B) New or amended Rules 10, 25, and 27.

(C) Previously approved on June 18, 1982 and now deleted without replacement Rule 25.

(57) The *North Central Coast Air Basin Strategy* (Chapter 10 of the comprehensive revisions to the State of California Implementation Plan for the Attainment and Maintenance of Ambient Air Quality Standards) submitted on September 12, 1979 by the Governor's designee.

(58) Revised regulations for the following APCDs submitted on December 17, 1979 by the Governor's designee.

(i) Monterey Bay Unified APCD.

(A) Rules 418, 425 and 426.

(B) New or amended Rules 300, 405, and 601.

(ii) South Coast AQMD.

(A) New or amended Rules 1107, 1108, 1108.1 and 1128.

(B) New or amended Rules 404, 442, 501.1, 502, 504.1(b), (c), and (d), and 1124.

(C) Previously approved on September 28, 1981 and now deleted without replacement Rule 501.1.

(iii) Great Basin Unified APCD.

(A) New or amended Rules 205, 210, 300A, and G, 403, 408, 419, and 617.

(B) New or amended Rules 203, 209–A and B, 212, and 213.

(iv) Ventura County APCD.

(A) New or amended Rule 74.3.

(v) Butte County APCD.

(A) New or amended Rules 2.12a, 2.12b, 2.12c, and 2.12d.

(vi) Shasta County APCD.

(A) New or amended Rules 1.2, 3.14, and 3.15.

(vii) Yolo—Solano APCD.

(A) Amended Rules 2.8 and 6.6.

(viii) San Luis Obispo County APCD.

(A) New or amended Rule 407.

(ix) Modoc County APCD.

(A) New or amended Rule 2:8–e.

(59) Revised regulations for the following APCD submitted on March 4, 1980 by the Governor's designee.

(i) Monterey Bay Unified APCD.

(A) Rules 207 (except B.4.) and 208.

(B) New or amended Rules 205, 211, 212, 213, and 214.

(60) Chapter 4, *California Air Quality Control Strategies*, of the California SIP, submitted on May 23, 1979, by the Governor's designee.

(61) Redesignation of AQCR's in California, submitted on September 11, 1978, by the Governor's designee.

(62) The *San Diego Air Basin Control Strategy* (Chapter 14 of the Comprehensive Revisions to the State of California Implementation Plan for the Attainment and Maintenance of Ambient Air Quality Standards) submitted on July 5, 1979, by the Governor's designee, except the inspection/maintenance portion. Additional documents were also submitted as appendices. Those portions of the *San Diego Air Basin Control Strategy*, including Appendices, identified by Table 14–1, "Location of Plan Elements Which Meet Clean Air Act Requirements" (pages 6–7), comprise the submitted nonattainment area plan, except the inspection/maintenance portion. The remaining portions are for informational purposes only.

(63) The following portions of the *California Environmental Quality Act* submitted on October 20, 1980, by the Governor's designee: Sections 21000; 21001; 21002; 21002.1; 21061; 21063; 21065; 21080.1; 21080.4; 21080.5 (a), (b), (c) and (d); 21081; 21082; 21100; 21104; 21151; 21153; 21160.

(64) Revised regulations for the following APCD submitted on February 13, 1980, by the Governor's designee.

(i) San Diego County APCD.

(A) Rules 20.1, 20.2, 20.3, 20.4, 20.5 and 20.6.

(65) The following amendments to the South Coast Air Basin Control Plan were submitted on July 25, 1979, by the Governor's designee.

(i) The *South Coast Air Basin Control Strategy* (Chapter 18 of the Comprehensive Revision to the State of California Implementation Plan for the Attainment and Maintenance of Ambient Air Quality Standards). Those portions of the *South Coast Air Basin Control Strategy* identified by Table 18–1, "Location of Plan Elements Which Meet Clean Air Act Requirements," together with Rules 1115 and 1126, comprise the submitted nonattainment area plan control strategy. The remaining portions are for informational purposes only.

(ii) New or amended Rules 218, 431, 431.1–431.3, 1120, 1206–1208, 1212, 1213, 1215, 1216, 1218, 1219, 1222, and 1225–1230.

(iii) Previously approved on September 28, 1981 and now deleted without replacement for implementation in the Antelope Valley Air Pollution Control District Rules 1206, 1208, 1212, 1213, 1215, 1216, 1218, 1219, 1222, and 1225–1230.

(66) Revised regulations for the following APCD's, submitted on February 7, 1980, by the Governor's designee.

(i) South Coast AQMD.

(A) New or amended Rule 461.

(B) Amended Rule 466.

(ii) Bay Area AQMD.

(A) Regulation 8: Rule 1, 2 (except paragraph 301), 4, 7, 8, 9, 10, 11, 13, 14, 15, 16, 18 and 19.

(67) Revised regulations for the following APCD's, submitted on April 2, 1980, by the Governor's designee.

(i) South Coast AQMD.

(A) New or amended Rule 1122.

(B) New or amended Rules 107, 709(c), 1111, 1121 and 1140.

(ii) Bay Area AQMD.

(A) New or amended Regulation 9, Rules 9–4–100, 9–4–101, 9–4–200 to 9–4–203, 9–4–300, 9–4–301, 9–4–303, and 9–4–400 to 9–4–404.

(iii) Kern County APCD.

(A) New or amended Rules 412.1(b)–(f).

(B) New Rule 411.1.

(C) Previously approved on July 8, 1982 and now deleted without replacement for implementation in the Southeast Desert Air Basin, Rule 411.1.

(iv) Sacramento County APCD.

(A) New or amended Rules 7, 24, 25, 28, 30, and 53.

(B) New or amended Rules 120, 121, and 122.

(68) Revised regulations for the South Coast AQMD, submitted on April 3, 1980, by the Governor's designee.

(i) New or amended Rules 1301, 1303, 1304, 1305, 1306, 1307, 1310, 1311, and 1313.

(ii) Previously approved on January 21, 1981 and now deleted without replacement Rule 1311.

(69) Revised regulations for the South Coast AQMD submitted on April 23, 1980, by the Governor's designee.

(i) New or amended Rules 464, 465, 1123, and 1125.

(ii) New or amended Rules 301, 405, 431.2(c)(5), 701, 702 (a), (d), (e), (f), (h) and (i), 703–706, 708.3(a), (b)(8)–(b)(10), 708.4(g) and (h), 709(a), 710(a) and (b)(4), 711(a)(1), (a)(4), (b)(1) and (b)(4), and 713–715.

(iii) New Rule 1103.

(iv) California Health and Safety Code, Sections 41950 to 41962, 94000 to 94004; and Stationary Source Test Methods—Volume 2: Certification and Test Procedures for Gasoline Vapor Recovery Systems submitted on April 23, 1980.

(v) Previously approved on July 8, 1982 in paragraph (c)(69)(iii) of this section and now deleted without replacement for implementation in the Antelope Valley Air Pollution Control District Rule 1103.

(70) Revised regulations for the following APCD's submitted on August 15, 1980, by the Governor's designee.

(i) South Coast AQMD.

(A) New or amended Rules 1302 and 1308.

(B) New or amended Rule 1101.

(C) New or amended Rules 702(b), 707, 708, 708.3 (a)(2) and (c), 708.4 (a) and (b), 709(e), 710 (b)(1)(D), (b)(2)(D), (b)(3)(B), and (c)(3)(B), 711 (a)(1)(E), (a)(2)(D), (a)(3)(B), (a)(4)(F), (b)(3)(B), and (b)(4)(f), and 1102.

(D) Amended Rule 401 (except subparagraph 401(b)).

(ii) San Diego County APCD.

(A) New or amended Rules 2 (z) and (aa), 40, and 10 (f) and (i).

(iii) Shasta County APCD.

(A) Amended Rule 3.3.

(iv) El Dorado County APCD (Mountain Counties and Lake Tahoe Air Basin).

(A) New or amended Rules 601–613.

(B) Previously approved on May 27, 1982 in paragraph (c)(70)(iv)(A) of this section and now deleted without replacement, Rules 601 to 613.

(71) The *San Joaquin Valley Air Basin Control Strategy (Chapter 16 of the Comprehensive Revisions to the State of California Implementation Plan for the Attainment and Maintenance of Ambient Air Quality Standards)* submitted on October 11, 1979, by the Governor's designee. Those portions of the *San Joaquin Valley Air Basin Control Strategy* identified by Tables 16–1a, 1b and 1c (Summary of Plan Compliance with Clean Air Act Requirements) except for those portions which pertain to Fresno County and the six transportation control measures for Stanislaus County, comprise the submitted plan. The remaining portions are for informational purposes only. The following rules were also submitted on October 11, 1979 as part of the enforceable plan:

(i) Kings County APCD.

(A) New or amended Rules 411 and 413.3.

(ii) Madera County APCD.

(A) New or amended Rule 210.1 (except paragraphs (3)(D) and (5)(B)(8)).

(iii) Merced County APCD.

(A) New or amended Rules 409.3 and 410.

(iv) Tulare County APCD.

(A) New or amended Rule 410.3.

(72) The San Francisco Bay Area Basin Control Strategy (Chapter 15 of the Comprehensive Revisions to the State of California Implementation Plan for the Attainment and Maintenance of Ambient Air Quality Standards) including appendices, submitted on July 25, 1979, by the Governor's designee.

(73) Revised regulations for the following APCD's submitted on January 14, 1980, by the Governor's designee.

(i) Bay Area AQMD.

(A) Regulation 2: Rule 1: 2–1–200, 2–1–300, 2–1–307, and 2–1–400, Rule 2: 2–2–100, 2–2–200, 2–2–209, 2–2–210, 2–2–300, and 2–2–400; Rule 3: 2–3–100, 2–3–101, 2–3–200, 2–3–201, 2–3–300, 2–3–301, 2–3–302, 2–3–401, 2–3–401.1 to 2–3–401.3, 2–3–402, 2–3–403, 2–3–404, and 2–3–405.

(B) New or amended Regulation 2, Rule 1: 2–1–100 to 2–1–102, 2–1–111, 2–1–112, and 2–1–408.

(74) Revised regulations for the following APCD's submitted on December 24, 1979, by the Governor's designee.

(i) Imperial County APCD.

(A) New or amended Rules 111, 413, 414, 416, 416 (deletion), and 517.

(B) Previously approved on January 27, 1981 and now deleted without replacement Rule 517.

(ii) Santa Barbara County.

(A) Rule 316.

(iii) Ventura County APCD.

(A) New Rule 70 (except paragraph E).

(75) Revised regulations for the Kern County APCD, submitted on January 8, 1980, by the Governor's designee.

(i) Rules 210.2, 410.3, 411, 414, 414.1, and 414.3.

(ii) New or amended Rule 424(F).

(iii) Previously approved on August 21, 1981 and now deleted without replacement for implementation in the Southeast Desert Air Basin, Rule 414.3.

(76) Revised regulations for the following APCD's, submitted on April 15, 1980, by the Governor's designee.

(i) Kern County APCD.

(A) Amended Rule 210.1

(77) The following amendments to the plan were submitted on October 18, 1979, by the Governor.

(i) San Luis Obispo County APCD.

(A) New or amended Rules 415, 416, 420, and 422.

(ii) The South Central Coast Air Basin Control Strategy [Chapter 17 of the Comprehensive Revision to the State of California Implementation Plan for the Attainment and Maintenance of Ambient Air Quality Standards]. Those portions of the South Central Coast Air Basin Control Strategy identified by Tables 17–1 and 17–2 "Location of Plan Elements Which Meet Clean Air Act Requirements" together with the rules identified below comprise the submitted nonattainment area plan. The remaining portions are for informational purposes only.

(A) Santa Barbara County APCD Rules 320, 321, 323, 327, 329 to 332, 201.C and 205.C. (except subparagraph 5.b.8.).

(B) Ventura County APCD Rules 26 (except 26.2, 26.3 and 26.4), 74.4, 74.7, and 74.8.

(78) Revised regulations for the following APCD submitted on November 19, 1979, by the Governor's designee.

(i) South Coast AQMD.

(A) Deletion of Rules 67 and 72.

(ii) California Lead SIP.

(79) Revised regulations for the following APCD's submitted on June 2, 1980, by the Governor's designee.

(i) Monterey Bay Unified APCD.

(A) Rule 427.

(ii) Bay Area AQMD.

(A) New or amended Regulation 1, Rules 1–100 to 1–111, 1–114, 1–200 to 1–205, 1–207 to 217, 1–219 to 1–232, 1–400 to 1–402, 1–410 to 1–412, 1–420, 1–430 to 1–434, 1–440, 1–441, 1–500 to 1–502, 1–510, 1–521, 1–530, 1–540, 1–541, 1–543, 1–544; Regulation 5, Rules 5–100, 5–101, 5–110, 5–111, 5–200 to 5–207, 5–300, 5–301, 5–400 to 5–404; Regulation 6, Rules 6–100, 6–101, 6–200 to 6–204, 6–300 to 6–304, 6–310, 6–312,6–320, 6–330, 6–400, 6–401, 6–500 to 6–502; Regulation 11, Rules 11–1–100 to 11–1–102, 11–1–300 to 11–1–303; Regulation 12, Rules 12–2–100, 12–2–101, 12–2–200, 12–2–201, 12–2–300, 12–2–301, 12–2–500, 12–2–501, 12–3–100, 12–3–101, 12–3–300, 12–3–301, 12–3–500, 12–3–501–12–4–100 to 12–4–102, 12–4–200 to 12–4–212, and 12–4–300 to 12–4–307.

(B) New or amended Regulation 1: 1–206, 1–520, 1–542, and 1–600 to 1–604; Regulation 6: 6–305, 6–311, 6–600, and 6–601; and Regulation 11: 11–1–500, 11–1–501, and 11–1–600 to 11–1–603.

(iii) Ventura County APCD.

(A) New or amended Rule 2.

(B) New or amended Rule 59.

(iv) South Coast AQMD.

(A) Deletion of Rule 471.

(B) New Rule 466.1.

(v) San Diego County APCD.

(A) New or amended Rules 1, 2 (a), (b), (t), (v), (u), (x), and (y), 14, 17, 67.0, and 67.1.

(vi) Shasta County APCD.

(A) New Rule 3.17.

(80) The following amendments to the plan were submitted on August 21, 1979 by the Governor's designee.

(i) Revised regulations for Placer County APCD—Lake Tahoe Air Basin Portion.

(A) New or amended Rules 101–104, 201–204, 206–211, 215, 217, 301–308, and 310–319.

(B) New Rule 507.

(C) New or amended Rules 502–506 and 511–513.

(D) Previously approved and now deleted, Rule 104.

(E) New or amended Rules 212, 213, 508 (except Paragraph (1)(C)(3)(h), and 514.

(ii) Chapter 8, Lake Tahoe Basin Control Strategy, including Support Documents and Appendices. The Transportation Improvement Program and Regional Transportation Plan are for informational purposes only.

(81) Revised regulations for the following APCD, submitted on February 11, 1980 by the Governor's designee.

(i) El Dorado County APCD—Lake Tahoe Air Basin Portion.

(A) New or amended Rules 507, 511–515, and 519–528.

(B) New or amended Rules 501 to 506, 508 to 510, and 516 to 518.

(82) [Reserved]

(i) Ventura County APCD.

(A) New or amended Rule 74.6.

(83)(i)(A) [Reserved]

(B) New Rules 22, 23, and 27.

(C) New or amended Regulation 8: Rule 21.

(ii) Kings County APCD.

(A) New or amended Rule 414.

(iii) [Reserved]

(A) Rule 410.

(B) New or amended Rules 411.1 and 416.1.

(84) Revised regulations for the following APCDs submitted on October 10, 1980, by the Governor's designee.

(i) Madera County APCD.

(A) New or amended Rule 410.4.

(ii) Merced County APCD.

(A) New or amended Rule 409.4.

(iii) Kings County APCD.

(A) New or amended Rule 410.4.

(iv) San Joaquin County APCD.

(A) New or amended Rule 409.4.

(v) Stanislaus County APCD.

(A) New or amended Rule 409.4.

(vi) Tulare County APCD.

(A) New or amended Rule 410.4.

(vii) Modoc County APCD.

(A) Amended Rule 3:12.

(85) Revised regulations for the following APCDs submitted on December 15, 1980, by the Governor's designee.

(i) Tulare County APCD.

(A) New or amended Rule 412.

(B) New or amended Rule 412.1.

(C) New or amended Rules 201 and 417.1.

(ii) Madera County APCD.

(A) New or amended Rule 412.1

(B) New or amended Rules 201, 202, 301, and 417.1.

(iii) Sacramento County APCD.

(A) New or amended Rule 13.

(iv) San Diego County APCD.

(A) New or amended Rules 61.0, 61.0 (n) and (o), 61.1, 61.1(a)(1) (i) and (h), 61.2, 61.2(a), 61.3 and 61.4

(v) San Bernardino County APCD, Southeast Desert Air Basin portion.

(A) New or amended Rules 461 and 462.

(vi) Tehama County APCD.

(A) New or amended Rules 1.2, 1.3, 2.7, 2.8, 2.9, 3.1, 3.2, 3.3–3.14, 4.1, 4.2, 4.6, and 4.7.

(B) Previously approved and now deleted Rule 2.8 (Further Information).

(C) Previously approved on April 12, 1982 in paragraph (c)(85)(vi)(A) of this section and now deleted without replacement, Rules 1.3 and 2.9.

(vii) Santa Barbara County APCD.

(A) New or amended Rule 210.

(B) Previously approved on June 18, 1982 in paragraph (c)(85)(vii)(A) of this section and now deleted without replacement, Rule 210.

(viii) South Coast AQMD.

(A) New Rule 1130.

(ix) Kings County APCD.

(A) New or amended Rule 417.1.

(x) Kern County APCD.

(A) New or Amended Rules 110 and 417.1.

(B) Previously approved on July 6, 1982 in paragraph (c)(85)(x)(A) of this section and now deleted without replacement, Rule 110.

(86) Revised regulations for the following APCD's submitted on July 10, 1980 by the Governor's designee.

(i) Bay Area AQMD.

(A) Regulation 8: Rule 2 (Paragraph 301).

(B) New Rules 17 (paragraphs 112, 302, 400, and 401) and 26.

(C) New or amended Regulations, Rules 1–206, 1–218, 6–311, 9–1–100, 9–1–101, 9–1–110 9–1–200 to 9–1–204, 9–1–300 to 9–1–308, 9–1–310, 9–1–311, 9–1–400 to 9–1–404, 9–1–500 to 9–1–502, and 9–4–302.

(D) New or amended Rule 1–541 and Regulation 9, Rules 9–1–600 to 9–1–605.

(ii) Butte County APCD.

(A) Amended Rule 4.9.

(B) Previously approved on May 27, 1982 in paragraph (ii)(A) of this section and now deleted Rule 4.9.

(87) Revised regulations for the following APCD's submitted on September 5, 1980 by the Governor's designee.

(i) Bay Area AQMD.

(A) Regulation 8: Rule 5, Rule 6, and Rule 12.

(B) New Rules 25 and 28 (except section 401).

(ii) San Diego County APCD.

(A) New or amended Rule 19.

(iii) San Joaquin County APCD.

(A) New or amended Rule 411.2.

(B) New or amended Rules 202 and 416.1.

(iv) San Bernardino County APCD, Southeast Desert Air Basin portion.

(A) New or amended Rules 1301, 1302, 1303, 1304, 1305, 1306, 1307, 1308, 1310, 1311, and 1313.

(v) Los Angeles County APCD, Southeast Desert Air Basin portion.

(A) New or amended Rules 1301, 1302, 1303, 1304, 1305, 1306, 1307, 1308, 1310, 1311, and 1313.

(vi) Sacramento County APCD.

(A) New or amended Rules 74, 90, 92, 93, 94, 95, 96, 98, and Regulation VII.

(B) Previously approved on June 18, 1982 and now deleted without replacement Rule 74.

(vii) Ventura County APCD.

(A) New or amended Rules 2 and 55.

(viii) Shasta County APCD.

(A) New Rule 2:6.

(88) Revised regulations for the following APCDs submitted on July 25, 1980, by the Governor's designee.

(i) Stanislaus County APCD.

(A) New or amended Rule 209.1 (except paragraphs (3)(E) and (5)(B)(8)).

(B) New or amended Rules 103 and 305.

(C) New or amended Rules 202 and 416.1.

(D) Previously approved on December 9, 1981 and now deleted without replacement Rule 305.

(ii) Bay Area AQMD.

(A) New or amended Regulation 3, Rules 3–100 to 3–103, 3–200 to 3–206, 3–208 to 3–211, 3–300 to 3–311, and 3–400 to 3–408.

(iii) South Coast AQMD.

(A) New or amended Rule 1119.

(B) Amended Rule 462.

(iv) [Reserved]

(v) Merced County APCD.

(A) New or amended Rule 411.1.

(B) New or amended Rules 202 and 416.1.

(89) Revised regulations for the following APCDs submitted on March 30, 1981, by the Governor's designee.

(i) Kings County APCD.

(A) New or amended Rule 411.

(ii) Yolo-Solano County APCD.

(A) New or amended Rule 2.13(h)(6).

(iii) Yuba County APCD.

(A) Amended Rules 3.8, 3.12, and 3.15.

(B) New or amended rules 1.3, 3.0–3.7, 3.9, 3.10, 3.13, 4.0–4.5, 4.7 to 4.10, 4.12, 5.4, 6.0, 8.0, 8.2, 9.0–9.5, 9.7, and 9.8.

(C) Previously approved on April 12, 1982 in paragraph (c)(89)(iii)(B) of this section and now deleted without replacement, Rules 8.0, 8.2 and 9.0 to 9.4.

(iv) Imperial County APCD.

(A) New Rule 418.1.

(v) Monterey Bay Unified APCD.

(A) New Rule 425.

(vi) Lake County APCD.

(A) New or amended Sections 101, 227.4, 301, 1602, and Table VI.

(B) Previously approved on April 13, 1982 and now deleted without replacement Rule 301 and Table VI.

(vii) South Coast AQMD.

(A) Amended Rule 1102.1.

(90) The following amendments to the plan were submitted on December 31, 1979, by the Governor's designee.

(i) Chapter 22—Air Quality Monitoring by State and Local Air Monitoring Stations (SLAMS).

(91) The following amendments to the plan were submitted on November 13, 1979, by the Governor's designee.

(i) The Sacramento Valley Air Basin Control Strategy (Chapter 13 of the Comprehensive Revisions to the State of California Implementation Plan for the Attainment and Maintenance of Ambient Air Quality Standards): those portions pertaining to the Sacramento Metropolitan Area including the following rules:

(A) Placer County APCD (Mountain Counties Air Basin portion) Rules 212, 217, and 218.

(B) Sacramento County APCD Rules 6, 11, 12, 16, 19, and 56 (except paragraph (5)(a)(8)).

(C) Yolo-Solano County APCD Rules 2.14 and 3.4 [except paragraph (5)(a)(8)].

(ii) The Sacramento Valley Air Basin Control Strategy [Chapter 13 of the Comprehensive Revisions to the State of California Implementation Plan for the Attainment and Maintenance of Ambient Air Quality Standards]: those portions pertaining to Butte, Yuba, and Sutter Counties, including the following rules:

(A) Butte County APCD Rules 2.12f and 4–5.

(92) Revised regulations for the following APCDs submitted on May 28, 1981, by the Governor's designee.

(i) Stanislaus County APCD.

(A) New or amended Rule 409.5.

(ii) Placer County (Mountain Counties Air Basin portion).

(A) New or amended Rules 213, 216, and 223.

(B) New or amended Rules 102, 203, 211, 301, 305, 306, 324, 325, 601, and 702.

(C) Rule 214.

(D) Previously approved and now deleted without replacement Rules 601 and 702.

(iii) Lake County APCD.

(A) New Rule 216.1.

(iv) Great Basin Unified APCD.

(A) New or amended Rules 101, 300, 404–A, 423, and 424.

(B) Previously approved on April 13, 1982 in paragraph (c)(92)(iv)(A) of this section and now deleted without replacement, Rule 300.

(v) San Diego County APCD.

(A) New or amended Rules 127, 130, 131, 132, and 134.

(B) New or amended Rule 21.

(vi) South Coast AQMD.

(A) New or amended Rule 1113.

(93) Revised regulations for the following APCDs submitted on June 22, 1981, by the Governor's designee.

(i) Stanislaus County APCD.

(A) New or amended Rule 409.3.

(B) New or amended Rule 409.8.

(ii)(A) [Reserved]

(B) New Rule 28, Section 401.

(C) New or amended Regulation 5, Rule 5–401.3.

(iii) Plumas County APCD.

(A) New or amended Rules 203, 301–319, 512–516, 703, and 710.

(B) New or amended Rules 501–511 and 517–521.

(C) Previously approved on June 18, 1982 in paragraph (c)(93)(iii)(B) of this section and now deleted without replacement, Rule 509.

(iv) Sierra County APCD.

(A) New or amended Rules 203, 301–319, 512–516, 522, 523, 703, and 710.

(B) New or amended Rules 501–511 and 517–521.

(C) Previously approved on April 23, 1982 and now deleted without replacement Rule 522.

(D) Previously approved on June 18, 1982 in paragraph (c)(93)(iv)(B) of this section and now deleted without replacement, Rule 509.

(v) Kern County APCD.

(A) New or amended Rule 410.6.

(vi) El Dorado County APCD (Mountain Counties Air Basin Portion).

(A) Rules 318, 319, and 320.

(94) Revised regulations for the following APCD's submitted on October 7, 1980, by the Governor's designee.

(i) Stanislaus County APCD.

(A) New or amended Rule 411.1.

(ii) [Reserved]

(iii) San Bernardino County APCD.

(A) New or amended Rules 701, 704, 705, 707–711, and 712. Previously approved Rule 707, "Plans", submitted on June 6, 1977 is retained.

(95) Revised regulations for the following APCD's submitted on March 23, 1981, by the Governor's designee.

(i) Kern County APCD.

(A) New or amended Rule 412.1(a).

(B) Amended Rule 412.1.

(C) New or amended Rules 202, 202.1, and 426.

(ii) Ventura County APCD.

(A) Amended Rule 26.2.

(B) New or amended Rules 21, 29, 30, and 64.

(C) Previously approved on June 18, 1982 and now deleted without replacement Rule 21.

(iii) Northern Sonoma County APCD.

(A) Amended Regulation 2, Rules 100, 120, 140, 200, 220, 240, 300, and 320.

(iv) South Coast AQMD.

(A) Amended Rule 461.

(v) Stanislaus County APCD.

(A) New Rule 409.7.

(B) New or amended Rule 301.

(C) Previously approved on June 18, 1982 and now deleted without replacement Rule 301.

(vi) Humboldt County APCD.

(A) New or amended Rules 130, 200, 210, 220, 230, 240, 250, and 260.

(96) Revised regulations for the following APCDs submitted on November 3, 1980, by the Governor's designee.

(i) South Coast AQMD.

(A) New or amended Rule 1113.

(ii) Butte County APCD.

(A) New or amended Rules 1–8, 1–8.1, 1–10, 1–13, 1–14, 3–1, 3–2, 3–6, 3–11, 3–11.2, 3–11.3, 3–12, 3–12.1, 3–12.2, 3–14, 3–15, 3–16, and 3–16.1.

(iii) Glenn County APCD.

(A) New or amended Rules 2 (a,i,v, and aa), 3, 11, 11.1, 11.2, 13, 13.1, 14, 14.1, 14.2, 14.3, 15, 16, 19, 21, 21.1, 22, 75, 81, 83, 83.1, 83.2, 96, 110, and 112.

(B) Previously approved on January 26, 1982 and now deleted without replacement Rules 110 and 112.

(C) Previously approved on January 26, 1982 in paragraph (c)(96)(iii)(A) of this section and now deleted without replacement, Rule 3.

(iv) Yolo-Solano APCD.

(A) New or amended Rules 1.2 (a and g), 6.1 and 6.3.

(v) Bay Area AQMD.

(A) New Rule 20.

(97) Revised regulations for the following APCDs submitted on June 24, 1980, by the Governor's designee.

(i) Sacramento County APCD.

(A) New or amended Rule 18.

(98) Revised regulations for the following APCDs, submitted on January 28, 1981, by the Governor's designee.

(i) Sutter County APCD.

(A) Amended Rules 3.8, 3.14, and 3.15.

(B) New or amended Rules 1.0–1.3, 2.1–2.12, 2.15, 2.16, 3.0–3.7, 3.9, 3.10, 3.12, 3.13, 4.0–4.5, 4.7–4.10, 4.12–4.15, 5.0–5.19, 6.0–6.7, 7.0, 7.1, 7.2, 8.0, 8.1, 8.2, 9.0–9.7, and 9.8.

(C) Previously approved and now deleted Rules 2.1 (Control of Emissions), 2.7 (Wet Plumes), 2.15 (Fuel Burning Equipment), 2.20 (Payment of Order Charging Costs), 3.7 (Information), 4.5 (Standards for Granting Applications), 4.6 (Permits, Daily Limits, and 4.8 (Permit Forms).

(D) Previously approved on April 12, 1982 and now deleted without replacement Rules 5.0 to 5.17, 5.19, 6.0 to 6.7, and 7.0 to 7.2.

(E) Previously approved on April 12, 1982 in paragraph (c)(98)(i)(B) of this section and now deleted without replacement, Rules 8.0 to 8.2 and 9.0 and 9.4.

(ii) Siskiyou County APCD.

(A) New or amended agricultural burning regulations consisting of "General Provisions" and Articles I–VII.

(iii) Mendocino County APCD.

(A) Amended Regulation 2, Rules 100, 120, 140, 200, 220, 240, 300, 320, Appendices A, B, and C.

(iv) Del Norte County APCD.

(A) Amended Regulation 2, Rules 100, 120, 140, 200, 220, 240, 300, 320, Appendices A, B, and C.

(v) Humboldt County APCD.

(A) Amended Regulation 2, Rules 100, 120, 140, 200, 220, 240, 300, 320, Appendices A, B, and C.

(vi) Trinity County APCD.

(A) Amended Regulation 2, Rules 100, 120, 140, 200, 220, 240, 300, 320, Appendices A, B, and C.

(vii) El Dorado County APCD.

(A) New Rule 313.

(B) Rules 313, 314, 315, 316, and 317.

(viii) Ventura County APCD.

(A) New Rule 71.2.

(ix) Bay Area AQMD.

(A) New or amended Rules 1–112, 1–113, 1–115 and Regulation 9, Rule 9–3–202.

(x) South Coast AQMD.

(A) New or amended Rule 1115.

(xi) San Diego County APCD.

(99) Commitments by the Bay Area AQMD, Fresno County APCD, Kern County APCD, Monterey Bay Unified APCD, Sacramento County APCD, San Diego County APCD, Santa Barbara County APCD, South Coast AQMD, and Ventura County APCD to carry out public notification programs as required by section 127 of the Clean Air Act and in accordance with EPA guidance. These commitments were submitted by the Air Resources Board on January 22, 1981.

(100) Revised regulations for the following APCDs submitted on October 25, 1979, by the Governor's designee.

(i) San Diego County APCD.

(A) New or amended Rules 67.3 and 67.5.

(101) Revised regulations for the following APCD's submitted on July 30, 1981 by the Governor's designee.

(i) Bay Area AQMD.

(A) Regulation 8, Rule 1 (Paragraph 202) and Rule 16 (paragraph 110).

(B) New or amended Regulation 2, Rule 2–2–114; Regulation 5, Rule 5–401.13; and Manual of Procedures—Volume I to Volume VI.

(C) New or amended Regulation 8, Rule 24.

(ii) Kern County APCD.

(A) New or amended Rules 603, 609, 610, 611, and 613.

(B) New or amended Rules 108, 201, 301, 302, and 305.

(C) New or amended Rules 414 and 410.3.

(D) New or amended Rules 410.7, 412, and 414.4.

(E) Previously approved on July 6, 1982 and now deleted without replacement Rule 305 (including Southeast Desert).

(F) Previously approved on October 11, 1983 and now deleted without replacement for implementation in the Southeast Desert Air Basin, Rule 414.4.

(G) Previously approved on July 6, 1982 in paragraph (c)(101)(ii)(B) of this section and now deleted without replacement, Rules 301 and 302 (including Southeast Desert).

(102) Revised rules for the following APCDs submitted on July 14, 1981 by the Governor's designee.

(i) San Joaquin County.

(A) New Rules 409.5 and 409.6.

(ii) Stanislaus County.

(A) New Rule 409.6.

(B) New or amended Rules 409.7 and 409.8.

(iii) Merced County APCD.

(A) New or amended Rules 409.6.

(iv) South Coast AQMD.

(A) New or amended Rule 301.

(103) Revised rules for the following APCDs, submitted on October 23, 1981 by the Governor's designee.

(i) Kings County.

(A) Amended Rule 412.2.

(ii) San Diego County APCD.

(A) New or amended Rule 67.4 and 67.6.

(B) New or amended Rules 42, 64, 101–103, and 109.

(C) New Rule 67.8.

(D) Previously approved on July 6, 1982 and now deleted without replacement Rule 42.

(E) Previously approved on July 6, 1982 in paragraph (c)(103)(ii)(B) of this section and now deleted Rule 109 (now replaced by Rule 101).

(iii) Santa Barbara County APCD.

(A) Rule 325.

(B) New or amended Rules 601–608 and 609.

(C) Previously approved and now deleted Rules 609 (Scientific Committee) and 610 (Emergency Action Committee).

(iv) Ventura County APCD.

(A) Amended Rule 70(E).

(B) New or amended Rules 2, 12, 16, 23, 41, 42, and 74.2.

(C) New Rule 74.5.

(D) Amended Rule 74.9.

(E) Previously approved on June 18, 1982 and now deleted without replacement Rule 42.

(v) Sacramento County APCD.

(A) Amended Rule 20.

(B) New or amended Rules 50, 70, and 14.

(C) New Rules 4A, 4B, 10 and 51.

(vi) Del Norte County APCD.

(A) Amended Rules 300 and 310.

(B) Previously approved on April 13, 1982 and now deleted without replacement Rules 300 and 310.

(vii) Humboldt County APCD.

(A) Amended Rules 300 and 310.

(B) Previously approved on April 13, 1982 and now deleted without replacement Rules 300 and 310.

(viii) Mendocino County APCD.

(A) Amended Rules 300 and 310.

(B) Previously approved on April 13, 1982 and now deleted without replacement Rules 300 and 310.

(ix) Northern Sonoma County APCD.

(A) Amended Rules 300 and 310.

(B) Previously approved on April 13, 1982 and now deleted without replacement Rules 300 and 310.

(x) Trinity County APCD.

(A) Amended Rules 300 and 310.

(B) Previously approved on April 13, 1982 and now deleted without replacement Rules 300 and 310.

(xi) Great Basin Unified APCD.

(A) Amended Rule 301.

(B) Previously approved on April 13, 1982 in paragraph (c)(103)(xi)(A) of this section and now deleted without replacement, Rule 301.

(xii) San Luis Obispo County APCD.

(A) New or amended Rules 301, 302, and 411.

(B) Previously approved on June 18, 1982 and now deleted without replacement Rule 301.

(C) Previously approved on June 18, 1982 and now deleted without replacement Rule 301.

(xiii) El Dorado County APCD (Mountain Counties Air Basin).

(A) New or amended Rules 301–319, 501, 703, and 710.

(B) Previously approved on May 27, 1982 and now deleted without replacement rule 501.

(C) Previously approved on May 27, 1982 in paragraph (c)(103)(xiii)(A) of this section and now deleted without replacement, Rules 318 and 319.

(xiv) Imperial County APCD.

(A) New or amended Rules 101, 301, 302, 305–307.

(B) Previously approved on May 27, 1982 and now deleted without replacement Rule 305.

(C) Previously approved on May 27, 1982 in paragraph (c)(103)(xiv)(A) of this section and now deleted without replacement, Rules 301, 302, 306, and 307.

(xv) Shasta County APCD.

(A) Amended Rule 2:11.

(xvi) Monterey Bay Unified APCD.

(A) Amended Rules 301, 601, and 602.

(xvii) Tuolumne County APCD.

(A) New or amended Rules 203, 301–319, 501–521, 703, and 710.

(B) Previously approved on May 27, 1982 and now deleted without replacement Rule 516.

(C) Previously approved on May 27, 1982 in paragraph (c)(103)(xvii)(A) of this section and now deleted without replacement, Rule 509.

(xviii) South Coast AQMD.

(A) New or amended Rules 504.1, 218, 219, 220, 409, and 502.

(B) Previously approved on July 6, 1982 and now deleted without replacement Rule 504.1.

(104) Revised regulations for the following APCD's submitted on November 5, 1981 by the Governor's designee.

(i) Bay Area AQMD.

(A) Regulation 2, Rule 1: 2–1–101, 2–1–102, 2–1–111, 2–1–112, 2–1–201 to 2–1–205, 2–1–301 to 2–1–306, 2–1–401 to 2–1–410, and 2–1–420 to 2–1–423; Rule 2: 2–2–101 to 2–2–114, 2–2–201 to 2–2–208, 2–2–301 to 2–2–306, 2–2–310, and 2–2–401 to 2–2–410.

(ii) South Coast AQMD.

(A) New or amended Rule 444.

(iii) Fresno County APCD.

(A) New or amended Rule 409.6.

(105) Schedule to study Nontraditional Total Suspended Particulate Sources and commitment to implement control measures necessary to provide for attainment, submitted on November 18, 1981 by the Governor's designee.

(106) The *Southeast Desert Air Basin Control Strategy* for ozone (Chapter 19 of the Comprehensive Revisions to the State of California Implementation

Plan for the Attainment and Maintenance of the Ambient Air Quality Standards) was submitted by the Governor's designee on February 15, 1980. The portions of the *Southeast Desert Air Basin Control Strategy* identified in Table 19–1 (Summary of Plan Compliance with Clean Air Act Requirements), except those which pertain to Imperial County, comprise the plan. The remaining portions are for informational purposes only.

(107) On August 11, 1980, the Governor's designee submitted a revision to the State Implementation Plan which adds the Southeast Desert Air Basin portion of Riverside County into the South Coast Air Quality Management District.

(108) On November 28, 1980, the Governor's designee submitted a revision to the State Implementation Plan which deletes Rule 67, for the San Bernardino County APCD as applied to new sources.

(109) Three items submitted for Fresno County and the Sacramento Metropolitan Area by the Governor's designee on October 9, 1980:

(i) *Air Quality Planning Addendum-Council of Fresno County Governments 1979–84 Overall Work Program.*

(ii) *Emission Inventory, 1976* for the Sacramento Metropolitan Area.

(iii) *Air Quality Plan Technical Appendix, January 1979* for the Sacramento Metropolitan Area.

(110) Five items submitted for Ventura County by the Governor's designee on April 1, 1980:

(i) *Appendix B–81, Empirical Kinetic Modeling Approach:* Ozone Formation, Transport, and Concentration Relationships in Ventura County; Update of Emission Reduction Required for Attainment of Ozone NAAQS.

(ii) *Letter:* Jan Bush to Mike Redemer, January 23, 1981.

(iii) *Letter and enclosures:* Janet Lyders to Mike Scheible, February 6, 1981.

(iv) *Letter and enclosures:* Jan Bush to William Lockett, December 15, 1980.

(v) *Letter and enclosures:* Jan Bush to William Lockett, October 23, 1980.

(111) Four items submitted for Ventura County by the Governor's designee on July 16, 1981:

(i) Attachment V—Transportation Control Measures.

(ii) Ventura Air Quality Management Plan, Appendix O, *Plan for Attainment of Standards for Total Suspended Particulates In Ventura County: Interim Report,* July, 1980.

(iii) Attachment IV—Population Forecasts.

(iv) Attachment VI—Implementation of Emission Reductions Required for Attainment of TSP Standards.

(112) Plan for Attainment of the Federal Secondary Total Suspended Particulate Standard in Santa Clara County, an addendum to the San Francisco Bay Area Air Basin Control Strategy (Chapter 15) submitted on March 16, 1981, by the Governor's designee.

(113) Supplemental material for the San Diego Nonattainment Area Plan submitted on July 13, 1981, by the Governor's designee.

(114) Supplemental material for the San Diego Nonattainment Area Plan submitted on August 31, 1981, by the Governor's designee.

(115) Supplemental material for the San Diego Nonattainment Area Plan submitted on December 8, 1981, by the Governor's designee.

(116) Supplemental material for the South Coast Nonattainment Area Plan submitted on July 24, 1981, by the Governor's designee.

(117) Supplemental material for the South Coast Nonattainment Area Plan submitted on December 24, 1981, by the Governor's designee.

(118) Supplemental material for the South Coast Nonattainment Area Plan submitted on February 18, 1982, by the Governor's designee.

(119) Revised regulations for the following APCDs submitted on April 17, 1980, by the Governor's designee.

(i) El Dorado County APCD (Mountain Counties Air Basin).

(A) New or amended Rules 502–520.

(B) Rule 102.

(C) Previously approved on May 27, 1982 and now deleted without replacement Rules 502 to 508, 510 to 513, 515, 517 to 519, and 521.

(D) Previously approved on May 27, 1982 in paragraph (c)(119)(i)(A) of this section and now deleted without replacement, Rule 509.

(ii) Mendocino County APCD.

(A) New or amended Rules 130, 200, 210, 220, 230, 240, 250, and 260.

(120) *The Mountain Counties Air Basin Control Strategy* for ozone (Chapter 9 of the "Comprehensive Revisions to the State of California Implementation Plan for the Attainment and Maintenance of the Ambient Air Quality Standards" was submitted by the Governor's designee on April 3, 1981. The submittal also included revised regulations for the following APCD's.

(i) El Dorado County APCD (Mountain Counties Air Basin portion).

(A) Rules 401, 402, 403, 404, 405, 406, 407, 410, 411, 415, 416, 418, 419, 420, 421, 422, 423, 424, and 425.

(B) Previously approved on July 7, 1982 and now deleted without replacement Rules 401 to 407, 410 to 411, 415 to 416, and 418 to 424.

(121) Revised regulations for the following APCDs submitted on March 1, 1982 by the Governor's designee.

(i) South Coast AQMD.

(A) New or amended Rule 474.

(B) Amended Rules 107, 1107, 1108.1, 1125 and 1126.

(C) Amended Rule 1110.

(D) Previously approved on October 11, 1983 and now deleted without replacement Rule 107.

(ii) San Diego County APCD.

(A) New or amended Rules 62 and 53.

(B) Amended Rule 67.6(e).

(C) Amended Rule 17, adopted on November 25, 1981.

(iii) Lake County APCD.

(A) New or amended Rule 655.

(iv) Bay Area AQMD.

(A) Amended Regulation 8, Rules 2–112 and 5–313.4.

(v) Ventura County APCD.

(A) Amended Rule 74.6.

(122) [Reserved]

(123) Supplemental material for the Kern County Nonattainment Area Plan submitted on March 4, 1982, by the Governor's designee.

(124) Revised regulations for the following APCDs submitted on August 6, 1982, by the Governor's designee.

(i) Bay Area AQMD.

(A) New or amended Regulation 1: Rules 1–100, 1–112, 1–205, 1–233, 1–234, 1–235, 1–520, 1–522, 1–530, 1–540, 1–543, 1–544, and 1–602; Regulations 4: Rule 4–303; Regulation 5: Rules 5–208 and 5–402; and deletion of Regulation 6: Rule 6–132.

(B) [Reserved]

(C) Amended Regulation 8, Rules 2, 4, 5, 8 and 10.

(D) New or amended Regulation 2: Rules 2–1–207, 2–1–208, 2–1–301, 2–1–304, and 2–1–307.

(E) Amended Regulation 8, Rule 23.

(ii) Lake County APCD.

(A) New or amended Rules 630, 631, 660.1, 660.2, and 660.3.

(B) Previously approved on November 10, 1982 in paragraph (c)(124)(ii)(A) of this section and now deleted without replacement, Rules 660.1, 660.2, and 660.3.

(iii) San Joaquin County APCD.

(A) New or amended Rules 203, 415, 503, and 521.

(B) Previously approved on November 10, 1982 and now deleted without replacement Rules 503 and 521.

(iv) South Coast AQMD.

(A) New or amended Rule 407.

(B) Amended Rule 1107.

(C) [Reserved]

(v) Stanislaus County APCD.

(A) New or amended Rules 203 and 503.

(B) New or amended Rules 409.4 and 409.8.

(C) Previously approved on November 10, 1982 and now deleted without replacement Rule 503.

(vi) Del Norte County APCD.

(A) New or amended Rules 616, 618, and 620.

(B) New or amended Rule 230, adopted December 14, 1981.

(C) Previously approved on Novmber 10, 1982 and now deleted without replacement Rules 616 and 618.

(vii) Humboldt County APCD.

(A) New or amended Rules 616, 618, and 620.

(B) New or amended Rule 230, adopted December 8, 1981.

(C) Previously approved on November 10, 1982 and now deleted without replacement Rules 616 and 618.

(viii) Mendocino County APCD.

(A) New or amended Rules 610, 616, 618, and 620.

(B) New or amended Rules 130 (introductory text, b1, m1, p5, and s2), and 230, adopted January 5, 1982.

(C) Previously approved on November 10, 1982 and now deleted without replacement Rules 616 and 618.

(ix) Northern Sonoma County APCD.

(A) New or amended Rules 616, 618, and 620.

(B) New or amended Rules 130 (introductory text, b1, n1, p5, and s2), 220(c), 230, and 260, adopted February 23, 1982 and rule 200, adopted June 15, 1982.

(C) Previously approved on November 10, 1982 and now deleted without replacement Rules 616 and 618.

(x) Trinity County APCD.

(A) New or amended Rules 616, 618, and 620.

(B) New or amended Rule 230, adopted December 7, 1981.

(C) Previously approved on November 10, 1982 and now deleted without replacement Rules 616 and 618.

(xi) Kern County APCD.

(A) New or amended Rule 411.

(xii) Butte County APCD.

(A) New or amended Rules 4–6 and 4–6A.

(B) Previously approved on June 1, 1983 in paragraph (xii)(A) of this section and now deleted Rules 4–6 and 4–6A.

(125) Revised Regulations for the following APCDs submitted on May 20, 1982 by the Governor's designee.

(i) San Diego County APCD.

(A) New or amended Rule 40.

(ii) South Coast AQMD.

(A) New or amended Rule 431.1.

(B) New or amended Rules 303 and 304.

(C) [Reserved]

(D) Amended Rules 442, 467 and 1128.

(iii) Monterey Bay Unified APCD.

(A) New or amended Rule 422.

(B) New Rule 428.

(iv) Shasta County APCD.

(A) New or amended Rules 2:6, 2:7, 2:8, 2:9, 2:11 and 4:4.

(B) Previously approved on November 10, 1982 and now deleted without replacement Rule 4.4.

(C) Previously approved on November 10, 1982 in paragraph (c)(125)(iv)(A) of this section and now deleted without replacement, Rule 2:11.

(v) Tulare County APCD.

(A) New or amended Rules 104 and 405.

(B) Amended Rule 410.1.

(C) Previously approved on November 10, 1982 in paragraph (c)(125)(v)(A) of this section and now deleted without replacement, Rule 104.

(vi) Yolo-Solano APCD.

(A) New or amended Rules 4.1 and 4.2.

(B) Previously approved on November 10, 1982 and now deleted without replacement Rules 4.1 and 4.2.

(vii) Yuba County APCD.

(A) New or amended Rule 9.6.

(viii) Bay Area AQMD.

(A) Manual of Procedures: Volumes I, V and VI.

(B) Amended Regulation 8, Rules 7, 14, 18 and 19.

(ix) San Joaquin County APCD.

(A) Amended Rule 412.

(126) Revised regulations for the following APCDs submitted on November 8, 1982 by the Governor's designee.

(i) Sacramento County APCD.

(A) New or amended Rules 59 and 70.

(B) Amended Rules 16 and 19.

(C) Previously approved on June 1, 1983 and now deleted without replacement Rule 70.

(ii) Santa Barbara County APCD.

(A) New or amended Rule 210D.

(B) Previously approved on June 1, 1983 in paragraph (c)(126)(ii)(A) of this section and now deleted without replacement, Rule 210D.

(iii) Stanislaus County APCD.

(A) New or amended Rules 110, 202, and 302.

(B) Amended Rules 409.8, 411 and 411.1(G).

(C) Previously approved on June 18, 1982 and now deleted without replacement Rule 302.

(iv) South Coast AQMD.

(A) New or amended Rules 708.3 and 1105.

(v) Tulare County APCD.

(A) New or amended Rule 519.

(B) Amended Rules 410.3 and 410.4.

(C) Previously approved on June 1, 1983 and now deleted without replacement Rule 519.

(vi) Yolo-Solano County APCD.

(A) New or amended Rule 6.1.

(B) Amended Rule 2.22.

(127) Revised regulations for the following APCDs submitted on February 3, 1983 by the Governor's designee.

(i)(A) [Reserved]

(B) Amended Regulation 3: Rules 3–102, 3–302, 3–302.1, 3–303, and Schedule A.

(C) Amended Rules 13 and 29.

(D) New or amended Regulation 2: Rules 2–2–113.2, 2–2–115, 2–2–209, 2–2–210, 2–2–211, 2–2–303.2, 2–2–304.1, 2–2–304.2, and 2–2–404; and Regulation 3: Rule 3–312.

(ii) Fresno County APCD.

(A) Amended Rules 406 and 408.

(B) Amended Rule 409.1.

(iii) North Coast Unified AQMD.

(A) New Rule 350.

(B) Previously approved on November 18, 1983 and now deleted without replacement Rule 350.

(iv) Imperial County APCD.

(A) Amended Rule 409.

(B) Amended Rule 424.

(v) Monterey Bay Unified APCD.

(A) New or amended Rule 601.

(B) Amended Rule 301, submitted on February 3, 1983.

(C) Previously approved on August 9, 1985 in paragraph (c)(127)(v)(B) of this section and now deleted without replacement, Rule 301.

(vi) San Luis Obispo County APCD.

(A) Amended Rule 302.

(B) Previously approved on November 18, 1983 and now deleted without replacement Rule 302.

(vii) South Coast AQMD.

(A) New or amended Rules 301.1, 302, 303, and Resolutions 82–23 and 82.35.

(B) New or amended Rules 461, 1102, and 1102.1.

(C) New or amended Rules 301, 304, 401(b) and 1148.

(D) Previously approved on November 18, 1983 and now deleted without replacement Rule 303.

(E) Previously approved on October 19, 1984 and now deleted without replacement for implementation in the Antelope Valley Air Pollution Control District Rule 1148.

(F) Previously approved on November 18, 1983 in paragraph (c)(127)(vii)(A) of this section and now deleted without replacement for implementation in the Antelope Valley Air Pollution Control District and the South Coast Air Quality Management District, Rule 302.

(G) Previously approved on October 19, 1984 in paragraph (c)(127)(vii)(C) of this section and now deleted without replacement for implementation in the Antelope Valley Air Pollution Control District and the South Coast Air Quality Management District, Rule 304.

(viii) Ventura County APCD.

(A) New or amended Rule 41.

(B) Amended Rule 74.2.

(128) The 1982 Ozone Air Quality Plan for the Monterey Bay Region was submitted on December 31, 1982 and January 14, 1983 by the Governor's designee.

(129) The 1982 Ozone Air Quality Plan for Stanislaus County and the 1982 Ozone and CO plan for San Joaquin County were submitted on December 1, 1982 by the Governor's designee.

(130) The 1982 Ozone Air Quality Plan for Santa Barbara County was submitted on December 31, 1982 by the Governor's designee.

(131) [Reserved]

(132) Revised regulations for the following APCDs submitted on June 28, 1982, by the Governor's designee.

(i) Kern County APCD.

(A) Amended Rule 425.

(B) Previously approved on May 3, 1984 and now deleted without replacement, Rule 425.

(133) The enabling legislation, Chapter 892, Statutes of 1982, (Senate Bill No. 33) for a California motor vehicle inspection and maintenance program and the California Air Resources Board's Executive Order G–125–15 submitted on September 17, 1982 by the Governor's designee.

(134) A schedule to implement the California motor vehicle inspection and maintenance (I/M) program, the California Air Resources Board's Executive Order G–125–33, and local resolutions and requests from the Bay Area Air Quality Management District, Sacramento County APCD, Placer County APCD, Yolo-Solano APCD, San Diego County APCD, South Coast Air Quality Management District and Ventura County APCD to have the State implement the I/M program, submitted on July 26, 1983 by the Governor's designee.

(135) The 1982 Ozone and CO Air Quality Plan for the San Francisco Bay Air Basin was submitted on February 4, 1983 by the Governor's designee.

(136) The 1982 Ozone and CO Air Quality Plan for the San Diego Air Basin was submitted on February 28 and August 12, 1983 by the Governor's designee.

(137) Revised regulations for the following APCDs was submitted on July 19, 1983 by the Governor's designee.

(i) Kern County APCD.

(A) New or amended Rules 301.1 and 302.

(B) Amended Rule 410.1

(C) Previously approved on February 1, 1984 in paragraph (c)(137)(i)(A) of this section and now deleted without replacement, Rules 301.1 and 302 (including Southeast Desert).

(ii) Merced County APCD.

(A) New or amended Rules 104, 108, 113, 202, 209.1, 301, 305, 407 and 519.

(B) Amended Rule 409.1.

(C) New or amended Rules 409.4, 409.5, 411 and 411.1.

(D) Previously approved on February 1, 1984 and now deleted without replacement Rules 305 and 319.

(E) Previously approved on February 1, 1984 in paragraph (c)(137)(ii)(A) of this section and now deleted without replacement, Rules 104, 113, and 301 (paragraphs a, b, and h).

(iii) Sacramento County APCD.

(A) New or amended Rule 7.

(B) Amended Rule 17.

(iv) San Diego County APCD.

(A) New or amended Rules 10 and 40.

(B) Amended Rules 67.3, 67.4 and 67.6.

(C) Previously approved on February 1, 1984 and now deleted without replacement Rule 40.

(v) San Luis Obispo County APCD.

(A) New or amended Rule 212.

(vi) Shasta County APCD.

(A) New or amended Rules 2.18, 3.4, and 3.15.

(B) Amended Rules 3.3(b), 3.4(d) and 3.15(c).

(vii) South Coast AQMD.

(A) New or amended Rules 502, 1207 and deletion of 301.1.

(B) New or amended Rules 301, 301.1, 301.2 and 431.1.

(C) Previously approved on February 1, 1984 and now deleted without replacement Rule 502.

(D) Previously approved on February 1, 1984 and now deleted without replacement for implementation in the Antelope Valley Air Pollution Control District Rule 1207.

(viii) Ventura County APCD.

(A) Amended Rule 41.

(B) Previously approved on February 1, 1984 and now deleted without replacement Rule 41.

(ix) Monterey Bay Unified APCD.

(A) Amended Rule 426.

(x) Placer County APCD (Mountain Counties Air Basin portion).

(A) Amended Rule 218.

(xi) Fresno County APCD.

(A) Amended Rule 409.4.

(138) Revised regulations for the following APCDs was submitted on April 11, 1983 by the Governor's designee.

(i) Butte County APCD.

(A) Amended Rules 1–36, 4–2, 4–3, 4–11, and 5–3.

(B) Previously approved on November 18, 1983 in paragraph (i)(A) of this section and now deleted without replacement Rules 4–3 and Rule 4–11.

(C) Previously approved on November 18, 1983 in paragraph (c)(138)(i)(A) of this section and now deleted without replacement, Rules 4–2, 4–11, and 5–3.

(ii) El Dorado County APCD.

(A) New or amended Rules 203, 206, 207, 209–212, 221–226, 521, 609–612 and 700–703.

(B) Amended Rules 214–220.

(C) New Rule 213.

(D) Previously approved on November 18, 1983 and now deleted without replacement Rule 521.

(E) Previously approved on November 18, 1983 in paragraph (c)(138)(ii)(A) of this section and now deleted without replacement, Rules 609 to 612 (Mountain Counties Air Basin).

(iii) Fresno County APCD.

(A) New or amended Rule 301.

(B) Previously approved on November 18, 1983 in paragraph (c)(138)(iii)(A) of this section and now deleted without replacement, Rule 301.

(iv) Lake County APCD.

(A) New or amended Rules 900 and 902.

(B) Previously approved on November 18, 1983 in paragraph (c)(138)(iv)(A) of this section and now deleted without replacement, Rules 900 and 902.

(v) Madera County APCD.

(A) New or amended Rules 103–117, 301–305, 401–405, 421–425, 501–503, 519, 606, 610 and 611.

(B) Amended Rules 409, 410, and 417–419.

(C) New or amended Rules 406, 407, 408, 411 and 420.

(D) Previously approved on November 18, 1983 and now deleted without replacement Rules 305 and 502 to 503.

(E) Previously approved on November 18, 1983 in paragraph (c)(138)(v)(A) of this section and now deleted without replacement, Rules 105, 108, 111, and 301 to 304.

(vi) Monterey Bay Unified APCD.

(A) New or amended Rules 200, 201(p), 501, 503, 506, 507 and 508.

(B) Amended Rule 425.

(vii) Ventura County APCD.

(A) New or amended Rule 59c.

(viii) Kern County APCD.

(A) Amended Rule 414.1.

(ix) Kings County APCD.

(A) Amended Rule 410.1.

(139) Amendments to "Chapter 27—California Lead Control Strategy" was submitted on April 8, 1983 by the Governor's designee.

(140) Revised regulations for the following APCDs were submitted on August 30, 1983 by the Governor's designee.

(i) Bay Area AQMD.

(A) Amended Regulation 3: Rules 3–100 through 3–103, 3–200 through 3–211, 3–300 through 3–313 and 3–400 through 3–409.

(B) New Regulation 8, Rule 30.

(C) Previously approved on May 3, 1984 and now deleted without replacement Rule 3–301.

(D) Previously approved on May 3, 1984 in paragraph (c)(140)(i)(A) of this section and now deleted without replacement, Regulation 3: Rules 3–100 through 3–103, 3–200 through 3–211, 3–300, 3–302 through 3–313, and 3–400 through 3–409.

(ii) Kern County APCD.

(A) New or amended Rules 405, 408, 409, and 424.

(B) Previously approved on May 3, 1994 and now deleted without replacement for implementation in the Southeast Desert Air Basin, Rule 408.

(C) Previously approved on May 3, 1984 and now deleted without replacement for implementation in the Southeast Desert Air Basin Rule 424.

(iii) Stanislaus County APCD.

(A) New or amended Rules 109 and 213.

(B) Amended Rule 409.1.

(C) Previously approved on May 3, 1984 in paragraph (c)(140)(iii)(A) of this section and now deleted without replacement, Rule 109.

(iv) Yolo-Solano APCD.

(A) Amended Rule 2.13(1).

(141) The 1982 CO Air Quality Plan for the Lake Tahoe Air Basin was submitted on December 20, 1982 by the Governor's designee.

(142) The 1982 ozone and CO Air Quality Plan for the Sacramento nonattainment area submitted on January 10, 1984 by the Governor's designee, except for the attainment and RFP demonstration portions of the ozone plan.

(143) Revisions to the 1982 ozone and CO Air Quality Plan for the Sacramento nonattainment area submitted on February 10, 1984.

(144) The 1982 Ozone and CO Air Quality Management Plan for the South Coast Air Basin submitted on December 31, 1982 and subsequently amended on February 15, and June 28, 1984 by the Governor's designee, except for:

(i) The attainment and RFP demonstration portions of the plan.

(ii) The emission reduction credit for the New Source Review control measure.

(145) The 1982 Ozone Air Quality Management Plan for Ventura County submitted on December 31, 1982 by the Governor's designee except for the attainment and RFP demonstration portions of the plan.

(146) The 1982 Ozone and CO Clean Air Plan for the Fresno nonattainment area submitted on December 1, 1982 by the Governor's designee, except for the attainment and RFP demonstration portions of the plans.

(147) [Reserved]

(148) Revised regulations for the following APCDs were submitted on October 27, 1983 by the Governor's designee.

(i) Bay Area AQMD.

(A) New or amended Regulations 6–303.4, 9–1–100, 9–1–101, 9–1–110, 9–1–200 through 9–1–205, 9–1–300 through 9–1–312, 9–1–400 through 9–1–404, 9–1–500 through 9–1–503, 9–1–600 through 9–1–605 and 5–401.13.

(B) Amended Regulation 8, Rules 3, 9, 10, 20, 22, 25 and 28.

(ii) El Dorado County APCD.

(A) New or amended Rules 102, 226, 227, and 228.

(B) New Rules 224 and 225.

(C) Previously approved on May 3, 1984 in paragraph (c)(148)(ii)(A) of this section and now deleted without replacement, Rule 226.

(iii) Monterey Bay Unified APCD.

(A) New or amended Rules 407, 410, and 411.

(B) Previously approved on May 3, 1984 in (c)(148)(iii)(A) of this section

and now deleted without replacement Rule 407.

(iv) San Diego County APCD.

(A) New or amended Rule 68.

(B) New Rule 67.9.

(v) Shasta County APCD.

(A) New or amended Rule 2.6.

(vi) South Coast AQMD.

(A) New or amended Rules 1105 and 1111.

(B) New or amended Rules 1113, 1122, 1136, 1141 and 1145.

(vii) Ventura County APCD.

(A) New or amended Rule 30.

(viii) Madera County APCD.

(A) Amended Rule 416.

(149) Revised regulations for the following APCD's submitted on January 20, 1983 by the Governor's designee.

(i) California State.

(A) New or amended California statewide regulations: Test Procedures for Determining the Efficiency of Gasoline Vapor Recovery Systems at Service Stations; Certification and Test Procedures for Vapor Recovery Systems of Gasoline Delivery Tanks; Test Procedure for Gasoline Vapor Leak Detection Using Combustible Gas Detector.

(150) Revised regulations for the following APCD's submitted August 2, 1983, by the Governor's designee.

(i) Kings County APCD.

(A) New Rule 414.4.

(ii) Yuba County APCD.

(A) Amended Rule 3.9.

(151) [Reserved]

(152) Amendments to "Chapter 27—California Lead Control Strategy" were submitted on February 22, 1984 by the Governor's designee.

(153) Revised regulations for the following APCD's were submitted on March 14, 1984 by the Governor's designee.

(i) Lake County APCD.

(A) New or amended Rule 602.

(ii) North Coast Unified AQMD.

(A) New or amended Rules 100, 120, 130 [Paragraphs (d1) and (s5)], 160 (except (a) and non-criteria pollutants), 240, 500, 520, 600, 610 and Appendix B (except (D)(1)(e)).

(B) New or amended Rules, 130, 130 (b1, m2, n1, p5, s2), 200 (a), (b), (c)(1–2), and (d), 220(c), and 260.

(C) Previously approved on December 5, 1984 and now deleted without replacement Rules 600 and 610.

(D) Previously approved on December 5, 1984 in paragraph (c)(153)(ii)(A) of this section and now deleted without replacement, Rules 500 and 520.

(iii) San Diego APCD.

(A) New or amended Rules 2, 52 and 53.

(B) Amended Rules 67.0 and 67.1 (deletion).

(iv) San Joaquin APCD.

(A) New or amended Rules 110, 202 and 407.

(B) Amended Rules 409.1 and 409.4.

(v) Bay Area AQMD.

(A) New Regulation 8, Rules 31 and 32.

(vi) Kern County APCD.

(A) Amended Rule 410.1.

(vii) South Coast AQMD.

(A) New or amended Rules 1108.1 and 1141.1.

(B) New Rule 1158, adopted 12–2–83.

(viii) Ventura County APCD.

(A) Amended Rule 74.2

(154) Revised regulations for the following APCD's were submitted on April 19, 1984 by the Governor's designee.

(i) Mendocino County APCD.

(A) New or amended Regulation 1: Rules 100, 120, 130 [Paragraphs (d1) and (s5)], 160 (except (a) and non-criteria pollutants), 240, 500, 520, 600, 610 and Appendix B (except (D)(1)(e)) and Regulation 2: Rules 101, 102, 200, 301, 302, 303, 304, 305, 401, 501, and 502.

(B) New or amended Rules, 130, 200, 220(a)(1&3), (b)(1, 2, 5, and 7), (c), and 260.

(C) Previously approved on December 5, 1984 and now deleted without replacement Rules 600 and 610.

(D) Previously approved on December 5, 1984 in paragraph (c)(154)(i)(A) of this section and now deleted without replacement, Rules 500, 520, and Regulation 2: Rule 502.1.

(ii) Monterey Bay Unified APCD.

(A) New or amended Rules 101, 200, 203 and 422.

(B) Amended Rule 426.

(iii) Sacramento County APCD.

(A) New or amended Rules 101, 102, 103, 403–410, 420, 501, 601, 602 and 701.

(B) Amended Rules 441, 442, 444–446 and 448–455.

(C) Previously approved on December 5, 1984 and now deleted without replacement Rules 601 and 602.

(iv) San Luis Obispo County APCD.

(A) New or amended Rule 105.

(v) Shasta County APCD.

(A) New or amended Rules 1:2, 2:2 (repealed), 2:3 (repealed), 2:6 2:26 (repealed), 2:27 (repealed), and 3:2.

(B) Amended Rule 3:4, adopted on January 3, 1984.

(vi) Bay Area AQMD.

(A) New or amended Regulation 8, Rules 6, 7, 29 and 33.

(B) Amended Regulation 9, Rule 4 adopted December 7, 1983.

(vii) South Coast AQMD.

(A) Amended Rule 1124.

(B) [Reserved]

(155) Revised regulations for the following APCD's submitted July 10, 1984, by the Governor's designee.

(i) Bay Area AQMD.

(A) New or amended Regulation 8, Rules 11, 34 and 35.

(ii) El Dorado County APCD.

(A) New or amended Rules 215, 216 (deletion), 216 and 217 (deletion).

(B) New or amended Rule 217.

(iii) Madera County APCD.

(A) New or amended Rules 409 and 410.

(B) New or amended Rules 203 and 404.

(iv) South Coast AQMD.

(A) Amended Rule 1113.

(B) New or amended Rules 401 and 1305.

(v) North Coast Unified AQMD.

(A) New or amended Regulation 2.

(B) New or amended Rules 130 (b2, m1, p3, and s7), Chapter II, 200 (c)(3–6) and 220 (a) and (b).

(C) Previously approved on January 29, 1985 in paragraph (c)(155)(v)(A) of this section and now deleted without replacement, Regulation 2: Rule 502.

(vi) Shasta County APCD.

(A) Amended Rule 1:2.

(156) Revised regulations for the following APCD's were submitted on October 19, 1984 by the Governor's designee.

(i) Bay Area AQMD.

(A) New or amended Rules 2–1 and 8–36.

(ii) Merced County APCD.

(A) New or amended Rules 112, 409.1, and 409.4.

(B) Previously approved on January 29, 1985 in paragraph (c)(156)(ii)(A) of this section and now deleted without replacement, Rule 112.

(iii) North Coast Unified AQMD.

(A) New or amended Rules 160 and 460.

(B) Amended Rules 130(c, 1) and 240(e).

(iv) San Diego County APCD.

(A) New or amended Rules 61.0, 61.2, 61.8, and 67.3.

(v) Yolo-Solano APCD.

(A) New or amended Rule 2.21.

(vi) Northern Sonoma County APCD.

(A) New or amended Rules 130 (b2, m1, p3, p3a, and s7), Chapter II, 220(B).

(vii) South Coast AQMD.

(A) New or amended Rule 463, adopted 6–1–84 and 1141.2, adopted 7–6–84.

(157) [Reserved]

(158) Revised regulations for the following Districts were submitted on December 3, 1984 by the Governor's designee.

(i) Mendocino County APCD.

(A) New or amended Rules 1–160, 1–240, 1–460 and 2–502.2.

(B) New or amended Rules 130 (b2, m1, p3, s7), Chapter II, 220 (a)(2) and (b)(3, 4, 6, 8 and 9).

(C) Previously approved on May 9, 1985 in paragraph (c)(158)(i)(A) of this section and now deleted without replacement, Rule 2–502.2.

(159) Revised regulations for the following APCD's were submitted on February 6, 1985 by the Governor's designee.

(i) Sacramento County APCD.

(A) Amended Rule 202 (except for a) sections 104 and 105 as they apply to volatile organic compounds and nitrogen oxides, b) sections 109 and 229, and c) the portion of section 405 which concerns stack heights [under NSR]).

(ii) Fresno County APCD.

(A) New or amended Rules 409.7 and 413.1, adopted on October 2, 1984.

(iii) Monterey Bay Unified APCD.

(A) New or amended Rules 100 to 106, 200 to 206, 208 to 214, 400, 401, 405, 406, 408 to 415, 417 to 422, 425 to 428, 500 to 506, 600 to 617, 700 to 713, 800 to 816, and 900 to 904, adopted on December 13, 1984.

(B) Previously approved on July 13, 1987 and now deleted without replacement Rules 600 to 617 and 800 to 816.

(C) Previously approved on July 13, 1987 in (c)(159)(iii)(A) of this section and now deleted without replacement Rules 405 and 406.

(D) Previously approved on July 13, 1987 in paragraph (c)(159)(iii)(A) of this section and now deleted without replacement, Rule 104.

(E) Previously approved on July 13, 1987 in (c)(159)(iii)(A) of this section and now deleted without replacement, Rule 209.

(F) Previously approved on July 13, 1987 in (c)(159)(iii)(A) of this section and now deleted without replacement Rules 409, 410, 411, and 422.

(iv) Sacramento County APCD.

(A) New or amended Rules 201 (sections 100–400), 404 (sections 100–300), and 443 (sections 100–400), adopted on November 20, 1984.

(B) Amended Rule 447 adopted November 20, 1984.

(v) South Coast AQMD.

(A) New or amended Rules 1104 and 1125, adopted on December 7, 1984.

(B) Amended Rule 1141, adopted on November 2, 1984.

(C) Amended Rule 1105 adopted September 21, 1984.

(D) New Rule 1117 adopted January 6, 1984.

(E) Previously approved on July 12, 1990 and now deleted without replacement for implementation in the Antelope Valley Air Pollution Control District Rules 1105 and 1117.

(vi) Stanislaus County APCD.

(A) New or amended Rules 202(O), 411, and 416.1, adopted on September 18, 1984.

(vii) Yolo-Solano County APCD.

(A) Amended Rule 2.21.a.7. (a) and (b) adopted November 21, 1984.

(160) Revised regulations for the following APCD's were submitted on April 12, 1985, by the Governor's designee.

(i) Incorporation by reference.

(A) Bay Area AQMD.

(*1*) Revisions to Regulation 8, Rule 33, adopted on January 9, 1985.

(B) San Luis Obispo County APCD.

(*1*) New or amended Rules 201, 205, 405, and 406, adopted on November 13, 1984.

(C) Shasta County APCD.

(*1*) Amended Rule 2:1.514, adopted on May 29, 1984.

(D) San Diego County APCD.

(*1*) New Rule 67.10 adopted January 30, 1985.

(E) South Coast AQMD.

(*1*) Amended Rule 1108 adopted February 1, 1985.

(161) Revisions to the ozone and carbon monoxide nonattainment area plans for the Fresno County portion of the San Joaquin Valley Air Basin were submitted by the Governor on June 11, 1984.

(i) Incorporation by reference.

(A) State of California Air Resources Board Executive Order G–125–46 adopted May 11, 1984.

(B) Letters from the County of Fresno to the Bureau of Automotive Repair dated March 14, 1984 and February 14, 1984 requesting implementation of an I/M program in Fresno County.

(C) County of Fresno Resolution File Number 18–13 adopted February 14, 1984.

(D) Schedule to implement I/M in Fresno County, adopted on February 14, 1984.

(ii) Additional Information. The State submitted no additional information.

(162) Revised regulations for the following APCD were submitted on June 21, 1985 by the Governor's designee.

(i) Northern Sonoma County APCD.

(A) Amended Rule 220 (a).

(163) Rule 1304(e), Resource Conservation and Energy Projects, adopted on March 7, 1980, submitted on April 3, 1980 (See § 52.220(c)(68)(i)), and conditionally approved on January 21, 1981 [See § 52.232(a)(3)(i)(A)] is disapproved but only with respect to projects whose application for a permit is complete after January 1, 1986.

(164) Revised regulations for the following APCD's were submitted on October 16, 1985 by the Governor's designee.

(i) Incorporation by reference.

(A) Amador County APCD.

(*1*) New or amended Rules 301–319 and 501, adopted 6/16/81; and Rules 502–514 and 517–521, adopted 1/8/80.

(*2*) Previously approved on April 17, 1987 in paragraph (c)(164)(i)(A)(*1*) of this section and now deleted without replacement, Rules 318, 319, and 509.

(B) Northern Sonoma County APCD.

(*1*) Amended Rules 100, 120, 130 (d1 and s5), 500, 520, 600, and 610, adopted 2/22/84, and amended Rule 200(a), adopted 7/19/83.

(*2*) Appendices A and B adopted on February 22, 1984.

(*3*) Previously approved on April 17, 1987 in paragraph (c)(164)(i)(B)(*1*) of this section and now deleted without replacement, Rules 500 and 520.

(C) Ventura County APCD.

(*1*) Amended Rules 15, 54, 61, 64, 67, 69, 70, 74.3, 74.4, 74.5, 74.6, 74.8, 80, and 103, revised 7/5/83.

(*2*) Previously approved and now removed (without replacement), Rule 84.

(*3*) Previously approved on April 17, 1987 and now deleted without replacement Rule 61.

(*4*) Rule 74.11 adopted on April 9, 1985.

(D) Yuba County APCD.

(*1*) Amended Rules 1.1, 2.0, 2.1, 2.3, 2.5, 2.6, 2.7, 2.9, 2.11, and 2.16, adopted 3/5/85.

(E) South Coast Air Quality Management District.

(*1*) Rule 1150.1, adopted on April 5, 1985.

(165) Revised regulations for the following APCD's were submitted by the Governor's designee on November 12, 1985.

(i) Incorporation by reference.

(A) Northern Sonoma County APCD.

(*1*) Amended Rule 130 s4, adopted 7/9/85.

(B) South Coast Air Quality Management District.

(*1*) Amended Rule 221, adopted 1/4/85.

(166) A revised regulation for the following district was submitted on December 2, 1983, by the Governor's designee.

(i) Incorporation by reference.

(A) South Coast AQMD.

(1) Amended Rule 466 adopted 10/7/83.

(167) A revised regulation for the following district was submitted on August 1, 1984, by the Governor's designee.

(i) Incorporation by reference.

(A) Ventura County APCD.

(1) Amended Rule 74.7 adopted 7–3–84.

(168) Revised regulations for the following APCD's were submitted by the Governor's designee on February 10, 1986.

(i) Incorporation by reference.

(A) Butte County APCD.

(*1*) New or amended Rules 101, 102, 250, 260, 261, 270, 301, 302, 303, 304, 306, 307, 308, 309, 310, 311, 312, 313, 314, 315, 316, 317, 318, 320, 322, 323, 324, 325, 401, 402, 403, 405, 406, 407, 420, 421, 422, 423, 425, 601, 602, 603, 604, 605, 606, 607, 608, 609, 610, 611, 612, 613, 614, 615, 616, 617, 618, 619, 620, 621, 701, 702, 703, 704, 801, 802, 901, 902, and 3–3 (repealed), adopted August 6, 1985.

(*2*) New or amended Rules 202, 203, 204, 205, 210, 211, 212, 213, 214, 215, 220, 225, and 231 adopted August 6, 1985.

(*3*) Previously approved on February 3, 1987 and now deleted without replacement Rules 601 to 618, 620 to 621, and 801 to 802.

(*4*) Rule 424, adopted on August 6, 1985.

(*5*) Previously approved on February 3, 1987 in paragraph (c)(168)(i)(A)(*1*) of this section and now deleted without replacement, Rules 701, 702, 703, and 902.

(B) Lake County APCD.

(*1*) New Rules 650D, 651, and 1701Q, adopted December 10, 1985.

(C) Placer County APCD (Mountain Counties portion).

(*1*) Amended Rules 102, 312, 314, 315, 320, 505, 507, 803, 211A (repealed), and 219M (repealed), adopted May 20, 1985.

(*2*) New or amended Rules 213, 307, and 324 adopted May 20, 1985.

(*3*) Previously approved on February 3, 1987 in paragraph (c)(168)(i)(C)(*1*) of this section and now deleted without replacement, Rule 803.

(D) Sutter County APCD.

(*1*) Amended Rule 2.5, adopted October 15, 1985.

(E) Tehama County APCD.

(*1*) Amended Rules 2.12, 2.13, 2.14, 2.15, 2.16, 2.17, 5.2, 5.3, 5.6, 5.7, 5.8, 5.9, 5.10, 5.11, 5.12, 5.13, 5.15, 5.16, 5.17, 5.18, 5.20, 5.21, 5.22, and 5.23, adopted September 19, 1985.

(*2*) New or amended Rules 4.3, 4.8, 4.9 (a) and (b), 4.10, and 4.14 adopted September 10, 1985.

(*3*) Previously approved on February 3, 1987 and now deleted without replacement Rules 5.2 to 5.3, 5.6 to 5.9, 5.11 to 5.12, 5.13, 5.15 to 5.18, and 5.20 to 5.23.

(F) Monterey Bay Unified APCD.

(*1*) New or amended Rules 416 and 418 adopted September 18, 1985.

(*2*) Rule 204, amended on July 17, 1985.

(G) San Diego County APCD.

(*1*) New or amended Rules 66 (w) and 67.8 (d) adopted September 17, 1985.

(H) South Coast AQMD.

(*1*) Amended Rule 1159 adopted December 6, 1985.

(*2*) Rule 1150.2, adopted on October 18, 1985.

(*3*) Previously approved on July 12, 1990 in paragraph (i)(H)(*1*) of this section and now deleted without replacement for implementation in the Antelope Valley Air Pollution Control District Rule 1159.

(169) New and amended regulations submitted on June 4, 1986 by the Governor's designee.

(i) Incorporation by reference.

(A) South Coast Air Quality Management District.

(*1*) Rules 404 and 405 adopted on May 7, 1976 and amended on February 7, 1986. Rule 1112.1 adopted on February 7, 1986.

(170) Revised regulations for the following APCD's were submitted on August 12, 1986, by the Governor's designee.

(i) Incorporation by reference.

(A) Placer County Air Pollution Control District.

(*1*) Amended rules 101, 201, 305 (Mountain Counties portion), adopted May 27, 1986.

(171) Revised regulations for the following APCD's were submitted on November 21, 1986 by the Governor's designee.

(i) Incorporation by reference.

(A) Mendocino County APCD.

(*1*) Amended Rule 200(d), adopted on July 8, 1986.

(B) Placer County APCD.

(*1*) New Rule 225, adopted on June 17, 1986.

(C) San Joaquin County APCD.

(*1*) Amended Rules 411.2, 416, and 416.1, adopted on June 24, 1986.

(D) Shasta County APCD.

(*1*) New or amended Rules 1:1, 1:2 (except "fugitive emissions"), 2:10, 2:23, 2:26, 2:27, 3:2, 3:3, 4:1, 4:2, and 4:7 adopted on July 22, 1986.

(*2*) Previously submitted to EPA on June 30, 1972 and approved in the FEDERAL REGISTER on September 22, 1972 and now removed without replacement, Rule 2:13.

(*3*) Previously submitted to EPA on July 19, 1974 and approved in the FEDERAL REGISTER on August 22, 1977 and now removed without replacement, Rules 3:8, 4:7, 4:9, 4:10, 4:11, 4:12, 4:13, 4:15, 4:16, 4:17, 4:18, 4:20, 4:21, and 4:22.

(*4*) Previously submitted to EPA on October 13, 1977 and approved in the FEDERAL REGISTER on November 14, 1978 and now removed without replacement, Rules 4:14 and 4:19.

(*5*) Previously approved on April 12, 1989 and now deleted without replacement Rule 4.1.

(172) Revised regulations for the following APCD's were submitted on March 11, 1987, by the Governor's designee.

(i) Incorporation by reference.

(A) Siskiyou County APCD.

(*1*) New or amended Rules 1.1, 1.2 (A3, A4, A8, A9, B3, B4, C1, C5, C6, C8, C10, D1, D2, E1, F1, H2, I2, I3, M3, M4, O1, P1, P3, P4, P8, R3, R4, R6, S1, S2, S3, S5, S6, T2, V1), 1.3, 1.5, 2.3, 2.7, 2.8, 2.9, 2.10, 2.11, and 2.12 adopted on November 25, 1986.

(*2*) Previously submitted to EPA on February 21, 1972 and approved in the FEDERAL REGISTER on May 31, 1972 and now removed without replacement, Rule 1.2 (M).

(*3*) Previously submitted to EPA on July 25, 1973 and approved in the FEDERAL REGISTER on August 22, 1977 and now removed without replacement, Rule 2.13.

(B) Ventura County APCD.

(*1*) Amended Rule 23, adopted on October 21, 1986.

(173) Revised regulations for the following APCD's were submitted on June 9, 1987 by the Governor's designee.

(i) Incorporation by reference.

(A) Bay Area AQMD.

(*1*) New Rules 2–1–401.6 and 2–1–401.7, adopted January 7, 1987.

(B) Imperial County APCD.

(*1*) New or amended Rules 102, 105, 108, 110, 113, 115, 203, 204, 205, 210, 401, 402, 403, 420, 421, 422, and 423, adopted November 19, 1985.

(*2*) Previously approved on February 3, 1989 in paragraph (c)(173)(i)(B)(*1*) of this section and now deleted without replacement, Rules 105 and 108.

(C) Monterey Bay Unified APCD.

(*1*) Amended Rule 201 (introductory paragraph and subparagraphs (1) through (8.6)), adopted December 17, 1986.

(*2*) Rule 200, amended on December 17, 1986.

(D) Tulare County APCD.

(*1*) Amended Rules 110 and 202 (introductory paragraph and subparagraphs (a) through (d.7)), adopted May 13, 1986.

(*2*) Previously approved on February 3, 1989 in paragraph (c)(173)(i)(D)(*1*) of this section and now deleted without replacement, Rule 110.

(E) San Diego County Air Pollution Control District.

(*1*) Amended Rules 61.7 and 61.8, adopted on January 13, 1987.

(F) South Coast Air Quality Management District.

(*1*) Rule 443.1, adopted on December 5, 1986.

(174) Revised regulations for the following APCD's were submitted on September 1, 1987 by the Governor's designee.

(i) Incorporation by reference.

(A) South Coast AQMD.

(*1*) Amended Rule 212, adopted May 1, 1987.

(B) Ventura County APCD.

(*1*) Amended Rule 12, adopted June 16, 1987.

(175) Revised regulations for the following APCD's were submitted on November 25, 1987, by the Governor's designee.

(i) Incorporation by Reference.

(A) Shasta County AQMD.

(*1*) Amended rules 1:2, 2:6.a.4.(c), 2:6.b, 2:7.a, 2:7.c, 2:8.c.2.(a), 2:8.c.3.(a), 2:8.c.4, and 2:19, adopted on July 28, 1987.

(B) Tehama County APCD.

(*1*) New or amended rules 1:2, 3:1, 3:6(1), 3:11(a), 3:12, 3:13.j, 3:14(10), 3:15, 4:3, and 4:24, adopted on August 4, 1987.

(*2*) Rule 4.22, adopted on August 4, 1987.

(C) Yolo-Solano APCD.

(*1*) Amended rule 3:7(d), adopted on August 12, 1987.

(176) Revised regulations for the following APCD's were submitted on March 23, 1988 by the Governor's designee.

(i) Incorporation by reference.

(A) Siskiyou County Air Pollution Control District.

(*1*) New and amended rules 4.1, 4.1–1, 4.1–2, 4.2–1, 4.3, 4.4, 4.5, 4.6, 4.6–1, 4.7, 4.8, 4.9, 4.10, 4.11, 7.1, 7.2, 7.3, 7.4, 7.5–1, 7.5–2, 7.5–3, 7.6, and 7.7 adopted on October 27, 1987.

(B) Lake County Air Pollution Control District.

(*1*) Amended rules 431.5, 431.7, 432, 432.5, 433, 434, 436.5, 442, 1105, and 1107 adopted October 20, 1987.

(*2*) Previously approved on October 23, 1989 in paragraph (c)(176)(i)(B)(*1*) of this section and now deleted Section 442 (now replaced by Section 436).

(C) Lassen County Air Pollution Control District.

(*1*) Amended Articles I, II, III, IV, V, VI, and VII adopted August 11, 1987.

(D) Monterey Bay Unified Air Pollution Control District.

(*1*) Rule 429 adopted on September 16, 1987.

(E) South Coast Air Quality Management District.

(*1*) Rule 444, adopted on October 2, 1987.

(177) Revised regulations for the following APCD's were submitted by the Governor's designee on February 7, 1989.

(i) Incorporation by reference.

(A) Ventura County Air Pollution Control District.

(*1*) Amended Rules 2 and 55 adopted May 24, 1988.

(*2*) Amended Rule 56 adopted May 24, 1988.

(B) Bay Area Air Quality Management District.

(*1*) Amended Regulation 4 adopted September 7, 1988.

(C) Mariposa County Air Pollution Control District.

(*1*) Amended Regulation III and Rules 300, 301, 302, 303, 304, 305, 306, 307, and 308 adopted July 19, 1988.

(D) Madera County Air Pollution Control District.

(*1*) Amended rules 106, 112, 114, 401, 403, 422, 424, 425, 501, 504, 505, 506, 518, 519, 601, 603, 605, 606, 609, 610, 611, 613, and 614 adoped on January 5, 1988.

(*2*) Previously approved on April 16, 1991 and now deleted without replacement Rules 106, 501, 504 to 506, and 519.

(*3*) Previously approved on April 16, 1991 in paragraph (c)(177)(i)(D)(*1*) of this section and now deleted without replacement, Rule 112.

(E) Bay Area Air Quality Management District.

(*1*) Rule 8–5 adopted on May 4, 1988.

(F) Lake County Air Quality Management District.

(*1*) Rules 248.5 and 270, adopted on December 6, 1988.

(*2*) Section (Rule) 1150, adopted on December 6, 1988.

(178) [Reserved]

(179) Revised regulations for the following APCD's were submitted on March 26, 1990, by the Governor's designee.

(i) Incorporation by reference.

(A) Kings County Air Pollution Control District.

(*1*) Amended Rules 417 and 417.1 adopted on February 28, 1989.

(B) San Bernardino County Air Pollution District.

(*1*) Amended Rules 101, 102 (except fugitive liquid leak and fugitive vapor leak), 103, 104, 105, and 106 adopted on December 19, 1988.

(*2*) Previously approved on November 27, 1990 in paragraph (c)(179)(i)(B)(*1*) of this section and now deleted without replacement, Rule 105.

(C) Bay Area Air Quality Management District.

(*1*) Rule 8–44, adopted January 4, 1989.

(D) Ventura County Air Pollution Control District.

(*1*) Rule 74.7, adopted on January 10, 1989.

(*2*) Rule 30 adopted on May 30, 1989.

(E) Siskiyou County Air Pollution Control District.

(*1*) Rules 1.2 (except section V1), 1.4, 2.1, 2.2, 2.10. 4.1, 4.6, 6.1, and Appendix A, adopted on January 24, 1989.

(*2*) Rule 4.10 adopted on January 24, 1989.

(*3*) Rule 4.3, adopted on January 24, 1989.

(*4*) Previously approved on November 4, 1996 in paragraph (c)(179)(i)(E)(*1*) of this section and now deleted without replacement, Rule 1.4.

(F) Lake County Air Quality Management District.

(*1*) Rule 1010, adopted on June 13, 1989.

(*2*) Section (Rule) 431.5, adopted on June 13, 1989.

(G) Tuolumne County Air Pollution Control District.

(*1*) Rules 101, 102, and Rule 300, adopted November 22, 1988.

(*2*) Rules 302 to 310, adopted on November 22, 1988.

(180) [Reserved]

(181) New and amended regulations for the following APCD were submitted on October 16, 1990, by the Governor's designee.

(i) Incorporation by reference.

(A) Ventura County Air Pollution Control District.

(*1*) Rule 71.2, adopted on September 26, 1989.

(182) New and amended regulations for the following APCDs were submitted on December 31, 1990, by the Governor's designee.

(i) Incorporation by reference.

(A) South Coast Air Quality Management District.

(*1*) Rules 1175 and 1176, adopted on January 5, 1990.

(*2*) Rule 109, adopted on May 5, 1989.

(*3*) Rule 108, adopted on April 6, 1990.

(*4*) Rule 461, adopted on July 7, 1989.

(*5*) Rule 431.2, amended on May 4, 1990.

(B) Bay Area Air Quality Management District.

(*1*) Regulation 8, Rule 8, adopted on November 1, 1989.

(*2*) Amended Rule 8-28, adopted September 6, 1989.

(*3*) Rule 8–46, adopted July 12, 1989.

(*4*) Amended Regulation 8, Rule 16, adopted on August 2, 1989.

(*5*) Amended Regulation 8, Rule 11, adopted on September 20, 1989.

(*6*) Regulation 2, Rule 1 adopted on November 1, 1989.

(C) San Luis Obispo County Air Pollution Control District.

(*1*) Rule 424, adopted on July 18, 1989.

(D) Santa Barbara County Air Pollution Control District.

(*1*) Amended Rule 323, adopted on February 20, 1990.

(E) San Diego County Air Pollution Control District.

(*1*) Amended Rules 101, 102, 103, and 108, adopted March 27, 1990.

(*2*) Previously approved on March 11, 1988 in paragraph (c)(182)(i)(E)(*1*) of this section and now deleted Rules 101, 102, 103, and 108 (now replaced by Rule 101).

(F) Modoc County Air Pollution Control District.

(*1*) Rules 4.1–2, 4.6, 4.6–1, and 4.9 adopted on January 3, 1989.

(*2*) Rule 4.11, adopted on January 3, 1989.

(*3*) Rule 1.2 and Rule 7.1, adopted May 1, 1989.

(*4*) Rule 4.1, adopted on January 15, 1989.

(G) Siskiyou County Air Pollution Control District.

(*1*) Rule 4.14, adopted on July 11, 1989.

(*2*) Rule 7.1, adopted July 11, 1989.

(183) New and amended regulations for the following APCD's were submitted on April 5, 1991, by the Governor's designee.

(i) Incorporation by reference.

(A) San Diego County Air Pollution Control District.

(*1*) Rule 67.8, adopted on December 18, 1990.

(*2*) Rule 61.9, adopted on March 14, 1989, is now removed without replacement as of April 19, 1994.

(*3*) Revised Rule 67.3, adopted on October 16, 1990.

(*4*) Amended Rule 61.4, adopted on October 16, 1990.

(*5*) Amended Rule 67.4, adopted July 3, 1990.

(*6*) Amended Rule 61.0, adopted on September 16, 1990.

(*7*) New Rule 67.12, adopted December 4, 1990.

(*8*) Previously approved on March 24, 1992 and now deleted without replacement Rule 67.8.

(*9*) Amended Rule 67.18, adopted on July 3, 1990.

(*10*) Revised Rules 61.2, 61.3, and 67.5, adopted October 16, 1990.

(*11*) Amended Rule 61.1, adopted October 16, 1990.

(*12*) Rule 67.6, adopted on October 16, 1990.

(*13*) Rule 67.15, adopted on December 18, 1990.

(B) Ventura County Air Pollution Control District.

(*1*) Rules 74.5.1 and 74.5.2, adopted on December 4, 1990.

(*2*) Rule 71, adopted on September 11, 1990.

(*3*) Rule 74.13, adopted on January 22, 1991.

(*4*) Rule 74.16, adopted January 8, 1991.

(C) Placer County Air Pollution Control District.

(*1*) Amended Rule 217, adopted on September 25, 1990.

(*2*) Amended Rule 213, adopted on September 25, 1990.

(*3*) New Rule 410 and Amended Rule 223, adopted on September 25, 1990.

(*4*) Amended Rule 212, adopted September 25, 1990.

(*5*) Rule 216, adopted on September 25, 1990.

(D) Sacramento Metropolitan Air Quality Management District.

(*1*) Amended rules 443, adopted September 25, 1990, and 452, adopted August 21, 1990.

(E)(*1*) [Reserved]

(*2*) Rule 316, adopted on July 10, 1990.

(F) Bay Area Air Quality Management District.

(*1*) Amended Regulation 8, Rule 43, adopted on June 20, 1990.

(*2*) Regulation 8, Rule 17, adopted on September 5, 1990.

(G) [Reserved]

(H) El Dorado County Air Pollution Control District.

(*1*) Regulation IX, Rules 900 through 914, adopted September 18, 1990.

(*2*) Previously approved on October 1, 1999 in paragraph (c)(183)(i)(H)(*1*) of this section and now deleted Rules 900, 901, 902, 903, and 904 (now replaced by Rule 238).

(*3*) Previously approved on October 1, 1999 in paragraph (c)(183)(i)(H)(*1*) of this section and now deleted Rules 905, 906, 907, 908, 910, 911, and 912 (now replaced by Rule 244).

(*4*) Previously approved on October 1, 1999 in paragraph (c)(183)(i)(H)(*1*) of this section and now deleted Rule 909 (now replaced by a Negative Declaration adopted on April 3, 2001).

(*5*) Previously approved on October 1, 1999 in paragraph (c)(183)(i)(H)(*1*) of this section and now deleted without replacement Rule 913.

(*6*) Previously approved on October 1, 1999 in paragraph (c)(183)(i)(H)(*1*) of this section and now deleted Rule 914 (now replaced by Rule 501).

(184) New and amended regulations for the following APCDs were submitted on May 13, 1991, by the Governor's designee.

(i) Incorporation by reference.

(A) Sacramento Metropolitan Air Quality Management District.

(*1*) Amended rule 445, adopted November 6, 1990.

(*2*) Amended Rules 442, adopted October 2, 1990, and 446, adopted December 4, 1990.

(*3*) Previously approved on August 20, 1991 and now deleted without replacement Rule 445.

(B) South Coast Air Quality Management District.

(*1*) Rules 1102 and 1102.1, adopted on December 7, 1990.

(*2*) Rule 465, adopted on December 7, 1990, and Rule 1123, adopted on December 7, 1990.

(*3*) Rules 1153 and 1164, adopted on January 4, 1991, and December 7, 1990, respectively.

(*4*) New Rule 1174, adopted on October 5, 1990.

(*5*) Rule 1103, adopted on December 7, 1990.

(*6*) Rule 464, adopted on December 7, 1990.

(*7*) Rules 201, 203, 205, 209, 214 to 217 amended on January 5, 1990 and Rule 201.1 adopted on January 5, 1990.

(*8*) Rule 208, adopted on January 5, 1990.

(*9*) Previously approved on August 11, 1992 and now deleted without replacement for implementation in the Antelope Valley Air Pollution Control District Rule 1123.

(*10*) Rules 1162 and 1173, adopted on December 7, 1990.

(C) Bay Area Air Quality Management District.

(*1*) Rule 8-37, adopted on October 17, 1990.

(*2*) Regulation 6, adopted on December 19, 1990.

(D) San Diego County Air Pollution Control District.

(E) Yolo-Solano Air Quality Management District.

(*1*) Rule 2.24, adopted on November 14, 1990.

(F) Tehama County Air Pollution Control District.

(*1*) Rule 1.2, adopted April 25, 1989.

(*2*) Rule 3.12, adopted on April 25, 1989.

(185) New and amended regulations for the following APCD's were submitted on May 30, 1991, by the Governor's designee.

(i) Incorporation by reference.

(A) Kern County Air Pollution Control District.

(*1*) Rules 410.6 and 410.6A, adopted on May 6, 1991.

(*2*) Rule 410.5, adopted on May 6, 1991.

(*3*) Rule 410.4A, adopted on May 6, 1991.

(*4*) Amended Rule 410.1, adopted on May 6, 1991.

(*5*) Amended Rules 414 and 414.1 and New Rule 414.5, adopted on May 6, 1991.

(*6*) Revised Rule 410.4, adopted on May 6, 1991.

(*7*) Rule 410.3 and Rule 412, adopted on May 6, 1991.

(*8*) [Reserved]

(*9*) Rule 410.7, adopted May 6, 1991.

(B) San Diego County Air Pollution Control District.

(*1*) Rule 67.2, adopted on May 21, 1991.

(*2*) Rule 67.7, adopted on May 21, 1991.

(*3*) [Reserved]

(*4*) Amended Rule 67.16, adopted on May 21, 1991.

(*5*) Rule 67.1, adopted on May 21, 1991.

(C) San Joaquin Valley Unified Air Pollution Control District.

(*1*) Rules 467.1 and 467.2, adopted on April 11, 1991.

(*2*) Rule 460.2, adopted on April 11, 1991.

(*3*) New Rule 460.1, adopted on April 11, 1991.

(*4*) New Rules 463.4, 464.1, and 464.2, adopted on April 11, 1991.

(*5*) New Rule 461.2, adopted on April 11, 1991.

(*6*) Amended Rules 465.3 and 466.1, adopted April 11, 1991.

(*7*) Previously approved on April 24, 1992 and now deleted without replacement Rule 467.1.

(D) Placer County Air Pollution Control District.

(*1*) Amended Rule 215, adopted on September 25, 1990.

(186) New and amended regulations for the following APCDs were submitted on October 25, 1991, by the Governor's designee.

(i) Incorporation by reference.

(A) Sacramento Metropolitan Air Quality Management District.

(*1*) Amended Rules 447 adopted April 30, 1991.

(B) San Joaquin Valley Unified Air Pollution Control District.

(*1*) Rule 468.1, adopted on May 16, 1991.

(C) South Coast Air Quality Management District.

(*1*) Rule 1104, adopted March 1, 1991.

(D) Ventura County Air Pollution Control District.

(*1*) Rule 62.6, adopted on July 16, 1991.

(*2*) Rule 103, adopted on June 4, 1991.

(E) Santa Barbara County Air Pollution Control District.

(*1*) Rule 105 adopted on July 30, 1991.

(F) Northern Sierra Air Pollution Control District.

(*1*) Rules 302 to 312, adopted on November 10, 1988.

(187) New and amended regulations for the following APCDs were submitted on January 28, 1992, by the Governor's designee.

(i) Incorporation by reference.

(A) San Joaquin Valley Unified Air Pollution Control District.

(*1*) Rule 463.1, adopted on September 19, 1991.

(*2*) Rule 460.2 adopted on September 19, 1991.

(*3*) New Rule 463.2, adopted on September 19, 1991.

(*4*) New Rule 460.4, adopted on September 19, 1991.

(*5*) Rule 461.1 and Rule 465.2, adopted on September 19, 1991.

(*6*) Rule 465.1, adopted on September 19, 1991.

(B) Ventura County Air Pollution Control District.

(*1*) New Rule 74.17, adopted on September 17, 1991.

(*2*) Rule 74.1, adopted on November 12, 1991.

(*3*) New rules 150 to 159 amended on September 17, 1991.

(*4*) Rules 26.A ("General"), 26.8 and 26.9 adopted on October 22, 1991.

(C) South Coast Air Quality Management District.

(*1*) Rule 1142, adopted on June 19, 1991.

(*2*) Rule 1135, adopted on July 19, 1991.

(*3*) Previously approved on December 13, 1994 and now deleted without replacement for implementation in the Antelope Valley Air Pollution Control District Rule 1142.

(D) San Diego County Air Pollution Control District.

(*1*) New rules 127, 128, and 130 amended on September 17, 1991.

(188) New and amended regulations for the following APCDs were submitted on June 19, 1992, by the Governor's designee.

(i) Incorporation by reference.

(A) Santa Barbara County Air Pollution Control District.

(*1*) Rule 339, adopted on November 5, 1991.

(*2*) Rule 331, adopted on December 10, 1991.

(*3*) Rule 342, adopted on March 10, 1992.

(*4*) Rule 329, adopted on February 25, 1992.

(B) San Bernardino County Air Pollution Control District.

(*1*) Rule 1116, adopted on March 2, 1992.

(C) South Coast Air Quality Management District.

(*1*) Rule 1171, adopted on August 2, 1991.

(*2*) Rule 465, amended on November 1, 1991.

(D) Ventura County Air Pollution Control District.

(*1*) Rule 74.18, adopted on January 28, 1992.

(*2*) Rule 74.6, adopted on December 10, 1991.

(*3*) Rule 74.3, adopted on December 10, 1991.

(*4*) Rule 29 adopted on October 22, 1991.

(E) [Reserved]

(F) Sacramento Metropolitan Air Quality Management District.

(*1*) Rules 448 and 449 adopted on December 17, 1991.

(189) New and amended regulations for the following APCDs were submitted on September 14, 1992, by the Governor's designee.

(i) Incorporation by reference.

(A) South Coast Air Quality Management District.

(*1*) Rule 1115, adopted on March 6, 1992.

(*2*) Rule 1126, adopted on March 6, 1992.

(*3*) Rule 1128, adopted on February 7, 1992, and Rule 1141, adopted on April 3, 1992.

(*4*) Rules 1125 and 1136, adopted on August 2, 1991.

(*5*) New Rule 1179, adopted March 6, 1992.

(*6*) Rule 109 adopted on March 6, 1992, and Rule 1106.1 adopted on May 1, 1992.

(*7*) Rule 1141.1, adopted on November 4, 1983 and amended on March 6, 1992.

(B) Ventura County Air Pollution Control District.

(*1*) Rule 71.1 and Rule 71.3, adopted on June 16, 1992.

(*2*) Rule 74.10, adopted on June 16, 1992.

(*3*) Rule 74.14, adopted on May 26, 1992.

(C) Bay Area Air Quality Management District.

(*1*) Rule 8–49, adopted on August 21, 1992.

(*2*) Regulation 9 Rule 1, amended on May 20, 1992.

(190) New and amended regulations for the following APCDs were submitted on November 12, 1992, by the Governor's designee.

(i) Incorporation by reference.

(A) Ventura County Air Pollution Control District.

(*1*) Revised Rule 74.19, adopted August 11, 1992.

(*2*) Rule 74.2 revised on August 11, 1992.

(*3*) Rule 24 adopted on September 15, 1992.

(B) Bay Area Air Quality Management District.

(*1*) Rule 8–18, adopted on March 4, 1992.

(191) New and amended regulations for the following APCDs were submitted on January 11, 1993, by the Governor's designee.

(i) Incorporation by reference.

(A) South Coast Air Quality Management District.

(*1*) Rule 1145, adopted on January 10, 1992.

(B) Santa Barbara County Air Pollution Control District.

(*1*) Rule 346, adopted on October 13, 1992.

(C) San Bernardino County Air Pollution Control District.

(*1*) Rule 463, adopted on November 2, 1992.

(D) Kern Couny Air Pollution Control District.

(*1*) Rule 412.1, adopted on November 9, 1992.

(192) New and amended regulations for the following APCDs were submitted on April 6, 1993, by the Governor's designee.

(i) Incorporation by reference.

(A) Sacramento Air Quality Management District.

(*1*) Rule 456, adopted on February 23, 1993.

(*2*) Rule 454, adopted on February 23, 1993.

(*3*) Revised Rule 450, adopted February 23, 1993.

(193) New and amended regulations for the following APCDs were submitted on May 13, 1993, by the Governor's designee.

(i) Incorporation by reference.

(A) South Coast Air Quality Management District.

(*1*) Rule 1106, adopted on August 2, 1991; Rule 1107, adopted on August 2, 1991; and Rule 1151, adopted on September 6, 1991.

(*2*) Rule 1130 adopted on March 6, 1992.

(*3*) Rule 1122, adopted on April 5, 1991.

(B) San Luis Obispo County Air Pollution Control District.

(*1*) Rule 417, adopted February 9, 1993.

(C) Butte County Air Pollution Control District.

(*1*) Rule 241, adopted on January 12, 1993.

(D) Glenn County Air Pollution Control District.

(*1*) Section 51, adopted on March 16, 1993.

(E) Ventura County Air Pollution Control District

(1) Rule 26.7 adopted on December 22, 1992.

(194) New and amended regulations for the following APCDs were submitted on November 18, 1993, by the Governor's designee.

(i) Incorporation by reference.

(A) Ventura County Air Pollution Control District.

(*1*) Rule 70, adopted on May 4, 1993; Rule 71, adopted on June 8, 1993; and Rule 71.4, adopted on June 8, 1993.

(*2*) Rule 59, adopted on September 15, 1992.

(*3*) Rule 74.15.1, adopted on May 11, 1993.

(*4*) Rule 74.21, adopted on April 6, 1993.

(*5*) Rule 74.20, adopted on June 8, 1993.

(B) Kern County Air Pollution Control District.

(*1*) Rule 410.4, adopted on July 12, 1993.

(*2*) Rule 425, adopted on August 16, 1993.

(*3*) Previously submitted to EPA on June 28, 1982 and approved in the FEDERAL REGISTER on May 3, 1984 and now removed without replacement, Rule 425.

(*4*) Rule 424 adopted on April 19, 1993.

(C) San Joaquin Valley Unified Air Pollution Control District.

(*1*) Rule 4603, adopted on May 20, 1993.

(*2*) Rule 4621, adopted on May 20, 1993.

(*3*) Rule 4802, adopted on May 21, 1992, and amended on December 17, 1992.

(*4*) Rules 2031, 2070, 2080, and 2092 adopted on May 21, 1992 and amended on December 17, 1992.

(*5*) Rule 4201, adopted on December 17, 1992.

(D) Santa Barbara County Air Pollution Control District.

(*1*) Rule 349, adopted on April 27, 1993.

(E) San Diego County Air Pollution Control District.

(*1*) Rule 67.12, adopted on April 6, 1993.

(*2*) Amended Rule 19, adopted April 6, 1993.

(F) Monterey Bay Unified Air Pollution Control District

(*1*) Rule 417, Rule 418, and Rule 427, adopted on August 25, 1993.

(*2*) Rule 425, adopted on August 25, 1993.

(*3*) Rule 420 and Rule 426, adopted on August 25, 1993.

(*4*) Previously submitted to EPA on February 6, 1975 and approved in the FEDERAL REGISTER on July 13, 1987 and now removed without replacement, Rule 428.

(*5*) Rule 300—Regulation 3, Part 4, Paragraph 4.4 adopted on June 9, 1993.

(G) Mendocino County Air Quality Management District.

(*1*) Rule 130 (p6), (t2), and (t3) adopted April 6, 1993.

(*2*) Rule 400(b) adopted on April 6, 1993.

(H) South Coast Air Quality Management District.

(*1*) Rule 403.1, adopted on January 15, 1993.

(195) New and amended regulations for the following APCDs were submitted on February 11, 1994, by the Governor's designee.

(i) Incorporation by reference.

(A) San Diego Air Pollution Control District.

(*1*) Rule 67.17, adopted on September 21, 1993.

(B) Ventura County Air Pollution Control District.

(*1*) Rule 74.22, adopted on November 9, 1993.

(*2*) Rule 59, adopted on October 12, 1993.

(196) New and amended regulations for the following APCDs were submitted on March 29, 1994 by the Governor's designee.

(i) Incorporation by reference.

(A) Sacramento Metropolitan Air Quality Management District.

(*1*) Sacramento Metropolitan AQMD rules 442, 443, 446, 447, and 452 adopted on November 16, 1993.

(B) Ventura County Air Pollution Control District.

(*1*) Rule 74.9, adopted on December 21, 1993.

(*2*) Rule 15.1 adopted on October 12, 1993.

(C) Santa Barbara County Air Pollution Control District.

(*1*) Rule 316, adopted on December 14, 1993.

(*2*) Rules 325 & 326, adopted on January 25, 1994 and December 14, 1993, respectively.

(*3*) Rule 343, adopted on December 14, 1993.

(D) Yolo-Solano Air Quality Management District.

(*1*) Rule 3.2, adopted on August 25, 1993; and rules 3.14 and 3.15, adopted on September 22, 1993.

(E) Monterey Bay Unified Air Pollution Control District.

(*1*) Rule 213, amended on February 16, 1994.

(F) [Reserved]

(*4*) Rule 401, adopted on April 18, 1972 and amended on November 29, 1993.

(197) New and amended regulations for the following APCDs were submitted on May 24, 1994, by the Governor's designee.

(i) Incorporation by reference.

(A) South Coast Air Quality Management District.

(*1*) Rules 1162, 1173, 1175 and 1176, adopted on May 13, 1994.

(*2*) Rule 463, adopted on March 11, 1994.

(B) Bay Area Air Quality Management District.

(*1*) Rule 8–6, adopted on February 2, 1994. Rule 8–5, adopted on January 20, 1993.

(C) San Joaquin Valley Unified Air Pollution Control District.

(*1*) Rule 4622, adopted on February 17, 1994.

(*2*) Rule 4681, adopted on December 16, 1993.

(*3*) Rules 4302 and 4303, adopted on May 21, 1992 and amended on December 16, 1993.

(*4*) Rule 4103, adopted on December 16, 1993.

(*5*) Rule 1081, originally adopted on April 11, 1991 and amended on December 16, 1993.

(D) Ventura County Air Pollution Control District.

(*1*) Rule 74.24, adopted on March 8, 1994.

(*2*) Rule 56, adopted on October 22, 1968, as amended on March 29, 1994.

(E) El Dorado County Air Pollution Control District.

(*1*) Rules 501, 523, 524, and 525 adopted on April 26, 1994.

(198) New and amended regulations for the following APCDs were submitted on July 13, 1994, by the Governor's designee.

(i) Incorporation by reference.

(A) Bay Area Air Quality Management District.

(*1*) Revised Rule 8–8, adopted on June 15, 1994.

(B) Placer County Air Pollution Control District.

(*1*) Rule 230, adopted on June 28, 1994.

(*2*) Rule 229, adopted on June 28, 1994.

(C) San Joaquin Valley Unified Air Pollution Control District.

(*1*) Rule 4407, adopted on May 19, 1994.

(*2*) Rule 4682 adopted on June 16, 1994 and Rule 4684 adopted on May 19, 1994.

(*3*) Rule 4607, adopted on May 19, 1994.

(D) Sacramento Metropolitan Air Quality Management District.

(*1*) Rule 458, adopted on June 7, 1994.

(E) Mojave Desert Air Quality Management District.

(*1*) Rules 461 and 462, adopted on May 25, 1994.

(*2*) Rule 1117 adopted June 22, 1994.

(F) Monterey Bay Unified Air Pollution Control District.

(*1*) Rule 430, adopted on May 25, 1994.

(*2*) Rule 416, adopted April 20, 1994.

(G) [Reserved]

(H) South Coast Air Quality Management District.

(*1*) Rule 1146 and Rule 1146.1, adopted May 13, 1994.

(I) San Diego County Air Pollution Control District.

(*1*) Rule 67.10, adopted on June 15, 1994.

(*2*) Rule 60 adopted on May 17, 1994.

(J) Ventura County Air Pollution Control District.

(*1*) Rule 74.28, adopted on May 10, 1994.

(*2*) Rule 74.30 adopted May 17, 1994.

(*3*) Rule 64, amended June 14, 1994.

(*4*) Rule 54, amended on June 14, 1994.

(K) Santa Barbara County Air Pollution Control District.

(*1*) Rule 354, adopted June 28, 1994.

(*2*) Rule 359, adopted on June 28, 1994.

(199) New and amended regulations for the following APCDs were submitted on September 28, 1994 by the Governor's designee.

(i) Incorporation by reference.

(A) Bay Area Air Quality Management District.

(*1*) Regulation 8, Rules 11 and 16 adopted on June 15, 1994, and Regulation 8, Rule 28 adopted on June 1, 1994.

(*2*) Regulation 8, Rules 14 and 43 adopted on June 1, 1994, and regulation 8, Rules 13, 23, 47 adopted on June 15, 1994.

(*3*) Rules 8–25 and 8–42, adopted on June 1, 1994 and Rule 8–50, adopted on June 15, 1994.

(*4*) Rule 8–22, adopted on June 1, 1994.

(*5*) Rules 8–29, 8–33, and 8–39, adopted on June 1, 1994, and Rules 8–19 and 8–38, adopted on June 15, 1994.

(*6*) Rules 8–4, 8–7, 8–15, 8–31, and 8–41 adopted on June 1, 1994. Rules 8–1, 8–2, 8–12, 8–20, 8–24, 8–30, 8–34, 8–35, and 8–40 adopted on June 15, 1994. Rule 8–32 adopted on July 6, 1994.

(*7*) [Reserved]

(*8*) Regulation 2, Rule 2 and Rule 4 adopted on June 15, 1994.

(B) San Luis Obispo County Air Pollution Control District.

(*1*) Rule 419, adopted July 12, 1994.

(C) Monterey Bay Unified Air Pollution Control District.

(*1*) Rules 433 and 434, adopted June 15, 1994.

(D) San Joaquin Valley Unified Air Pollution Control District.

(*1*) Rule 4352, adopted on September 14, 1994.

(*2*) Rule 4354, adopted on September 14, 1994.

(*3*) Rules 6010, 6020, 6040, 6050, 6060, 6070, 6080, 6081, 6090, 6100, 6110, 6120, 6130, 6140, and 6150 were adopted on May 21, 1992; amended on December 17, 1992.

(*4*) Rule 4301, adopted on May 21, 1992, as amended on December 17, 1992.

(*5*) Rule 1010 adopted on June 18, 1992 and Rule 1130 adopted on June 18, 1992 and amended on December 17, 1992.

(*6*) Rules 1110, 1140, 1150, 2010, and 2040 amended on December 17, 1992.

(*7*) Rule 4202, adopted on December 17, 1992.

(*8*) Rule 1080, originally adopted on June 18, 1992 and amended on December 17, 1992.

(E) Yolo-Solano Air Quality Management District.

(*1*) Rule 2.34, adopted on July 13, 1994.

(*2*) Rule 2.32 adopted on August 10, 1994.

(200) Program elements were submitted on November 13, 1992 by the Governor's designee.

(i) Incorporation by reference.

(A) Small Business Stationary Source Technical and Environmental Compliance Assistance Program, adopted on October 15, 1992.

(201) A plan for the following agency was submitted on November 7, 1994 by the Governor's designee.

(i) Incorporation by reference.

(A) California Air Resources Board.

(*1*) California's Opt-out Program, Executive Order G–125–145, dated November 7, 1994.

(202) New and amended regulations for the following APCDs were submitted on October 19, 1994, by the Governor's designee.

(i) Incorporation by reference.

(A) Bay Area Air Quality Management District.

(*1*) Rule 2–1–249, adopted on June 15, 1994.

(B) Kern County Air Pollution Control District.

(*1*) Rule 425.3, adopted on October 13, 1994.

(*2*) Rule 425.1 adopted on October 13, 1994.

(C) San Diego County Air Pollution Control District. (*1*) Rule 67.4, adopted on September 27, 1994.

(*2*) Rule 67.16, adopted on September 20, 1994.

(*3*) Rule 69.2, adopted on September 27, 1994.

(*4*) Rule 68, adopted on September 20, 1994.

(*5*) Rule 69.4, adopted on September 27, 1994.

(*6*) Rule 69.3, adopted on September 27, 1994.

(D) Mojave Desert Air Quality Management District.

(*1*) Rule 464, adopted August 24, 1994.

(E) Placer County Air Pollution Control District.

(*1*) Rule 250, adopted on October 17, 1994.

(*2*) Rule 233, adopted on October 6, 1994.

(F) Yolo-Solano Air Quality Management District.

(*1*) Rule 3.1, adopted on February 23, 1994.

(203) New and amended regulations for the following APCDs were submitted on October 20, 1994, by the Governor's designee.

(i) Incorporation by reference.

(A) El Dorado County Air Pollution Control District.

(*1*) Rule 233 adopted on October 18, 1994.

(*2*) Rule 229 adopted on September 27, 1994.

(204) New and amended plans and regulations for the following agencies were submitted on November 15, 1994, by the Governor's designee.

(i) Incorporation by reference.

(A) California Air Resources Board.

(*1*) Title 17, California Code of Regulations, Subchapter 8.5, Consumer Products, Article 1, Antiperspirants and Deodorants, Sections 94500–94506.5 and Article 2, Consumer Products, Sections 94507–94517, adopted on December 27, 1990, August 14, 1991, and September 21, 1992.

(*2*) Title 13, California Code of Regulations, Diesel Fuel Regulations, Sections 2281–2282, adopted on August 22, 1989, June 21, 1990, April 15, 1991, October 15, 1993, and August 24, 1994.

(*3*) Title 13, California Code of Regulations, Reformulated Gasoline Regulations, Sections 2250, 2252, 2253.4, 2254, 2257, 2260, 2261, 2262.1, 2262.2, 2262.3, 2262.4, 2262.5, 2262.6, 2262.7, 2263, 2264, 2266–2272, and 2296, 2297, adopted on April 1, 1991, May 23, 1991, and September 18, 1992.

(*4*) Long Term Measures, Improved Control Technology for Light-Duty Vehicles (Measure M2), Off-Road Industrial Equipment (Diesel), Consumer Products Long-Term Program (Measure CP4), and Additional Measures (Possible Market-Incentive Measures

and Possible Operational Measures Applicable to Heavy-Duty Vehicles), as contained in "The California State Implementation Plan for Ozone, Volume II: The Air Resources Board's Mobile Source and Consumer Products Elements," adopted on November 15, 1994.

(*5*) Mid-Term Measures, Accelerated Ultra-Low Emission Vehicle (ULEV) requirement for Medium-Duty Vehicles (Measure M3), Heavy-Duty Vehicles NO_X regulations (Measure M5), Heavy-Duty Gasoline Vehicles lower emission standards (Measure M8), Industrial Equipment, Gas & LPG—3-way catalyst technology (Measure M11), Mid-Term Consumer Products (Measure CP–2), as contained in The California State Implementation Plan for Ozone, Volume II: The Air Resources Board's Mobile Source and Consumer Products Elements, adopted on Nov. 15, 1994.

(*6*) State control measures: Accelerated Retirement of LDV's (Measure M1), Early Introduction of 2g/bhp-hr Heavy Duty Diesel Vehicles (Measure M4), Accelerated Retirement of Heavy-Duty Vehicles (Measure M7), Aerosol Paints (Measure CP3), and California Department of Pesticide Regulation's Pesticide Plan, as contained in "The California State Implementation Plan for Ozone, Volume II: The Air Resources Board's Mobile Source and Consumer Products Elements," adopted on November 15, 1994, and tables of local agency control measures and revisions to local Rate-of-Progress plan elements as contained in "The California State Implementation Plan for Ozone, Volume IV: "Local Plans," adopted on November 15, 1994.

(B) South Coast Air Quality Management District.

(*1*) Long Term Measures, Advance Technology for Coating Technologies (Measure ADV–CTS–01), Advance Technology for Fugitives (Measure ADV–FUG), Advance Technologies for Process Related Emissions (Measure ADV–PRC), Advance Technologies for Unspecified Stationary Sources (Measure ADV–UNSP), and Advance Technology for Coating Technologies (Measure ADV–CTS–02), as contained in the "1994 Air Quality Management Plan," adopted on September 9, 1994.

(*2*) Control measures, emissions inventory, modeling, and ozone attainment demonstration, as contained in "1994 Air Quality Management Plan," adopted on September 9, 1994.

(C) San Diego Air Pollution Control District.

(*1*) Emissions inventory, 15% Rate-of-Progress plan, Post-1996 Rate-of-Progress plan, modeling, and ozone attainment demonstration, as contained in "1994 Ozone Attainment and Rate-of-Progress Plans for San Diego County," adopted on November 1, 1994.

(D) San Joaquin Valley Unified Air Pollution Control District.

(*1*) Control measures, emissions inventory, 15% Rate-of-Progress plan, Post-1996 Rate-of-Progress plan, modeling, and ozone attainment demonstration, as contained in "San Joaquin Valley Attainment and Rate-of-Progress Plans," adopted on November 14, 1994.

(E) Ventura County Air Pollution Control District.

(*1*) Control measures, emissions inventory, 15% Rate-of-Progress plan, Post-1996 Rate-of-Progress plan, modeling, and ozone attainment demonstration, as contained in "1994 Air Quality Management Plan for Ventura County," adopted on November 8, 1994.

(F) Mojave Desert Air Quality Management District.

(*1*) Control measures, emissions inventory, modeling, and ozone attainment demonstration, as contained in "Rate-of-Progress and Attainment Demonstration Plans for the Mojave Desert," adopted on October 26, 1994.

(205) New and amended plans for the following APCDs were submitted on December 28, 1994, by the Governor's designee.

(i) Incorporation by reference.

(A) Kern County Air Pollution Control District.

(*1*) Emissions inventory, modeling, and ozone attainment demonstration, as contained in "Rate-of-Progress and Attainment Demonstration Plans for the Kern County Air Pollution Control District," adopted on December 1, 1994.

(B) Bay Area Air Quality Management District.

(*1*) Amendments to the San Francisco Bay Area Redesignation Request and Maintenance Plan for the National Ozone Standard and 1990 Emissions Inventory adopted on September 7, 1994

by the Bay Area Air Quality Management District, October 5, 1994 by the Metropolitan Transportation Commission, and August 24, 1994 by the Association of Bay Area Governments.

(*2*) Federal General Conformity Regulation, adopted on September 7, 1994.

(206) Amended rule for the following APCD was submitted on November 23, 1994, by the Governor's designee.

(i) Incorporation by reference.

(A) San Diego County Air Pollution Control District.

(*1*) Rule 67.3, adopted on November 1, 1994.

(207) New and amended regulations for the following APCDs were submitted on November 30, 1994, by the Governor's designee.

(i) Incorporation by reference.

(A) Placer County Air Pollution Control District.

(*1*) Rule 223, adopted on October 6, 1994.

(*2*) Rules 101, 102, 103, 201, 202, 203, 204, 208, 209, 210, 211, 213, 214, 217, 219, 220, 221, 222, 225, 226, 228, 406, 407, and 408, adopted on October 19, 1993; deletion of 104 for Lake Tahoe Air Basin and Mountain Counties Air Basin submitted on 08/21/ 79 and 10/15/79, respectively.

(B) El Dorado County Air Pollution Control District.

(*1*) Rule 224, adopted on September 27, 1994.

(*2*) Rule 231, adopted September 27, 1994.

(*3*) Rule 215, adopted on September 27, 1994.

(*4*) Rules 225 and 230 adopted September 27, 1994.

(*5*) Rule 502, adopted on November 8, 1994.

(C) Yolo-Solano Air Quality Management District.

(*1*) Rule 2.21, adopted on March 23, 1994.

(*2*) Rule 2.28, adopted on May 25, 1994.

(*3*) Rules 2.25 and 2.33, adopted April 27, 1994 and September 14, 1994, respectively.

(*4*) Rule 2.13 adopted May 25, 1994.

(*5*) Rule 2.35, adopted on September 14, 1994.

(*6*) Rule 2.29, adopted on May 25, 1994.

(*7*) Rule 2.31, adopted on April 27, 1994.

(*8*) Rule 2.23 adopted on March 23, 1994.

(D) Mojave Desert Air Quality Management District.

(*1*) Rule 1102, adopted October 26, 1994.

(*2*) Rule 1104 adopted September 28, 1994.

(*3*) Rule 1157 and Rule 1160, adopted on October 26, 1994.

(E) Monterey Bay Unified Air Pollution Control District.

(*1*) Rule 419, adopted on November 23, 1994.

(*2*) Appendix G General Conformity, adopted on October 19, 1994.

(F) Great Basin Unified Air Pollution Control District.

(*1*) Regulation XIII, adopted on October 5, 1994.

(G) San Joaquin Valley Unified Air Pollution Control District.

(*1*) Rule 9110, adopted on October 20, 1994.

(H) Santa Barbara County Air Pollution Control District.

(*1*) Rule 702, adopted on October 20, 1994.

(I) South Coast Air Quality Management District.

(*1*) Rule 1901, adopted on September 9, 1994.

(208) New and amended regulations for the following APCDs were submitted on December 19, 1994, by the Governor's designee.

(i) Incorporation by reference.

(A) Placer County Air Pollution Control District.

(*1*) Rule 410, adopted on November 3, 1994.

(*2*) Rule 212, adopted on November 3, 1994.

(209) Redesignation Request and Ozone Maintenance Plan for the redesignation of the Monterey Bay Unified Air Pollution Control District submitted on July 14, 1994 and November 14, 1994, respectively, by the Governor's designee.

(i) Incorporation by reference.

(A) Maintenance Plan for the redesignation of the Monterey Bay Area adopted on October 19, 1994 by the Monterey Bay Unified Air Pollution Control District, October 12, 1994 by the Association of Monterey Bay Area Governments, and October 6, 1994 by the Council of San Benito County Governments.

(210) New and amended regulations for the following APCDs were submitted on December 22, 1994 by the Governor's designee.

(i) Incorporation by reference.

(A) Bay Area Air Quality Management District.

(*1*) Rule 8–45, adopted on November 2, 1994.

(B) San Diego County Air Pollution Control District.

(*1*) Rule 67.18, adopted on December 13, 1994.

(C) Mojave Desert Air Quality Management District.

(*1*) Rule 1103, adopted on December 21, 1994.

(*2*) Rule 471, adopted on December 21, 1994.

(D) Monterey Bay Unified Air Pollution Control District.

(*1*) Rule 1002, adopted on November 23, 1994.

(E) San Joaquin Valley Unified Air Pollution Control District.

(*1*) Rule 4651, adopted on December 17, 1992.

(F) Feather River Air Quality Management District.

(*1*) Rule 10.4, adopted on November 7, 1994.

(G) Placer County Air Pollution Control District.

(*1*) Rule 508, adopted on November 3, 1994.

(H) Sacramento Metropolitan Air Quality Management District.

(*1*) Rule 104, adopted on November 3, 1994.

(211) Revised Clean Air Plans for ozone for the following APCDs submitted on November 14, 1994, by the Governor's designee.

(i) Incorporation by reference.

(A) Santa Barbara Air Pollution Control District

(*1*) TCM–5, Improve Commuter Public Transit Service, adopted on November 2, 1994

(*2*) Emissions inventory, 15% Rate-of-Progress plan, and control measures, as contrained in "1994 Clean Air Plan for Santa Barbara County," adopted on November 2, 1994.

(212) Ozone redesignation request for the Bay Area Air Quality Management District submitted on November 5, 1993, by the Governor's designee.

(i) Incorporation by reference.

(A) Redesignation request for the San Francisco Bay Area and the Ozone Maintenance Plan for the National Ozone Standard adopted on September 1, 1993 by the Bay Area Air Quality Management District, September 22, 1993 by the Metropolitan Transportation Commission, and September 16, 1993 by the Association of Bay Area Governments.

(213) California Statewide emission inventory submitted on March 30, 1995, by the Governor's designee.

(i) Incorporation by reference.

(A) California Air Resources Board.

(*1*) 1990 Base-Year Emission Inventory for Ozone Nonattainment Areas in California.

(*i*) Sacramento, San Diego, San Joaquin Valley, South Coast, Southeast desert, Ventura.

(*ii*) Santa Barbara.

(*iii*) Monterey Bay Area.

(214) New and amended regulations for the following APCDs were submitted on January 24, 1995, by the Governor's designee.

(i) Incorporation by reference.

(A) South Coast Air Quality Management District.

(*1*) Rule 1151, adopted on December 9, 1994.

(B) San Diego County Air Pollution Control District.

(*1*) Rule 61.1 adopted on January 10, 1995.

(C) Santa Barbara County Air Pollution Control District.

(*1*) Rule 337, adopted October 20, 1994.

(*2*) Rule 344, adopted on November 10, 1994.

(D) Ventura County Air Pollution Control District.

(*1*) Rule 74.15, adopted on November 8, 1994.

(*2*) Rule 74.26 and Rule 74.27, adopted on November 8, 1994.

(E) Placer County Air Pollution Control District.

(*1*) Rule 215, adopted on November 3, 1994.

(215) New and amended regulations for the following APCDs were submitted on February 24, 1995, by the Governor's designee.

(i) Incorporation by reference.

(A) South Coast Air Quality Management District.

(*1*) Rules 1125 and 1126, adopted on January 13, 1995.

(*2*) Rule 1153 adopted on January 13, 1995.

(*3*) Rule 1106, adopted on January 13, 1995.

(*4*) Rule 1164, adopted on January 13, 1995.

(*5*) Rule 1124, adopted January 13, 1995.

(*6*) Previously approved on July 14, 1995 and now deleted without replacement for implementation in the Antelope Valley Air Pollution Control District Rule 1106.

(B) Ventura County Air Pollution Control District.

(*1*) Rule 74.12 adopted on January 10, 1995.

(*2*) Rule 71 and Rule 71.5, adopted on December 13, 1994.

(*3*) Rule 74.18 adopted December 13, 1994.

(C) San Joaquin Valley Unified Air Pollution Control District.

(*1*) Rule 4403, adopted on February 16, 1995.

(D) Yolo-Solano Air Pollution Control District.

(*1*) Rule 2.26 adopted November 9, 1994.

(*2*) Rule 2.37 adopted on November 9, 1994.

(E) Imperial County Air Pollution Control District.

(*1*) Rule 925, adopted on November 29, 1994.

(F) Monterey Bay Unified Air Pollution Control District.

(*1*) Rule 421 adopted on December 21, 1994.

(216) New and amended regulations for the following APCDs were submitted on March 31, 1995, by the Governor's designee.

(i) Incorporation by reference.

(A) Mojave Desert Air Quality Management District.

(*1*) Rule 1116, adopted on February 22, 1995.

(*2*) Rule 221, adopted December 21, 1994.

(*3*) Rule 1159, adopted on February 22, 1995.

(*4*) Rule 1114 adopted February 22, 1995.

(B) Bay Area Air Quality Management District.

(*1*) Amended Regulation 2, Rule 1, Section 129 adopted on February 1, 1995; Amended Regulation 2, Rule 6, Sections 232, 234, 310, 311, 403, 404, 420, 421, 422, 423 adopted on February 1, 1995.

(217) New and amended regulations for the following APCDs were submitted on February 28, 1994, by the Governor's designee.

(i) Incorporation by reference.

(A) Bay Area Air Quality Management District.

(*1*) Amended Regulation 2, Rule 1, Sections 102, 129, 204, 213, 214, 215, 216, 217, 218, 219, 302, 408, 411 adopted November 3, 1993; and New Regulation 2, Rule 6, Sections 206, 207, 210, 212, 213, 214, 218, 222, 230, 231, 301, 311, 401, 402, 403, 404, 420, 421, 422, 602 adopted November 3, 1993.

(B) Lake County Air Pollution Control District.

(1) New Regulation 12, section 12.200 (a4), (c2), (d1), (d2), (d3), (e3), (f1), (f2), (m1), (o1), (p1), (p2), (s3), and sections 12.800–12.850, adopted October 19, 1993.

(C) South Coast Air Quality Management District.

(*1*) Rules 204, 206, and 210 amended on October 8, 1993.

(218) New and amended regulations for the Bay Area Air Quality Management District were submitted on April 29, 1994 by the Governor's designee.

(i) Incorporation by reference.

(A) New Regulation 2, Rule 6, Sections 310 and 423 adopted November 3, 1993.

(219) New and amended regulations for the following APCDs were submitted on April 13, 1995, by the Governor's designee.

(i) Incorporation by reference.

(A) Santa Barbara County Air Pollution Control District.

(*1*) Rule 339, adopted December 15, 1994.

(220) New and amended regulations for the following APCDs were submitted on May 24, 1995, by the Governor's designee.

(i) Incorporation by reference.

(A) Santa Barbara County Air Pollution Control District.

(*1*) Rule 323, adopted March 16, 1995.

(B) Placer County Air Pollution Control District.

(*1*) Rule 218, adopted on February 9, 1995.

(*2*) Rule 236 adopted on February 9, 1995.

(*3*) Rule 244, adopted on February 9, 1995.

(C) South Coast Air Quality Management District.

(*1*) Rule 1121, adopted on March 10, 1995.

(D) San Diego County Air Pollution Control District.

(*1*) Rule 1501, adopted on March 7, 1995.

(221) New and amended regulations for the following APCDs were submitted on May 25, 1995 by the Governor's designee.

(i) Incorporation by reference.

(A) Kern County Air Pollution Control District.

(*1*) Rule 411 and Rule 413, adopted on April 6, 1995.

(*2*) Rule 410.4, adopted on April 6, 1995.

(*3*) Rule 425.2, adopted on April 6, 1995.

(B) Butte County Air Quality Management District.

(*1*) Rule 1103, adopted on February 16, 1995.

(222) New and amended regulations for the following APCDs were submitted on June 16, 1995, by the Governor's designee.

(i) Incorporation by reference.

(A) South Coast Air Quality Management District.

(*1*) Rules 1107, 1115, and 1171 adopted on May 12, 1995.

(*2*) Previously approved on July 14, 1995 and now deleted without replacement for implementation in the Antelope Valley Air Pollution Control District Rule 1115.

(B) El Dorado County Air Pollution Control District.

(*1*) Rule 234, adopted on April 25, 1995.

(C) Sacramento Metropolitan Air Quality Management District.

(*1*) Rule 411, adopted on February 2, 1995.

(*2*) Rule 413, adopted on April 6, 1995.

(*3*) Rule 412, adopted on June 1, 1995.

(D) San Diego County Air Pollution Control District.

(*1*) Rule 67.24, adopted on March 7, 1995.

(E) Butte County Air Quality Management District.

(*1*) Rule 403, adopted on November 9, 1993.

(223) Revised ozone transportation control measure (TCM) for the San Joaquin Valley submitted on March 2, 1995, by the Governor's designee.

(i) Incorporation by reference.

(A) Railroad Grade Separations TCM, adopted on September 14, 1994.

(224) New and amended regulations for the following APCDs were submitted on August 10, 1995, by the Governor's designee.

(i) Incorporation by reference.

(A) Sacramento Metropolitan Air Quality Management District.

(*1*) Rule 448 and rule 449, adopted on February 2, 1995.

(B) Ventura County Air Pollution Control District.

(*1*) Rule 70, adopted on May 9, 1995.

(*2*) Rule 220, adopted on May 9, 1995.

(*3*) Rule 74.5.2, adopted on May 5, 1995.

(C) Mojave Desert Air Quality Management District.

(*1*) Rules 1400, 1401, 1402, 1404. Adopted on June 28, 1995.

(*2*) Rule 103 amended on June 28, 1995.

(D) Monterey Bay Unified Air Pollution Control District.

(*1*) Rule 436, adopted on May 17, 1995.

(E) Santa Barbara County Air Pollution Control District.

(*1*) Amended Rule 370 adopted on June 15, 1995.

(225) New and amended regulations for the following APCDs were submitted on October 13, 1995 by the Governor's designee.

(i) Incorporation by reference.

(A) South Coast Air Quality Management District.

(*1*) Rules 1130 and 1136 adopted September 8, 1995.

(*2*) Rule 462, revised on June 9, 1995.

(*3*) Rule 1166, adopted on July 14, 1995.

(*4*) Rule 1149, adopted on December 4, 1987 and amended on July 14, 1995.

(B) Placer County Air Pollution Control District.

(*1*) Rule 238, adopted June 8, 1995.

(*2*) Rule 212, adopted on June 8, 1995.

(*3*) Rule 239, revised June 8, 1995.

(*4*) Rule 235, adopted on June 8, 1995.

(*5*) Rule 216 adopted on June 8, 1995.

(C) El Dorado County Air Pollution Control District.

(*1*) Rules 236 and 237, adopted on July 25, 1995 and June 27, 1995, respectively.

(*2*) Rule 235 adopted on June 27, 1995.

(*3*) Rule 520 adopted on June 27, 1995.

(D) San Joaquin Valley Unified Air Pollution Control District.

(*1*) Rule 4602, adopted June 15, 1995.

(E) Monterey Bay Unified Air Pollution Control District.

(*1*) Rule 431, adopted on August 16, 1995.

(F) Santa Barbara County Air Pollution Control District.

(*1*) Rule 330, adopted on April 21, 1995.

(G) Ventura County Air Pollution Control District.

(*1*) Rule 74.15.1 revised on June 13, 1995.

(*2*) Rules 10, 11, 12, 13, 14, 15 and 16 adopted on June 13, 1995.

(226) Air Quality Management Plan for the following APCD was submitted on September 11, 1991, by the Governor's designee.

(i) Incorporation by reference.

(A) Great Basin Unified Air Pollution Control District.

(*1*) Air Quality Management Plan for the Mammoth Lakes PM–10 Planning Area adopted December 12, 1990.

(227) New regulation for the following APCD was submitted on October 18, 1995, by the Governor's designee.

(i) Incorporation by reference.

(A) San Joaquin Valley Unified Air Pollution Control District.

(*1*) Rule 2530, adopted on June 15, 1995.

(228) Air Quality Management Plans for the following APCD were submitted on January 9, 1992, by the Governor's designee.

(i) Incorporation by reference.

(A) Great Basin Unified Air Pollution Control District.

(*1*) Revisions to the Air Quality Management Plan for Mammoth Lakes PM–10 Planning Area adopted November 6, 1991.

(*i*) Rule 431 adopted November 6, 1991.

(*ii*) Town of Mammoth Lakes Municipal Code Chapter 8.30 dated October 2, 1991.

(229) New and amended regulations for the following APCDs were submitted on January 31, 1996, by the Governor's designee.

(i) Incorporation by reference.

(A) South Coast Air Quality Management District.

(*1*) Rule 461, adopted on September 8, 1995.

(*2*) Rule 701, adopted on September 9, 1995.

(230) New and amended regulations for the following APCDs were submitted on March 26, 1996, by the Governors designee.

(i) Incorporation by reference.

(A) Ventura County Air Pollution Control District.

(*1*) Rule 74.7, adopted on October 10, 1995.

(*2*) Rule 74.23, adopted on October 10, 1995.

(*3*) Rule 74.29, adopted on October 10, 1995.

(B) South Coast Air Quality Management District.

(*1*) Rule 1134, adopted on December 7, 1995.

(*2*) Rule 102 amended on November 17, 1995.

(C) Kern County Air Pollution Control District.

(*1*) Rule 427, adopted on January 25, 1996.

(*2*) Rule 427 adopted on July 2, 1998.

(D) San Joaquin Valley Unified Air Pollution Control District.

(*1*) Rule 4352, amended on October 19, 1995.

(*2*) Rule 4304 adopted on October 19, 1995.

(*3*) Rule 4351 adopted on October 19, 1995.

(E) Butte County Air Quality Management District.

(*1*) Rule 422, adopted on September 18, 1990.

(231) New and amended regulations for the following APCDs were submitted on May 10, 1996, by the Governor's designee.

(i) Incorporation by reference.

(A) Monterey Bay Unified APCD.

(*1*) Rules 207 and 215, adopted on March 20, 1996.

(B) Kern County Air Pollution Control District.

(*1*) Rule 102 and Rule 410.3, adopted on March 7, 1996.

(*2*) Rule 410.1, Rule 410.5, Rule 411, and Rule 414.5 amended on March 7, 1996.

(*3*) Rule 414, adopted on March 7, 1996.

(*4*) Rule 410.4A, adopted on May 6, 1991 and amended on March 7, 1996 and

Rule 410.7, adopted on June 29, 1981 and amended on March 7, 1996.

(*5*) [Reserved]

(*6*) Rule 410.4, adopted on June 26, 1979 and amended on March 7, 1996.

(*7*) Rules 413 adopted on April 18, 1972 and Rule 414.1 adopted on January 9, 1979, both amended on March 7, 1996.

(C) Mojave Desert Air Quality Management District.

(*1*) Rule 2002, adopted on October 26, 1994.

(D) Butte County Air Quality Management District.

(*1*) Rule 1105, adopted on February 15, 1996.

(E) Great Basin Unified Air Pollution Control District.

(*1*) Rules 218 and 219, adopted on December 4, 1995.

(232) New regulations for the following APCD were submitted on March 21, 1994, by the Governor's designee:

(i) Incorporation by reference.

(A) South Coast Air Quality Management District.

(*1*) Regulation XX, adopted October 15, 1993.

(*2*) Previously approved on November 8, 1996 now deleted without replacement for implementation in the Antelope Valley Air Pollution Control District, Regulation XX.

(233) New and amended plans for the following agencies were submitted on December 29, 1994, by the Governor's designee.

(i) Incorporation by reference.

(A) South Coast Air Quality Management District.

(*1*) 15% Rate-of-Progress plan and Post-1996 Rate-of-Progress plan for the Los Angeles-South Coast Air Basin Area, as contained in the "Rate-of-Progress Plan Revision: South Coast Air Basin & Antelope Valley & Coachella/San Jacinto Planning Area," adopted on December 9, 1994.

(B) Sacramento Metropolitan Air Quality Management District.

(*1*) Emissions inventory, Post-1996 Rate-of-Progress plan, modeling, and ozone attainment demonstration, as contained in "Sacramento Area Attainment and Rate-of-Progress Plans," adopted by Sacramento Metropolitan Air Quality Management District on December 1, 1994; by Feather River Air Quality Management District on December 12, 1994; by El Dorado County Air Pollution Control District on December 13, 1994; by Yolo-Solano Air Pollution Control District on December 14, 1994; and by Placer County Air Pollution Control District on December 20, 1994.

(234) The California Vehicle Inspection and Maintenance Program was submitted on January 22, 1996, by the Governor's designee.

(i) Incorporation by reference.

(A) California Air Resources Board.

(*1*) Motor Vehicle Inspection and Maintenance Program adopted on January 22, 1996.

(*i*) Health and Safety Code: Division 26, Part 5 § 39032.5; Chapter 5. Motor Vehicle Inspection Program, Article 1, Article 2, Article 3, Article 4, Article 5, Article 6, Article 7, Article 8, Article 9.

(*ii*) Business and Professions Code, Chapter 20.3, Automotive Repair, Article 4, § 9886, § 9886.1, § 9886.2, § 9886.4.

(*iii*) Vehicle Code § 4000.1, § 4000.2, § 4000.3, § 4000.6.

(*iv*) Title 16, California Code or Regulations, Division 33, Bureau of Automotive Repair, Article 5.5, Motor Vehicle Inspection Program, § 3340.1, § 3340.5, § 3340.6, § 3340.10, § 3340.15, § 3340.16, § 3340.16.5, § 3340.16.6, § 3340.17, § 3340.18, § 3340.22, § 3340.22.1, § 3340.22.2, § 3340.22.3, § 3340.23, § 3340.24, § 3340.28, § 3340.29, § 3340.30, § 3340.31, § 3340.32, § 3340.32.1, § 3340.33, § 3340.33.1, § 3340.35, § 3340.35, § 3340.36, § 3340.41, § 3340.41.3, § 3340.41.5, § 3340.42, § 3340.42.1., § 3340.50, § 3340.50.1, § 3340.50.3, § 3340.50.4, § 3340.50.5.

(235) New and amended regulations for the following APCD were submitted on December 10, 1993, by the Governor's designee.

(i) Incorporation by reference.

(A) San Joaquin Valley Unified Air Pollution Control District.

(*1*) Rule 4901, adopted on July 15, 1993.

(236) New and amended plans for the following agencies were submitted on June 13, 1996, by the Governor's designee.

(i) Incorporation by reference.

(A) California Air Resources Board.

(*1*) Letter dated June 13, 1996, from James D. Boyd to David Howekamp, including "Corrections to State and Local Measures" (Attachment A) and "Summary Emission Reduction Spreadsheets" (Attachment C).

(237) New and amended plans for the following agencies were submitted on July 10, 1996, by the Governor's designee.

(i) Incorporation by reference.

(A) South Coast Air Quality Management District.

(*1*) Revised rule adoption schedule, adopted on April 12, 1996.

(238) New and amended plans for the following agencies were submitted on July 12, 1996, by the Governor's designee.

(i) Incorporation by reference.

(A) Ventura County Air Pollution Control District.

(*1*) "Revised Rule Adoption and Implementation Schedule" (Table 4–2) and "Architectural Coatings" (Appendix E–95, Tables E–43 and E–45) contained in "Ventura County 1995 Air Quality Management Plan Revision," adopted on December 19, 1995.

(B) San Joaquin Valley Unified Air Pollution Control District.

(*1*) Post-1996 Rate-of-Progress plan, as contained in "San Joaquin Valley Revised Post-1996 Rate-of-Progress Plans," adopted on September 20, 1995.

(239) New and amended regulations for the following APCDs were submitted on July 23, 1996, by the Governor's designee:

(i) Incorporation by reference.

(A) Mojave Desert Air Quality Management District.

(*1*) Rules 1300–1306, adopted on March 25, 1996.

(*2*) Rule 1115, adopted on March 2, 1992, and amended on April 22, 1996.

(B) South Coast Air Quality Management District.

(*1*) Rule 1128, adopted on May 4, 1979 and amended on March 8, 1996, and Rule 1130, adopted on October 3, 1980 and amended on March 8, 1996.

(C) Kern County Air Pollution Control District.

(*1*) Rules 101, 112, 113, 114, and 115 amended on May 2, 1996.

(*2*) Rules 108 and 108.1 adopted on May 2, 1996.

(D) Ventura County Air Pollution Control District.

(*1*) Rule 2 amended on April 9, 1996.

(E) Bay Area Air Quality Management District.

(*1*) Rule 9–7 adopted on September 15, 1993, Rule 9–8 adopted on January 20, 1993, Rule 9–9 adopted on September 21, 1994, and Rule 9–12 adopted on January 19, 1994.

(*2*) Rule 8–4, Rule 8–11, Rule 8–12, Rule 8–13, Rule 8–14, Rule 8–19, Rule 8–20, Rule 8–23, Rule 8–29, Rule 8–31, Rule 8–32, Rule 8–38, Rule 8–43, Rule 8–45, Rule 8–50 amended on December 20, 1995.

(*3*) Rule 8–3, adopted on March 1, 1978, revised on December 20, 1995.

(*4*) Rule 9–11 amended November 15, 1995.

(*5*) Rule 8–26, adopted on May 7, 1980 and amended on December 20, 1995.

(*6*) Rule 9–10 adopted on January 5, 1994.

(*7*) Manual of Procedures, volume I, section 5, adopted on September 16, 1993.

(F) San Joaquin Valley Unified Air Pollution Control District.

(*1*) Rules 8010, 8020, 8030, 8040, 8060, and 8070 adopted on April 25, 1996.

(240) New and amended regulations for the following APCD were submitted on August 28, 1996 by the Governor's designee.

(i) Incorporation by reference.

(A) South Coast Air Quality Management District.

(*1*) Rules 212, 1301, 1302, 1309, 1309.1, 1310, and 1313, adopted on December 7, 1995, Rule 1303, adopted on May 10, 1996, and Rules 1304 and 1306, adopted on June 14, 1996.

(*2*) Rules 2000, 2001, 2002, 2004, 2006, 2007, 2011, 2011—Appendix A, 2012, 2012—Appendix A, and 2015 adopted on October 15, 1993 and amended on December 7, 1995.

(*3*) Rule 2012(j)(3)—Testing Guidelines (Protocol) for Alternative Nitrogen Oxides Emission Rate Determination at Process Units, dated March 31, 1994, adopted on December 7, 1995.

(*4*) Rule 2005 adopted on October 15, 1993 and amended on May 10, 1996.

(*5*) Rule 1136 adopted on September 16, 1983 and amended on June 14, 1996.

(241) New and amended regulations for the following APCD were submitted on October 18, 1996 by the Governor's designee.

(i) Incorporationed by reference.

(A) San Diego County Air Pollution Control District.

(*1*) Rules 2, Definitions; 67.0, Architectural Coatings; 67.1, Alternative Emission Control Plans; 67.2, Dry

Cleaning Equipment Using Petroleum-Based Solvents; 67.3, Metal Parts and Products Coating Operations; 67.5, Paper, Film, and Fabric Coating Operations; 67.7, Cutback and Emulsified Asphalts; 67.12, Polyester Resin Operations; 67.15, Pharmaceutical and Cosmetic Manufacturing Operations; 67.16, Graphic Arts Operations; 67.17, Storage of Materials Containing Volatile Organic Compounds; 67.18, Marine Coating Operations; and 67.24, Bakery Ovens, adopted on May 15, 1996.

(*2*) Rule 67.4, revised on May 15, 1996.

(*3*) Rule 66, adopted on July 1, 1972, revised on July 25, 1995.

(*4*) Rule 19.3 adopted on May 15, 1996.

(*5*) Rule 67.19, adopted May 15, 1996.

(B) Yolo-Solano Air Quality Management District.

(*1*) Rule 2.27, revised on August 14, 1996.

(C) Ventura County Air Pollution Control District.

(*1*) Rule 74.19.1, adopted on June 11, 1996.

(*2*) Rules 74.6.1, 74.6.2, and 74.6.3, adopted on July 9, 1996.

(*3*) Rule 23 adopted on July 9, 1996.

(D) Kern County Air Pollution Control District.

(*1*) Rules 416 and 417, adopted on April 18, 1972 and amended on July 11, 1996.

(242) New and amended regulations for the following APCDs were submitted on November 26, 1996, by the Governor's designee.

(i) Incorporation by reference.

(A) Mojave Desert AQMD.

(*1*) Rule 1118, adopted on October 28, 1996.

(B) South Coast Air Quality Management District.

(*1*) Rule 1113, adopted on September 2, 1977 and amended on November 8, 1996.

(*2*) Rule 1176, adopted on November 3, 1989 and amended on September 13, 1996.

(243) Transportation Air Quality Conformity Procedures and Transportation Conformity Consultation Procedures for the following AQMD were submitted on December 16, 1996, by the Governor's designee.

(i) Incorporation by reference.

(A) Bay Area Air Quality Management District.

(*1*) "The San Francisco Bay Area Transportation Air Quality Conformity Procedures," which includes sections 93.100-93.104 and sections 93.106–93.136, adopted on November 6, 1996.

(*2*) "The San Francisco Bay Area Transportation Air Quality Conformity Interagency Consultation Procedures," adopted on November 6, 1996.

(244) New and amended regulations for the following APCDs were submitted on March 3, 1997, by the Governor's designee.

(i) Incorporation by reference.

(A) Monterey Bay Unified Air Pollution Control District.

(*1*) Rule 101 revised on November 13, 1996.

(*2*) Rule 404, adopted on October 16, 1996.

(*3*) Rule 207, amended on December 18, 1996.

(*4*) Rule 434, adopted on December 18, 1996.

(*5*) Rule 426 revised December 18, 1996.

(B) San Diego County Air Pollution Control District.

(*1*) Amended Rule 10, adopted July 25, 1995.

(C) Mojave Desert Air Quality Management District.

(*1*) Rule 1114 adopted on March 2, 1992 and amended on November 25, 1996.

(D) South Coast Air Quality Management District.

(*1*) Rule 1130.1, adopted on August 2, 1991 and amended on December 13, 1996.

(E) San Joaquin Valley Unified Air Pollution Control District.

(*1*) Rule 6030 adopted on May 21, 1992; amended on November 13, 1996.

(*2*) Rule 4305 adopted on December 19, 1996.

(F) Santa Barbara County Air Pollution Control District.

(*1*) Rule 323 revised July 18, 1996.

(G) Ventura County Air Pollution Control District.

(*1*) Rules 74.12, 74.13, 74.18, 74.19, 74.24, and 74.30, amended on September 10, 1996.

(*2*) Rule 74.20, revised on January 14, 1997.

(245) New and amended regulations for the following APCDs were submitted on March 26, 1997, by the Governor's designee.

(i) Incorporation by reference.

(A) Yolo-Solano Air Quality Management District.

(*1*) Rule 3.4, adopted on December 11, 1996.

(B) San Diego County Air Pollution Control District.

(*1*) Amended Rule 21, adopted November 29, 1994.

(C) Monterey Bay Unified Air Pollution Control District.

(*1*) Rule 430, amended on January 15, 1997.

(*2*) Previously approved on February 9, 1999 in (245)(i)(C)(*l*) and now deleted without replacement Rule 430.

(246) New and amended regulations for the following APCDs were submitted on October 28, 1996, by the Governor's designee.

(i) Incorporation by reference.

(A) Northern Sierra Air Quality Management District.

(*1*) Rules 101, 202, 203, 204, 206, 207, 208, 209, 210, 221, 222, 223, 225, 300, 301, 314, 315, and 317, adopted on September 11, 1991, Rule 102 adopted on May 11, 1994, Rule 313 adopted on June 10, 1992, and Rule 316 adopted on August 14, 1996.

(*2*) Rule 211, adopted on September 11, 1991.

(*3*) Previously approved on September 16, 1997 in paragraph (c)(246)(i)(A)(*1*) of this section and now deleted without replacement, Rule 223.

(247) New and amended plans for the following agency were submitted on February 5, 1997, by the Governor's designee.

(i) Incorporation by reference.

(A) South Coast Air Quality Management District.

(*1*) Carbon monoxide emissions inventory, VMT forecasts and commitments to monitor actual VMT levels and revise and replace the VMT projections as needed in the future, as contained in the South Coast 1997 Air Quality Management Plan.

(*2*) Nitrogen dioxide attainment plan and maintenance plan, as contained in the South Coast 1997 Air Quality Management Plan, adopted on November 15, 1996.

(3) Baseline and projected emissions inventories and ozone attainment demonstration, as contained in the South Coast 1997 Air Quality Management Plan for ozone.

(4) Baseline and projected emissions inventories, SCAQMD commitment to adopt and implement control measures, reasonable further progress, contingency measures, attainment demonstration, PM–10 attainment date extension request to December 31, 2006, as contained in the South Coast 1997 Air Quality Management Plan, with respect to PM–10.

(*5*) SCAQMD commitment to adopt and implement control measures, as contained in the Coachella Request for Redesignation and Maintenance Plan for PM–10.

(248) New and amended regulations for the following APCDs were submitted on August 1, 1997, by the Governor's designee.

(i) Incorporation by reference.

(A) San Diego County Air Pollution Control District

(*1*) Rule 67.10 adopted on June 25, 1997.

(*2*) Rule 67.9, adopted on April 30, 1997.

(*3*) Rules 52, 53, 54, amended on January 27, 1997.

(B) South Coast AQMD.

(*1*) Rule 1124, adopted on December 13, 1996.

(*2*) Rule 403, amended on February 14, 1997, and Rule 1186, adopted on February 14, 1997.

(*3*) Rule 1145, adopted on July 8, 1983 and amended on February 14, 1997.

(C) Placer County Air Pollution Control District.

(*1*) Rule 239, adpoted on November 3, 1994 and amended on February 13, 1997.

(D) Mojave Desert Air Quality Management District.

(*1*) Rule 1157, amended May 19, 1997.

(E) Ventura County Air Pollution Control District.

(*1*) Rule 70 revised on May 13, 1997.

(F) Bay Area Air Quality Management District.

(*1*) Regulation 8, Rule 45, adopted on November 6, 1996.

(249) New and amended regulations for the following APCD's were submitted on September 8, 1997, by the Governor's designee.

(i) Incorporation by reference.

(A) South Coast Air Quality Management District.

(*1*) Rule 1122, adopted on March 2, 1979 and amended on July 11, 1997.

(*2*) Rule 701, amended on June 13, 1997.

(B) Kern County Air Pollution Control District.

(*1*) Rule 425.2 adopted on October 13, 1994 and amended on July 10, 1997.

(250) New regulations for the following APCD were submitted on October 31, 1997, by the Governor's designee.

(i) Incorporation by reference.

(A) Santa Barbara County Air Pollution Control District.

(*1*) Rule 1301 adopted on September 18, 1997.

(251) New and amended plans for the following agency were submitted on November 5, 1997, by the Governor's designee.

(i) Incorporation by reference.

(A) Ventura County Air Pollution Control District.

(*1*) Commitments to adopt and implement control measures contained in the Ventura 1997 Air Quality Management Plan, adopted on October 21, 1997.

(252) Air Quality Management Plan for the following APCD was submitted on December 28, 1992, by the Governor's designee.

(i) Incorporation by reference. (A) San Joaquin Valley Unified Air Pollution Control District.

(*1*) Federal 1992 Air Quality Attainment Plan for Carbon Monoxide and Appendices adopted on November 18, 1992.

(253) Carbon Monoxide Redesignation Request and Maintenance Plan for ten federal planning areas submitted on July 3, 1996, by the Governor's designee.

(i) Incorporation by reference.

(A) California Air Resources Board. (*1*) Carbon Monoxide Redesignation Request and Maintenance Plan for the following areas: Bakersfield Metropolitan Area, Chico Urbanized Area, Fresno Urbanized Area, Lake Tahoe North Shore, Lake Tahoe South Shore, Modesto Urbanized Area, Sacramento Area, San Diego Area, San Francisco-Oakland-San Jose Area, and Stockton Urbanized Area adopted on April 26, 1996.

(254) New and amended regulations for the following APCDs were submitted on March 10, 1998, by the Governor's designee.

(i) Incorporation by reference.

(A) San Joaquin Valley Unified Air Pollution Control District

(*1*) Rule 4401 adopted on January 15, 1998.

(*2*) Rule 4605, adopted on December 19, 1991 and amended on December 19, 1996.

(*3*) Rules 4602 and 4607, adopted on April 11, 1991 and amended on September 17, 1997.

(*4*) Rule 4661, adopted on December 17, 1992.

(*5*) Rule 4701 adopted on December 19, 1996, and Rule 4703 adopted on October 16, 1997.

(B) Northern Sonoma County Air Pollution Control District.

(*1*) Rule 130 amended on July 25, 1995.

(C) Santa Barbara County Air Pollution Control District.

(*1*) Rule 102 amended on April 17, 1998.

(*2*) Rule 339, adopted on November 5, 1991 and revised on April 17, 1997.

(*3*) Rule 321, adopted on February 24, 1971 and revised on September 18, 1997.

(*4*) Rule 342 amended on April 17, 1997.

(*5*) Rule 316 revised on April 17, 1997.

(D) South Coast Air Quality Management District.

(*1*) Rule 102 amended on June 13, 1997.

(*2*) Rule 1151, adopted on July 8, 1988 and amended on June 13, 1997, and Rule 1171, adopted on August 2, 1991 and amended on June 13, 1997.

(*3*) Rule 1302, amended December 7, 1995.

(*4*) Rule 1134 adopted on August 8, 1997.

(*5*) Rule 1138, adopted on November 14, 1997.

(E) Antelope Valley Air Pollution Control District.

(*1*) Resolution No. 97–01 dated July 1, 1997.

(*2*) Rules 101 and 102 amended on August 19, 1997 and Rule 103 amended on September 16, 1997.

(F) Bay Area Air Quality Management District.

(*1*) Regulation 5, adopted on November 2, 1994.

(G) Monterey Bay Unified Air Pollution Control District.

(*1*) Rule 431, adopted on December 17, 1997.

(H) Mojave Desert Air Quality Management District.

(*1*) Rules 474, 475, and 476 adopted on August 25, 1997.

(*2*) Rule 1158, adopted on February 22, 1995 and amended on August 25, 1997.

(I) Sacramento Metropolitan Air Quality Management District.

(*1*) Rule 414, adopted August 1, 1996.

(J) Lake County Air Quality Management District.

(*1*) Rule 640, as amended on July 15, 1997; and Rule 1350, adopted on October 15, 1996.

(*2*) Sections (Rules) 433, adopted on July 15, 1997.

(K) Ventura County Air Pollution Control District.

(*1*) Rule 59, adopted on October 6, 1969 and amended on July 15, 1997.

(L) Great Basin Unified Air Pollution Control District.

(*1*) Rule 432, adopted on May 8, 1996.

(255) New and amended regulations for the following APCD's were submitted on May 18, 1998, by the Governor's designee.

(i) Incorporation by reference.

(A) Sacramento Metropolitan Air Quality Management District.

(*1*) Rule 450, adopted on July 23, 1981 and amended on December 5, 1996, and Rule 459, adopted on December 7, 1995 and amended on October 2, 1997.

(*2*) Rules 101, 442, 443, 447, 452, 456, and 458, adopted on September 5, 1996.

(*3*) Rule 454, adopted on June 5, 1979 and amended on April 3, 1997.

(*4*) Rule 413, amended May 1, 1997.

(*5*) Rule 449, adopted on April 3, 1997.

(B) North Coast Unified Air Quality Management District.

(*1*) Rule 130 amended September 26, 1997.

(C) San Joaquin Valley Unified Air Pollution Control District.

(*1*) Rule 1020, amended December 18, 1997.

(D) Lake County Air Quality Management District.

(*1*) Rule 1002, as amended on March 19, 1996.

(*2*) Section (Rule) 439.5, adopted on July 15, 1997.

(E) Placer County Air Pollution Control District.

(*1*) Rule 102, adopted June 19, 1997.

(F) South Coast Air Quality Management District.

(*1*) Rule 1146.2, adopted on January 9, 1998.

(G) Ventura County Air Pollution Control District.

(*1*) Rules 26.1, 26.2, 26.3, 26.4, 26.5, 26.6 and 26.10 adopted on January 13, 1998.

(256) New and amended regulations for the following APCDs were submitted on June 23, 1998, by the Governor's designee.

(i) Incorporation by reference.

(A) Bay Area Air Quality Management District.

(*1*) Regulation 1, revised on November 3, 1993.

(*2*) Rule 8–51, adopted on November 18, 1992 and amended on January 7, 1998.

(B) San Diego County Air Pollution Control District.

(*1*) Rule 50, adopted on August 13, 1997.

(C) Kern County Air Pollution Control District.

(*1*) Rule 410.3, adopted on June 26, 1979 and revised on May 7, 1998.

(*2*) Rule 409, adopted on April 18, 1972, as amended on May 7, 1998.

(D) Antelope Valley Air Pollution Control District.

(*1*) Rule 701 was amended on January 20, 1998.

(E) El Dorado County Pollution Control District .

(*1*) Rule 239 adopted on March 24, 1998.

(F) Ventura County Air Pollution Control District.

(*1*) Rule 74.10, adopted on September 29, 1981 and amended on March 10, 1998.

(G) Sacramento Metropolitan Air Quality Management District.

(*1*) Rule 447 amended on April 2, 1998.

(257) Plan revisions for the Coachella Valley Planning Area were submitted on February 16, 1995, by the Governor's designee.

(i) Incorporation by reference.

(A) Fugitive dust control ordinances for: City of Cathedral City Ordinance No. 377, adopted on February 18, 1993; City of Coachella Ordinance No. 715, adopted on October 6, 1993; City of Desert Hot Springs Ordinance No. 93–2, adopted on May 18, 1993; City of Indian Wells Ordinance No. 313, adopted on February 4, 1993; City of Indio Ordinance No. 1138, adopted on March 17, 1993; City of La Quinta Ordinance No. 219, adopted on December 15, 1992; City of Palm Desert Ordinance No. 701, adopted on January 14, 1993; City of Palm Springs Ordinance No. 1439, adopted on April 21, 1993; City of Rancho Mirage Ordinance No. 575, adopted

on August 5, 1993; and County of Riverside Ordinance No. 742, adopted on January 4, 1994.

(258) New and amended regulations for the following APCD's were submitted on June 3, 1997, by the Governor's designee.

(i) Incorporation by reference.

(A) Monterey Bay Unified Air Pollution Control District.

(*1*) Rule 433, adopted on June 15, 1994 and revised on March 26, 1997.

(*2*) Rule 215, amended on March 26, 1997.

(*3*) Rule 425, adopted on March 26, 1997.

(259) New and amended regulations for the following APCDs were submitted on December 3, 1998, by the Governor's designee.

(i) Incorporation by reference.

(A) Yolo-Solano Air Quality Management District.

(*1*) Rule 10.3, adopted on February 8, 1995.

(260) New and amended regulations for the following APCDs were submitted on October 27, 1998, by the Governor's designee.

(i) Incorporation by reference.

(A) Sacramento Metropolitan Air Quality Management District.

(*1*) Rule 101, amended on September 3, 1998.

(B) San Joaquin Valley Unified Air Pollution Control District.

(*1*) Rule 2020 adopted on September 17, 1998.

(C) Kern County Air Pollution Control District.

(*1*) Rule 208, originally adopted on April 18, 1972, amended on September 17, 1998.

(261) New and amended regulations for the following APCDs were submitted on January 12, 1999, by the Governor's designee.

(i) Incorporation by reference.

(A) Monterey Bay Unified Air Pollution Control District.

(*1*) Rule 101, adopted November 12, 1998.

(262) New and amended regulations for the following APCDs were submitted on February 16, 1999, by the Governor's designee.

(i) Incorporation by reference.

(A) Bay Area Air Quality Management District.

(*1*) Regulation 1, adopted on October 7, 1998.

(B) Ventura County Air Pollution Control District.

(*1*) Rule 2, adopted November 10, 1998.

(*2*) Rule 74.24.1, adopted on November 10, 1998.

(*3*) Rule 74.6, revised on November 10, 1998.

(C) South Coast Air Quality Management District.

(*1*) Rule 1107, adopted on June 1, 1979 and amended on August 14, 1998.

(*2*) Rule 1151, adopted on December 11, 1998.

(D) San Joaquin Valley Unified Air Pollution Control District.

(*1*) Rule 4606 adopted on December 19, 1991 and amended on December 17, 1998.

(E) Antelope Valley Air Pollution Control District.

(*1*) Rule 1171, adopted on November 17, 1998.

(263) New and amended regulations for the following APCDs were submitted on May 13, 1999, by the Governor's designee.

(i) Incorporation by reference.

(A) South Coast Air Quality Management District.

(*1*) Rule 1103, adopted on March 12, 1999.

(*2*) Rule 102 adopted on February 4, 1977 and amended on June 12, 1998.

(*3*) Rules 403 and 1186, amended on December 11, 1998.

(B) Santa Barbara County Air Pollution Control District.

(*1*) Rule 102 adopted on January 21, 1999.

(*2*) Rule 351 adopted on August 24, 1993 and amended on August 20, 1998.

(C) Sacramento Metropolitan Air Quality Management District.

(*1*) Rule 464, adopted on July 23, 1998.

(D) Tehama County Air Pollution Control District.

(*1*) Rule 4:31 adopted on March 14, 1995, Rule 4:34 adopted on June 3, 1997, and Rule 4.37 adopted on April 21, 1998.

(*2*) Rule 4.14 adopted on November 3, 1998.

(264) New and amended regulations for the following APCDs were submitted on June 3, 1999, by the Governor's designee.

(i) Incorporation by reference.

(A) South Coast Air Quality Management District.

(*1*) Rule 462, adopted on May 14, 1999.

(*2*) Rule 1106.1, adopted on May 1, 1992, and amended on February 12, 1999.

(B) Yolo-Solano Air Quality Management District.

(*1*) Rule 2.30, adopted on April 14, 1999.

(C) Ventura County Air Pollution Control District.

(*1*) Rule 64, adopted on April 13, 1999.

(*2*) Rule 103 adopted on February 9, 1999.

(D) Monterey Bay Unified Air Pollution Control District.

(*1*) Rule 1002, adopted on April 21, 1999.

(265) New and amended plans for the following agencies were submitted on May 20, 1999, by the Governor's designee.

(i) Incorporation by reference.

(A) California Air Resources Board.

(*1*) Executive Order G–99–037, dated May 20, 1999, State commitment to continue working with U.S. EPA and the affected parties to achieve the emission reductions identified in the SIP for federal measures, and to adopt by December 31, 2000, and submit as a SIP revision, a revised attainment demonstration for the federal one-hour ozone standard in the South Coast Air Basin, and adopt by December 31, 2001, control measures needed to achieve any additional emission reductions which are determined to be appropriate for ARB; Attachment A, update to the 1994 ozone SIP for the South Coast.

(266) New and amended regulations for the following APCDs were submitted on September 29, 1998 by the Governor's designee.

(i) Incorporation by reference.

(A) South Coast Air Quality Management District.

(*1*) Rule 1168, adopted on April 7, 1989, and amended February 13, 1998.

(*2*) Rule 431.1, adopted on November 4, 1997 and amended on June 12, 1998.

(B) San Joaquin Valley Unified Air Pollution Control District.

(*1*) Rule 4653, adopted on March 19, 1998.

(*2*) Rule 4354, adopted on April 16, 1998.

(*3*) Rule 2201 adopted on August 20, 1998.

(*4*) Rule 4642, adopted on April 16, 1998.

(267) New plan for Owens Valley PM–10 Planning Area for the following agency was submitted on December 10, 1998 by the Governor's designee.

(i) Incorporation by reference.

(A) Great Basin Unified APCD.

(1) Owens Valley PM–10 Planning Area Demonstration of Attainment State Implementation Plan, Section 7–4, Commitment to adopt 2003 SIP Revision and Section 8–2, the Board Order adopted on November 16, 1998 with Exhibit 1.

(268) New and amended regulations for the following agencies were submitted on July 23, 1999, by the Governor's designee.

(i) Incorporation by reference.

(A) South Coast Air Quality Management District.

(*1*) Rule 2005 adopted on April 9, 1999.

(B) Mojave Desert Air Quality Management District.

(*1*) Rule 1116 revised on April 26, 1999.

(C) Lake County Air Quality Management District.

(*1*) Section (Rule) 226.5, adopted on September 13, 1988.

(269) New and amended regulations for the following APCDs were submitted on September 7, 1999, by the Governor's designee.

(i) Incorporation by reference.

(A) Kern County Air Pollution Control District.

(*1*) Rule 102, adopted on April 18, 1972 and amended on July 1, 1999.

(B) San Diego County Air Pollution Control District.

(*1*) Rule 2, adopted on June 30, 1999.

(C) San Joaquin Valley Unified Air Pollution Control District.

(*1*) Rule 1020, adopted on June 18, 1992 and amended on June 17, 1999.

(*2*) Rule 4452 adopted on December 17, 1992.

(D) South Coast Air Quality Management District.

(*1*) Rule 102, adopted on February 4, 1997 and amended on April 9, 1999.

(270) New and amended regulations for the following APCDs were submitted on October 29, 1999, by the Governor's designee.

(i) Incorporation by reference.

(A) Ventura County Air Pollution Control District.

(*1*) Rule 37 adopted September 14, 1999.

(B) Monterey Bay Unified Air Pollution Control District.

(*1*) Rule 207, amended on September 15, 1999.

(C) South Coast Air Quality Management District.

(*1*) Amended Rule 465, adopted on August 13, 1999.

(*2*) Rule 1104 adopted on April 7, 1978 and amended on August 13, 1999.

(*3*) Rule 1158, adopted on June 11, 1999.

(D) Santa Barbara County Air Pollution Control District.

(*1*) Rule 353, adopted on August 19, 1999.

(E) Antelope Valley Air Pollution Control District.

(*1*) Rule 1151 adopted on July 20, 1999.

(271) New and amended regulations for the following agencies were submitted on August 22, 1997, by the Governor's designee.

(i) Incorporation by reference.

(A) South Coast Air Quality Management District.

(*1*) Rule 2002 adopted on February 14, 1997.

(272) New and amended plan for the following agency was submitted on February 4, 2000, by the Governor's designee.

(i) Incorporation by reference.

(A) South Coast Air Quality Management District.

(1) SCAQMD commitment to adopt and implement short- and intermediate-term control measures; SCAQMD commitment to adopt and implement long-term control measures; SCAQMD commitment to achieve overall emissions reductions for the years 1999–2008; SCAQMD commitment to implement those measures that had been adopted in regulatory form between November 1994 and September 1999; rate-of-progress plan for the 1999, 2002, 2005, 2008, and 2010 milestone years; amendment to the attainment demonstration in the 1997 Air Quality Management Plan for ozone; and motor vehicle emissions budgets for purposes of transportation conformity, as contained in the 1999 Amendment to the South Coast 1997 Air Quality Management Plan.

(2) SCAQMD commitment to adopt and implement control measures, as contained in the 1999 Amendment to the South Coast Air Quality Management Plan, with respect to PM–10.

(273) New and amended regulations for the following APCD's were submitted on August 21, 1998, by the Governor's designee.

(i) Incorporation by reference.

(A) San Joaquin Valley Unified Air Pollution Control District.

(*1*) Rule 4621, amended on June 18, 1998.

(*2*) Rule 4622, adopted on June 18, 1998.

(274) New and amended regulations for the following APCD were submitted on June 29, 1995, by the Governor's designee.

(i) Incorporation by reference.

(A) Mojave Desert Air Quality Management District.

(*1*) Rule 1161, adopted on June 28, 1995.

(275) New and amended plan for the following agency was submitted on March 19, 1999, by the Governor's designee.

(i) Incorporation by reference.

(A) Santa Barbara County Air Pollution Control District.

(1) Control measures 333, 352, 353, T13, T18, T21, and T22; 1999 rate-of-progress plan; and motor vehicle emissions budgets (cited on page 5–4), as contained in the Santa Barbara 1998 Clean Air Plan.

(ii) Additional materials.

(A) Santa Barbara County Air Pollution Control District.

(1) Baseline and projected emissions inventories, and ozone attainment demonstration, as contained in the Santa Barbara 1998 Clean Air Plan.

(276) New and amended regulations for the following APCDs were submitted on February 23, 2000, by the Governor's designee.

(i) Incorporation by reference.

(A) Monterey Bay Unified Air Pollution Control District.

(*1*) Rules 101 and 102, adopted on December 15, 1999.

(B) San Joaquin Valley Unified Air Pollution Control District.

(*1*) Rule 4661, adopted on December 9, 1999.

(277) New and amended regulations for the following APCDs were submitted on March 28, 2000, by the Governor's designee.

(i) Incorporation by reference.

(A) Santa Barbara County Air Pollution Control District.

(*1*) Rule 330, adopted on June 11, 1979 and amended on January 20, 2000.

(B) Sacramento Metropolitan Air Quality Management District.

(*1*) Rule 701, adopted on May 27, 1999.

(C) Bay Area Air Quality Management District.

(*1*) Rule 8–11 adopted on January 24, 1979 and amended on November 19, 1997.

(*2*) Rule 8.20, amended on March 3, 1999.

(*3*) Rule 8–16, adopted on March 7, 1979 and amended on September 15, 1998.

(*4*) Rule 8–40 amended December 15, 1999.

(*5*) Bay Area Air Quality Management District Rule 8–52, adopted on July 7, 1999.

(*6*) Rule 8–7, adopted on November 17, 1999.

(*7*) Rule 8–5 adopted on December 15, 1999 and Rule 8–18 adopted on January 7, 1998.

(D) South Coast Air Quality Management District.

(1) Rule 1121 adopted on December 10, 1999.

(278) New and amended regulations for the following APCDs were submitted on January 21, 2000, by the Governor's designee.

(i) Incorporation by reference.

(A) South Coast Air Quality Management District.

(*1*) Rule 1130 amended on October 8, 1999.

(*2*) Rule 1186, adopted on September 10, 1999.

(B) Santa Barbara County Air Pollution Control District.

(*1*) Rule 352 adopted on September 16, 1999.

(C) Ventura County Air Pollution Control District.

(*1*) Rule 74.11.1 adopted on September 14, 1999.

(*2*) Rules 57 and 68, adopted on June 14, 1977.

(279) New and amended regulations for the following APCDs were submitted on May 26, 2000, by the Governor's designee.

(i) Incorporation by reference.

(A) Imperial County Air Pollution Control District.

(*1*) Rule 426 amended September 14, 1999

(*2*) Rules 101, 408, 409, 420, 421, 701, and 702, adopted on September 14, 1999.

(*3*) Rule 416, adopted on September 14, 1999.

(*4*) Rules 109 and 110 adopted on September 14, 1999.

(*5*) Rule 427, adopted on September 14, 1999.

(*6*) Rules 100 and 113, adopted on September 14, 1999.

(*7*) Rule 405, adopted on September 14, 1999.

(*8*) Rule 417 adopted on September 14, 1999.

(*9*) Rule 415, adopted on September 14, 1999.

(*10*) Rule 115 adopted on November 19, 1985 and amended on September 14, 1999.

(*11*) Rule 400, revised on September 14, 1999.

(B) Monterey Bay Unified Air Pollution Control District.

(*1*) Rule 404, Monterey Bay Unified APCD, adopted on March 22, 2000.

(*2*) Rule 403, adopted on March 22, 2000.

(*3*) Rule 400, adopted July 1, 1969 and amended on March 22, 2000.

(280) New and amended regulations for the following APCDs were submitted on July 26, 2000, by the Governor's designee.

(i) Incorporation by reference.

(A) South Coast Air Quality Management District.

(*1*) Rule 1189, adopted on January 21, 2000.

(*2*) Rule 461, adopted on April 21, 2000.

(*3*) Rule 1150.1, adopted on April 5, 1985 and amended on March 17, 2000.

(B) El Dorado County Air Pollution Control District.

(*1*) Rule 240, adopted on February 15, 2000.

(C) Yolo-Solano Air Quality Management District.

(*1*) Rule 1.1, revised on August 13, 1997.

(*2*) Rule 101, adopted on February 15, 2000.

(281) New and amended regulations for the following APCDs were submitted on May 23, 2001, by the Governor's designee.

(i) Incorporation by reference.

(A) El Dorado County Air Pollution Control District.

(*1*) Rules 238, 244, and 245, adopted on March 27, 2001.

(*2*) Rule 229, adopted on January 23, 2001.

(B) Monterey Bay Unified Air Pollution Control District.

(*1*) Rule 213 adopted on March 21, 2001.

(282) New and amended regulations for the following APCDs were submitted on May 31, 2001, by the Governor's designee.

(i) Incorporation by reference.

(A) South Coast Air Quality Management District.

(*1*) Rules 1631, 1632, 1633, and 2507 adopted on May 11, 2001.

(*2*) Rules 2000, 2001, 2002, 2004, 2006, 2007, 2010, 2011, 2012, 2015, and 2020 adopted on May 11, 2001; and Rules 2011–2 and 2012–2 adopted on March 16, 2001.

(B) Bay Area Air Quality Management District.

(*1*) Rule 8–51, revised on May 2, 2001.

(283) San Francisco Bay Area Ozone Attainment Plan for the 1-Hour National Ozone Standard, June 1999, was submitted on August 13, 1999 by the Governor's designee.

(i) Incorporation by reference.

(A) Bay Area Air Quality Management District.

(*1*) Tables 10 and 12 of the San Francisco Bay Area Ozone Attainment Plan for the 1-Hour National Ozone Standard, June 1999, which detail the commitment to adopt and implement any combination of new control measures to achieve 11 ton per day reduction in VOC emissions by June 2000.

(*2*) Contingency measures, Table 18, "Post-Attainment Year (2000–2003) Inventory Reductions Reflected in the SIP".

(284) New and amended regulations for the following APCDs were submitted on May 8, 2001, by the Governor's designee.

(i) Incorporation by reference.

(A) Monterey Bay Unified Air Pollution Control District.

(*1*) Rules 429 adopted on September 16, 1987 and amended on January 17, 2001 and Rule 434 adopted on June 15, 1994 and amended on January 17, 2001.

(*2*) Rules 418 and 419, adopted on December 13, 2000.

(*3*) Rule 416, adopted on September 1, 1974 and amended on January 17, 2001.

(*4*) Rule 433, adopted on January 17, 2001.

(B) South Coast Air Quality Management District.

(*1*)Rule 1612.1 adopted on March 16, 2001.

(*2*) Rule 1146, adopted on November 17, 2000.

(*3*) Rule 442 adopted on May 7, 1976 and amended on December 15, 2000.

(*4*) Rule 1102, adopted on January 6, 1978 and amended on November 17, 2000.

(*5*) Rule 1131 adopted on September 15, 2000.

(*6*) Rule 1132, adopted on January 19, 2001.

(C) Santa Barbara County Air Pollution Control District.

(*1*) Rule 326 adopted on December 14, 1993, and amended on January 18, 2001.

(*2*) Rule 346, adopted on January 18, 2001.

(D) Ventura County Air Pollution Control District.

(*1*) Rule 74.9, adopted on July 21, 1981 and amended on November 14, 2000.

(*2*) Rule 70, adopted on November 14, 2000.

(285) New and amended regulations for the following APCDs were submitted on December 11, 2000 by Governor's designee.

(i) Incorporation by reference.

(A) Ventura County Air Pollution Control District.

(*1*) Rule 74.15.1, adopted on June 13, 2000.

(B) San Joaquin Valley Unified Air Pollution Control District.

(*1*) Rule 4603 adopted on April 11, 1991 and amended on September 21, 2000.

(C) Bay Area Air Quality Management District.

(*1*) Rule 9–11, adopted on May 17, 2000.

(*2*) Regulation 8, Rule 34, adopted on October 6, 1999.

(D) Antelope Valley Air Pollution Control District.

(*1*) Rule 701, adopted on July 18, 2000.

(E) San Diego County Air Pollution Control District.

(*1*) Rule 61.2, amended on July 26, 2000.

(286) New and amended regulations for the following APCDs were submitted on March 14, 2001 by Governor's designee.

(i) Incorporation by reference.

(A) South Coast AQMD.

(*1*) Rule 109 amended on August 18, 2000, Rule 481 amended on November 17, 2000, Rule 1107 amended on November 17, 2000, Rule 1141.1 amended on November 17, 2000, Rule 1141.2 amended on November 17, 2000, and Rule 1162 amended on November 17, 2000.

(*2*) Rule 1168, amended on September 15, 2000.

(*3*) Rule 1141 adopted on July 8, 1983, and amended on November 17, 2000.

(287) New and amended regulations for the following APCD were submitted on November 8, 2001 by the Governor's designee.

(i) Incorporation by reference.

(A) Mojave Desert Air Quality Management District.

(1) Rule 1161 adopted on October 22, 2001.

(288) New and amended regulations for the following APCDs were submitted on October 30, 2001, by the Governor's designee.

(i) Incorporation by reference.

(A) San Joaquin Valley Unified Air Pollution Control District.

(*1*) Rules 4103 and 4106, adopted on June 21, 2001.

(B) Lake County Air Quality Management District.

(*1*) Sections [Rules] 203, 204.5, 208.3, 208.8, 226.4, 226.5, 240.8, 246, 248.3, 248.5, 249.5, 251.7, 270, 431, 431.5, 433, 434, 1000, 1001, 1003, 1105, 1107, 1130, 1140, 1145, 1150, 1160, and 1170, adopted on June 19, 2001.

(C) Ventura County Air Pollution Control District.

(*1*) Rule 74.19 adopted on August 11, 1992 and amended on April 10, 2001.

(D) Imperial County Air Pollution Control District.

(*1*) Rules 412 and 413 adopted on January 16, 2001.

(*2*) Rule 403, adopted on November 19, 1985 and revised on July 24, 2001.

(E) South Coast Air Quality Management District.

(*1*) Rule 2005 adopted on April 20, 2001.

(289) New and amended regulation for the following AQMD were submitted on November 28, 2001, by the Governor's designee.

(i) Incorporation by reference.

(A) Yolo-Solano Air Quality Management District.

(1) Rule 2.32 adopted on October 10, 2001.

(290) New and amended regulations for the following APCDs were submitted on December 14, 2001, by the Governor's designee.

(i) Incorporation by reference.

(A) Kern County Air Pollution Control District.

(*1*) Rule 427, adopted on November 1, 2001.

(291) [Reserved]

(292) New and amended regulations for the following APCDs were submitted on November 7, 2001, by the Governor's designee.

(i) Incorporation by reference.

(A) Monterey Bay Air Pollution Control District.

(*1*) Rule 431, adopted on October 17, 2001.

(B) Santa Barbara County Air Pollution Control District.

(*1*) Rule 325 adopted on January 25, 1994, and amended on July 19, 2001.

(293) New and amended regulations for the following APCDs were submitted on January 22, 2002, by the Governor's designee.

(i) Incorporation by reference.

(A) South Coast Air Quality Management District.

(*1*) Rules 208 and 444, adopted on December 21, 2001.

(*2*) Rule 1124 adopted on July 6, 1979, and amended on September 21, 2001.

(*3*) Rule 1634, adopted on November 9, 2001.

(B) Yolo-Solano Air Quality Management District.

(*1*) Rule 2.14, adopted on November 14, 2001.

(294) New and amended regulations for the following APCD were submitted on February 20, 2002, by the Governor's designee.

(i) Incorporation by reference.

(A) San Joaquin Valley Unified Air Pollution Control District.

(*1*) Rule 4653, amended on December 20, 2001.

(*2*) Rule 4603 adopted on April 11, 1991, and amended on December 20, 2001.

(*3*) Rule 4602 adopted on April 11, 1991 and amended on December 20, 2001; Rule 4604 adopted on April 11, 1991 and amended on December 20, 2001; Rule 4606 adopted on December 19, 1991 and amended on December 20, 2001; Rule

4607 adopted on April 11, 1991 and amended on December 20, 2001; and, Rule 4684 adopted on May 19, 1994 and amended on December 20, 2001.

(*4*) Rule 4661, adopted on May 21, 1992 and amended on December 20, 2001, Rule 4662, adopted April 11, 1991 and amended on December 20, 2001, and Rule 4663, adopted on December 20, 2001.

(*5*) Rule 4605 adopted on December 19, 1991 and amended on December 20, 2001.

(295) New and amended regulations for the following APCD were submitted on February 8, 2002, by the Governor's designee.

(i) Incorporation by reference.

(A) Tehama County Air Pollution Control District.

(*1*) Rules 4:31 and 4:37 adopted on January 29, 2002.

(296) New and amended regulations for the following APCD were submitted on November 9, 2001, by the Governor's designee.

(i) Incorporation by reference.

(A) El Dorado County Air Pollution Control District.

(*1*) Rule 244 adopted on March 27, 2001, and amended on September 25, 2001.

(*2*) Rule 232, adopted on October 18, 1994 and amended on September 25, 2001.

(297) New and amended regulations for the following APCDs were submitted on March 15, 2002, by the Governor's designee.

(i) Incorporation by reference.

(A) Ventura County Air Pollution Control District.

(*1*) Rule 74.6, adopted on January 8, 2002.

(*2*) Rule 74.29 adopted on October 10, 1995, and amended on January 8, 2002.

(*3*) Rule 74.24.1 adopted on November 10, 1998, and amended on January 8, 2002.

(*4*) Rule 74.23, adopted on January 8, 2002.

(*5*) Rule 74.2, adopted on November 13, 2001.

(B) Imperial County Air Pollution Control District.

(*1*) Rule 101, adopted on July 28, 1981 and amended on December 11, 2001.

(C) South Coast Air Quality Management District.

(*1*) Rule 1107 adopted on June 1, 1979, and amended on November 9, 2001.

(*2*) Rule 518.2 adopted on January 12, 1996, amended on December 21, 2001.

(D) Monterey Bay Unified Air Pollution Control District.

(*1*) Rule 427, adopted on January 16, 1980 and amended on December 19, 2001.

(*2*) Rule 417 adopted on September 1, 1974, and amended on December 19, 2001.

(E) San Joaquin Valley Unified Air Pollution Control District.

(*1*) Rule 4601, adopted on October 31, 2001.

(*2*) Rule 4623, adopted on April 11, 1991 and amended on December 20, 2001.

(F) Santa Barbara County Air Pollution Control District.

(*1*) Rule 323, adopted on November 15, 2001.

(298) New and amended contingency measures for the following APCDs were submitted on May 29, 2002, by the Governor's designee.

(i) Incorporation by reference.

(A) Santa Barbara County Air Pollution Control District.

(*1*) 2001 Clean Air Plan Contingency Control Measures R–SC–1 (Architectural Coatings); N–IC–1 and N–IC–3 (Control of Emissions from Reciprocating Internal Combustion Engines); N–XC–2 (Large Water Heaters and Small Boilers, Steam Generators, and Process Heaters); R–SL–2 (Solvent Degreasers) [incorrectly identified as CAP Control Measure R–SL–1 in Table 4–3, "Proposed APCD Control Measures"]; R–SL–2 (Solvent Cleaning Operations); N–IC–2 (Gas Turbines); R–SL–4 (Electronic Industry—Semiconductor Manufacturing); N–XC–4 (Small Industrial and Commercial Boilers, Steam Generators, and Process Heaters), adopted on November 15, 2001.

(299) Amended regulation for the following APCD was submitted on July 2, 2002, by the Governor's designee.

(i) Incorporation by reference.

(A) El Dorado County Air Pollution Control District.

(*1*) Rule 233, adopted on October 18, 1994, and amended on June 11, 2002.

(300) Amended regulations for the following APCDs were submitted on June 18, 2002, by the Governor's designee.

(i) Incorporation by reference.

(A) Mojave Desert Air Quality Management District.

(*1*) Rule 1161 amended on March 25, 2002.

(B) Bay Area Air Quality Management District.

(*1*) Rule 8–3, adopted on November 21, 2001.

(C) Monterey Bay Unified Air Pollution Control District.

(*1*) Rule 426, adopted on April 17, 2002.

(D) San Joaquin Valley Unified Air Pollution Control District.

(*1*) Rule 4703 adopted on April 25, 2002.

(301) Amended regulation for the following APCD was submitted on March 5, 2002, by the Governor's designee.

(i) Incorporation by reference.

(A) San Joaquin Valley Unified Air Pollution Control District.

(*1*) Rule 4354, adopted September 14, 1994 and amended February 21, 2002.

(302) New and amended regulations for the following APCDs were submitted on October 16, 2002, by the Governor's designee.

(i) Incorporation by reference.

(A) Imperial County Air Pollution Control District.

(*1*) Rule 701, revised on August 13, 2002.

(*2*) Rule 101, adopted on August 13, 2002.

(*3*) Rule 420 adopted on November 11, 1985, and amended on August 13, 2002.

(B) Monterey Bay Unified Air Pollution Control District.

(*1*) Rule 408, adopted on September 1, 1974 and revised on August 21, 2002.

(*2*) Rule 415, adopted on August 21, 2002.

(*3*) Rule 414, adopted on August 21, 2002.

(*4*) Rules 412 and 413, adopted on September 1, 1974 and revised on August 21, 2002.

(303) New and amended regulations for the following APCDs were submitted on August 6, 2002, by the Governor's designee.

(i) Incorporation by reference.

(A) Santa Barbara County Air Pollution Control District.

(*1*) Rule 401, adopted on October 18, 1971 and revised on May 16, 2002.

(B) Yolo Solano Air Quality Management District.

(*1*) Rule 2.22, revised on June 12, 2002.

(*2*) Rule 2.21, adopted on March 23, 1994 and amended on June 12, 2002.

(C) San Joaquin Valley Unified Air Pollution Control District.

(*1*) Rule 4311 adopted on June 20, 2002.

(*2*) Rule 4661, adopted on May 16, 2002.

(*3*) Rule 4693, adopted on May 16, 2002.

(304) New and amended regulations for the following APCD were submitted on December 6, 2001, by the Governor's designee.

(i) Incorporation by reference.

(A) San Joaquin Valley Unified Air Pollution Control District.

(*1*) Rules 8011, 8021, 8031, 8041, 8051, 8061, 8071, and 8081, adopted on November 15, 2001.

(305) Amended regulations for the following APCD were submitted on May 20, 2002 by the Governor's designee.

(i) Incorporation by reference.

(A) Ventura County Air Pollution Control District.

(1) Rules 10, 26.1, 26.2, 26.3, 26.4, 26.6, and 26.11 adopted on May 14, 2002.

(306) The following plan was submitted on December 5, 2002, by the Governor's designee.

(i) Incorporation by reference.

(A) Kern County Air Pollution Control District.

(1) PM–10 (Respirable Dust) Attainment Demonstration, Maintenance Plan, and Redesignation Request (excluding pages 4–1, 4–2, 6–1, 6–2, Appendix A, and pages D–12 through D–37 of Appendix D) adopted on September 5, 2002.

(B) California Air Resources Board, California.

(1) California Air Resources Board Executive Order G–125–295 adopted on December 4, 2002.

(307) New and amended regulations for the following APCDs were submitted on November 19, 2002, by the Governor's designee.

(i) Incorporation by reference.

(A) Sacramento Metropolitan Air Quality Management District.

(*1*) Rule 449, adopted on February 5, 1975 and amended on September 26, 2002.

(B) San Joaquin Valley Unified Air Pollution Control District.

(*1*) Rule 4622, adopted on May 21, 1992 and amended on September 19, 2002.

(C) San Diego County Air Pollution Control District.

(*1*) Rule 101, adopted on September 25, 2002.

(*2*) Rule 67.11.1, adopted on September 25, 2002.

(D) South Coast Air Quality Management District.

(*1*) Rule 1137 adopted on February 1, 2002.

(308) New and amended regulations for the following APCDs were submitted on December 12, 2002, by the Governor's designee.

(i) Incorporation by reference.

(A) Bay Area Air Quality Management District.

(*1*) Rule 8–7, amended on November 6, 2002.

(B) Lake County Air Quality Management District.

(*1*) Sections 226.5, 232.1, 238.5, 249.3, 250.5, 433.5, 436, and 436.5, adopted on October 1, 2002 and Sections 431.5, 431.7, 432.5, and 433, amended on October 1, 2002.

(C) Sacramento Metropolitan Air Quality Management District.

(*1*) Rule 307, adopted on September 26, 2002.

(D) South Coast Air Quality Management District.

(*1*) Rule 1631, amended on October 4, 2002.

(309) New and amended plan for the following agency was submitted on November 18, 2002, by the Governor's designee.

(i) Incorporation by reference.

(A) South Coast Air Quality Management District (SCAQMD).

(1) SCAQMD commitment to adopt and implement control measures, and reasonable further progress, as contained in the Implementation Status of the PM–10 Portion of the 1997 AQMP and PM–10 Emissions Budgets for Transportation Conformity use (2002 status report) adopted by SCAQMD on June 7, 2002.

(*2*) Baseline and projected emissions inventories, SCAQMD commitment to adopt and implement control measures, reasonable further progress, contingency measures, attainment demonstration, PM–10 attainment date extension, and motor vehicle emissions budgets, as contained in Chapters 3, 4, 5, 6 and 8 of the 2002 Coachella Valley PM–10 SIP adopted by SCAQMD on June 21, 2002, and the 2002 Coachella Valley PM–10 SIP Addendum (Appendix E) adopted by SCAQMD on September 13, 2002.

(310) New and amended rules for the following districts were submitted on May 21, 2002, by the Governor's designee.

(i) Incorporation by reference.

(A) San Joaquin Valley Unified Air Pollution Control District.

(*1*) Rule 4692, adopted on March 21, 2002.

(B) South Coast Air Quality Management District.

(*1*) Rule 1178 adopted on December 21, 2001; Rule 481 adopted on October 7, 1977 and amended on January 11, 2002; and, Rule 1141.2 adopted on July 6, 1984 and amended on January 11, 2002.

(311) New and amended rules for the following districts were submitted on December 23, 2002, by the Governor's designee.

(i) Incorporation by reference.

(A) South Coast Air Quality Management District.

(*1*) Rule 1171, adopted on August 2, 1991 and amended on August 2, 2002.

(B) San Joaquin Valley Unified Air Pollution Control District.

(*1*) Rules 2020 and 2201 adopted on December 19, 2002.

(312) New and amended rules for the following districts were submitted on January 21, 2003, by the Governor's designee.

(i) Incorporation by reference.

(A) Bay Area Air Quality Management District.

(*1*) Rules 8.5 and 8.18, amended on November 27, 2002, and adopted on January 1, 1978 and October 1, 1980, respectively.

(B) Santa Barbara County Air Pollution Control District.

(*1*) Rule 360, adopted on October 17, 2002.

(313) New and amended plan for the following agency was submitted on December 20, 2002, by the Governor's designee.

(i) Incorporation by reference.

(A) San Diego County Air Pollution Control District.

(*1*) Ozone Redesignation Request and Maintenance Plan for San Diego County, including motor vehicle emissions budgets for 2010 and 2014, Resolution #02–389, adopted on December 11, 2002.

(314) New and amended plan for the following agency was submitted on February 21, 2003, by the Governor's designee.

(i) Incorporation by reference.

(A) Santa Barbara County Air Pollution Control District.

(*1*) Emission Inventories, 1-hour ozone maintenance demonstration, commitments to continue ambient monitoring and to track progress, and contingency measures, as contained in the Final 2001 Clean Air Plan adopted on December 19, 2002.

(315) New and amended regulations for the following APCDs were submitted on April 1, 2003, by the Governor's designee.

(i) Incorporation by reference.

(A) Bay Area Air Quality Management District.

(*1*) Rule 8–4, amended on October 16, 2002 and Rule 8–16, adopted on March 7, 1979 and amended on October 16, 2002.

(*2*) Rule 8–31 adopted on September 7, 1983 and amended on Ocotober 16, 2002; and Rule 8–43 adopted on November 23, 1988 and amended on October 16, 2002.

(B) San Joaquin Valley Unified Air Pollution Control District.

(*1*) Rule 4408, adopted on December 19, 2002.

(*2*) Rule 4610, adopted on December 19, 2002.

(C) Mojave Desert Air Quality Management District.

(*1*) Rule 1113, adopted on February 24, 2003.

(316) New and amended regulations for the following APCDs were submitted on June 5, 2003, by the Governor's designee.

(i) Incorporation by reference.

(A) Kern County Air Pollution Control District.

(*1*) Rule 417, originally adopted on April 18, 1972, amended on March 13, 2003.

(B) San Joaquin Valley Unified Air Pollution Control District.

(*1*) Rule 4313, adopted on March 27, 2003.

(C) San Diego County Air Pollution Control District.

(*1*) Rule 67.3 adopted on May 9, 1979 and amended on April 9, 2003.

(D) [Reserved]

(E) Yolo-Solano Air Quality Management District.

(*1*) Rule 2.33, revised on March 12, 2003.

(317) The plan and amended regulation for the following APCD were submitted on August 19, 2003, by the Governor's designee.

(i) Incorporation by reference.

(A) San Joaquin Valley Unified Air Pollution Control District.

(*1*) Rule 4901, adopted on July 15, 1993 and amended on July 17, 2003.

(*2*) 2003 PM10 Plan, San Joaquin Valley Plan to Attain Federal Standards for Particulate Matter 10 Microns and Smaller (all except "Contingency Control Measures" section, pages 4–53 to 4–55), adopted on June 19, 2003, and "Regional Transportation Planning Agency Commitments for Implementation," dated April 2003 (Volume 3).

(318) Amended regulation for the following APCD was submitted on September 19, 2003, by the Governor's designee.

(i) Incorporation by reference.

(A) Ventura County Air Pollution Control District.

(*1*) Rule 74.20, adopted on September 9, 2003.

(319) Amended regulation for the following APCD was submitted on November 14, 2003, by the Governor's designee.

(i) Incorporation by reference.

(A) South Coast Air Quality Management District.

(*1*) Rule 1168, amended on October 3, 2003.

(320) New and amended regulations for the following APCDs were submitted on August 11, 2003, by the Governor's designee.

(i) Incorporation by reference.

(A) Monterey Bay Unified Air Pollution Control District.

(*1*) Rule 438, adopted on April 16, 2003.

(*2*) Rule 1002, adopted on February 22, 1989 and revised on April 16, 2003.

(B) South Coast Air Quality Management District.

(*1*) Rule 109 adopted on May 5, 1989 and amended on May 2, 2003; and, Rule 1131 adopted on September 15, 2000 and amended on June 6, 2003.

(321) New and amended regulations for the following APCDs were submitted on November 4, 2003, by the Governor's designee.

(i) Incorporation by reference.

(B) San Joaquin Valley Unified Air Pollution Control District.

(*1*) Rule 4902, adopted on June 17, 1993.

EDITORIAL NOTE: The following paragraph (B) (*1*) was added at 69 FR 21715, Apr. 22, 2004.

(B) Kern County Air Pollution Control District.

(*1*) Rules 108 and 417, originally adopted on April 18, 1972, amended on July 24, 2003.

(322) New and amended plan for the following agency was submitted on December 9, 2003, by the Governor's designee.

(i) Incorporation by reference.

(A) Kern County Air Pollution Control District.

(*1*) East Kern County Ozone Attainment Demonstration, Maintenance Plan and Redesignation Request, adopted on May 1, 2003: Chapter 5—''Regional Forecast,'' including emissions inventory summary (Table 5–1) and motor vehicle emissions budgets (Table 5–2); Chapter 6—''Emission Control Measures,'' including contingency measures (Table 6–1); and Appendix B—''Emission Inventories.''

(323) The following plan was submitted on November 30, 2001 by the Governor's designee.

(i) Incorporation by Reference

(A) Bay Area Air Quality Management District

(*1*) San Francisco Bay Area Ozone Attainment Plan for the 1-hour National Ozone Standard (Section 3: Emission Inventory; Section 5: Control Strategy, except subsection ''Demonstrating Reasonable Further Progress'' Appendix B: Control Measure Descriptions; Appendix C: Reasonably Available Control Measure Analysis; Appendix E: Further Study Measure Descriptions;) adopted on October 24, 2001.

(324) Amended regulation for the following AQMD was submitted on April 1, 2004, by the Governor's designee.

(i) Incorporation by reference.

(A) South Coast Air Quality Management District.

(*1*) Rule 1132, adopted on January 19, 2001 and amended on March 5, 2004.

(325) Amended regulations for the following APCD were submitted on September 29, 2003, by the Governor's Designee.

(i) Incorporation by reference.

(A) San Joaquin Valley Unified Air Pollution Control District.

(*1*) Rules 4305 and 4351 adopted on August 21, 2003, and Rule 4306 adopted on September 18, 2003.

(326) Amended regulations for the following APCD were submitted on October 9, 2003, by the Governor's Designee.

(i) Incorporation by reference.

(A) San Joaquin Valley Unified Air Pollution Control District.

(*1*) Rules 4701 and 4702 adopted on August 21, 2003.

(327) The following plan was submitted on December 30, 2003 by the Governor's designee.

(i) Incorporation by reference.

(A) San Joaquin Valley Unified Air Pollution Control District.

(*1*) Amendments to the 2003 San Joaquin Valley Plan to Attain Federal Standards for Particulate Matter 10 Microns and Smaller, adopted December 18, 2003.

[37 FR 10850, May 31, 1972]

EDITORIAL NOTES: 1. For FEDERAL REGISTER citations affecting §52.220, see the List of CFR Sections Affected, which appears in the Finding Aids section of the printed volume and on GPO Access.

EFFECTIVE DATE NOTE 1: At 69 FR 29076, May 20, 2004, §52.220 was amended by adding paragraph (c)(220)(i)(E), effective July 19, 2004. For the convenience of the user, the added text follows:

§ 52.220 Identification of plan.

* * * * *

(c) * * *

(220) * * *

(i) * * *

(E) Ventura County Air Pollution Control District.

(*1*) Rule 34 adopted on March 14, 1995.

* * * * *

EFFECTIVE DATE NOTE 2: At 69 FR 29453, May 24, 2004, § 52.220 was amended by adding paragraphs (c)(277)(i)(C)(*8*), (320)(i)(A)(*3*), and (328), effective July 23, 2004. For the convenience of the user, the added text follows:

§ 52.220 Identification of plan.

* * * * *

(c) * * *
(277)
(i) * * *
(C) * * *
(*8*) Rule 8–28, adopted on July 16, 1980 and amended on March 18, 1998.

* * * * *

(320) * * *
(i) * * *
(A) * * *
(*3*) Rule 418, adopted on September 1, 1974 and revised on April 16, 2003.

* * * * *

(328) Amended regulations for the following APCDs were submitted on January 15, 2004, by the Governor's Designee.
(i) Incorporation by reference.
(A) Ventura County Air Pollution Control District
(*1*) Rule 70, adopted on June 25, 1974 and revised on November 11, 2003.

EFFECTIVE DATE NOTE 3: At 69 FR 29882, May 26, 2004, § 52.220 was amended by adding paragraphs (c)(190)(i)(C) to (G) and (c)(194)(i)(I) and (J), effective July 26, 2004. For the convenience of the user the added text follows:

§ 52.220 Identification of plan.

* * * * *

(c) * * *
(190) * * *
(i) * * *
(C) El Dorado County Air Pollution Control District.
(*1*) Rule 1000 adopted on September 21, 1992.
(D) Feather River Air Pollution Control District.
(*1*) Rule 4.8 adopted on September 14, 1992.
(E) Kern County Air Pollution Control District.
(*1*) Rule 108.2 adopted on July 13, 1992.
(F) San Bernardino County Air Pollution Control District (now Mojave Desert Air Quality Management District).
(*1*) Rule 107 adopted on September 14, 1992.
(G) Santa Barbara County Air Pollution Control District.
(*1*) Rule 212 adopted on October 20, 1992.

* * * * *

(194) * * *
(i) * * *
(I) Sacramento Metropolitan Air Quality Management District.
(*1*) Rule 105 adopted on April 20, 1993.
(J) Yolo-Solano Air Quality Management District.
(*1*) Rule 3.18 adopted on July 28, 1993.

* * * * *

EFFECTIVE DATE NOTE 4: At 69 FR 31741, June 7, 2004, § 52.220 was amended by adding paragraphs (c)(321)(i)(C) and (328)(i)(A)(*2*), effective Aug. 6, 2004. For the convenience of the user the added text follows:

§ 52.220 Identification of plan.

* * * * *

(c) * * *
(321) * * *
(i) * * *
(C) Great Basin Unified Air Pollution Control District.
(*1*) Rule 406, adopted on January 21, 1976 and revised on September 24, 2003.
(*2*) Rule 407, adopted on September 5, 1974 and revised on September 24, 2003.

* * * * *

(328) * * *
(i) * * *
(A) * * *
(*2*) Rule 56, adopted on October 22, 1968 and amended on November 11, 2003.

* * * * *

§ 52.221 Classification of regions.

The California plan was evaluated on the basis of the following classifications:

Air quality control region	Pollutant				
	Particulate matter	Sulfur oxides	Nitrogen dioxide	Carbon monoxide	Photochemical oxidants (hydrocarbons)
North Coast Intrastate	II	III	III	III	III
San Francisco Bay Area Intrastate	II	II	III	I	I
North Central Coast Intrastate	II	III	III	III	I
South Central Coast Intrastate	III	III	III	III	III
Metropolitan Los Angeles Intrastate	I	II	I	I	I
Northeast Plateau Intrastate	III	III	III	III	III
Sacramento Valley Intrastate	II	III	III	I	I
San Joaquin Valley Intrastate	I	III	III	I	I
Great Basin Valley Intrastate	III	III	III	III	III
Southeast Desert Intrastate	I	III	III	III	I
San Diego Intrastate	II	III	III	I	I
Lake County Intrastate	II	III	III	III	III
Lake Tahoe Intrastate	II	III	III	I	I
Mountain Counties Intrastate	II	III	III	I	I

[37 FR 10850, May 31, 1972, as amended at 39 FR 16346, May 8, 1974; 46 FR 3884, Jan. 16, 1981]

§ 52.222 Negative declarations.

(a) The following air pollution control districts submitted negative declarations for volatile organic compound source categories to satisfy the requirements of section 182 of the Clean Air Act, as amended. The following negative declarations are approved as additional information to the State Implementation Plan.

(1) Mojave Desert Air Quality Management District.

(i) Natural Gas and Gasoline Processing Equipment and Chemical Processing and Manufacturing were submitted on July 13, 1994 and adopted on May 25, 1994.

(ii) Asphalt Air Blowing was submitted on December 20, 1994 and adopted on October 26, 1994.

(iii) Vacuum Producing Devices or Systems was submitted on December 29, 1994 and adopted on December 21, 1994.

(iv) Synthetic Organic Chemical Manufacturing Industry (SOCMI) Distillation, SOCMI Reactors, SOCMI Batch Processing, Offset Lithography, Industrial Wastewater, Plastic Parts Coating (Business Machines), Plastic Parts (Other), and Ship Building were submitted on August 7, 1995 and adopted on June 28, 1995.

(2) Sacramento Metropolitan Air Quality Management District.

(i) Plastic Parts Coating: Business Machines and Plastic Parts Coating: Other were submitted on June 6, 1996 and adopted on May 2, 1996.

(3) Santa Barbara County Air Pollution Control District.

(i) Industrial Wastewater, Plastic Parts Coating: Business Machines, Plastic Parts Coating: Other, Industrial Cleaning Solvents, Offset Lithography, and Shipbuilding Coatings were submitted on July 12, 1996 and adopted on May 16, 1996.

(ii) Synthetic Organic Chemical Manufacturing Industry (SOCMI) Batch Processing, SOCMI Reactors, and SOCMI Distillation; and Wood Furniture Manufacturing Operations were submitted on April 9, 2002 and adopted on February 21, 2002.

(4) Placer County Air Pollution Control District.

(i) Aerospace Coatings; Industrial Waste Water Treatment; Plastic Parts Coating: Business Machines; Plastic Parts Coating: Other; Shipbuilding and Repair; Synthetic Organic Chemical Manufacturing, Batch Plants; and Synthetic Organic Chemical Manufacturing, Reactors were submitted on February 25, 1998 and adopted on October 7, 1997.

(5) San Diego County Air Pollution Control District.

(i) Synthetic organic chemical manufacturing (distillation), synthetic organic chemical manufacturing (reactors), wood furniture, plastic parts coatings (business machines), plastic parts coatings (other), offset lithography, industrial wastewater, autobody refinishing, and volatile organic liquid storage were submitted on February 25, 1998 and adopted on October 22, 1997.

(6) Antelope Valley Air Pollution Control District.

(i) Motor Vehicle Assembly Line Coating Operations submitted on January 12, 1999 and adopted on November 18, 1997.

(ii) Refinery Process Turnarounds submitted on February 16, 1999 and adopted on November 18, 1997.

(iii) Marine Vessel Coating Operations, Marine Tank Vessel Operations, and Thermal Enhanced Oil Recovery Wells submitted on June 23, 1998 and adopted on January 20, 1998.

(iv) Pharmaceuticals and Cosmetic Manufacturing Operations submitted on March 28, 2000 and adopted on January 18, 2000.

(7) El Dorado County Air Pollution Control District.

(i) Bulk Terminal Facilities or External or Internal Floating Roof Tank Sources was submitted on May 23, 2001 and adopted on April 3, 2001.

(b) The following air pollution control districts submitted negative declarations for oxides of nitrogen source categories to satisfy the requirements of section 182 of the Clean Air Act, as amended. The following negative declarations are approved as additional information to the State Implementation Plan.

(1) Sacramento Metropolitan Air Quality Management District.

(i) Nitric and Adipic Acid Manufacturing Plants, Utility Boilers, Cement Manufacturing Plants, Glass Manufacturing Plants, and Iron and Steel Manufacturing Plants were submitted on March 4, 1996, and adopted on August 3, 1995.

(2) San Joaquin Valley Unified Air Pollution Control District.

(i) Nitric and Adipic Acid Manufacturing Plants, Cement Manufacturing Plants, Asphalt Batch Plants, Iron and Steel Manufacturing Plants, and Driers were submitted on October 17, 1994 and adopted on September 14, 1994.

(3) Placer County Air Pollution Control District.

(i) Nitric and Adipic Acid Manufacturing Plants, Utility Boilers, Cement Manufacturing Plants, Glass Manufacturing Plants, and Iron and Steel Manufacturing Plants were submitted on February 25, 1998 and adopted on October 9, 1997.

(4) Antelope Valley Air Pollution Control District.

(i) Boilers and Process Heaters In Petroleum Refineries submitted on May 13, 1999 and adopted on April 21, 1998.

(ii) Cement Kilns and Glass Melting Furnaces submitted on July 23, 1999 and adopted on March 16, 1999.

(iii) Nitric Acid Units submitted on March 28, 2000 and adopted on January 18, 2000.

[60 FR 47076, Sept. 11, 1995 as amended at 61 FR 56474, 56476, Nov. 1, 1996; 62 FR 40937, July 31, 1997; 62 FR 43647, Aug. 15, 1997; 63 FR 50766, 50769, Sept. 23, 1998; 65 FR 31270, May 17, 2000; 65 FR 66177, Nov. 3, 2000; 66 FR 44978, Aug. 27, 2001; 67 FR 54741, Aug. 26, 2002]

§ 52.223 Approval status.

(a) With the exceptions set forth in this subpart, the Administrator approves California's plan for the attainment and maintenance of the national standards under section 110 of the Clean Air Act.

(b) With the exceptions set forth in this subpart, the Administrator approves the plan with respect to Part D, Title I of the Clean Air Act, as amended in 1977, for the nonattainment areas listed in this paragraph. In addition, continued satisfaction of the requirements of Part D for the ozone portion of the State Implementation Plan (SIP) depends on the adoption and submittal of reasonably available control technology (RACT) requirements by July 1, 1980, for sources covered by Control Technique Guidelines (CTGs) issued between January 1978 and January 1979 and adoption and submittal by each subsequent January of additional RACT requirements for sources covered by CTGs issued by the previous January.

(1) Imperial County for O_3.

(2) North Central Coast Air Basin for O_3.

(3) South Coast Air Basin for O_3, CO, NO_2, and PM.

(4) San Diego Air Basin for O_3, CO, and TSP.

(5) San Joaquin Valley Air Basin.

(i) Kern County nonattainment area for ozone, CO, SO_2, and PM.

(ii) Kings County for O_3 and TSP.

(iii) Madera County for O_3 and TSP.

(iv) Merced County for O_3 and TSP.

(v) San Joaquin County for CO, O_3 and TSP.

(vi) Stanislaus County for CO, O_3 and TSP.

(vii) Tulare County for O_3 and TSP.

(viii) Fresno County for O_3, CO, and TSP.

(6) South Central Coast Air Basin.

(i) Santa Barbara County nonattainment area for O_3, CO and TSP.

(ii) Ventura County for O_3, CO and TSP.

(7) Sacramento Valley Air Basin.

(i) Butte County for O_3 and CO.

(ii) Sutter County for O_3.

(iii) Yuba County for O_3.

(iv) Sacramento AQMA for O_3.

(v) Sacramento County Metropolitan Area for CO.

(8) Southeast Desert Air Basin.

(i) Los Angeles County for Ozone.

(ii) San Bernardino County for Ozone.

(iii) Riverside County for Ozone.

(9) San Francisco Bay Area Air Basin for O_3, CO and TSP.

(10) Mountain Counties Air Basin.

(i) El Dorado County (Mountain Counties Air Basin portion) for O_3.

(ii) Placer County (Mid-County portion) for O_3.

(c) [Reserved]

(d) With the exceptions set forth in this subpart, the Administrator approves the plan with respect to Part D, Title I of the Clean Air Act, as amended in 1977, for the nonattainment areas listed in this paragraph.

(1) Lake Tahoe Basin for CO.

(2) EPA approves the CO plan for the Lake Tahoe Basin as meeting the requirements of Part D. This approval includes the resolution of the Lake Tahoe Regional Planning Agency banning new source construction pending the adoption of a new regional plan and ordinances. However, EPA disapproves the plan for any future time during which the Tahoe Regional Planning Agency may remove its construction ban prior to EPA approval of the new regional plan and ordinances.

(e) The Administrator approves the following portions of the 1999 Ozone Attainment Plan for the San Francisco Bay Area submitted by the California Air Resources Board on August 13, 1999: the 1995 baseline emissions inventory, the reasonable further progress demonstration, and the deletion of transportation control measures #6 and #16.

[45 FR 74484, Nov. 11, 1980]

EDITORIAL NOTE: For FEDERAL REGISTER citations affecting § 52.223, see the List of CFR Sections Affected, which appears in the Finding Aids section of the printed volume and on GPO Access.

§ 52.224 General requirements.

(a) The requirements of § 51.116(c) of this chapter are not met except in certain Air Pollution Control Districts (APCD) as indicated in this paragraph since the plan does not provide procedures by which emission data, as correlated with applicable emission limitations, will be made available to the public.

(1) The following APCD's meet the requirements of § 51.116(c) of this chapter:

(i) Siskiyou County APCD.
(ii) San Diego County APCD.
(iii) Great Basin Unified APCD.
(iv) Del Norte County APCD.
(v) Humboldt County APCD.
(vi) Mendocino County APCD.
(vii) Northern Sonoma County APCD.
(viii) Trinity County APCD.
(ix) Amador County APCD.

(2) The following APCD's do not provide for the correlation of emission data with applicable emission limitations as required by § 51.116(c) of this chapter. In these APCD's, only the requirements of § 52.224(b)(4) are in effect:

(i) Merced County APCD.
(ii) Stanislaus County APCD.
(iii) Fresno County APCD.
(iv) Calaveras County APCD.
(v) Tuolumne County APCD.
(vi) San Joaquin County APCD.
(vii) Mariposa County APCD.
(viii) Tulare County APCD.
(ix) Kern County APCD.
(x) Madera County APCD.
(xi) Yolo-Solano APCD.
(xii) Sutter County APCD.
(xiii) Glenn County APCD.
(xiv) Tehama County APCD.
(xv) Sierra County APCD.
(xvi) Shasta County APCD.
(xvii) Sacramento County APCD.
(xviii)–(xix) [Reserved]
(xx) Lake County APCD.
(xxi) Imperial County APCD.
(xxii) [Reserved]
(xxiii) Ventura County APCD.
(xxiv) Monterey Bay Unified APCD.
(xxv) [Reserved]
(xxvi) San Luis Obispo County APCD.
(xxvii) Kings County APCD.
(xxviii) Plumas County APCD.
(xxix) Nevada County APCD.

(b) *Regulation for public availability of emission data.* (1) Any person who cannot obtain emission data from the Agency responsible for making emission data available to the public, as specified in the applicable plan, except for those APCD's specified in paragraph (a) of this section, concerning emissions from any source subject to emission limitations which are part of the approved plan may request that the appropriate Regional Administrator obtain and make public such data. Within 30 days after receipt of any such written request, the Regional Administrator shall require the owner or operator of any such source to submit information within 30 days on the nature and amounts of emissions from such source and any other information as may be deemed necessary by the Regional Administrator to determine whether such source is in compliance with applicable emission limitations or other control measures that are part of the applicable plan.

(2) Commencing after the initial notification by the Regional Administrator pursuant to paragraph (b)(1) of this section, the owner or operator of the source shall maintain records of the nature and amounts of emissions from such source and any other information as may be deemed necessary by the Regional Administrator to determine whether such source is in compliance with applicable emission limitations or other control measures that are part of the plan. The information recorded shall be summarized and reported to the Regional Administrator, on forms furnished by the Regional Administrator, and shall be submitted within 45 days after the end of the reporting period. Reporting periods are January 1 to June 30 and July 1 to December 31.

(3) Information recorded by the owner or operator and copies of this summarizing report submitted to the Regional Administrator shall be retained by the owner or operator for 2 years after the date on which the pertinent report is submitted.

(4) Emission data obtained from owners or operators of stationary sources

will be correlated with applicable emission limitations and other control measures that are part of the applicable plan and will be available at the appropriate regional office and at other locations in the state designated by the Regional Administrator.

(c) The deletion of the following rules or portions of rules is disapproved, since these regulations are necessary to fulfill the requirements of 40 CFR 51.116(c).

(1) Northcoast intrastate region:

(i) Lake County APCD.

(A) Section 49a, *Public Records,* and Section 49b, *Record,* of Part III, *Definitions;* and Part II, *Authorization and Disclosure,* submitted on October 23, 1974 and previously approved under 40 CFR 52.223, are retained.

[40 FR 55328, Nov. 28, 1975]

EDITORIAL NOTE: For FEDERAL REGISTER citations affecting § 52.224, see the List of CFR Sections Affected, which appears in the Finding Aids section of the printed volume and on GPO Access.

§ 52.225 Legal authority.

(a) The requirements of § 51.230(c) of this chapter are not met since the State Emergency Services Act does not apply to air pollution emergencies in a manner comparable to section 303 of the Clean Air Act, as amended.

(b) The requirements of § 51.230(f) of this chapter are not met since authority to make emission data available to the public inadequate. Such release is precluded under certain circumstances.

[37 FR 10852, May 31, 1972, as amended at 51 FR 40676, Nov. 7, 1986]

§ 52.226 Control strategy and regulations: Particulate matter, San Joaquin Valley and Mountain Counties Intrastate Regions.

(a) [Reserved]

(b) The following regulatory changes represent a relaxation of previously submitted regulations and an adequate control strategy has not been submitted showing that the relaxation will not interfere with attainment and maintenance of the National Ambient Air Quality Standards for particulate matter:

(1) Kings County APCD.

(i) Rule 405, Process Weight, submitted on July 25, 1973 is disapproved; and Rule 405, submitted on June 30, 1972, and previously approved in 40 CFR 52.223 is retained.

(ii) Rule 407.1, *Disposal of Solid and Liquid Wastes,* submitted on November 4, 1977, is disapproved; and Rule 407.1, *Disposal of Solid and Liquid Wastes,* submitted on June 30, 1972, and previously approved under 40 CFR 52.223 is retained.

(2) Calaveras County APCD.

(i) The revocation of Rule 407(b), Combustion Contaminants, is disapproved; and Rule 407(b), submitted on June 30, 1972, and previously approved in 40 CFR 52.223 is retained.

(ii) The revocation of Rule 408, Fuel Burning Equipment, is disapproved; and Rule 408, submitted on June 30, 1972, and previously approved in 40 CFR 52.223 is retained.

(iii) The addition of Rule 209, Fossil Fuel-Steam Generator Facility, is disapproved; and Rule 408, submitted on June 30, 1972 and previously approved in 40 CFR 52.223 is retained.

(3) Tuolumne County APCD.

(i) Rule 207, Particulate Matter, submitted on July 22, 1975, is disapproved; and Rules 404 and 407(b), submitted on June 30, 1972 and previously approved in 40 CFR 52.223 are retained.

(ii) Rule 209, Fossil Fuel-Steam Generator Facility, submitted on July 22, 1975, is disapproved; and Rule 408, submitted on June 30, 1972, and previously approved in 40 CFR 52.223 is retained.

(iii) Rule 207, Particulate Matter, submitted on February 10, 1977, is disapproved and the previously approved Rules 404 and 407(b), submitted on June 30, 1972, remain in effect.

(iv) Rule 209, Fossil Fuel-Steam Generator Facility, submitted on February 10, 1977, is disapproved and the previously approved Rule 408, submitted on June 30, 1972, remains in effect.

(4) Fresno County APCD.

(i) Rule 407, Disposal of Solid or Liquid Wastes, submitted on February 10, 1976, is disapproved; and Rule 407.1, submitted on June 30, 1972, and previously approved in 40 CFR 52.223 is retained.

(ii) Rule 407, Disposal of Solid or Liquid Wastes, submitted on November 10, 1976, is disapproved; and Rule 407.1, submitted on June 30, 1972 and previously approved in 40 CFR 52.223 is retained.

(5) San Joaquin County APCD.

(i) Rule 407.1, Disposal of Solid or Liquid Wastes, submitted on February 10, 1976, is disapproved; and Rule 407.1, submitted on June 30, 1972 and previously approved in 40 CFR 52.223 is retained.

(6) Mariposa County APCD.

(i) Rule 209, Fossil Fuel-Steam Generator Facility, submitted on January 10, 1975, is disapproved; and Rule 6.4, submitted on June 30, 1972 and previously approved in 40 CFR 52.223 is retained.

(7) Kern County APCD.

(i) Rule 407.1, Disposal of Solid or Liquid Wastes, submitted on July 22, 1975, is disapproved; and Rule 407.1, submitted on June 30, 1972 and previously approved in 40 CFR 52.223 is retained.

(8) Madera County APCD.

(i) Rule 405, Process Weight, submitted on January 10, 1975 is disapproved; and Rule 405, submitted on June 30, 1972 and previously approved in 40 CFR 52.223 is retained.

(9) Tulare County APCD.

(i) Paragraph b. of Rule 407.1.

(10) Merced County APCD.

(i) Rule 407.1, Disposal of Solid or Liquid Wastes, submitted on August 2, 1976 is disapproved; and Rule 407.1 submitted on June 30, 1972 and previously approved in 40 CFR 52.223 is retained.

[37 FR 10850, May 31, 1972]

EDITORIAL NOTE: For FEDERAL REGISTER citations affecting § 52.226, see the List of CFR Sections Affected, which appears in the Finding Aids section of the printed volume and on GPO Access.

§ 52.227 Control strategy and regulations: Particulate matter, Metropolitan Los Angeles Intrastate Region.

(a) The requirements of Subpart G of this chapter are not met since the plan does not provide for attainment and maintenance of the secondary standards for particulate matter in the Metropolitan Los Angeles Intrastate Region.

(b) The following regulations are disapproved since they are not part of the approved control strategy and do not provide for the degree of control needed for the attainment and maintenance of the primary standards for particulate matter in the Metropolitan Los Angeles Intrastate Region.

(1) Los Angeles County Air Pollution Control District:

(i) Regulation IV, Rule 68.1.

(2) Riverside County Air Pollution Control District:

(i) Regulation IV, Rule 54 for process sources with a process weight rate in excess of 62,000 lbs. per hour. Rule 54 is approved for process sources with a process weight of 62,000 lbs. per hour or less.

(3) Southern California APCD:

(i) Regulation IV, Rule 404 Particulate Matter—Concentration, submitted on August 2, 1976.

(ii) Regulation IV, Rule 473 Disposal of Solid and Liquid Wastes, submitted on August 2, 1976.

(4) South Coast AQMD.

(i) Rule 401(b) submitted on August 15, 1980.

(c) The rescission by the Southern California APCD of the following rules, which were previously approved in the May 31, 1972 (37 FR 10850) and September 22, 1972 (37 FR 19813) FEDERAL REGISTER issues, is disapproved since adequate replacementrules have not been submitted and no analysis has been presented to show that this rescission will not interfere with the attainment and maintenance of the NAAQS for particulate matter as required by section 110 of the Clean Air Act. In addition, the following rules, as submitted in June 1972 and approved for the SIP, remain federally enforceable:

(1) Los Angeles County APCD.

(i) Regulation IV, Rule 52 Particulate Matter—Concentration.

(ii) Regulation IV, Rule 58 Disposal of Solid and Liquid Wastes.

(2) San Bernardino County APCD.

(i) Regulation IV, Rule 52A Particulate Matter—Concentration.

(ii) Regulation IV, Rule 58A Disposal of Solid and Liquid Wastes.

(3) Riverside County APCD.

(i) Regulation IV, Rule 52 Particulate Matter—Concentration.

(ii) Regulation IV, Rule 58 Disposal of Solid and Liquid Wastes.

(4) Orange County APCD.

(i) Regulation IV, Rule 52 Particulate Matter—Concentration.

(ii) Regulation IV, Rule 58 Disposal of Solid and Liquid Wastes.

[37 FR 10850, May 31, 1972, as amended at 37 FR 19813, Sept. 22, 1972; 43 FR 25687, June 14, 1978; 49 FR 18824, May 3, 1984; 51 FR 40676, Nov. 7, 1986]

§ 52.228 Regulations: Particulate matter, Southeast Desert Intrastate Region.

(a) The following regulations are disapproved since they are not part of the approved control strategy and do not provide for the degree of control needed for the attainment and maintenance of the national standards for particulate matter in the Southeast Desert Intrastate Region.

(1) Imperial County Air Pollution Control District:

(i) Rule 114A.

(ii) Rule 116B.

(2) Los Angeles County Air Pollution Control District:

(i) Regulation IV, Rule 68.1.

(3) Riverside County Air Pollution Control District:

(i) Regulation IV, Rule 54 for process sources with a process weight rate in excess of 160,000 lbs. per hour. Rule 54 is approved for process sources with a process weight of 160,000 lbs. per hour or less.

(b) The following regulatory changes represent a relaxation of previously submitted regulations, and an adequate control strategy has not been submitted showing that the relaxation will not interfere with the attainment and maintenance of the national ambient air quality standards for particulate matter:

(1) Southeast Desert Intrastate Region:

(i) Imperial County APCD.

(A) Rule 406, Disposal of Solid and Liquid Wastes submitted on November 4, 1977 is disapproved; and Rule 116 C, Specific Contaminants submitted on June 30, 1972 and previously approved under 40 CFR 52.223 is retained.

(ii) Los Angeles County Air Pollution Control District.

(A) Regulation IV, Rule 404 Particulate Matter-Concentration, and Rule 473, Disposal of Solid and Liquid Wastes, submitted on June 6, 1977 are disapproved. Rules 52 and 58, titled as above, respectively, and submitted on June 30, 1972 and previouslyapproved under 40 CFR 52.223 are retained.

(iii) Riverside County Air Pollution Control District.

(A) Regulation IV, Rules 404 Particulate Matter-Concentration, 405 Particulate Matter-Weight, and Rule 473, Disposal of Solid and Liquid Wastes, submitted on June 6, 1977 are disapproved. Rules 52, Particulate Matter-Weight, 54, Dust and Fumes, and 58, Disposal of Solid and Liquid Wastes, submitted in 1972 and approved under 40 CFR 52.223, are retained.

[37 FR 10850, May 31, 1972, as amended at 37 FR 19813, Sept. 22, 1972; 43 FR 35695, Aug. 11, 1978; 43 FR 40014, Sept. 8, 1978; 64 FR 49400, Sept. 13, 1999]

§ 52.229 Control strategy and regulations: Photochemical oxidants (hydrocarbons), Metropolitan Los Angeles Intrastate Region.

(a) [Reserved]

(b) The following rules are disapproved because they would result in a relaxation of control requirements contained in the presently approved State Implementation Plan, and no analysis has been presented to show that this relaxation will not interfere with the attainment and maintenance of NAAQS for photochemical oxidants (hydrocarbons) as required by section 110 of the Clean Air Act.

(1) Southern California APCD.

(i) Regulation IV, Rule 465 Vacuum Producing Devices or Systems, submitted on August 2, 1976.

(2) South Coast Air Quality Management District.

(i) Regulation IV, Rule 461 Gasoline Transfer and Dispensing, submitted on June 6, 1977. The version of this rule by the same number and title submitted on April 21, 1976 and approved under 40 CFR 52.223 is retained.

(ii) Rule 1115, Automotive Coatings, adopted on March 16, 1984 by the District and submitted by the state to EPA on July 10, 1984.

(iii) Rule 1113, Architectural Coatings, adopted on August 2, 1985 and submitted to EPA on November 12, 1985. The version of this rule by the same number and title submitted on July 10, 1984 and approved by EPA on January 24, 1985 is retained.

(c) The rescission by the Southern California APCD of the following rules, which were previously approved in the September 22, 1972 (37 FR 19813) FEDERAL REGISTER issue, is disapproved since adequate replacement rules have not been submitted anderfere with the attainment and maintenance of the NAAQS for photochemical oxidants (hydrocarbons) as required by section 110 of the Clean Air Act. In addition, the following rules, as submitted in June 1972 and approved for the SIP, remain federally enforceable:

(1) Los Angeles County APCD, Regulation IV, Rule 69, Vacuum Producing Devices or Systems.

(2) San Bernardino County APCD, Regulation IV, Rule 69, Vacuum Producing Devices or Systems.

(3) Riverside County APCD, Regulation IV, Rule 74, Vacuum Producing Devices or Systems.

(4) Orange County APCD, Regulation IV, Rule 69, Vacuum Producing Devices or Systems.

[37 FR 10850, May 31, 1972, as amended at 43 FR 25687, June 14, 1978; 43 FR 40014, Sept. 8, 1978; 46 FR 5978, Jan. 21, 1981; 54 FR 5237, Feb. 2, 1989; 54 FR 34515, Aug. 21, 1989]

§ 52.230 Control strategy and regulations: Nitrogen dioxide.

(a) The requirements of § 52.14(c)(3) of this chapter as of September 22, 1972 (47 FR 1983), are not met since the plan does not provide for the degree of nitrogen oxides emission reduction attainable through application of reasonably available control technology in the Metropolitan Los Angeles Intrastate Region. Therefore, Rule 68.b of the Orange County Air Pollution Control District is disapproved.

(b) The following rules are disapproved since they are not part of the approved control strategy and do not provide for the degree of control necessary for the attainment and maintenance of NAAQS for nitrogen dioxide in the Metropolitan Los Angeles Intrastate AQCR:

(1) Orange County APCD, Regulation IV, Rule 474, Fuel Burning Equipment—Oxides of Nitrogen, submitted on February 10, 1977.

(c) The rescission by the Southern California APCD of the following rules is disapproved since adequate replacement rules have not been submitted and no analysis has been presented to show that this rescission will not interfere with the attainment and maintenance of the National Ambient Air Quality Standards as required by section 110 of the Clean Air Act. In addition, the following rules, as submitted in June 1972 and approved for the SIP, remain federally enforceable:

(1) Orange County APCD, Regulation IV, Rule 68, Fuel Burning Equipment—NOx.

(2) Orange County APCD, Regulation IV, Rule 67.1, Fuel Burning Equipment.

[43 FR 25687, June 14, 1978, as amended at 46 FR 3884, Jan. 16, 1981; 51 FR 40677, Nov. 7, 1986]

§ 52.231 Regulations: Sulfur oxides.

(a) [Reserved]

(b) The deletion of the following rules or portions of rules is disapproved, since an adequate control strategy demonstration has not been submitted indicating that the deletions of the control requirements contained in those rules would not interfere with the attainment or maintenance of the National Ambient Air Quality Standard for Sulfur Oxides.

(1) Lake County Intrastate Region.

(i) Lake County, APCD.

(A) Section 3(F), *Sulfur* of Part V, *Prohibitions and Standards,* submitted on October 23, 1974 and previously approved under 40 CFR 52.223, is retained as applicable to sources other than sulfur recovery units.

[43 FR 34464, 34466, Aug. 4, 1978, as amended at 46 FR 3884, Jan. 16, 1981; 46 FR 42461, Aug. 21, 1981]

§ 52.232 Part D conditional approval.

(a) The following portions of the California SIP contain deficiencies with respect to Part D of the Clean Air Act which must be corrected by meeting the indicated conditions of Part D plan approval.

(1) Imperial County for ozone.

(i) By May 7, 1981, the NSR rules must be revised and submitted as an SIP revision. The rules must satisfy section 173 and 40 CFR Subpart I, "Review of new sources and modifications."

In revising the Imperial County APCD's NSR rules, the State/APCD

must address (A) any new requirements in EPA's amended regulations for NSR under section 173 of the Clean Air Act (August 7, 1980, 45 FR 52676) which the APCD rules do not now satisfy and (B) those deficiencies cited in EPA's Evaluation Report Addendum (contained in Document File NAP–CA–06 at the EPA Library in Washington, DC and the Region IX office).

(ii) By January 1, 1981, a cutback asphalt rule which reflects reasonably available control technology (RACT) must be submitted as an SIP revision.

(2) North Central Coast Air Basin for ozone.

(i) By May 7, 1981, the NSR rules must be revised and submitted as an SIP revision. The rules must satisfy section 173 and 40 CFR 51.18, "Review of new sources and modifications." In revising the Monterey Bay Unified APCD's NSR rules, the State/APCD must address (*a*) any new requirements in EPA's amended regulations for NSR under section 173 of the Clean Air Act (August 7, 1980, 45 FR 52676) which the APCD rules do not now satisfy and (*b*) those deficiencies with respect to the September 5, 1979 notice cited in EPA's Evaluation Report Addendum (contained in Document File NAP–CA–14 at the EPA Library in Washington, DC and the Region IX office).

(ii) By March 4, 1981, one of the following must be submitted as an SIP revision: (*a*) Adequate justification that the cutback asphalt rule represents RACT, (*b*) amendment of the cutback asphalt rule to conform with the controls recommended in the CTG document for cutback asphalt, or (*c*) adequate documentation that the cutback asphalt rule will result in emission reductions which are within 5 percent of the reductions achievable with the controls recommended in the cutback asphalt CTG document.

(3) South Coast Air Basin.

(i)(A) By May 7, 1981, the NSR rules must be revised and submitted as an SIP revision. The rules must satisfy section 173 of the Clean Air Act and 40 CFR 51.18, "Review of new sources and modifications." In revising the South Coast AQMD's NSR rules, the State/AQMD must address (*1*) any new requirements in EPA's amended regulations for NSR (45 FR 31307, May 13, 1980 and 45 FR 52676, August 7, 1980) which the AQMD rules do not currently satisfy and (*2*) those deficiencies cited in EPA's Evaluation Report Addendum which still apply despite EPA's new NSR requirements (contained in Document File NAP–CA–9 at the EPA Library in Washington, DC and the Regional Office).

(4) San Diego Air Basin.

(i) For ozone, CO, TSP, and NO_2≦

(A) By May 7, 1981, the NSR rules submitted on March 17, 1980 must be revised and submitted as an SIP revision. In revising the NSR rules, the State/APCD must address (*1*) any new requirements in EPA's amended regulations for NSR under section 173 of the Clean Air Act (May 13, 1980, 45 FR 31307; and August 7, 1980, 45 FR 52676) which the APCD rules do not currently satisfy and (*2*) the deficiencies cited in EPA's *Evaluation Report Addendum* which still apply despite EPA's new NSR requirements. The *Evaluation Report Addendum* is contained in document file NAP–CA–19 and available at the EPA Region IX Office and the EPA Library in Washington, DC

(5) The Kern County APCD.

(i) For ozone, CO, and PM:

(A) By November 19, 1981, the NSR rules must be revised and submitted as an SIP revision. The rules must satisfy section 173 of the Clean Air Act and 40 CFR Subpart I, "Review of new sources and modification." In revising Kern County's NSR rules, the State/APCD must address all the requirements in EPA's amended regulations for NSR (45 FR 31307, May 13, 1980 and 45 FR 52676, August 7, 1980) which the APCD rules do not currently satisfy including those deficiencies cited in EPA's Evaluation Report Addendum which still apply despite EPA's new NSR requirements (contained in Document File NAP–CA–07 at the EPA Library in Washington, DC and the Regional Office).

(ii) [Reserved]

(6) The San Joaquin Valley Air Basin Nonattainment Area.

(i) For O_3, PM and CO in San Joaquin County.

(A) By October 30, 1985 the NSR rules must be revised to meet the requirements in EPA's amended regulations for NSR under section 173 of the Clean

Air Act (May 13, 1980 (45 FR 31307) and August 7, 1980 (45 FR 52676)) and submitted as a SIP revision.

(7) San Francisco Bay Area Air Basin.

(i) For ozone and CO:

(A) By June 17, 1982, submittal of implementation commitments and schedules and additional commitments to provide annually the financial and personnel resources necessary to carry out the plan for transportation sources.

(8) [Reserved]

(9) The Santa Barbara County nonattainment areas.

(i) For O_3, TSP, and CO by (90 days from the date of publication of this notice).

(A) The new source review (NSR) rules must be revised to meet the requirements in EPA's amended regulations for NSR under section 173 of the Clean Air Act (45 FR 31307, May 13, 1980 and 45 FR 52676, August 7, 1980) and submitted as an SIP revision.

(ii) For O_3 by (90 days from the date of publication of this notice), a revised cutback asphalt paving materials rule which does not allow for indefinite compliance date extensions and submitted as an SIP revision.

(10) Kings, Madera, Merced, Stanislaus and Tulare County APCDs.

(i) For O_3 and PM [and CO in Stanislaus County].

(A) By September 7, 1982 the NSR rules must be revised to meet the requirements in EPA's amended regulations for NSR under section 173 of the Clean Air Act (May 13, 1980, 45 FR 31307 and August 7, 1980, 45 FR 52676) as an SIP revision.

(11) Fresno County and Ventura County nonattainment areas.

(i) For ozone, CO (for Fresno County), and PM:

(A) By November 1, 1982, the NSR rules must be revised to meet the requirements in EPA's amended regulations for NSR under section 173 of the Clean Air Act (May 13, 1980 (45 FR 31307), August 7, 1980 (45 FR 52676), and October 14, 1981 (46 FR 50766)).

(12) Butte, Sutter and Yuba County APCDs.

(i) For Ozone:

(A) By August 2, 1982, the NSR rules for the counties discussed in this notice must be revised to meet the requirements in EPA's amended regulations for NSR under section 173 of the Clean Air Act (May 13, 1980, 45 FR 31307 and August 7, 1980, 45 FR 52676).

(13) Los Angeles and Riverside portions of the Southeast Desert Air Basin.

(i) For Ozone:

(A) By August 9, 1982, the new source review rules for the three county areas must be revised to meet the requirements in EPA's amended regulations under section 173 (May 13, 1980, (45 FR 31307), August 7, 1980, (45 FR 52676), and October 14, 1981, (46 FR 50766)).

(B) By August 9, 1982, the State must provide adopted regulations for degreasing operations in the Los Angeles County portion of the SEDAB which represent RACT.

(14)–(15) [Reserved]

(16) San Bernardino County portion of the Southeast Desert Air Basin.

(i) For ozone:

(A) By October 30, 1985, the NSR rules must be revised to meet the requirements in EPA's amended regulations for NSR under section 173 of the Clean Air Act (May 13, 1980 (45 FR 31307), August 7, 1980 (45 FR 52676), and October 14, 1981 (46 FR 50766)).

(17) Yolo and Solano Counties.

(i) For ozone and CO in those portions of Yolo and Solano Counties that are part of the Sacramento Metropolitan Area:

(A) By October 30, 1985, the NSR rules must be revised to meet the requirements in EPA's amended regulations for NSR under section 173 of the Clean Air Act (May 13, 1980 (45 FR 31307), August 7, 1980 (45 FR 52676), and October 14, 1981 (46 FR 50766)).

(ii) For ozone:

By November 1, 1982, the State must provide either (A) an adequate demonstration that the following regulations represent RACT, (B) amend the regulations so that they are consistent with the CTG, or (C) demonstrate that the regulations will result in VOC emission reductions which are within five percent of the reductions which would be achieved through the implementation of the CTG recommendations:

Yolo-Solano County APCD

Rule 2.24, "Solvent Cleaning Operations (Degreasing)."

[45 FR 74485, Nov. 10, 1980]

EDITORIAL NOTE: For FEDERAL REGISTER citations affecting § 52.232, see the List of CFR Sections Affected, which appears in the Finding Aids section of the printed volume and on GPO Access.

§ 52.233 Review of new sources and modifications.

(a) The following regulations are disapproved because they are not consistent with Clean Air Act requirements.

(1) Imperial County APCD.

(i) Subparagraph C.5. of Rule 207, *Standards for Permit to Construct*, submitted March 17, 1980.

(2) Monterey Bay Unified APCD.

(i) Subparagraph B.5. of Rule 207, *Standards for Permit to Construct*, submitted March 17, 1980.

(3) South Coast AQMD.

(i) In Rule 1306(a)(i), submitted on April 3, 1980, sentence 3 is disapproved.

(ii) In Rule 1306(d)(1)(B)(ii), submitted on April 3, 1980, the following portion of the rule is disapproved: "Which have occurred during the highest three years of the last five year period, divided by three, provided the applicant demonstrates that such permit units have been operated at least 90 days during each of such three years."

(iii) In Rule 1307(a) submitted on April 3, 1980, the following portion of the rule is disapproved: "Greater than 68 kilograms (150 pounds) per day except carbon monoxide, for which the value is an increase greater than 340 kilograms (750 pounds) per day."

(4) Kern County APCD.

(i) Those portions of paragraph (3)(E) of Rule 210.1, submitted on April 15, 1980, which allow new sources and modifications to be exempt from LAER.

(b) [Reserved]

(c) The requirements of § 51.160(a) of this chapter are not met in the following Air Pollution Control Districts since the regulations of the APCD's do not provide the means to prevent construction of sources which would violate applicable portions of the control strategy or would interfere with the attainment or maintenance of a national standard.

(1) Mariposa County APCD.

(2) Santa Barbara County APCD.

(d) The requirements of § 51.160(a) of this chapter are not met in the following Air Pollution Control Districts since the regulations of the APCD's do not include a means to prevent construction or modification if such construction or modification would interfere with the attainment or maintenance of a national standard.

(1) Amador County APCD.

(2) Calaveras County APCD.

(3) El Dorado County APCD (Mountain Counties Intrastate portion).

(4) [Reserved]

(5) Glenn County APCD.

(6) Humboldt County APCD.

(7)–(8) [Reserved]

(9) Lake County APCD.

(10) Lassen County APCD.

(11) [Reserved]

(12) Mendocino County APCD.

(13) [Reserved]

(14) Modoc County APCD.

(15) Monterey Bay Unified APCD.

(16) Nevada County APCD.

(17) Northern Sonoma County APCD.

(18) [Reserved]

(19) Plumas County APCD.

(20) [Reserved]

(21) Shasta County APCD.

(22) Sierra County APCD.

(23) Siskiyou County APCD.

(24) [Reserved]

(25) Sutter County APCD.

(26) [Reserved]

(27) Tuolumne County APCD.

(e) [Reserved]

(f) *Regulation for review of new sources and modifications.* (1) The requirements of this paragraph are applicable to:

(i) Any stationary source in the APCD's listed below, the construction or modification of which is commenced after the effective date of this regulation.

(*a*) Mariposa County APCD.

(*b*) [Reserved]

(*c*) Santa Barbara County APCD.

(ii) Any stationary source subject to the requirements of §§ 52.226(c), 52.227(c), 52.228(b), or 52.230(b), the construction or modification of which is commenced after the effective date of this regulation.

(2) No owner or operator shall commence construction or modification of

a stationary source after the effective date of this regulation without first obtaining approval from the Administrator of the location and design of such source.

(i) Application for approval to construct or modify shall be made on forms furnished by the Administrator, or by other means prescribed by the Administrator.

(ii) A separate application is required for each source.

(iii) Each application shall be signed by the applicant.

(iv) Each application shall be accompanied by site information, plans, descriptions, specifications, and drawings showing the design of the source, the nature and amount of emissions, and the manner in which it will be operated and controlled.

(v) Any additional information, plans, specifications, evidence, or documentation that the Administrator may require shall be furnished upon request.

(3) No approval to construct or modify will be granted unless the applicant shows to the satisfaction of the Administrator that:

(i) The source will be operated without causing a violation of any local, State, or Federal regulations which are part of the applicable plan.

(ii) The source will not prevent or interfere with attainment or maintenance of any national standard.

(4) (i) Within twenty (20) days after receipt of an application to construct, or any addition to such application, the Administrator shall advise the owner or operator of any deficiency in the information submitted in support of the application. In the event of such a deficiency, the date of receipt of the application for the purpose of paragraph (f)(4)(ii) of this section, shall be the date on which all required information is received by the Administrator.

(ii) Within thirty (30) days after receipt of a complete application, the Administrator shall:

(*a*) Make a preliminary determination whether the source should be approved, approved with conditions, or disapproved.

(*b*) Make available in at least one location in each region in which the proposed source would be constructed, a copy of all materials submitted by the owner or operator, a copy of the Administrator's preliminary determination and a copy or summary of other materials, if any, considered by the Administrator in making his preliminary determination; and

(*c*) Notify the public, by prominent advertisement in a newspaper of general circulation in each region in which the proposed source would be constructed, of the opportunity for written public comment on the information submitted by the owner or operator and the Administrator's preliminary determination on the approvability of the source.

(iii) A copy of the notice required pursuant to this paragraph shall be sent to the applicant and to state and local air pollution control agencies, having cognizance over the location where the source will be situated.

(iv) Public comments submitted in writing within thirty (30) days after the date such information is made available shall be considered by the Administrator in making his final decision on the application. No later than ten (10) days after the close of the public comment period, the applicant may submit a written response to any comment submitted by the public. The Administrator shall consider the applicant's response in making his final decision. All comments shall be made available for public inspection in at least one location in the region in which the source would be located.

(v) The Administrator shall take final action on the application within thirty (30) days after the close of the public comment period. The Administrator shall notify the applicant in writing of his approval, conditional approval, or denial of the application, and shall set forth his reasons for ocnditional approval or denial. Such notification shall be made available for public inspection in at least one location in the region in which the source would be located.

(vi) The Administrator may extend each of the time periods specified in paragraph (f)(4)(ii), (iv) or (v) of this section by no more than 30 days, or such other period as agreed to by the applicant and the Administrator.

(5) The Administrator may impose any reasonable conditions upon an approval, including conditions requiring the source to be provided with:

(i) Sampling ports of a size, number, and location as the Administrator may require,

(ii) Safe access to each port,

(iii) Instrumentation to monitor and record emission data, and

(iv) Any other sampling and testing facilities.

(6) The Administrator may cancel an approval if the construction is not begun within 2 years from the date of issuance, or if during the construction, work is suspended for 1 year.

(7) Any owner or operator subject to the provisions of this regulation shall furnish the Administrator written notification as follows:

(i) A notification of the anticipated date or initial startup of the source not more than 60 days or less than 30 days prior to such date.

(ii) A notification of the actual date of initial startup of the source within 15 days after such date.

(8) Within 60 days after achieving the maximum production rate at which the source will be operated but not later than 180 days after initial startup of such source the owner or operator of such source shall conduct a performance test(s) in accordance with methods and under operating conditions approved by the Administrator and furnish the Administrator a written report of the results of such performance test.

(i) Such test shall be at the expense of the owner or operator.

(ii) The Administrator may monitor such test and may also conduct performance tests.

(iii) The owner or operator of a source shall provide the Administrator 15 days prior notice of the performance test to afford the Administrator the opportunity to have an observer present.

(iv) The Administrator may waive the requirement for performance tests if the owner or operator of a source has demonstrated by other means to the Administrator's satisfaction that the source is being operated in compliance with all local, State and Federal regulations which are part of the applicable plan.

(9) Approval to construct or modify shall not be required for:

(i) The installation or alteration of an air pollutant detector, air pollutants recorder, combustion controller, or combustion shutoff.

(ii) Air-conditioning or ventilating systems not designed to remove air pollutants generated by or released from equipment.

(iii) Fuel burning equipment, other than smokehouse generators which has a heat input of not more than 250 MBtu/h (62.5 billion g-cal/h) and burns only gaseous fuel containing not more than 0.5 grain H_2S per 100 $stdft^3$ (5.7 g/100 $stdm^3$); has a heat input of not more than 1 MBtu/h (250 Mg-cal/h) and burns only distillate oil; or has a heat input of not more than 350,000 Btu/h (88.2 Mg-cal/h) and burns any other fuel.

(iv) Mobile internal combustion engines.

(v) Laboratory equipment used exclusively for chemical or physical analyses.

(vi) Other sources of minor significance specified by the Administrator.

(10) Approval to construct or modify shall not relieve any person of the responsibility to comply with any local, State, or Federal regulation which is part of the applicable plan.

(11) Any owner or operator who constructs, modifies, or operates a stationary source not in accordance with the application, as approved and conditioned by the Administrator, or any owner or operator of a stationary source subject to this paragraph who commences construction or modification without applying for any receiving approval hereunder, shall be subject to enforcement action under section 113 of the Act.

(g) *Regulation for review of new sources and modifications.* (1) The requirements of this paragraph are applicable to any stationary source in the APCD's listed below, the construction or modification of which is commenced after the effective date of this regulation.

(i) Amador County APCD.

(ii) Calaveras County APCD.

(iii) El Dorado County APCD (Mountain Counties Intrastate portion).

(iv) [Reserved]

(v) Glenn County APCD.
(vi) Humboldt County APCD.
(vii)–(viii) [Reserved]
(ix) Lassen County APCD.
(x) Madera County APCD.
(xi) Mendocino County APCD.
(xii) Merced County APCD.
(xiii) Modoc County APCD.
(xiv) Monterey Bay Unified APCD.
(xv) Nevada County APCD.
(xvi) [Reserved]
(xvii) Plumas County APCD.
(xviii) San Joaquin County APCD.
(xix) Shasta County APCD.
(xx) Sierra County APCD.
(xxi) Siskiyou County APCD.
(xxii) Stanislaus County APCD.
(xxiii) Sutter County APCD.
(xxiv) Tulare County APCD.
(xxv) Tuolumne County APCD.

(2) No owner or operator shall commence construction or modification of any new source after the effective date of this regulation without first obtaining approval from the Administrator of the location of such source.

(i) Application for approval to construct or modify shall be made on forms furnished by the Administrator, or by other means prescribed by the Administrator.

(ii) A separate application is required for each source.

(iii) Each application shall be signed by the applicant.

(iv) Each application shall be accompanied by site information, stack data, and the nature and amount of emissions. Such information shall be sufficient to enable the Administrator to make any determination pursuant to paragraph (g)(3) of this section.

(v) Any additional information, plans, specifications, evidence, or documentation that the Administrator may require shall be furnished upon request.

(3) No approval to construct or modify will be granted unless the applicant shows to the satisfaction of the Administrator that the source will not prevent or interfere with attainment or maintenance of any national standard.

(4) (i) Within twenty (20) days after receipt of an application to construct, or any addition to such application, the Administrator shall advise the owner or operator of any deficiency in the information submitted in support of the application. In the event of such a deficiency, the date of receipt of the application for the purpose of paragraph (g)(4)(ii) of this section, shall be the date on which all required information is received by the Administrator.

(ii) Within thirty (30) days after receipt of a complete application, the Administrator shall:

(*a*) Make a preliminary determination whether the source should be approved, approved with conditions, or disapproved.

(*b*) Make available in at least one location in each region in which the proposed source would be constructed, a copy of all materials submitted by the owner or operator, a copy of the Administrator's preliminary determination and a copy or summary of other materials, if any, considered by the Administrator in making his preliminary determination; and

(*c*) Notify the public, by prominent advertisement in a newspaper of general circulation in each region in which the proposed source would be constructed, of the opportunity for written public comment on the information submitted by the owner or operator and the Administrator's preliminary determination on the approvability of the source.

(iii) A copy of the notice required pursuant to this subparagraph shall be sent to the applicant and to state and local air pollution control agencies, having cognizance over the location where the source will be situated.

(iv) Public comments submitted in writing within thirty (30) days after the date such information is made available shall be considered by the Administrator in making his final decision on the application. No later than ten (10) days after the close of the public comment period, the applicant may submit a written response to any comment submitted by the public. The Administrator shall consider the applicant's response in making his final decision. All comments shall be made available for public inspection in at least one location in the region in which the source would be located.

(v) The Administrator shall take final action on an application within thirty (30) days after the close of the public comment period. The Administrator shall notify the applicant in

writing of his approval, conditional approval, or denial of the application, and shall set forth his reasons for conditional approval or denial. Such notification shall be made available for public inspection in at least one location in the region in which the source would be located.

(vi) The Administrator may extend each of the time periods specified in paragraph (g)(4) (ii), (iv) or (v) of this section by no more than 30 days, or such other period as agreed to by the applicant and the Administrator.

(5) The Administrator may cancel an approval if the construction is not begun within 2 years from the date of issuance, or if during the construction, work is suspended for 1 year.

(6) Approval to construct or modify shall not relieve any owner or operator of the responsibility to comply with any local, State, or Federal regulation which is part of the applicable plan.

(7) Approval to construct or modify shall not be required for:

(i) The installation or alteration of an air pollutant detector, air pollutants recorder, combustion controller, or combustion shutoff.

(ii) Air-conditioning or ventilating systems not designed to remove air pollutants generated by or released from equipment.

(iii) Fuel burning equipment, other than smokehouse generators, which has a heat input of not more than 250 MBtu/h (62.5 billion g-cal/h) and burns only gaseous fuel containing not more than 20.0 grain H_2S per 100 $stdft^3$ (54.8 g/100 $stdm^3$); has a heat input of not more than 1 MBtu/h (250 Mg-cal/h) and burns only distillate oil; or has a heat input of not more than 350,000 Btu/h (88.2 Mg-cal/h) and burns any other fuel.

(iv) Mobile internal combustion engines.

(v) Laboratory equipment used exclusively for chemical or physical analyses.

(vi) Other sources of minor significance specified by the Administrator.

(8) Any owner or operator who constructs, modifies, or operates a stationary source not in accordance with the application, as approved and conditioned by the Administrator, or any owner or operator of a stationary source subject to this paragraph who commences construction or modification without applying for and receiving approval hereunder, shall be subject to enforcement action under section 113 of the Act.

(h)–(i) [Reserved]

(j) *Delegation of authority*. (1) The Administrator shall have the authority to delegate responsibility for implementing the procedures for conducting source review pursuant to this section in accordance with paragraphs (j) (2), (3), and (4) of this section.

(2) Where the Administrator delegates the responsibility for implementing the procedures for conducting source review pursuant to this section to any Agency, other than a Regional Office of the Environmental Protection Agency, a copy of the notice pursuant to paragraphs (f)(4)(iii) and (g)(4)(iii) of this section shall be sent to the Administrator through the appropriate Regional Office.

(3) In accordance with Executive Order 11752, the Administrator's authority for implementing the procedures for conducting source review pursuant to this section shall not be delegated, other than to a Regional Office of the Environmental Protection Ands; except that, with respect to the latter category, where new or modified sources are constructed or operated on Federal lands pursuant to leasing or other Federal agreements, the Federal Land Manager may at his discretion, to the extent permissible under applicable statutes and regulations, require the lessee or permittee to be subject to new source review requirements which have been delegated to a state or local agency pursuant to this paragraph.

(4) The Administrator's authority for implementing the procedures for conducting source review pursuant to this section shall not be redelegated, other than to a Regional Office of the Environmental Protection Agency, for new or modified sources which are located in Indian reservations except where the State has assumed jurisdiction over such land under other laws, in which case the Administrator may delegate his authority to the States in accordance with paragraphs (j) (2), (3), and (4) of this section.

(k) *Conditions on steam production.* (1) Notwithstanding any provisions to the contrary in the California State Implementation Plan, the Watson petroleum refinery owned by Atlantic Richfield Company, located at 1801 East Sepulveda Boulevard, Carson, California, shall operate under the following conditions listed in paragraphs (k)(2) through (6) of this section.

(2) The total steam load comprised of the steam purchased from Watson Energy Systems and the amount generated by boilers #31, #32, #33, #42, #51, and #52 at the ARCO Watson Refinery shall not exceed 1,355,000 pounds per hour at 680 °F, 600 psig.

(3) Continuous written records of steam purchased from Watson Energy Systems and of the steam produced by boilers #31, #32, #42, #51, or #52 at the ARCO Watson Refinery, during receipt of steam from Watson Energy Systems, shall be maintained and made available for inspection by the EPA and the South Coast Air Quality Management District. These records shall be kept in terms of pounds per hour of steam at 680 °F, 600 psig.

(4) The steam purchased from the Watson Energy Systems facility shall be used as a "first-on, last-off" source of steam for the ARCO Watson Refinery, except for steam produced by waste heat or as part of the refining process, or as required to maintain fired boilers in service for emergency use.

(5) Any proposed changes in equipment or fuel that would increase the oil fired steam generating capacity or decrease oil fired steam generating efficiency of boilers #31, #32, #33, #42, #51, and #52 at the ARCO Watson Refinery must be reviewed and approved by the EPA prior to implementation of the proposed changes.

(6) ARCO shall maintain written records of oil consumption at boilers #31, #32, #33, #42, #51, and #52 during receipt of steam from Watson Energy Systems. These records shall be available for inspection by the South Coast Air Quality Management District and the EPA. The total oil consumption of these boilers shall not exceed a monthly average of 226,000 gallons per day when receiving steam from the Watson Energy systems plant at a rate of 350,000 pounds per hour. When receiving steam at a lower rate, ARCO shall be allowed to increase its boiler fuel oil consumption to achieve a total steam load not to exceed the limit of condition two (2).

(l) The following rules and regulations are disapproved because they do not meet the requirements of sections 110, 172, and 173 of the Clean Air Act, since they exempt certain source categories from the offset requirements of the Act:

(1) South Coast Air Quality Management District.

(i) Rule 1304(e), Resource Conservation and Energy Projects, submitted on April 3, 1980, but only with respect to projects whose application for a permit is complete after January 1, 1986,

(ii) Rule 1304(b)(2), Resource and Energy Conservation Projects, submitted on November 8, 1982, but only with respect to projects whose application for a permit is complete after January 1, 1986,

(m) Revised South Coast Regulation XIII, submitted on November 8, 1982, is not approved inasmuch as action on it is temporarily deferred.

[37 FR 19813, Sept. 22, 1972]

EDITORIAL NOTE: For FEDERAL REGISTER citations affecting § 52.233, see the List of CFR Sections Affected, which appears in the Finding Aids section of the printed volume and on GPO Access.

§ 52.234 Source surveillance.

(a) Except in the Air Pollution Control Districts (APCDs) listed in this paragraph, the requirements of § 51.211 of this chapter are not met since the plan does not provide for recordkeeping and periodic reporting of emission data by sources.

(1) Amador County APCD.
(2) Bay Area AQMD.
(3) Calaveras County APCD.
(4) Del Norte County APCD.
(5) El Dorado County APCD.
(6) Humboldt County APCD.
(7) Imperial County APCD.
(8) Lake County APCD.
(9) Mariposa County APCD.
(10) Mendocino County APCD.
(11) Nevada County APCD.
(12) Northern Sonoma County APCD.
(13) Placer County APCD.
(14) Plumas County APCD.
(15) Sierra County APCD.

(16) Trinity County APCD.
(17) Ventura County APCD.

(b) The requirements of § 51.212 of this chapter are not met since the plan does not adequately provide for periodic testing and inspection of stationary sources within the Bay Area Air Pollution Control District portion of the San Francisco Bay Area Intrastate Region.

(c) The requirements of § 51.212 of this chapter are not met since the system for detecting violations through enforcement of visible emission regulations and complaint handling is not adequately described.

(d) *Regulation for source recordkeeping and reporting.* (1) The owner or operator of any stationary source in the State of California, except for those APCD's specified in paragraph (a) of this section, shall, upon notification from the Administrator, maintain records of the nature and amounts of emissions from such source and/or any other information as may be deemed necessary by the Administrator to determine whether such source is in compliance with applicable emission limitations or other control measures.

(2) The information recorded shall be summarized and reported to the Administrator, on forms furnished by the Administrator, and shall be submitted within 45 days after the end of the reporting period. Reporting periods are January 1 to June 30 and July 1 to December 31, except that the initial reporting period shall commence on the date the Administrator issues notification of the recordkeeping requirements.

(3) Information recorded by the owner or operator and copies of the summarizing reports submitted to the Administrator shall be retained by the owner or operator for 2 years after the date on which the pertinent report is submitted.

(e) The requirements of § 51.214 of this chapter are not met in the following air pollution control districts (APCD's) since all of the applicable requirements of Appendix P of part 51 are not included in the district regulations.

(1) Amador County APCD.
(2) Bay Area AQMD
(3) Calaveras County APCD.
(4) El Dorado County APCD.
(5) Imperial County APCD.
(6) Kern County APCD.
(7) Kings County APCD.
(8) Los Angeles County APCD.
(9) Mariposa County APCD.
(10) Monterey Bay Unified APCD.
(11) Nevada County APCD.
(12) Placer County APCD.
(13) Plumas County APCD.
(14) San Bernardino County Desert APCD.
(15) San Diego County APCD.
(16) San Joaquin County APCD.
(17) San Luis Obispo County APCD.
(18) Santa Barbara County APCD.
(19) Sierra County APCD.
(20) South Coast AQMD.
(21) Stanislaus County APCD.
(22) Tulare County APCD.
(23) Ventura County APCD.

[37 FR 10850, May 31, 1972]

EDITORIAL NOTE: For FEDERAL REGISTER citations affecting § 52.234, see the List of CFR Sections Affected, which appears in the Finding Aids section of the printed volume and on GPO Access.

§ 52.235 Control strategy for ozone: Oxides of nitrogen.

EPA is approving an exemption request submitted by the Monterey Bay Unified Air Pollution Control District on April 26, 1994 for the Monterey Bay ozone nonattainment area from the NO_X RACT requirements contained in section 182(f) of the Clean Air Act. This approval exempts the area from implementing the oxides of nitrogen (NO_X) requirements for reasonably available control technology (RACT), new source review (NSR), the related requirements of general and transportation conformity regulations, and applicable inspection and maintenance (I/M). The exemption is based on ambient air monitoring data and lasts for only as long as the area's monitoring efforts continue to demonstrate attainment without NO_X reductions from major stationary sources.

[60 FR 20237, Apr. 25, 1995]

§ 52.236 Rules and regulations.

(a) Since the following Air Pollution Control District (APCD) rules do not define the term "agricultural operations," the rules are disapproved because they could render certain emission limitations rules unenforceable.

(1) Imperial County APCD.

(i) Rule 114.5, submitted on November 10, 1976.

(ii) Rule 148.D(3), submitted on November 10, 1976.

(b) The following Air Pollution Control District (APCD) rules are disapproved because they contain the term "agricultural operations" and/or the term "other equipment in agricultural operations," both of which are either undefined or inadequately defined, thus rendering certain emission control rules unenforceable:

(1) San Luis Obispo County APCD.

(i) Rules 401(B)(4) and 401(B)(6), submitted on November 10, 1976.

(2) Sacramento County APCD.

(i) Rule 7(b)(5), submitted on November 4, 1977.

(3) Glenn County APCD.

(i) Section 77(e), submitted on June 30, 1972, and previously approved under 40 CFR 52.223 (37 FR 19812).

(4) Mariposa County APCD.

(i) Rule 203(G), submitted on June 6, 1977.

(5) Kern County APCD.

(i) Rules 402(c) and 402(e), submitted on; November 10, 1976.

(6) Fresno County APCD.

(i) Rules 402(c) and 402(e), submitted on October 23, 1974.

(ii) Rules 402(c) and 402(e), submitted on June 30, 1972, and previously approved under 40 CFR 52.223 (37 FR 19812).

(7) Tulare County APCD.

(i) Section 402(c), submitted on November 10, 1976, and previously approved under 40 CFR 52.223 (42 FR 47556).

(8) Madera County APCD.

(i) Rules 402(c) and 402(e), submitted on January 10, 1975, and previously approved under 40 CFR 52.223 (42 FR 42219).

(9) Amador County APCD.

(i) Rules 203(G), submitted on October 15, 1979, and 205(G), submitted on June 30, 1972.

(c) Since the following Air Pollution Control Districts have deleted definitions which could allow a relaxation of emission limitations, the deletions are disapproved:

(1) Merced County APCD.

(i) Rule 102(hh), submitted on June 30, 1972, previously approved under 40 CFR 52.223, and deleted by the August 2, 1976 submittal, is retained.

(2) El Dorado County APCD.

(i) Rule 102(LL), submitted on November 4, 1977, previously approved at 43 FR 51632, and deleted by the May 23, 1979 submittal, is retained.

(d) The following rules or portions of rules are disapproved since they contain provisions which are inconsistent with 40 CFR part 58, Ambient Air Quality Surveillance.

(1) Lake County APCD.

(i) Section 224, *Equivalent Method,* and Table V, *Table of Standards, Applicable Statewide,* submitted on February 10, 1977.

(ii) Table V, *Concentrations and Methods,* submitted on January 2, 1979, and Table V, submitted on February 10, 1976 and previously approved at 42 FR 42224.

(e) Since the following air pollution control districts have revised definitions so as to render the associated emission control requirements less stringent without a control strategy demonstration, the revisions are disapproved.

(1) Mendocino County APCD.

(i) Rule 130(p4), submitted on November 10, 1976. (Part III–49, previously submitted on February 21, 1972, and approved in 40 CFR 52.223, is retained).

(ii) Rule 130(s3), submitted on November 10, 1976. (Part III–55, previously submitted on February 21, 1972, and approved in 40 CFR 52.233, is retained).

(2) Shasta County APCD.

(i) The definition of "modification" in Rule 1:2, *Definitions,* submitted on October 13, 1977, is disapproved.

(3) San Bernardino County Desert APCD.

(i) Rule 103, *Definition of Terms,* submitted on November 4, 1977, is disapproved with respect to the deletion of the following terms: "Distilling type heater", "Noncomplying orchard heater", "Pipe line systems", and "Return stack heater". (Rule 2, *Definitions,* submitted on February 21, 1972 and approved in 40 CFR 52.223, is retained for the above terms.)

(4) Southeast Desert Intrastate Region.

(i) San Bernardino County Desert APCD.

(A) Rule 102, *Definition of Terms,* submitted November 4, 1977 is disapproved

with respect to the deletion of the following terms: Distilling type heater, Non-complying orchard heater, Pipe line systems, and Return stack heater. Rule 2, *Definitions*, submitted February 21, 1972 and approved in 40 CFR 52.223, is retained for the above terms.

(f) The following APCD rules are disapproved because they exempt some portions of the districts from the existing air pollution control regulations without setting forth substitute rules for the exempted areas.

(1) El Dorado County APCD.

(i) Rule 201, submitted on November 4, 1977, is disapproved. (The previously approved Rule 49, submitted on June 30, 1972, is retained for Federal enforcement purposes.)

(g) The following Air Pollution Control District (APCD) rules are disapproved pursuant to section 110(a)(2)(K) of the Clean Air Act because they could allow recovery of legal expenses associated with permit enforcement actions.

(1) Monterey Bay Unified APCD.

(i) Rule 300 (i)(1), *Permit Fee*, submitted on December 17, 1979.

(2) El Dorado County APCD.

(i) Rule 104, submitted on May 23, 1979.

[42 FR 39664, Aug. 5, 1977]

EDITORIAL NOTE: For FEDERAL REGISTER citations affecting § 52.236, see the List of CFR Sections Affected, which appears in the Finding Aids section of the printed volume and on GPO Access.

§ 52.237 Part D disapproval.

(a) The following portions of the California SIP are disapproved because they do not meet the requirements of Part D of the Clean Air Act.

(1) The ozone and CO attainment demonstrations for the South Coast Air Basin. No major stationary source, or major modification of a stationary source, of carbon monoxide or volatile organic compounds may be constructed in the South Coast Air Basin unless the construction permit application is complete on or before August 30, 1988.

(2) The ozone attainment demonstration for Ventura County. No major stationary source, or major modification of a stationary source, of volatile organic compounds may be constructed in the Ventura County nonattainment area unless the construction permit application is complete on or before November 4, 1988.

(3) The ozone attainment demonstration for the Sacramento AQMA. No major stationary source, or major modification of a stationary source, of volatile organic compounds may be constructed in the Sacramento nonattainment area unless the construction permit application is complete on or before January 3, 1989.

(4) The ozone attainment demonstration for the Fresno County APCD.

(5) The ozone attainment demonstration for the Kern County APCD.

(6) The attainment assessment, motor vehicle emissions budgets, and Reasonably Available Control Measure (RACM) portions of the San Francisco Bay Area Ozone Attainment Plan for the 1–Hour National Ozone Standard, June 1999.

[46 FR 5979, Jan. 21, 1981, as amended at 48 FR 53118, Nov. 25, 1983; 50 FR 35798; Sept. 4, 1985; 53 FR 1781, Jan. 22, 1988; 53 FR 39088, Oct. 5, 1988; 53 FR 48537, Dec. 1, 1988; 55 FR 9878, 9880, Mar. 16, 1990; 56 FR 2853, Jan. 25, 1991; 66 FR 48347, Sept. 20, 2001]

§ 52.238 Commitment to undertake rulemaking.

(a) The Administrator shall undertake rulemaking, after the South Coast mobile source public consultative process, to promulgate any VOC and NO_X mobile source controls which are determined to be appropriate for EPA and needed for ozone attainment in the Los Angeles-South Coast Air Basin Area.

(b) [Reserved]

[62 FR 1187, Jan. 8, 1997]

§ 52.239 Alternate compliance plans.

(a) Alternative compliance plans (bubble plans) developed under the District rules listed below must be submitted to EPA by the State of California as SIP revisions. The emission limits contained in the District rule will continue to be enforceable by EPA and private citizens under sections 113 and 304(a) of the Act until the alternative compliance plans are approved by EPA for inclusion in the SIP.

(1) Bay Area AQMD.

(i) Rule 4 of Regulation 8, submitted on February 7, 1980.

(b) Alternative compliance plans (bubble plans) developed under the District rules listed below are considered the applicable requirements in the SIP which are enforceable by EPA and private citizens under section 113 and 304(a) of the Act. Alternative compliance plans must be submitted to EPA after their approval by the District. The District rules do not apply to or supersede the conditions that a source must meet under nonattainment or PSD permit programs, new source performance standards, or national emission standards for hazardous air pollutants.

(1) Bay Area AQMD.

(i) Rules 11, 13 and 19 of Regulation 8, submitted on February 7, 1980.

[47 FR 11870, Mar. 19, 1982]

§ 52.240 Compliance schedules.

(a) The requirements of § 51.262(a) of this chapter are not met in the following Air Pollution Control Districts since the regulations cited do not provide increments to progress toward compliance.

(1) Rules 50–A, 52–A, 53–A(a), 53–A(b), 53–A(c), 53.2, 53.3, 54.A, 58.A, 62.1, 68, 69, 70, and 71 of the San Bernardino County APCD.

(2) Rules 53, 72.1, and 72.2 of the Riverside County APCD.

(3) Rules 53, 66.c, and 68.a of the Orange County APCD.

(4) Rule 39.1 of the Santa Barbara County APCD.

(5) Rule 59 of the Ventura County APCD.

(6) Rule 66(c) of the Los Angeles County APCD.

(7) Rule 4.5 of the Siskiyou County APCD.

(8) Rule 64(c) of the Northern Sonoma County APCD.

(9) Rule 409 of the Tulare County APCD.

(b) The requirements of § 51.261 are not met since Rule 68.a of the Orange County Air Pollution Control District does not provide for compliance within 3 years after the Administrator's approval of the plan.

(c) Federal compliance schedule. (1) Except as provided in paragraph (c)(2) of this section, the owner or operator of any stationary source subject to Rule 68.a of the Orange County Air Pollution Control District shall comply with such rule or regulation on or before January 31, 1974.

(i) Any owner or operator in compliance with this rule on the effective date of this regulation shall certify such compliance to the Administrator no later than 120 days following the effective date of this paragraph.

(ii) Any owner or operator who achieves compliance with such rule or regulation after the effective date of this regulation shall certify such compliance to the Administrator within 5 days of the date compliance is achieved.

(2) Any owner or operator of a stationary source subject to paragraph (c)(1) of this section may, not later than 120 days following the effective date of this paragraph, submit to the Administrator for approval a proposed compliance schedule that demonstrates compliance with the rules and regulations specified in paragraph (c)(1) of this section as expeditiously as practicable but no later than July 31, 1975. The compliance schedule shall provide for increments of progress toward compliance. The dates for achievement of such increments of progress shall be specified. Increments of progress shall include, but not be limited to: Submittal of final control plan to the Administrator; letting of necessary contracts for construction or process changes or issuance of orders for the purchase of component parts to accomplish emission control or process modification; initiation of onsite construction or installation of emission control equipment or process modification; completion of onsite construction or installation of emissioncontrol equipment or process modification; and final compliance.

(3) Any owner or operator who submits a compliance schedule pursuant to this paragraph shall, within 5 days after the deadline for each increment of progress, certify to the Administrator whether or not the required increment of the approved compliance schedule has been met.

(d) Regulation for increments of progress. (1) The requirements of this

paragraph are applicable to any stationary source in the following Air Pollution Control Districts subject to the indicated regulations.

(i) Rules 50–A, 52–A, 53–A(a), 53–A(b), 53–A(c), 53.2, 53.3, 54.A, 58.A, 62.1, 68, 69, 70, and 71 of the San Bernardino County APCD.

(ii) Rules 53, 72.1, and 72.2 of the Riverside County APCD.

(iii) Rules 53 and 66.c of the Orange County APCD.

(iv) Rule 39.1 of the Santa Barbara County APCD.

(v) Rule 59 of the Ventura County APCD.

(vi) Rules 66(c) and 68 of the Los Angeles County APCD.

(vii) Rule 4.5 of the Siskiyou County APCD.

(viii) Rule 64(c) of the Northern Sonoma County APCD.

(ix) Rule 409 of the Tulare County APCD.

(2) Except as provided in paragraph (3) of this section, the owner or operator of any stationary source shall, no later than 120 days following the effective date of this paragraph, submit to the Administrator for approval, a proposed compliance schedule that demonstrates compliance with the applicable regulations as expeditiously as practicable but no later than the final compliance date specified by such applicable regulation. The compliance schedule shall provide for periodic increments of progress toward compliance. The dates for achievement of such increments shall be specified. Increments of progress shall include, but not be limited to: Submittal of final control plan to the Administrator; letting of necessary contracts for construction or process changes or issuance of orders for the purchase of component parts to accomplish emission control or process modification; initiation of onsite construction or installation of emission control equipment or process modification; completion of onsite construction or installation of emission control equipment or process modification; and final compliance.

(3) Where any such owner or operator demonstrates to the satisfaction of the Administrator that compliance with the applicable regulations will be achieved on or before January 31, 1974, no compliance schedule shall be required.

(4) Any owner or operator who submits a compliance schedule pursuant to this paragraph shall, within 5 days after the deadline for each increment of progress, certify to the Administrator whether or not the required increment of the approved compliance schedule has been met.

(5) Any compliance schedule adopted by the State and approved by the Administrator shall satisfy the requirements of this paragraph for the affected source.

(e) [Reserved]

(f) State compliance schedules. (1) [Reserved]

(2) The compliance schedules for the sources identified below are disapproved as not meeting the requirements of Subpart N of this chapter. All regulations cited are air pollution control regulations of the county in which the source is located, unless otherwise indicated.

Source	Location (county)	Rule or regulation involved	Date of adoption	Effective date	Final compliance date
Simpson Lee Paper Co. (Order No. 72–V–7).	Shasta	3.2	Oct. 31, 1973 ..	Immediately	Jan. 15, 1976.
Monolith Portland Cement Co. (Order No. 73–6 as amended Mar. 11, 1974).	Kern	401(b), 404.1, 406.	Dec. 31, 1973	.....do	July 1, 1976.

[37 FR 19814, Sept. 22, 1972]

EDITORIAL NOTE: For FEDERAL REGISTER citations affecting § 52.240, see the List of CFR Sections Affected, which appears in the Finding Aids section of the printed volume and on GPO Access.

§ 52.241 Interim approval of enhanced inspection and maintenance program.

(a) Under section 348(c) of the National Highway Systems Designation Act (Pub. L. 104–59), the California SIP is approved as meeting the provisions of section 182(c)(3) for applicable ozone areas and section 187(a)(6) for applicable carbon monoxide areas with respect to the requirements for enhanced motor vehicle inspection and maintenance. This approval expires on August 7, 1998, or earlier if by such earlier date the State has submitted as a SIP revision the required demonstration that the credits are appropriate and that the program is otherwise in compliance with the Clean Air Act and EPA takes final action approving that revision.

[62 FR 1187, Jan. 8, 1997]

§ 52.242 Disapproved rules and regulations.

(a) The following Air Pollution Control District rules are disapproved because they do not meet the requirements of section 110 of the Clean Air Act.

(1) South Coast Air Quality Management District.

(i) Rule 1623, Credits for Lawn and Garden Equipment, submitted on August 28, 1996 and adopted on May 10, 1996.

(ii) Rule 118, Emergencies, submitted on May 21, 1998.

(2) Antelope Valley Air Pollution Control District.

(i) Rule 118, Emergencies, submitted on March 10, 1998.

(3) Imperial County Air Pollution Control District.

(i) Rule 401, Opacity of Emissions submitted on May 26, 2000. Rule 401 submitted on June 9, 1987, is retained.

(4) San Joaquin Valley Unified Air Pollution Control District.

(i) Rule 4101, Visible Emissions, submitted on December 6, 2001 and adopted on November 15, 2001.

[65 FR 10717, Feb. 29, 2000, as amended at 66 FR 49297, Sept. 27, 2001; 67 FR 62385, Oct. 7, 2002; 69 FR 1273, Jan. 8, 2004]

§ 52.243 Interim approval of the Carbon Monoxide plan for the South Coast.

The Carbon Monoxide plan for the Los Angeles-South Coast Air Basin is approved as meeting the provisions of sections 171(1), 172(c)(2), and 187(a)(7) for quantitative milestones and reasonable further progress, and the provisions of section 187(a)(7) for attainment demonstration. This approval expires on August 7, 1998, or earlier if by such earlier date the State has submitted as a SIP revision a demonstration that the carbon monoxide emission reduction credits for the enhanced motor vehicle inspection and maintenance program are appropriate and that the program is otherwise in compliance with the Clean Air Act and EPA takes final action approving that revision, as provided by section 348(c) of the National Highway System Designation Act (Public Law 104–59).

[63 FR 19662, Apr. 21, 1998]

§ 52.244 Motor vehicle emissions budgets.

(a) Approval of the motor vehicle emissions budgets for the following ozone rate-of-progress and attainment SIPs will apply for transportation conformity purposes only until new budgets based on updated planning data and models have been submitted and EPA has found the budgets to be adequate for conformity purposes.

(1) Antelope Valley, approved January 8, 1997;

(2) Coachella, approved January 8, 1997;

(3) Kern, approved January 8, 1997;

(4) Mojave, approved January 8, 1997;

(5) Sacramento, approved January 8, 1997;

(6) South Coast, approved April 10, 2000;

(7) Ventura, approved January 8, 1997.

(b) Approval of the motor vehicle emissions budgets for the following ozone maintenance SIP will apply for transportation conformity purposes only until new budgets based on updated planning data and models have been submitted and EPA has found the budgets to be adequate for conformity purposes.

(1) Monterey, approved January 17, 1997.

(2) [Reserved]

(c) Approval of the motor vehicle emissions budgets for the following carbon monoxide maintenance SIPs will apply for transportation conformity purposes only until new budgets based on updated planning data and models have been submitted and EPA has found the budgets to be adequate for conformity purposes.

(1) Bakersfield, approved March 31, 1998;

(2) Chico, approved March 31, 1998;

(3) Fresno, approved March 31, 1998;

(4) Lake Tahoe-North, approved March 31, 1998;

(5) Lake Tahoe-South, approved March 31, 1998;

(6) Modesto, approved March 31, 1998;

(7) Sacramento, approved March 31, 1998;

(8) San Diego, approved March 31, 1998;

(9) San Francisco Bay Area, approved March 31, 1998;

(10) Stockton, approved March 31, 1998.

(d) Approval of the motor vehicle emissions budgets for the following nitrogen dioxide maintenance SIP will apply for transportation conformity purposes only until new budgets based on updated planning data and models have been submitted and EPA has found the budgets to be adequate for conformity purposes.

(1) South Coast, approved on July 24, 1998.

(2) [Reserved]

(e) Approval of the motor vehicle emissions budgets for the following PM–10 reasonable further progress and attainment SIPs will apply for transportation conformity purposes only until new budgets based on updated planning data and models have been submitted and EPA has found the budgets to be adequate for conformity purposes.

(1) South Coast, approved April 18, 2003.

(2) Coachella Valley, approved April 18, 2003.

[67 FR 69146, Nov. 15, 2002, as amended at 68 FR 19317, 19319, Apr. 18, 2003]

§ 52.245 [Reserved]

§ 52.246 Control of dry cleaning solvent vapor losses.

(a) For the purpose of this section, "dry cleaning operation" means that process by which an organic solvent is used in the commercial cleaning of garments and other fabric materials.

(b) This section is applicable in the Metropolitan Los Angeles, Sacramento Valley, and San Joaquin Valley Intrastate Air Quality Control Regions (the "Regions"), as described in 40 CFR part 81, dated July 1, 1979, except as follows:

(1) In the following portions of the Sacramento Valley Region, this section is rescinded:

(i) Sacramento County APCD.

(ii) Placer County APCD (Mountain Counties Air Basin portion).

(iii) Yuba County APCD.

(iv) Sutter County APCD.

(2) In the following portions of the Metropolitan Los Angeles Intrastate Region, this section is rescinded:

(i) Ventura County APCD.

(3) In the following portions of the San Joaquin Valley Intrastate Region, this section is rescinded:

(i) San Joaquin County APCD.

(ii) Stanislaus County APCD.

(iii) Tulare County APCD.

(iv) Fresno County APCD.

(c) Any dry cleaning establishment that uses solvents containing 4 percent or more by volume of any reactive organic material listed under paragraphs (k) (1), (2), and (3) of § 52.254 except perchloroethylene or any saturated halogenated hydrocarbon shall reduce the emissions of the discharged organics by 90 percent by use of activated carbon adsorption, or other appropriate means, not later than January 1, 1975.

(d) If incineration is used as a control technique, 90 percent or more of the carbon in the organic compounds being incinerated must be oxidized to carbon dioxide.

[38 FR 31246, Nov. 12, 1973, as amended at 42 FR 41122, Aug. 15, 1977; 42 FR 42226, Aug. 22, 1977; 47 FR 15586, Apr. 12, 1982; 47 FR 18856, May 3, 1982; 47 FR 26385, June 18, 1982; 47 FR 28622, July 1, 1982; 47 FR 29670, July 8, 1982; 47 FR 50865, Nov. 10, 1982]

§§ 52.247–52.251 [Reserved]

§ 52.252 Control of degreasing operations.

(a) "Degreasing" means any operation using an organic solvent as a surface cleaning agent prior to fabricating, surface coating, electroplating, or any other process.

(b) This section is applicable in the Sacramento Valley, San Joaquin Valley, and San Francisco Bay Area Intrastate Air Quality Control Regions (the "Regions"), as described in 40 CFR part 81, dated July 1, 1979, except as follows:

(1) In the following portions of the Sacramento Valley Region, this section is rescinded:

(i) Sacramento County APCD.

(ii) Placer County APCD (Mountain Counties Air Basin portion).

(iii) Yuba County APCD.

(iv) Sutter County APCD.

(c) Any organic emissions discharged from degreasing operations must either be reduced by at least 85 percent, or the degreasing solvent must be classified as non-photochemically reactive as defined by paragraph (k) of § 52.254 not later than January 1, 1975. This regulation shall not be construed as lessening any emission control requirement specified under EPA approved regulations or § 52.254. Degreasing operations using perchloroethylene or saturated halogenated hydrocarbons shall be exempt from the requirements of this section.

[38 FR 31249, Nov. 12, 1973, as amended at 42 FR 42226, Aug. 22, 1977; 47 FR 15586, Apr. 12, 1982; 47 FR 18856, May 3, 1982; 47 FR 19332, May 5, 1982; 47 FR 28622, July 1, 1982]

§ 52.253 Metal surface coating thinner and reducer.

(a) All terms defined in § 52.254 are used herein with the meanings so defined.

(b) This section is applicable in the Metropolitan Los Angeles, San Diego, Sacramento Valley, San Joaquin Valley, and San Francisco Bay Area Intrastate Air Quality Control Regions (the "Regions"), as described in 40 CFR part 81, dated July 1, 1979, except as follows:

(1) In the following portions of the Sacramento Valley Intrastate Region, this section is either fully rescinded or partially rescinded subject to the conditions specified as follows:

(i) Sacramento County APCD.

(ii) Placer County APCD (Mountain Counties Air Basin portion).

(iii) This section is rescinded for metal parts and products coaters which are subject to and in full compliance with Yolo-Solano County Rule 2.25 submitted on February 25, 1980.

(iv) Yuba County APCD.

(v) Sutter County APCD.

(2) In the following portions of the Metropolitan Los Angeles Intrastate Region, this section is either fully rescinded or partially rescinded subject to the conditions specified as follows:

(i) This section is fully rescinded for the Ventura County APCD.

(ii) This section is rescinded for magnet wire insulators, can and coil coaters, metal parts coaters, and auto assembly line coaters which are subject to and in full compliance with Rules 1107, 1115, 1125, and 1126 in the South Coast AQMD.

(iii) This section is rescinded for metal parts coaters that are subject to and in full compliance with Rule 330 submitted on October 18, 1979, in the Santa Barbara County APCD.

(3) In the following portions of the San Joaquin Valley Intrastate Region, this section is rescinded for certain sources subject to the conditions specified:

(i) This section is rescinded for metal parts and products coaters which are subject to and in full compliance with Kern County Rule 410.4, submitted on October 15, 1979.

(ii) This section is rescinded for metal parts and products coaters which are subject to and in full compliance with Madera County APCD's Rule 410.4 submitted on October 10, 1980.

(iii) This section is rescinded for metal parts and products coaters which are subject to and in full compliance with Merced County Rule 409.4 submitted on October 10, 1980.

(iv) This section is rescinded for metal parts and products coaters which are subject to and in full compliance with San Joaquin County Rule 409.4 submitted on October 10, 1980.

(v) This section is rescinded for metal parts and products coaters which are subject to and in full compliance with

Stanislaus County Rule 410.4 submitted on October 10, 1980.

(vi) This section is rescinded for metal parts and products coaters which are subject to and in full compliance with Tulare County Rule 410.4 submitted on October 10, 1980.

(vii) This section is rescinded for metal parts and products coaters which are subject to and in full compliance with Kings County Rule 410.4 submitted on October 10, 1980.

(viii) This section is rescinded for metal parts and products coaters which are subject to and in full compliance with Fresno County Rule 409.4 submitted on October 15, 1979.

(4) In the San Francisco Bay Area Intrastate Region this section is rescinded for certain operations, subject to the conditions specified below:

(i) This section is rescinded for metal container, closure and coil coating operations, light and medium-duty motor vehicle assembly plants, large appliance and metal furniture coaters, and miscellaneous metal parts and products coating operations, which are subject to and in full compliance with Rules 11, 13, 14, and 19 of Regulation 8 in the Bay Area AQMD.

(5) In the San Diego Intrastate Region, this section is rescinded:

(i) This section is rescinded for metal parts and products coaters which are subject to and in full compliance with San Diego APCD Rule 67.3, submitted on October 25, 1979.

(c) The composition of the organics in all metal surface coating thinners and reducers that are manufactured after January 1, 1975, and are used in the Regions, shall conform to paragraph (k) of § 52.254 so as to be defined as a nonphotochemically reactive solvent.

(d) After July 1975, the composition of the organics in all metal surface coating thinners and reducers that are used in the Regions, shall conform to paragraph (k) of § 52.254 so as to be defined as a non-photochemically reactive solvent.

(e) If there is an inadequate supply of necessary solvent ingredients needed in the manufacture of metal surface coating thinners and reducers for the purpose of meeting the composition requirements of this section in the time constraint required by this section; then evidence of such a supply inadequacy must be presented to the Administrator by the manufacturers of the metal surface coating thinners and reducers, so that the Administrator may grant to the industry an appropriate implementation time extension for meeting the requirements of this section, if and as warranted by the evidence presented.

[38 FR 31249, Nov. 12, 1973, as amended at 42 FR 28123, June 2, 1977; 46 FR 5979, Jan. 21, 1981; 46 FR 42461, Aug. 21, 1981; 47 FR 11870, Mar. 19, 1982; 47 FR 15586, Apr. 12, 1982; 47 FR 18856, May 3, 1982; 47 FR 19332, May 5, 1982; 47 FR 19698, May 7, 1982; 47 FR 24308, June 4, 1982; 47 FR 28622, July 1, 1982]

§ 52.254 Organic solvent usage.

(a) This section is applicable in the Sacramento Valley, San Francisco Bay Area, and San Joaquin Valley Intrastate Air Quality Control Regions (the "Regions"), as described in 40 CFR part 81, dated July 1, 1979, except as follows:

(1) In the following portions of the San Joaquin Valley Region, only the hourly emission limitations contained in paragraphs (b), (c), and (d) of this section are in effect; the following paragraphs, needed for interpretation are also in effect: Paragraphs (e) through (l) and (o) through (q) of this section. In addition, this section is entirely rescinded for specific operations for some of the counties noted below:

(i) This section is rescinded entirely for metal parts and products coaters which are subject to and in full compliance with Rule 409.4 for the Fresno County APCD, Rule 410.4 for the Kings County APCD, Rule 410.4 for the Madera County APCD, Rule 409.4 for the Merced County APCD, Rule 409.4 for the San Joaquin County APCD, Rule 409.4 for the Stanislaus County APCD, and Rule 410.4 for the Tulare County APCD.

(ii) Kern County APCD. This section is rescinded entirely for metal parts and product coaters which are subject to and in full compliance with Rule 410.4.

(iii) Fresno County APCD.

(iv) San Joaquin County APCD.

(v) Madera County APCD.

(vi) Merced County APCD.

(2) In the following portions of the San Joaquin Valley Region, only the hourly emission limitations contained in paragraphs (b), (c), and (d) of this section and the architectural coatings and solvent disposal emission limitations contained in paragraphs (m) and (n) of this section are in effect; the following paragraphs, needed for interpretation and enforcement of these emission limitations, are also in effect: Paragraphs (e) through (l) and (o) through (q) of this section.

(i) Kings County APCD.

(3) In the following portions of the Sacramento Valley Region, this section is rescinded:

(i) Sacramento County APCD.

(ii) Yolo-Solano APCD.

(iii) Shasta County APCD.

(iv) Placer County APCD (Mountain Counties Air Basin portion).

(v) Yuba County APCD.

(vi) Sutter County APCD.

(vii) El Dorado County (Mountain Counties Air Basin portion).

(4) This section is rescinded for the San Francisco Bay Area Intrastate Region except for paragraph (d), which is retained until December 31, 1982 for sources constructed prior to October 2, 1974. The following paragraphs, needed for interpretation and enforcement of paragraph (d) are also in effect: Paragraphs (e) through (l) and (o) through (q) of this section.

(5) In the following portions of the Sacramento Valley Intrastate Region, paragraph (m) of this section is rescinded.

(i) Butte County APCD.

(ii) Sutter County APCD.

(b) No person shall discharge into the atmosphere more than 15 pounds of organic materials in any 1 day or more than 3 pounds in any 1 hour from any article, machine, equipment, or other contrivance in which any organic solvent or any material containing organic solvent comes into contact with flame or is baked, heat-cured, or heat-polymerized in the presence of oxygen, unless said discharge has been reduced by at least 85 percent. Those portions of any series of articles, machines, equipment, or other contrivances designed for processing continuous web, strip, or wire that emit organic materials in the course of using operations described in this section shall be collectively subject to compliance with this section.

(c) A person shall not discharge to the atmosphere more than 40 pounds of organic materials in any 1 day or more than 8 pounds in any 1 hour from any article, machine, equipment, or other contrivance used under conditions other than those described in paragraph (b) of this section for employing or applying any photochemically reactive solvent, as defined in paragraph (k) of this section, or material containing such photochemically reactive solvent, unless said discharge has been reduced by at least 85 percent. Emissions of organic materials into the atmosphere resulting from air- or heated-drying of products for the first 12 hours after their removal from any article, machine, or other contrivance described in this section shall be included in determining compliance with this paragraph. Emissions resulting from baking, heat-curing, or heat-polymerizing as described in paragraph (b) of this section shall be excluded from determination of compliance with this section. Those portions of any series of articles, machines, equipment, or other contrivances designed for processing a continuous web, strip, or wire that emit organic materials in the course of using operations described in this section shall be collectively subject to compliance with this section.

(d) A person shall not, after August 31, 1976, discharge into the atmosphere more than 3,000 pounds of organic materials in any 1 day or more than 450 pounds in any 1 hour from any article, machine, equipment, or other contrivance in which any non-photochemically reactive organic solvent or any material containing such a solvent is employed or applied, unless said discharge has been reduced by at least 85 percent. Emissions of organic materials into the atmosphere resulting from air- or heated-drying of products for the first 12 hours after their removal from any article, machine, equipment, or other contrivance described in this section shall be included in determining compliance with this section. Emissions resulting from baking, heat-curing, or heat-polymerizing as described in paragraph (b) of this

section shall be excluded from determination of compliance with this section. Those portions of any series of articles, machines, equipment, or other contrivances designed for processing a continuous web, strip, or wire that emit organic materials in the course of using operations described in this section shall be collectively subject to compliance with this section.

(e) Emissions of organic materials to the atmosphere from the cleaning with photochemically reactive solvent, as defined in paragraph (k) of this section, of any article, machine, equipment, or other contrivance described in paragraph (b), (c), or (d) of this section, shall be included with the other emissions of organic materials for determining compliance with this rule.

(f) Emissions of organic materials into the atmosphere required to be controlled by paragraph (b), (c), or (d) of this section, shall be reduced by:

(1) Incineration, provided that 90 percent or more of the carbon in the organic material being incinerated is oxidized to carbon dioxide, or

(2) Adsorption, or

(3) Processing in a manner determined by the Administrator to be not less effective than the methods outlined in paragraph (f) (1) or (2) of this section.

(g) A person incinerating, adsorbing, or otherwise processing organic materials pursuant to this section shall provide, properly install and maintain in calibration, in good working order and in operation, devices as specified in the authority to construct or permit to operate, or as specified by the Administrator, for indicating temperatures, pressures, rates of flow, or other operating conditions necessary to determine the degree and effectiveness of air pollution control.

(h) Any person using organic solvents or any materials containing organic solvents shall supply the Administrator upon request and in the manner and form prescribed by him, written evidence of the chemical composition, physical properties, and amount consumed for each organic solvent used.

(i) The provisions of this section shall not apply to:

(1) The manufacture of organic solvents, or the transport or storage of organic solvents or materials containing organic solvents.

(2) The use of equipment for which other requirements are specified by rules or which are exempted from air pollution control requirements by applicable rules affecting the storage of petroleum products, effluent oil-water separators, and the transfer of gasoline.

(3) The spraying or other employment of insecticides, pesticides, or herbicides.

(4) The employment, application, evaporation, or drying of saturated halogenated hydrocarbons or perchloroethylene.

(5) The use of any material in any article, machine, equipment, or other contrivance described in paragraph (b), (c), (d), or (e) of this section, if:

(i) The volatile content of such materials consists only of water and organic solvent, and

(ii) The organic solvents comprise not more than 20 percent by volume of said volatile content, and

(iii) The volatile content is not photochemically reactive as defined in paragraph (k) of this section, and

(iv) The organic solvent or any material containing organic solvent does not come into contact with flame.

This last stipulation applies only for those articles, machines, equipment, or contrivances that are constructed or modified after the effective date of this section.

(6) The use of any material in any article, machine, equipment or other contrivance described in paragraph (b), (c), (d), or (e) of this section, if:

(i) The organic solvent content of such material does not exceed 30 percent by volume of said material; this to be effective until January 1, 1977. After January 1, 1977, the organic solvent content of such material must not exceed 20 percent by volume of said material.

(ii) The volatile content is not photochemically reactive as defined in paragraph (k) of this section, and

(iii) The organic solvent or any material containing organic solvent does not come into contact with flame. This last stipulation applies only for those

articles, machines, equipment, or contrivances that are constructed or modified after the effective date of this section.

(j) For the purposes of this section, organic solvents include diluents, thinners, and reducers and are defined as organic materials that are liquids at standard conditions and are used as dissolvers, viscosity reducers, or cleaning agents, except that such materials exhibiting a boiling point higher than 220 °F at 0.5 millimeter mercury absolute pressure or having an equivalent vapor pressure shall not be considered to be solvents unless exposed to temperatures exceeding 220 °F.

(k) For the purpose of this section, a photochemically reactive solvent is any solvent with an aggregate of more than 20 percent of its total volume composed of the chemical compounds classified below or which exceeds any of the following individual percentage composition limitations, referred to the total volume of solvent:

(1) A combination of hydrocarbons, alcohols, aldehydes, esters, ethers, or ketones having an olefinic or cycloolefinic type of unsaturation; 5 percent;

(2) A combination of aromatic compounds with 8 or more carbon atoms to the molecule except ethylbenzene, phenyl acetate, and methyl benzoate; 8 percent;

(3) A combination of ethylbenzene, ketones having branched hydrocarbon structures, trichloroethylene or toluene: 20 percent.

Whenever any organic solvent or any constituent of an organic solvent may be classified from its chemical structure into more than one of the above groups of organic compounds, it shall be considered as a member of the most reactive chemical group, that is, that group having the least allowable percent of the total volume of solvents.

(l) For the purpose of this section, organic materials are defined as chemical compounds of carbon excluding carbon monoxide, carbon dioxide, carbonic acid, metallic carbonates, and ammonium carbonate.

(m) Architectural coatings and their use shall conform to the following requirements, on or before January 1, 1975:

(1) A person shall not sell or offer for sale or use in the areas in which this section applies, in containers of 1-quart capacity or larger, any architectural coating containing photochemically reactive solvent, as defined in paragraph (k) of this section.

(2) A person shall not employ, apply, evaporate, or dry in the areas in which this section applies, any architectural coating purchased in containers of 1–quart capacity or larger containing photochemically reactive solvent, as defined in paragraph (k) of this section.

(3) A person shall not thin or dilute any architectural coating with a photochemically reactive solvent, as defined in paragraph (k) of this section.

(4) For the purpose of this section, an architectural coating is defined as a coating used for residential or commercial buildings and their appurtenances, or for industrial buildings.

(n) A person shall not during any one day dispose of a total of more than 1.5 gallons of any photochemically reactive solvent as defined in paragraph (k) of this section, or of any material containing more than 1.5 gallons of any such photochemically reactive solvent by any means that will permit the evaporation of such solvent into the atmosphere.

(o) *Compliance schedule.* (1) Except where other final compliance dates are provided in this section, the owner or operator of any stationary source subject to this section shall comply with this section on or before March 31, 1974. In any event:

(i) Any owner or operator in compliance with this section on the effective date of this section shall certify such compliance to the Administrator no later than 120 days following the effective date of this section.

(ii) Any owner or operator who achieves compliance with this section after the effective date of this section shall certify such compliance to the Administrator within 5 days of the date compliance is achieved.

(p) Any owner or operator of a stationary source subject to paragraph (o)(1) of this section may, not later than 120 days following the effective date of this section, submit to the Administrator for approval a proposed compliance schedule that demonstrates

compliance with the provisions in paragraph (o)(1) of this section as expeditiously as practicable but no later than July 31, 1975. The compliance schedule shall provide for increments of progress toward compliance. The dates for achievement of such increments of progress shall be specified. Increments of progress shall include, but not be limited to:

Submittal of a final control plan to the Administrator; letting of necessary contracts for construction or process changes or issuance of orders for the purchase of component parts to accomplish emission control or process modification; initiation of onsite construction or installation of emission control equipment or process modification; completion of onsite construction or installation of emission control equipment or process modification and final compliance.

(q) Any owner or operator who submits a compliance schedule pursuant to this section shall, within 5 days after the deadline for each increment of progress, certify to the Administrator whether or not the required increment of the approved compliance schedule has been met.

[38 FR 31249, Nov. 12, 1973]

EDITORIAL NOTE: For FEDERAL REGISTER citations affecting § 52.254, see the List of CFR Sections Affected, which appears in the Finding Aids section of the printed volume and on GPO Access.

§ 52.255 Gasoline transfer vapor control.

(a) "Gasoline" means any petroleum distillate having a Reid vapor pressure of 4 pounds or greater.

(b) This section is applicable in the Metropolitan Los Angeles and Sacramento Valley Intrastate Air Quality Control Regions, as described in 40 CFR part 81, dated July 1, 1979, with the following exceptions:

(1) The control requirements of this section are limited to facilities with a total throughput less than 20,000 gallons per day, the refilling of delivery vessels at these facilities, and storage containers serviced by these facilities for those air pollution control districts identified below.

(i) Ventura County APCD.

(2) The control requirements of this section are rescinded in the following air pollution control districts.

(i) South Coast AQMD.

(ii) Santa Barbara County APCD.

(iii) Placer County APCD (Mountain Counties Air Basin portion).

(iv) Sacramento County APCD.

(v) Yolo-Solano County APCD.

(vi) Butte County APCD.

(vii) Glenn County APCD.

(viii) El Dorado County APCD (Mountain Counties Air Basin portion).

(3) The control requirements of this section are rescinded in the following air pollution control districts:

(i) South Coast AQMD.

(ii)–(viii) [Reserved]

(ix) Santa Barbara County APCD.

(x) Placer County APCD (Mountain Counties Air Basin portion).

(xi) Sacramento County APCD.

(xii) Yolo-Solano County APCD.

(xiii) Butte County APCD.

(xiv) Glenn County APCD.

(c) No person shall transfer gasoline from any delivery vessel into any stationary storage container with a capacity greater than 250 gallons unless such container is equipped with a submerged fill pipe and unless the displaced vapors from the storage container are processed by a system that prevents release to the atmosphere of no less than 90 percent by weight of organic compounds in said vapors displaced from the stationary container location.

(1) The vapor recovery portion of the system shall include one or more of the following:

(i) A vapor-tight return line from the storage container to the delivery vessel and a system that will ensure that the vapor return line is connected before gasoline can be transferred into the container.

(ii) Refrigeration-condensation system or equivalent designed to recover no less than 90 percent by weight of the organic compounds in the displaced vapor.

(2) If a "vapor-tight vapor return" system is used to meet the requirements of this section, the system shall be so constructed as to be readily adapted to retrofit with an adsorption system, refrigeration-condensation system, or equivalent vapor removal system, and

so constructed as to anticipate compliance with § 52.256.

(3) The vapor-laden delivery vessel shall be subject to the following conditions:

(i) The delivery vessel must be so designed and maintained as to be vapor-tight at all times.

(ii) The vapor-laden delivery vessel may be refilled only at facilities equipped with a vapor recovery system or the equivalent, which can recover at least 90 percent by weight of the organic compounds in the vapors displaced from the delivery vessel during refilling.

(iii) Facilities that do not have more than a 20,000 gallon per day throughput, and distribute less than 10% of daily volume to delivery vehicles that in turn service storage tanks that are required to have a vapor return or balance system, will not be required to comply with the provisions of paragraph (c) of this section before May 31, 1977. Facilities that service delivery vehicles that in turn deliver not more than 500,000 gallons per year to storage tanks that are required to comply with the provisions of paragraph (c) of this section will not be required to comply with the provisions of paragraph (c) of this section before January 1, 1977. Facilities that exclusively service storage tanks that do not have a required vapor return or balance system, will not be required to have a vapor recovery system.

(iv) Gasoline storage compartments of 1,000 gallons or less in gasoline delivery vehicles presently in use on the promulgation date of this regulation will not be required to be retrofitted with a vapor return system until May 31, 1977.

(v) Storage containers served by delivery vessels filled at distribution facilities with extended compliance dates will not be required to comply with the provisions of paragraph (c) of this section until May 31, 1977.

(d) The provisions of paragraph (c) of this section shall not apply to the following:

(1) Storage containers used primarily for the fueling of implements of husbandry, if such container is equipped by May 31, 1977 with a permanent submerged fill pipe, or at the time of installation for containers installed after this date.

(2) Any storage container having a capacity of 2,000 gallons or less and installed prior to July 1, 1975, if such container is equipped with a permanent submerged fill pipe by May 31, 1977.

(3) Transfer made to storage tanks equipped with floating roofs or their equivalent.

(4) Storage containers installed after July 1, 1975 in Kings County.

(5) Storage containers installed after January 1, 1975 in Madera County.

(e) Compliance schedule:

(1) June 1, 1974—Submit to the Administrator a final control plan, which describes at a minimum the steps that will be taken by the source to achieve compliance with the provisions of paragraph (c) of this section.

(2) March 1, 1975—Negotiate and sign all necessary contracts for emission control systems, or issue orders for the purchase of component parts to accomplish emission control.

(3) May 1, 1975—Initiate on-site construction or installation of emission control equipment.

(4) February 1, 1976—Complete on-site construction or installation of emission control equipment.

(5) July 1, 1976—Assure final compliance with the provisions of paragraph (c) of this section.

(6) Any owner or operator of sources subject to the compliance schedule in this paragraph shall certify to the Administrator, within 5 days after the deadline for each increment of progress, whether or not the required increment of progress has been met.

(f) Paragraph (e) of this section shall not apply:

(1) To a source which is presently in compliance with the provisions of paragraph (c) of this section and which has certified such compliance to the Administrator by June 1, 1974. The Administrator may request whatever supporting information he considers necessary for proper certification.

(2) To a source for which a compliance schedule is adopted by the State and approved by the Administrator.

(3) To a source whose owner or operator submits to the Administrator, by June 1, 1974, a proposed alternative

schedule. No such schedule may provide for compliance after March 1, 1976. If promulgated by the Administrator, such schedule shall satisfy the requirements of this section for the affected source.

(g) Nothing in this section shall preclude the Administrator from promulgating a separate schedule for any source to which the application of the compliance schedule in paragraph (e) of this section fails to satisfy the requirements of §§51.261 and 51.262(a) of this chapter.

(h) Any gasoline-dispensing facility subject to this section that installs a storage tank after the effective date of this section shall comply with the requirements of paragraph (c) of this section by March 1, 1976 and prior to that date shall comply with paragraph (e) of this section as far as possible. Any facility subject to this section that installs a storage tank after March 1, 1976, shall comply with the requirements of paragraph (c) of this section at the time of installation.

[38 FR 31251, Nov. 12, 1973]

EDITORIAL NOTE: For FEDERAL REGISTER citations affecting §52.255, see the List of CFR Sections Affected, which appears in the Finding Aids section of the printed volume and on GPO Access.

§52.256 Control of evaporative losses from the filling of vehicular tanks.

(a) "Gasoline" means any petroleum distillate having a Reid vapor pressure of 4 pounds or greater.

(b) This section is applicable in the Metropolitan Los Angeles and Sacramento Valley Intrastate Air Quality Control Regions, except as follows:

(1) In the following portions of the Metropolitan Los Angeles Intrastate Region, this section is rescinded.

(i) South Coast AQMD.

(ii) Santa Barbara County APCD.

(2) In the following portions of the San Joaquin Valley Intrastate Region, this section is rescinded.

(i) Kings County APCD.

(3) In the following portion of the Sacramento Valley Intrastate Region, this section is rescinded.

(i) Sacramento County APCD.

(ii) El Dorado County APCD (Mountain Counties Air Basin portion).

(iii) Placer County APCD (Mountain Counties Air Basin portion).

(c) A person shall not transfer gasoline to an automotive fuel tank from a gasoline dispensing system unless the transfer is made through a fill nozzle designed to:

(1) Prevent discharge of hydrocarbon vapors to the atmosphere from either the vehicle filler neck or dispensing nozzle;

(2) Direct vapor displaced from the automotive fuel tank to a system wherein at least 90 percent by weight of the organic compounds in displaced vapors are recovered; and

(3) Prevent automotive fuel tank overfills or spillage on fill nozzle disconnect.

(d) The system referred to in paragraph (c) of this section can consist of a vapor-tight vapor return line from the fill nozzle/filler neck interface to the dispensing tank or to an adsorption, absorption, incineration, refrigeration-condensation system or its equivalent.

(e) Components of the systems required by paragraph (c) of §52.255 can be used for compliance with paragraph (c) of this section.

(f) If it is demonstrated to the satisfaction of the Administrator that it is impractical to comply with the provisions of paragraph (c) of this section as a result of vehicle fill neck configuration, location, or other design features for a class of vehicles, the provisions of this paragraph shall not apply to such vehicles. However, in no case shall such configuration exempt any gasoline dispensing facility from installing and using in the most effective manner a system required by paragraph (c) of this section.

(g) Compliance schedule:

(1) January 1, 1975—Submit to the Administrator a final control plan, which describes at a minimum the steps that will be taken by the source to achieve compliance with the provisions of paragraph (c) of this section.

(2) March 1, 1975—Negotiate and sign all necessary contracts for emission control systems, or issue orders for the purchase of component parts to accomplish emission control.

(3) May 1, 1975—Initiate on-site construction or installation of emission

control equipment. Compliance with the requirements of paragraph (c) of this section shall be as soon as practicable, but no later than specified in paragraphs (g) (4) and (5)of this section.

(4) May 1, 1977—Complete on-site construction or installation of emission control equipment or process modification.

(5) May 31, 1977—Assure final compliance with the provisions of paragraph (c) of this section.

(6) Any owner or operator of sources subject to the compliance schedule in this paragraph (g) shall certify to the Administrator, within 5 days after the deadline for each increment of progress, whether or not the required increment of progress has been met.

(h) Paragraph (g) of this section shall not apply:

(1) To a source which is presently in compliance with the provisions of paragraph (c) of this section and which has certified such compliance to the Administrator by January 1, 1975. The Administrator may request whatever supporting information he considers necessary for proper certification.

(2) To a source for which a compliance schedule is adopted by the State and approved by the Administrator.

(3) To a source whose owner or operator submits to the Administrator, by June 1, 1974, a proposed alternative schedule. No such schedule may provide for compliance after May 31, 1977. If promulgated by the Administrator, such schedule shall satisfy the requirements of this section for the affected source.

(i) Nothing in this section shall preclude the Administrator from promulgating a separate schedule for any source to which the application of the compliance schedule in paragraph (g) of this section fails to satisfy the requirements of §§ 51.261 and 51.262(a) of this chapter.

(j) Any gasoline dispensing facility subject to this section that installs a gasoline dispensing system after the effective date of this section shall comply with the requirements of paragraph (c) of this section by May 31, 1977, and prior to that date shall comply with paragraph (g) of this section as far as possible. Any facility subject to this section that installs a gasoline dispensing system after May 31, 1977, shall comply with the requirements of paragraph (c) of this section at the time of installation.

[38 FR 31251, Nov. 12, 1973, as amended at 39 FR 4881, Feb. 8, 1974; 39 FR 21053, June 18, 1974; 46 FR 5979, Jan. 21, 1981; 46 FR 60203, Dec. 9, 1981; 47 FR 19332, May 5, 1982; 47 FR 19698, May 7, 1982; 47 FR 28622, July 1, 1982; 47 FR 29538, July 7, 1982; 51 FR 40676, Nov. 7, 1986]

§§ 52.257–52.262 [Reserved]

§ 52.263 Priority treatment for buses and carpools—Los Angeles Region.

(a) *Definitions:*

(1) "Carpool" means a vehicle containing three or more persons.

(2) "Bus/carpool lane" means a lane on a street or highway open only to buses (or to buses and carpools), whether constructed especially for that purpose or converted from existing lanes.

(3) "Preferential treatment" for any class of vehicles, means either the setting aside of one traffic lane for the exclusive use of such vehicles or other measures (for example, access metering or setting aside the entire street), which the Administrator finds would be at least equal in VMT reduction effect to the establishment of such a lane.

(b) This regulation is applicable in the Metropolitan Los Angeles Intrastate Air Quality Control Region (the "Region").

(c) On or before May 31, 1974, the State of California, through the State Department of Transportation or through other agencies to which legal authority has been delegated, shall establish the following system of bus/carpool lanes.

(1) Ventura/Hollywood Corridor—a concurrent flow exclusive bus/carpool lane from Topanga Canyon Boulevard, Woodland Hills (U.S. 101) to junction of the Hollywood Freeway, and contraflow on the Hollywood Freeway (U.S. 101) from the junction with Ventura Freeway in North Hollywood to Vermont Avenue, and bus preferential treatment on arterial surface streets from Vermont Avenue to the Los Angeles central business district (CBD).

(2) Harbor Freeway Corridor—contraflow on Harbor Freeway (California 11)

from vicinity of Pacific Coast Highway, in Wilmington, to junction of Santa Monica Freeway (I–10), then by surface street preferential treatment to LA/CBD.

(3) Wilshire Corridor—surface street preferential bus treatment from vicinity of San Vincente Boulevard, to LA/CBD.

(4) San Bernardino Freeway Corridor–Bus/carpool lane, either contraflow, or concurrent flow on San Bernardino Freeway from El Monte terminus of existing San Bernardino Freeway bus lane (I–10), to vicinity of Ontario Airport.

(5) Priority Treatment in CBD—provide preferential treatment in CBD on surface streets to connect Wilshire and San Bernardino corridors.

(d) On or before May 31, 1976, the State of California, through the State Department of Transportation or other agencies to which legal authority has been delegated, shall establish the following system of bus and bus/carpool lanes:

(1) Contraflow lane on the Golden State Freeway (I–5) from junction of Ventura Freeway (California 134) in Los Angeles to San Bernardino Freeway (I–10).

(2) Contraflow on Pasadena Freeway (California 11) from terminus in City of Pasadena to Hollywood Freeway (U.S. 101).

(3) Contraflow on Pomona Freeway from San Gabriel Freeway (I–605) to Santa Ana Freeway (I–5).

(4) Concurrent flow in San Diego Freeway (I–405) from Ventura Freeway (U.S. 101) in Sherman Oaks to Newport Freeway (California 55), Costa Mesa.

(5) Concurrent flow on Long Beach Freeway (California 7) from Santa Ana Freeway (I–5), City of Commerce to San Diego Freeway (I–405), Long Beach.

(6) Artesia Freeway (California 91) from Santa Ana Freeway (I–5) to Long Beach Freeway (California 7), Long Beach.

(e) State III will include specific routes in other portions of the Region.

(f) On or before December 31, 1973, the State of California shall submit to the Administrator a compliance schedule showing the steps it will take to establish the system of bus/carpool lanes required by paragraphs (c) and (d) of this section, with each schedule to include the following:

(1) A schedule for the establishment of the lanes. The schedule for the lanes required by paragraph (d) of this section shall provide for the first such lane to be set aside no later than June 1, 1974.

(2) Bus/carpool lanes must be prominently indicated by overhead signs at appropriate intervals and at each intersection of entry ramps.

(3) Bus/carpool lanes must be prominently indicated by distinctive painted, pylon, or physical barriers.

(4) Vehicles using a bus/carpool lane shall have the right of way when crossing other portions of the road to enter or leave such lanes.

(5) At a minimum, the bus/carpool lanes so set aside shall operate from 6:30 a.m. to 9:30 a.m. and from 3:30 to 6:30 a.m. each weekday.

(g) No deviation from the system of bus/carpool lanes required under paragraphs (c) and (d) of this section shall be permitted except upon application made by the State of California to the Administrator at the time of submittal of compliance schedules and approved by him, which application must contain a satisfactory designation of alternate routes for the establishment of such lanes.

[38 FR 31254, Nov. 12, 1973]

§§ 52.264–52.268 [Reserved]

§ 52.269 Control strategy and regulations: Photochemical oxidants (hydrocarbons) and carbon monoxide.

(a) The requirements of subpart G of this chapter are not met because the plan does not provide for attainment and maintenance of the national standards for photochemical oxidants (hydrocarbons) and carbon monoxide in the San Francisco Bay Area, San Diego, Sacramento Valley, San Joaquin Valley, and Southeast Desert Intrastate Regions by May 31, 1975.

(b) The following regulatory changes represent a relaxation of previously submitted regulations, and an adequate control strategy demonstration has not

been submitted showing that the relaxation would not interfere with the attainment and maintenance of the national standards for photochemical oxidants.

(1) Mountain Counties Intrastate Region.

(i) Calaveras County APCD.

(A) The revocation of Rule 412, Organic Liquid Loading, is disapproved. Rule 412 submitted on June 30, 1972 and previously approved in 40 CFR 52.223 is retained.

(B) The revocation of Rule 413, Effluent Oil Water Separators, is disapproved; and Rule 413 submitted on June 30, 1972 and previously approved in 40 CFR 52.223 is retained.

(ii) Tuolumne County APCD.

(A) The revocation of Rule 413, Organic Liquid Loading, is disapproved; and Rule 413 submitted on June 30, 1972 and previously approved in 40 CFR 52.223 is retained.

(B) The revocation of Rule 414, Effluent Oil Water Separators, is disapproved; and Rule 414 submitted on June 30, 1972 and previously approved in 40 CFR 52.223 is retained.

(C) The revocation of Rule 413, Organic Liquid Loadings, submitted February 10, 1977, is disapproved; and the previously approved Rule 413 submitted on June 30, 1972 remains in effect.

(D) The revocation of Rule 414, Effluent Oil Water Separators, submitted on February 10, 1977, is disapproved; and the previously approved Rule 414 submitted on June 30, 1972, remains in effect.

(1–1) San Joaquin Valley Intrastate Region.

(i) Stanislaus County APCD.

(A) Rule 411.1, submitted on November 4, 1977, is disapproved. Rule 411.1 submitted on April 21, 1976 remains in effect.

(ii) Merced County APCD.

(A) Rule 411.1, submitted on November 4, 1977, is disapproved. Rule 411.1, submitted on August 2, 1976, remains in effect.

(iii) Fresno County APCD.

(A) Rules 411.1, Gasoline Transfer Into Vehicle Fuel Tanks, submitted on November 4, 1977, is disapproved; and Rule 411.1 submitted on April 21, 1976, and previously approved under 40 CFR 52.223, is retained.

(iv) Tulare County APCD.

(A) Section 412.1, Transfer of Gasoline Into Vehicle Fuel Tanks, submitted on October 13, 1977, is disapproved; and Section 412.1, submitted on April 21, 1976, and previously approved under 40 CFR 52.223, is retained.

(v) Madera County APCD.

(A) Rule 412.1, Transfer of Gasoline Into Stationary Storage Containers, submitted on October 13, 1977, is disapproved; and Rules 411, Gasoline Storage and 411.1, Transfer of Gasoline Into Stationary Storage Containers, submitted on June 30, 1972, and April 10, 1976, respectively, and previously approved under 40 CFR 52.223 are retained.

(vi) San Joaquin County APCD.

(A) Rule 411.2, Transfer of Gasoline Into Vehicle Fuel Tanks, submitted on November 4, 1977, is disapproved; and rule 411.2, submitted on February 10, 1976 and previously approved under 40 CFR 52.223, is retained.

(2) Sacramento Valley intrastate region:

(i) Sacramento County APCD.

(A) Rule 13 submitted on November 4, 1977, is disapproved.

(ii) Placer County APCD.

(A) Rule 218, Architectural Coatings, adopted on May 20, 1985 and submitted to EPA on February 10, 1986 is disapproved. The version of this rule by the same number and title submitted on July 19, 1983 and approved by EPA on May 3, 1984 is retained.

(iii) Sutter County APCD.

(A) Rule 3.15, Architectural Coatings, adopted on October 15, 1985 and submitted to EPA on February 10, 1986 is disapproved. The version of this rule by the same number and title submitted on January 1, 1981 and approved by EPA on May 3, 1982 is retained.

(3) Southeast Desert Intrastate AQCR.

(i) Los Angeles County APCD.

(A) Regulation IV, rule 465, Vacuum Producing Devices or Systems, submitted on June 6, 1977, is disapproved. Rule 74 with the same title, submitted on June 6, 1977, is disapproved. Rule 69 with the same title, submitted on June 30, 1972 and approved under 40 CFR 52.223, is retained.

(ii) Riverside County APCD.

(A) Regulation IV, rule 465, Vacuum Producing Devices or Systems, submitted on June 6, 1977, is disapproved. Rule 74 with the same title, submitted on June 30, 1972 and approved under 40 CFR 52.223, is retained.

(B) Rule 461, Gasoline Transfer and Dispensing, submitted November 4, 1977, is disapproved. The version of this rule submitted on April 21, 1977 (same number and title), which was previously approved in 40 CFR 52.223, is retained.

(iii) Antelope Valley APCD.

(A) Rule 461, Gasoline Transfer and Dispensing, submitted on May 13, 1999, is disapproved. The version of this rule submitted on January 31, 1996 (same title and number), which was previously approved in 40 CFR 52.220, is retained.

(4) Great Basin Valleys Intrastate Region.

(i) Great Basin Unified APCD.

(A) Rule 418 submitted on November 4, 1977, is disapproved. Rule 418 submitted on April 21, 1976 remains in effect.

(B) Rule 419, Gasoline Loading into Stationary Tanks, submitted on June 22, 1978, is disapproved, and rule 419, submitted April 21, 1976, and previously approved in 40 CFR 52.223, is retained.

(c) The following rules and regulations are disapproved because they represent a relaxation of promulgated EPA regulations, and an adequate control strategy demonstration has not been submitted showing that the relaxation would not interfere with the attainment and maintenance of the national standrds for photochemical oxidants:

(1) Sacramento Valley Intrastate AQCR.

(i) Yolo-Solano APCD.

(A) Rules 2.21(b)(1), 2.21(b)(2), 2.21(b)(4), 2.21(b)(5) and 2.21(b)(6), submitted on June 6, 1977.

(d) Imperial County APCD Rule 415, Gasoline Loading from Tank Trucks and Trailers, submitted by the State on November 4, 1977 is approved as applicable to facilities installed after July 1, 1977. District Rule 125, Gasoline Loading into Tank Trucks and Trailers and Rule 129, Gasoline loading into Tanks, submitted on February 21, 1972 and previously approved under 40 CFR 52.223 are retained as part of the State implementation plan, as applicable to facilities installed prior to July 1, 1977.

(e) The emission reduction credits for the following control measures contained in Ventura County's 1982 Ozone nonattainment area plan, submitted by the Governor's designee on December 31, 1982, are disapproved since the control measures are of an intermittent and voluntary nature and are therefore not approvable under Sections 110(a)(2)(F)(v) and 123 of the Clean Air Act: R–38/N–16, "No Use Day"; R–39/N–17, "No Drive Day"; R–40, "No Spray Day"; R–41/N–18 "Stationary Source Curtailments."

[38 FR 16564, June 22, 1973. Redesignated at 40 FR 3767, Jan. 24, 1975]

EDITORIAL NOTE: For FEDERAL REGISTER citations affecting § 52.269, see the List of CFR Sections Affected, which appears in the Finding Aids section of the printed volume and on GPO Access.

§ 52.270 Significant deterioration of air quality.

(a) With the exception of the areas listed in paragraph (b) of this section:

(1) The requirements of Sections 160 through 165 of the Clean Air Act are not met in California.

(2) The plan does not include approvable procedures for preventing the significant deterioration of air quality.

(3) The provisions of § 52.21 except paragraph (a)(1) are hereby incorporated and made a part of the applicable State plan for the State of California.

(b) *District PSD Plans.* (1) The PSD rules for Sacramento County Air Pollution Control District are approved under Part C, Subpart 1, of the Clean Air Act. However, EPA is retaining authority to apply § 52.21 in certain cases. The provisions of § 52.21 except paragraph (a)(1) are therefore incorporated and made a part of the State plan for California for the Sacramento County Air Pollution Control District for:

(i) Those cogeneration and resource recovery projects which are major stationary sources or major modifications under § 52.21 and which would cause violations of PSD increments.

(ii) Those projects which are major stationary sources or major modifications under § 52.21 and which would either have stacks taller than 65 meters or would use "dispersion techniques" as defined in § 51.1.

(iii) Sources for which EPA has issued permits under § 52.21, including the following permit and any others for which applications are received by June 19, 1985.

Procter & Gamble, SAC 83–01, 5/6/83.

(2) The PSD rules for North Coast Unified Air Quality Management District are approved under Part C, Subpart 1, of the Clean Air Act. However, EPA is retaining authority to apply § 52.21 in certain cases. The provisions of § 52.21 except paragraph (a)(1) are therefore incorporated and made a part of the State plan for California for the North Coast Unified Air Quality Management District for:

(i) Those cogeneration and resource recovery projects which are major stationary sources or major modifications under § 52.21 and which would cause violations of PSD increments.

(ii) Those projects which are major stationary sources of major modifications under § 52.21 and which would either have stacks taller than 65 meters or would use "dispersion techniques" as defined in § 51.1.

(iii) Sources for which EPA has issued permits under § 52.21, including the following permits and any others for which applications are received by July 31, 1985;

(A) Arcata Lumber Co. (NC 78–01; November 8, 1979),

(B) Northcoast Paving (NC 79–03; July 5, 1979),

(C) PG&E Buhne Pt. (NC 77–05).

(3) The PSD rules for Mendocino County Air Pollution Control District are approved under Part C, Subpart 1, of the Clean Air Act. However, EPA is retaining authority to apply § 52.21 in certain cases. The provisions of § 52.21 except paragraph (a)(1) are therefore incorporated and made a part of the State plan for California for the Mendocino County Air Pollution Control District for:

(i) Those cogeneration and resource recovery projects which are major stationary sources or major modifications under § 52.21 and which would cause violations of PSD increments.

(ii) Those projects which are major stationary sources or major modifications under § 52.21 and which would either have stacks taller than 65 meters or would use "dispersion techniques" as defined in § 51.1.

(iii) Any sources for which EPA has issued permits under § 52.21, including any permits for which applications are received by July 31, 1985.

(4) The PSD rules for Northern Sonoma County Air Pollution Control District are approved under Part C, Subpart 1, of the Clean Air Act. However, EPA is retaining authority to apply § 52.21 in certain cases. The provisions of § 52.21 except paragraph (a)(1) are therefore incorporated and made a part of the State plan for California for the Northern Sonoma County Air Pollution Control District for:

(i) Those cogeneration and resource recovery projects which are major stationary sources or major modifications under § 52.21 and which would cause violations of PSD increments.

(ii) Those projects which are major stationary sources or major modifications under § 52.21 and which would either have stacks taller than 65 meters or would use "dispersion techniques" as defined in § 51.1.

(iii) Any sources for which EPA has issued permits under § 52.21, including any permits for which applications are received by July 31, 1985.

[50 FR 25419, June 19, 1985, as amended at 50 FR 30943, July 31, 1985; 68 FR 11322, Mar. 10, 2003; 68 FR 74488, Dec. 24, 2003]

§ 52.271 Malfunction, startup, and shutdown regulations.

(a) The following regulations are disapproved because they would permit the exemption of sources from the applicable emission limitations and therefore do not satisfy the enforcement imperatives of section 110 of the Clean Air Act.

(1) Amador County APCD.

(i) Rule 404, submitted on April 21, 1976.

(ii) Rule 4f, submitted on June 30, 1972, and previously approved under 40 CFR 52.223 (37 FR 19812).

(2) Bay Area APCD.

(i) Regulation 2, Section 3212, and Regulation 3, Section 3203, submitted on April 21, 1976.

(ii) Regulation 2, Section 3212, submitted on February 21, 1972, and previously approved under 40 CFR 52.223 (37 FR 10842).

(3) Calaveras County APCD.

(i) Rules 110 and 402(f), submitted on July 25, 1973.

(ii) Rule 404, submitted on October 13, 1977.

(4) Colusa County APCD.

(i) Rule 4.4g, submitted on July 25, 1973, and Rule 4.4g, submitted on June 30, 1972, and previously approved under 40 CFR 52.223 (37 FR 19812).

(5) Del Norte County APCD.

(i) Rule 540, submitted on November 10, 1976.

(ii) Rule 45, submitted on February 21, 1972, and previously approved under 40 CFR 52.223 (37 FR 10842).

(6) Fresno County APCD.

(i) Rule 110, submitted on June 30, 1972, and previously approved under 40 CFR 52.223.

(ii) Rules 110 and 402(f), submitted on October 23, 1974.

(7) Glenn County APCD.

(i) Rules 95.2 and 95.3, submitted on January 10, 1975.

(8) Great Basin Unified APCD.

(i) Rule 403, submitted on June 6, 1977.

(ii) Rule 617, submitted on November 4, 1977.

(9) Humboldt County APCD.

(i) Rule 540, Submitted on November, 10, 1976.

(ii) Rule 59, Submitted on February 21, 1972 and previously approved under 40 CFR 52.223 (37 FR 10842).

EDITORIAL NOTE: At 46 FR 27118, May 18, 1981, the following paragraph (a)(9) was added to § 52.271.

(9) Monterey Bay Unified APCD.

(i) Rule 214, submitted on March 4, 1980.

(ii) Rule 617, submitted on May 23, 1979.

(10) Kern County APCD.

(i) Rule 111, submitted on July 19, 1974.

(11) Kings County APDC.

(i) Rule 111, submitted on July 25, 1973, and Rule 111, submitted on July 30, 1972, and previously approved under 40 CFR 52.223.

(ii) Rule 111, submitted on November 4, 1977.

(12) Lake County APCD.

(i) Chapter III, Article I, Section 500, and Article II, Sections 510 and 511, submitted on February 10, 1977.

(ii) Part VI, Sections 1 and 2, submitted on June 30, 1972, and previously approved under 40 CFR 52.223.

(13) Los Angeles County APCD.

(i) Rule 430, submitted on June 6, 1977.

(14) Madera County APCD.

(i) Rule 402(f), submitted on January 10, 1975, and Rule 110, submitted on June 30, 1972, and previously approved under 40 CFR 52.223.

(ii) Rule 110, submitted on January 10, 1975.

(15) Mariposa County APCD.

(i) Rule 203(j), submitted on January 10, 1975, and Rule 4.3(g), submitted on February 21, 1972, and previously approved under 40 CFR 52.223.

(ii) Rule 404, submitted on June 6, 1977.

(16) Mendocino County APCD.

(i) Rule 540, submitted on November 10, 1976.

(ii) Sections 1 and 2 of Part VI, submitted on February 21, 1972, and previously approved under 40 CFR 52.223 (37 FR 10842).

(17) Merced County APCD.

(i) Rule 109, submitted on August 2, 1976.

(ii) Rule 109, submitted on June 30, 1972, and previously approved under 40 CFR 52.223 (37 FR 19812).

(18) Nevada County APCD.

(i) Rule 55(f), submitted on February 21, 1972, and previously approved under 40 CFR 52.223 (37 FR 10842).

(19) Northern Sonoma County APCD.

(i) Rule 540, submitted on November 10, 1976.

(20) Placer County APCD.

(i) Rule 55(f), submitted on February 21, 1972, and previously approved under 40 CFR 52.223 (37 FR 10842).

(ii) Rule 404, submitted on October 13, 1977.

(21) Plumas County APCD.

(i) Rule 203(j), submitted on January 10, 1975.

(ii) Rule 404, submitted on June 6, 1977.

(22) Riverside County APCD.

(i) Rule 430, submitted on June 6, 1977.

(23) San Bernardino County APCD.

(i) Rule 430, submitted on June 6, 1977.

(ii) Rule 55, submitted on February 21, 1972, and previously approved under 40 CFR 52.223 (37 FR 10842).

(24) San Joaquin County APCD.

(i) Rule 110, submitted on October 23, 1974, and Rule 110, submitted on June 30, 1972, and previously approved under 40 CFR 52.223 (37 FR 19812).

(25) San Luis Obispo County APCD.

(i) Rule 107, submitted on November 10, 1976.

(ii) Rule 102, submitted on February 21, 1972, and previously approved under 40 CFR 52.223 (37 FR 10842).

(26) Shasta County APCD.

(i) Rule 3:10, submitted on July 19, 1974.

(ii) Rule 3:10, submitted on June 30, 1972, and previously approved under 40 CFR 52.223 (37 FR 19812).

(27) Sierra County APCD.

(i) Rule 51, submitted on June 30, 1972, and previously approved under 40 CFR 52.223 (37 FR 19812), and Rule 203(j), submitted on January 10, 1975, and previously approved under 40 CFR 52.223 (42 FR 23805).

(ii) Rule 404, submitted on June 6, 1977.

(28) Southern California APCD.

(i) Rule 430, submitted on February 10, 1977.

(29) Stanislaus County APCD.

(i) Rule 110, submitted on June 30, 1972, and previously approved under 40 CFR 52.223 (37 FR 19812), and Rule 110, submitted on July 19, 1974.

(30) Tehama County APCD.

(i) Rule 417, submitted on July 19, 1974.

(ii) Rule 4:1g, submitted on June 30, 1972, and previously approved under 40 CFR 52.223 (37 FR 19812).

(31) Trinity County APCD.

(i) Rule 540, submitted on November 10, 1976.

(ii) Rule 44, submitted on June 30, 1972, and previously approved under 40 CFR 52.223 (37 FR 19812).

(32) Tulare County APCD.

(i) Rules 111 and 402(f), submitted on November 10, 1976.

(33) Tuolumne County APCD.

(i) Rule 404, submitted on February 10, 1977, and Rule 402(f), submitted on June 30, 1972, and previously approved under 40 CFR 52.223.

(34) Ventura County APCD.

(i) Rule 32, submitted on July 19, 1974.

(ii) Rule 32, submitted on June 30, 1972, and previously approved under 40 CFR 52.223 (37 FR 19812).

(35) Yuba County APCD.

(i) Rule 4.5, submitted on July 25, 1973.

(b) The following regulations are disapproved since they lack explicit provisions to assure that that NAAQS will not be exceeded while equipment breakdown periods are in effect.

(1) Fresno County APCD.

(i) Rules 110(B), *Variance Required,* and 519, *Emergency Variance,* submitted on January 2, 1979.

(2) Kern County APCD.

(i) Rules 111 (b), *(Equipment Breakdown),* and 519, *Emergency Variance,* submitted on January 2, 1979.

(3) Modoc County APCD.

(i) Rule 2:15, *Breakdown Conditions; Emergency Variances,* submitted on May 7, 1979.

(4) Imperial County APCD.

(i) Rule 111 (B), *Equipment Breakdown,* submitted on December 24, 1979.

(ii) Rule 517, *Emergency Variance,* submitted on December 24, 1979.

(5) Butte County AQMD.

(i) Rule 275, Reporting Procedures for Excess Emissions, submitted on May 10, 1996.

(6) Shasta County AQMD.

(i) Rule 3:10, Excess Emissions, submitted on May 10, 1996.

(c) The following regulations are disapproved because they exempt sources from applicable emissions limitations during malfunctions and/or fail to sufficiently limit startup and shutdown exemptions to those periods where it is technically infeasible to meet emissions limitations.

(1) South Coast Air Quality Management District.

(i) Rule 429, submitted on January 28, 1992.

(d) The following regulations are disapproved because they merely describe how state agencies intend to apply their enforcement discretion and thus, if approved, the regulations would have

no effect on the State Implementation Plan.

(1) Antelope Valley AQMD.

(i) Rule 430, Breakdown Provisions, submitted on February 16, 1999.

(2) Kern County APCD.

(i) Rule 111, Equipment Breakdown, submitted on July 23, 1996.

(3) Mojave Desert AQMD.

(i) Rule 430, Breakdown Provisions, submitted on January 24, 1995.

[43 FR 3277, Jan. 24, 1978]

EDITORIAL NOTE: For FEDERAL REGISTER citations affecting § 52.271, see the List of CFR Sections Affected, which appears in the Finding Aids section of the printed volume and on GPO Access.

§ 52.272 Research operations exemptions.

(a) The requirements of § 51.281 of this chapter are not met because the following regulations allow exemptions to be granted from the applicable emission limitations, thereby potentially rendering the applicable limitations unenforceable. Furthermore, the regulations are inconsistent with the Clean Air Act, because the regulations could permit violations of the National Ambient Air Quality Standards under some circumstances. Therefore, the following regulations are disapproved:

(1) Bay Area APCD.

(i) Regulation 2, Division 1, sections 1214 to 1214.3, submitted on July 25, 1973.

(ii) Regulation 3, Division 1, sections 1205 to 1205.3, submitted on July 25, 1973.

(2) El Dorado County APCD.

(i) Rule 203(D), submitted on November 4, 1977.

(3) Great Basin Unified APCD.

(i) Rule 423, submitted on November 4, 1977.

(4) Los Angeles County APCD.

(i) Rule 441, submitted on June 6, 1977.

(5) Placer County APCD.

(i) Rule 203(D), submitted on October 13, 1977.

(6) Riverside County APCD.

(i) Rule 441, submitted on June 6, 1977.

(7) Sacramento County APCD.

(i) Rule 30, submitted on January 22, 1974.

(8) San Bernardino County APCD.

(i) Rule 441, submitted on June 6, 1977.

(9) Southern California APCD.

(i) Rule 441, submitted on August 2, 1976.

[42 FR 42226, Aug. 22, 1977]

EDITORIAL NOTE: For FEDERAL REGISTER citations affecting § 52.272, see the List of CFR Sections Affected, which appears in the Finding Aids section of the printed volume and on GPO Access.

§ 52.273 Open burning.

(a) The following rules or portions of rules are disapproved because they contain exemptions to open burning (including open agricultural burning) prohibitions, that do not satisfy the requirements of section 110 of the Clean Air Act:

(1) Amador County APCD.

(i) Rules 308 and 312, submitted on April 21, 1976.

(ii) Rule 304, submitted on October 13, 1977.

(iii) Rules 302(G) and 322, submitted on October 15, 1979.

(2) Calaveras County APCD.

(i) Rules 304 and 322, submitted on October 13, 1977.

(3) Del Norte County APCD.

(i) Rule 410(c)(2) and the following portions of Regulation 2: General prohibitions (all of page 1), paragraph (f) of Article I, paragraphs (f) and (g) of Article V, and paragraph (f) of Article VI, submitted on November 10, 1976.

(4) El Dorado County APCD.

(i) Rules 302(C), 304, 307, 319, and 322, submitted on November 4, 1977.

(ii) Rules 302 (C), 318, and 321, submitted on May 23, 1979.

(5) Fresno County APCD.

(i) Rules 416.1(e)(1), (e)(3), and (e)(4), submitted on October 23, 1974.

(ii) Rule 416.1(c)(1), submitted on June 30, 1972, and previously approved under 40 CFR 52.223 (37 FR 19812).

(6) Humboldt County APCD.

(i) Rule 410(c)(2) and the following portions of Regulation 2: General prohibitions (all of page 1), paragraph (f) of Article I, paragraphs (f) and (g) of Article V, and paragraph (f) of Article VI, submitted on November 10, 1976.

(ii) (A)–(C) [Reserved]

(D) Rules 312 (B) and (C), and 401 (D.1) and (D.2).

(7) Kern County APCD.

(i) Rule 417(I)(A), submitted on November 10, 1976.

(8) Madera County APCD.

(i) Rules 416.1(e)(1), (e)(3), and (e)(4), submitted on January 10, 1975.

(ii) Rule 416.1(c)(1), submitted on June 30, 1972, and previously approved under 40 CFR 52.223 (37 FR 19812).

(9) Mariposa County APCD.

(i) Rules 302(C), 304, 319, and 322, submitted on June 6, 1977.

(10) Mendocino County APCD.

(i) Rule 410(c)(2) and the following portions of Regulation 2: General prohibitions (all of page 1), paragraph (f) of Article I, paragraphs (f) and (g) of Article V, and paragraph (f) of Article VI, submitted on November 10, 1976.

(11) Merced County APCD.

(i) Rule 416(h), submitted on August 2, 1976.

(ii) Rules 416.1(III)(A), (V)(A), (V)(B), (V)(C), and (V)(D), submitted on August 2, 1976. (Rule 416.1(c)(2), submitted on June 30, 1972, and previously approved, is retained. Rule 416.1(a)(1), submitted on June 30, 1972, and previously approved, is retained for the purpose of enforcing Rule 416.1(c)(2).)

(12) Monterey Bay Unified APCD.

(i) Rules 409(a), 409(a)(5), and 410(b)(1), submitted on January 10, 1975.

(13) Nevada County APCD.

(i) Rules 302(C), 307, 314, and 322, submitted on April 10, 1975.

(ii) Rules 304 and 319, submitted on June 6, 1977.

(iii) Rule 307, submitted on October 15, 1979.

(14) Northern Sonoma County APCD.

(i) Rule 410(c)(2) and the following portions of Regulation 2: General prohibitions (all of page 1), paragraph (f) of Article I, paragraphs (f) and (g) of Article V, and paragraph (f) of Article VI, submitted on November 10, 1976.

(15) Placer County APCD.

(i) Rules 302(C), 302(G), 304, 307, 314, 319, and 322, submitted on October 13, 1977.

(ii) Rules 303, 306, and 322, submitted on October 15, 1979.

(16) Plumas County APCD.

(i) Rule 314, submitted on January 10, 1975.

(ii) Rules 302(C), 304, 307, 319, and 322, submitted on June 6, 1977.

(17) Sacramento County APCD.

(i) Rule 96(a), submitted on November 10, 1976.

(ii) Rule 96(a), submitted on November 4, 1977.

(18) San Joaquin County APCD.

(i) Rule 402(e), submitted on November 10, 1976.

(ii) Rule 416.1(c)(1), submitted on June 30, 1972, and previously approved under 40 CFR 52.223 (37 FR 19812).

(iii) Rules 416.1(D)(1) and (D)(2), submitted on October 23, 1974.

(19) Santa Barbara County APCD.

(i) Rules 40(4)(a) and 40(4)(1), submitted on July 25, 1973. (The analogous Rules 40(4)(a) and 40(4)(g), previously approved in the February 21, 1972 submittal, are retained.) Rule 40(4)(c), submitted on July 25, 1973, is also disapproved.

(ii) Rule 22, submitted on January 22, 1974. (The analogous Rule 22, previously approved in the February 21, 1972 submittal, is retained.) Rules 24.1 and 24.2, submitted on January 22, 1974, are also disapproved.

(20) Shasta County APCD.

(i) Rule 2:6, sections (1)(b)(iii) (a, b, and d), (1)(c)(viii), 2(c), 3(f), 4(e), 5(c), and 5(d). (Previously approved Rule 2:6, sections (2)(c), (3)(f), and (4)(e), submitted on July 19, 1974, are retained.)

(21) Sierra County APCD.

(i) Rules 302(C), 319, and 322, submitted on June 6, 1977.

(22) Trinity County APCD.

(i) Rule 410(c)(2) and the following portions of Regulation 2: General prohibitions (all of page 1), paragraph (f) of Article I, paragraphs (f) and (g) of Article V, and paragraph (f) of Article VI, submitted on November 10, 1976.

(23) Tulare County APCD.

(i) Rule 402(e), submitted on November 10, 1976.

(ii) Section 417(III)(A), submitted on June 30, 1972, and previously approved under 40 CFR 52.223 (37 FR 19812).

(iii) Section 417.1(e)(1), (e)(3), and (e)(4), submitted on January 10, 1975.

(24) Tuolumne County APCD.

(i) Rule 322, submitted on February 10, 1977.

(25) Yolo-Solano APCD.

(i) Rules 2.8(c) (4) and (5), 6.3, and 6.5(a), submitted on July 25, 1973.

(ii) Rules 6.1(a), (e)(6), and (g), submitted on January 10, 1975. (Rules 4.1 (a) and (g), submitted on February 21,

1972, and previously approved under 40 CFR 52.223, are retained.)

(b) The following rules or portions of rules are disapproved because they relax the control on open burning (including agricultural burning) without accompanying analyses demonstrating that these relaxations will not interfere with the attainment and maintenance of the National Ambient Air Quality Standards:

(1) Del Norte County APCD.

(i) Regulation 2, Article I, paragraph (e), submitted on November 10, 1976.

(ii) Rule 410(c)(2), submitted on May 7, 1979.

(2) Fresno County APCD.

(i) Rule 416.1(c)(1), submitted on October 23, 1974.

(ii) Rule 416.1(g), submitted on November 4, 1977.

(3) Humboldt County APCD.

(i) Regulation 2, Article I, paragraph (e), submitted on November 10, 1976.

(ii) Rule 410(c)(2), submitted on May 7, 1979.

(4) Imperial County APCD.

(i) Rule 422, submitted on November 4, 1977. (The requirements of Rule 115, submitted on February 21, 1972, and previously approved under 40 CFR 52.223, are retained as applicable to the burning of wood waste.)

(ii) Regulation VII (Rules 701 to 706), submitted on November 4, 1977. (Regulation VII (Rules 200 to 206), submitted on July 25, 1973 and previously approved under 40 CFR 52.223, is retained.)

(5) Kings County APCD.

(i) Rules 416.1 and 417.1, submitted on November 4, 1977.

(6) Lake County APCD.

(i) Sections 435, 436, 1003, and 1200(A), submitted on February 10, 1977.

(ii) Section 435, submitted on January 2, 1979.

(7) Los Angeles County APCD.

(i) Rule 444, submitted on June 6, 1977. (Rules 57.1, 57.2, 57.3, and 57.4, submitted on June 30, 1972, and previously approved under 40 CFR 52.223, are retained.)

(8) Madera County APCD.

(i) Rule 416.1(c)(1), submitted on January 10, 1975.

(9) Mendocino County APCD.

(i) Regulation 2, Article I, paragraph (e), submitted on November 10, 1976.

(ii) Rule 410(c)(2), submitted on May 7, 1979.

(10) Merced County APCD.

(i) Rule 416.1(I)(A)(2), submitted on August 2, 1976.

(11) Northern Sonoma County APCD.

(i) Regulation 2, Article I, paragraph (e), submitted on November 10, 1976.

(ii) Rule 410(c)(2), submitted on May 7, 1979.

(12) San Bernardino County Desert APCD.

(i) Rule 444 and the definition of "Agricultural Burning" in Rule 102, submitted on November 4, 1977. (Rule 57, submitted on February 21, 1972, and previously approved under 40 CFR 52.223, is retained.)

(13) San Diego County APCD.

(i) Rules 102(e) and 103(g), submitted on October 13, 1977.

(14) San Luis Obispo County APCD.

(i) Rule 501(B), submitted on November 10, 1976, and Rule 501(A)(7), submitted on November 4, 1977. (Previously approved Rule 115(2), submitted on February 21, 1972, is retained.)

(15) Santa Barbara County APCD.

(i) Rules 2(b), 40(3), and 40(4)(e), submitted on July 25, 1973. (Analogous Rules 2(b), 40(3), and 40(4)(c), submitted on February 21, 1972, and previously approved, are retained.)

(16) Shasta County APCD.

(i) Rule 2:8, submitted on October 13, 1977. (Rule 2:8, submitted on July 19, 1974, and July 22, 1975, and previously approved, is retained.)

(17) Siskiyou County APCD.

(i) Rule 4.3(2), submitted on January 2, 1979.

(18) Trinity County APCD.

(i) Regulation 2, Article I, paragraph (e), submitted on November 10, 1976.

(ii) Rule 410(c)(2), submitted on May 7, 1979.

(19) Placer County APCD.

(i) Rule 316, submitted on August 21, 1979.

(ii) Rules 318 and 323, submitted on October 15, 1979.

[42 FR 41122, Aug. 15, 1977]

EDITORIAL NOTE: For FEDERAL REGISTER citations affecting § 52.273, see the List of CFR Sections Affected, which appears in the Finding Aids section of the printed volume and on GPO Access.

§ 52.274 California air pollution emergency plan.

(a) Since the California Air Pollution Emergency Plan does not provide complete, implementable provisions for taking emission control actions necessary to prevent ambient pollutant concentrations from reaching significant harm levels, the requirements of subpart H of this chapter for Priority I and II areas are not met, except in the following areas:

(1) South Coast Air Quality Management District (SCAQMD).

(2) Sacramento County Air Pollution Control District.

(3) Monterey Bay Unified APCD (MBUAPCD).

(4) Santa Barbara Air Quality Management Area portion of the Santa Barbara County Air Pollution Control District.

(5) Bay Area Air Quality Management District.

(6) Ventura County Air Pollution Control District.

(7) San Diego County APCD.

(8) Los Angeles County Air Pollution Control District.

(9) Riverside County Air Pollution Control District.

(10) San Bernardino County Desert Air Pollution Control District.

(11) Imperial County Air Pollution Control District.

(12) Fresno County Air Pollution Control District.

(13) Kern County Air Pollution Control District.

(b) The requirements of subpart H of this chapter are met in the SCAQMD with the following exceptions: SCAQMD Regulation VII has no schedule to assure that the emission control actions are fully implementable; does not provide specific emission control actions for interdistrict coordination; has no provisions for nitrogen dioxide, particulate matter, and sulfur dioxide and particulate matter combined episodes; has no criteria or provisions to protect the eight-hour averaged carbon monoxide significant harm level; and has no provisions for implementation of abatement plans for stage 2 or 3 carbon monoxide or oxidant episodes that are attained without being predicted.

(c) Regulation for prevention of air pollution emergency episodes—plan scheduling, interdistrict coordination, episode criteria, and declaration.

(1) The requirements of this paragraph are applicable in the SCAQMD.

(2) The owner or operator of any governmental, industrial, business, or commercial activity listed in Rules 708.1 and 708.3 of Regulation VII of the SCAQMD, as revised on May 6, 1977, shall submit a Stationary Source Curtailment Plan and/or Traffic Abatement Plan to the Administrator within sixty days after the effective date of this paragraph.

(3) The plans submitted pursuant to the requirements of this paragraph, shall be reviewed by the Administrator for approval or disapproval according to the following schedule:

(i) For sources with emissions of hydrocarbons (HC) or nitrogen oxides (NO_X) greater than or equal to 454 metric tons (500 tons) per year, or for establishments employing 400 or more employees per shift, within 45 days after receipt.

(ii) For sources with emissions of HC or NO_X greater than or equal to 91 metric tons (100 tons) per year and less than 454 metric tons (500 tons) per year, or for establishments employing more than 200 and less than 400 employees per shift, within 90 days after receipt.

(iii) For sources or establishments other than those addressed in paragraphs (c)(3) (i) through (ii) of this section, within 180 days after receipt.

(4) The owner or operator of an industrial, business, governmental or commercial establishment required to submit a plan by this paragraph shall be notified by the Administrator within thirty days after the plan has been evaluated if the plan is disapproved. Any plan disapproved by the Administrator shall be modified to overcome the disapproval and resubmitted to the Administrator within 30 days of the receipt of the notice of disapproval.

(5) In the event specific sources or source areas within the SCAQMD are determined to significantly contribute to a declared air pollution episode in a nearby Air Pollution Control District, emission control actions specified in Regulation VII of the SCAQMD, as revised on May 6, 1977, for that declared episode stage shall be taken in the SCAQMD to abate that episode.

(6) For the purposes of this paragraph, the following episode criteria shall apply to carbon monoxide concentrations averaged over eight hours:

(i) For stage 1, 15 parts per million.

(ii) For stage 2, 30 parts per million.

(iii) For stage 3, 40 parts per million.

(7) The provisions of SCAQMD Regulation VII, as revised on May 6, 1977, relating to carbon monoxide episodes averaged over 12 hours shall apply to carbon monoxide episodes averaged over 8 hours except that the Administrator shall provide for declaration, notification, source inspections, and termination of the episodes.

(8) Whenever the Administrator has determined that the stage 2 or 3 episode level for oxidant or carbon monoxide as specified in Rule 703 of Regulation VII of the SCAQMD, as amended May 6, 1977, is being attained or has been attained, and is predicted to remain at such level for 12 or more hours, or increase, or in the case of oxidant to reoccur within the next 24 hours, unless control actions are taken, the existence of the appropriate episode level and the location of the source-receptor areas shall be declared, and the actions specified in Rules 710(b)(1), 710(b)(2), 711(b)(1), or 711(b)(2) shall be taken by the Administrator.

(d) Regulation for prevention of air pollution emergency episodes—nitrogen dioxide, particulate matter, and sulfur dioxide and particulate matter combined.

(1) The requirements of this paragraph are applicable in the SCAQMD.

(2) For the purposes of this regulation the following definitions apply:

(i) "Ppm" means parts per million by volume.

(ii) "COH" means coefficient of haze.

(iii) "Ugm^3" means micrograms per cubic meter.

(iv) "Administrator" means the Administrator of the Environmental Protection Agency or his authorized representative.

(v) "Major National Holiday" means a holiday such as Christmas, New Year's Day, or Independence Day.

(vi) "Source/Receptor Areas" are defined for each episode occurrence based on air monitoring, geographical, and meteorological factors: Source area is that area in which contaminants are discharged and a receptor area is that area in which the contaminants accumulate and are measured.

(vii) "Air Contaminants" means nitrogen dioxide, particulate matter, and/or sulfur dioxide and particulate matter combined.

(3) For the purposes of this regulation, the following episode criteria shall apply:

Contaminants	Averaging time (hours)	Stage 1	Stage 2	Stage 3
Nitrogen dioxide	1	0.6 ppm	1.2 ppm	1.6 ppm.
	24	0.15 ppm	0.3 ppm	0.4 ppm.
Particulate matter	24	3.0 COH	5.0 COH	7.0 COH.
	24	375 ugm^{-3}	625 ugm^{-3}	875 ugm^{-3}.
Sulfur dioxide and particulate matter combined	24	0.2[1]	0.8[1]	1.2[1].
	24	65,000[2]	261,000[2]	393,000[2].

[1] Product of sulfur dioxide (ppm) and particulate matter (COH).
[2] Product of sulfur dioxide (ugm^{-3}) and particulate matter (ugm^{-3}).

(4) Whenever the Administrator has determined that any episode level specified in paragraph (d)(3) of this section is being attained or has been attained, and is predicted to remain at such level for 12 or more hours, or increase, unless control actions are taken, the existence of the appropriate episode level and the location of the source-receptor areas shall be declared.

(5) Whenever the available scientific and meteorological data indicate that any episode level declared by paragraph (d)(4) of this section is no longer occurring and is not predicted to immediately increase again to episode levels, such episode shall be declared terminated.

(6) The following shall be notified by the Administrator whenever an episode is predicted, attained or terminated: (i) Public officials; (ii) persons operating any facility or activity named in paragraph (d)(8) of this section; (iii) public

health, safety, and emergency agencies; (iv) news media.

(7) Upon request of the Administrator, persons operating any facility or activity named in paragraph (d)(8) of this section shall install, properly maintain, and operate radio-receiving equipment with decoding device capable of receiving broadcasts of the declaration and termination of episodes required under this paragraph and instructions as to the actions to be taken.

(8) Stationary source curtailment plans and traffic abatement plans shall be prepared by industrial, business, commercial, and governmental establishments as follows:

(i) The owner or operator of any industrial, business, commercial, or governmental activity listed below shall submit to the Administrator plans to curtail operations causing stationary source air contaminants in such activity:

(A) Petroleum refinery emitting 23 metric tons (25 tons) or more per year of air contaminants.

(B) Metal-melting plant requiring molten metal temperatures in excess of 540 °C (1,000 °F) or metal-refining plant or metal-smelting plant, in which a total of 1,135 kilograms (2,500 pounds) or more of metal are in a molten state at any one time or are poured in any 1 hour.

(C) Fossil fuel-fired electric generating facility having a total rated capacity of 50 megawatts or more.

(D) Any facility or plant emitting 91 metric tons (100 tons) or more per year of air contaminants.

(ii) The plans required by paragraph (d)(8)(i) of this section shall include the following:

(A) A list of equipment which emits nitrogen oxides, particulate matter, and/or sulfur dioxide, including the SCAQMD permit number, the daily amount of air contaminants emitted, and a statement of the minimum time and recommended time to implement the abatement actions for each episode stage for the equipment listed and the percent reduction in emissions at each episode stage.

(B) The total number of employees at the facility during each shift on a normal weekday and on a major national holiday.

(C) The normal amount of electricity used on a normal weekday and on a major national holiday.

(D) The actions to inform employees of the procedures to be taken in the event of an episode declaration.

(E) The name and telephone numbers of the facility's episode action coordinator and alternate, who are responsible for implementation of the plan.

(F) For stage 1 episodes:

(*1*) The measures to voluntarily curtail equipment emitting air contaminants.

(*2*) The measures to curtail or postpone electrically intensive industrial operations, where feasible.

(*3*) The measures for electric utilities to import power from outside the basin to the extent feasible.

(G) For stage 2 episodes:

(*1*) The measures to curtail as much as possible, without upsetting production, equipment operations which emit air contaminants.

(*2*) The measures to postpone operations which can be postponed until after the episode.

(*3*) For fossil fuel-fired combustion sources, including electric utilities, with a heat input greater than 50 million BTU per hour:

(*i*) The measures to burn natural gas.

(*ii*) To the extent that natural gas is not available, the measures to burn fuel oil with a sulfur content of not more than 0.25 percent by weight or the measures to reduce air contaminant emissions to equivalent discharge. Any combustion source may be exempt from the provisions of this paragraph upon demonstration that fuel oil with the specified sulfur content is not available.

(*4*) For electric utilities the measures, in addition to those in paragraph (d)(8)(ii)(F)(*3*) of this section, to:

(*i*) Shift oil burning power generation to non-source areas to the maximum extent consistent with the public health, safety, and welfare.

(*ii*) Shift oil burning power generation to combined cycle gas turbine generating equipment burning fuel oil containing less than 0.15 percent sulfur to the maximum extent consistent with the public health, safety, and welfare.

(*5*) For refineries and chemical plants the measures to be taken to reduce air contaminant emissions by 20 percent without jeopardizing the public health or safety, without causing an increase in the emissions of other air contaminants, withoutdamaging the equipment or without reducing production by more than 20 percent.

(*6*) The measures in paragraph (d)(8)(ii)(F) of this section.

(H) For stage 3 nitrogen dioxide episodes:

(*1*) The measures for petroleum refineries to reduce emissions of nitrogen dioxide by 33 percent, without damaging the equipment or increasing the emissions of other air contaminants.

(*2*) The measures in paragraph (d)(8)(ii)(G) of this section.

(*3*) A list of equipment and the permit numbers of such equipment not operated on a major national holiday.

(*4*) A statement as to whether or not the facility operates on a major national holiday.

(I) For stage 3 particulate matter episodes:

(*1*) The measures for petroleum refineries to reduce emissions of particulate matter by 33 percent, without damaging the equipment or increasing the emissions of other air contaminants.

(*2*) The measures described in paragraph (d)(8)(ii)(G) of this section.

(*3*) The measures for any facility or plant, except electrical generating facilities and petroleum refineries, normally emitting 91 metric tons (100 tons) or more per year of particulate matter to eliminate such emissions by starting no new batches, by ceasing feed of new materials, and by phasing down as rapidly as possible without damage to the equipment.

(*4*) The measures for metal melting, refining, or smelting plants to eliminate emissions of particulate matter by starting no new batches, by ceasing feed of new materials, and by phasing down as rapidly as possible without damage to the equipmen

(J) For stage 3 sulfur dioxide and particulate matter combined episodes:

(*1*) The measures described in paragraphs (d)(8)(ii) (G) and (I) of this section.

(*2*) The measures for petroleum refineries to reduce emissions of sulfur dioxide by 33 percent, without damaging the equipment or increasing the emissions of other air contaminants.

(*3*) The measures for any facility or plant, except electrical generating facilities and petroleum refineries, normally emitting 91 metric tons (100 tons) or more per year of sulfur dioxide to eliminate such emissions by starting no new batches, by ceasing feed of new materials, and by phasing down as rapidly as possible without damage to the equipment.

(K) An estimate of the resultant reduction in air contaminant emissions.

(iii) The owner or operator of any industrial, business, commercial, or governmental activity listed below shall submit to the Administrator plans to curtail or cease operations causing air contaminants from vehicle use:

(A) Operators of 50 or more fleet vehicles.

(B) Industrial, business, commercial, or governmental establishments employing more than 100 persons per shift at one business address.

(iv) The plans required by paragraph (d)(8)(iii) of this paragraph shall include the following:

(A) The total number of employees at the facility during each shift on a normal weekday and on a major national holiday.

(B) The number of motor vehicles and vehicle miles traveled for motor vehicles operated:

(*1*) By the company on company business on a normal weekday and on a major national holiday.

(*2*) By employees commuting from home to the place of business on a normal weekday and on a major national holiday.

(C) The number of parking spaces used on a normal weekday and on a major national holiday.

(D) The minimum number of motor vehicles to be operated that are necessary to protect public health or safety.

(E) The actions to inform employees of the procedures to be taken in the event of an episode declaration.

(F) The name and telephone numbers of the facility's episode action coordinator and alternate, who are responsible for implementation of the plan.

(G) For stage 1 episodes, the methods by which employers will encourage the utilization of car pools or otherwise reduce employee motor vehicle travel.

(H) For stage 2 and 3 episodes, the measures within the reasonable control of the employer to reduce the number of vehicle miles driven by employees in commuting to and from work.

(I) An estimate of the reduction in vehicle miles traveled as a result of the measures in this paragraph.

(v) Each owner or operator required to submit a plan by this paragraph shall submit to the Administrator such plan within 60 days of the effective date of this paragraph.

(vi) The plans submitted in accordance with the provisions of this paragraph shall be approved or disapproved by the Administrator according to the following schedule:

(A) For sources with emissions of air contaminants greater than or equal to 454 metric tons (500 tons) per year, or for establishments employing 400 or more employees per shift, within 45 days after receipt.

(B) For sources with emissions of air contaminants greater than or equal to 91 metric tons (100 tons) per year and less than 454 metric tons (500 tons) per year, or for establishments employing more than 200 and less than 400 employees per shift, within 90 days after receipt.

(C) For sources with emissions of air contaminants less than 91 metric tons (100 tons) per year, or for establishments employing 100 to 200 employees per shift, within 180 days after receipt.

(vii) The owner or operator required to submit a plan by this paragraph shall be notified by the Administrator within 30 days after the plan has been evaluated if the plan is disapproved. Any plan disapproved by the Administrator shall be modified to

(viii) A copy of the plan approved in accordance with the provisions of this paragraph shall be on file and readily available on the premises to any person authorized to enforce the provisions of this section.

(9) The following actions shall be taken in the source and receptor areas upon declaration of a stage 1 episode:

(i) The notifications required by paragraph (d)(6) of this section.

(ii) The Administrator shall advise the public that those individuals with special health problems should follow the precautions recommended by their physicians and health officials.

(iii) The Administrator shall advise school officials to cancel, postpone, or reschedule programs which require outdoor physical activity.

(iv) The Administrator shall request the public to stop all unnecessary driving.

(v) The Administrator shall request the public to operate all privately owned vehicles on a pool basis.

(vi) Persons operating any facility or activity named in paragraph (d)(8) of this section shall implement the appropriate plans specified in paragraph (8) for the declared stage 1 episode and air contaminant(s).

(10) The following actions shall be taken in the source and receptor areas upon declaration of a stage 2 episode:

(i) The actions described in paragraphs (d)(9) (i) through (v) of this section.

(ii) The Administrator shall request suspension of programs that involve physical exertion by participants using public parks or public recreational facilities located in receptor areas.

(iii) The burning of combustible refuse shall be postponed until the episode has been terminated.

(iv) The Administrator shall request the public to reduce the use of electricity by 10 percent.

(v) Persons operating any facility or activity named in paragraph (d)(8) of this section shall implement the appropriate plans specified in paragraph (d)(8) of this section for the declared stage 2 episode and air contaminant(s).

(11) The following actions shall be taken in the source and receptor areas upon declaration of a stage 3 episode:

(i) The actions described in paragraphs (d)(10) (i) through (iii) of this section.

(ii) The Administrator shall request the public to reduce the use of electricity by 40 percent.

(iii) Persons operating any facility or activity named in paragraph (d)(8) of this section shall implement the appropriate plans specified in paragraph (d)(8) of this section for the declared stage 3 episode and air contaminant(s).

(iv) For nitrogen dioxide, the general public, schools, industrial, business, commercial, and governmental activities throughout the District shall operate as though the day were a major national holiday.

(v) For particulate matter and/or sulfur dioxide and particulate matter combined, the Administrator shall request the public to reduce as much as possible activities causing dust emissions including agricultural operations, off-road vehicle use, anddriving on unpaved roads. Construction and demolition operation shall be postponed until the episode has been terminated.

(12) In the event specific sources or source areas within the SCAQMD are determined to significantly contribute to a declared air pollution episode in a nearby Air Pollution Control District, emission control actions specified in this paragraph for that declared episode stage shall be taken in the SCAQMD to abate that episode.

(13) A source inspection plan shall be implemented by the Administrator upon the declaration of any episode stage.

(14) The Administrator shall provide for daily acquisition of forecasts of atmospheric stagnation conditions during any episode stage and updating of such forecasts at least every 12 hours.

(15) Any source that violates any requirement of this section shall be subject to enforcement action under section 113 of the Act.

(16) All submittals or notifications required to be submitted to the Administrator by this section shall be sent to:

Environmental Protection Agency, Air and Hazardous Materials Division (A–4), Attn: Air Programs Branch, 215 Fremont Street, San Francisco, Calif. 94105.

(e) The requirements of subpart H of this chapter are met in the Sacramento County Air Pollution Control District with the following exceptions: There are no episode criteria levels, declaration procedures, notification procedures, source inspections, emission control actions or episode termination procedures for carbon monoxide episodes based on 4- and 8-hour averaging times; communication procedures for transmitting status reports and orders as to emission control actions to be taken during an episode stage are not provided for; there are no provisions for the inspection of those sources covered under Rule 122; there is no time schedule for the Air Pollution Control Officer to initiate the call for the submittal of individual abatement plans; the requirements for the content of the abatement plans are not sufficiently specific to ensure that adequate plans are submitted; no provisions exist for the daily acquisition of atmospheric stagnation conditions; a Priority II particulate matter episode contingency plan is not provided for in the regulation.

(f) Regulation for prevention of air pollution emergency episodes—4- and 8-hour carbon monoxide criteria levels, public announcement, source inspections, preplanned abatement strategies, acquisition of atmospheric stagnation forecasts.

(1) The requirements of this paragraph are applicable in the Sacramento County Air Pollution Control District.

(2) For the purposes of this regulation the following definitions apply:

(i) "Administrator" means the Administrator of the Environmental Protection Agency or his authorized representative.

(ii) "ppm" means parts per million by volume.

(iii) "ug/m^3" means micrograms per cubic meter.

(3) For the purposes of this paragraph, the following episode criteria shall apply:

Pollutant	Averaging time (hours)	Stage 1	Stage 2	Stage 3
Carbon monoxide	4	[1] 25	[1] 45	[1] 60
	8	[1] 15	[1] 30	[1] 40

[1] Parts per million by volume.

(4) The provisions of the Sacramento County Air Pollution Control District's Regulation IX, as submitted on November 4, 1977, relating to carbon monoxide episodes averaged over 1 hour shall apply to carbon monoxide episodes averaged over 4 and 8 hours except that the Administrator shall insure that declaration, notification, source inspections, and termination of such episodes will occur.

(5) Stationary source curtailment plans shall be prepared by business,

commercial, industrial, and governmental establishments as follows:

(i) The owner or operator of any business, commercial, industrial, or governmental facility or activity listed below shall submit to the Administrator plans to curtail or cease operations causing stationary source air contaminants in such activity:

(A) Stationary sources which can be expected to emit 100 tons or more per year of hydrocarbons or carbon monoxide.

(ii) The plans required by paragraph (f)(5)(i)(A) of this section shall include the following information:

(A) The information requested by Regulation IX, Rule 125, section d, as submitted to the EPA on November 4, 1977.

(B) The total number of employees at the facility during each shift on a normal weekday.

(C) The amount of energy (gas, fuel oil, and electricity) used on a normal weekday.

(D) For first-stage episodes, the measures to voluntarily curtail equipment emitting air pollutants.

(E) For second-stage episodes:

(*1*) The measures to curtail, as much as possible, equipment operations that emit air pollutants specific to the type of episode and, in the case of oxidant episodes, the equipment operations that emit hydrocarbons.

(*2*) The measures to postpone operations which can be postponed until after the episode.

(F) For third-stage episodes:

(*1*) A list of equipment, with permit numbers if applicable, which can be shut down without jeopardizing the public health or safety, and an estimate of the resultant reductions in air contaminant emissions.

(*2*) A list of all equipment, with permit numbers if applicable, which must be operated to protect the public health or safety, and an estimate of the air contaminant emissions from such equipment.

(iii) Copies of the stationary source curtailment plans approved in accordance with the provisions of this paragraph shall be on file and readily available on the premises to any person authorized to enforce the provisions of this paragraph.

(6) The owner or operator of any governmental, business, commercial, or industrial activity or facility listed in paragraph (f)(5) of this section shall submit a stationary source curtailment plan to the Administrator within 60 days after promulgation of final rulemaking.

(7) The plans submitted pursuant to the requirements of this paragraph shall be reviewed by the Administrator for approval or disapproval according to the following schedule:

(i) For sources with emissions of hydrocarbons and carbon monoxide greater than or equal to 454 metric tons (500 tons) per year, within 45 days after receipt.

(ii) For sources with emissions of hydrocarbons and carbon monoxide greater than or equal to 91 metric tons (100 tons) per year and less than 454 metric tons (500 tons) per year, within 90 days after receipt.

(iii) For sources with emissions of hydrocarbons and carbon monoxide less than 91 metric tons (100 tons) per year, within 180 days after receipt.

(8) The owner or operator of any industrial, business, governmental, or commercial establishment required to submit a plan by this paragraph shall be notified by the Administrator within 30 days after the plan has been evaluated. Any plan disapproved by the Administrator shall be modified to overcome the disapproval and resubmitted to the Administrator within 30 days of receipt of the notice of disapproval.

(9) A source inspection plan shall be implemented by the Administrator upon the declaration of any episode stage, and the following facilities shall be inspected to ensure compliance:

(i) Those sources covered under Rule 122, as submitted to the EPA on November 4, 1977, as appropriate.

(10) The Administrator shall insure that forecasts of atmospheric stagnation conditions during any episode stage and updating of such forecasts are acquired.

(11) Any source that violates any requirement of this regulation shall be subject to enforcement action under section 113 of the Clean Air Act.

(12) All submittals or notifications required to be submitted to the Administrator by this regulation shall be sent

to: Regional Administrator, Attn: Air and Hazardous Materials Division, Air Technical Branch, Technical Analysis Section (A–4–3) Environmental Protection Agency, 215 Fremont Street, San Francisco, CA 94105.

(g) Regulation for the prevention of air pollution emergency episodes—Priority II particulate matter emergency episode contingency plan.

(1) The requirements of this paragraph are applicable in the Sacramento County Air Pollution Control District.

(2) For the purposes of this paragraph the following episode criteria shall apply:

Pollutant	Averaging time (hours)	Stage 1	Stage 2	Stage 3
Particulate matter	24	[1] 375	[1] 625	[1] 875

[1] Micrograms per cubic meter.

(3) Whenever it is determined that any episode level specified in paragraph (g)(2) of this section is predicted to be attained, is being attained, or has been attained and is expected to remain at such levels for 12 or more hours, the appropriate episode level shall be declared.

(4) Whenever the available scientific and meteorological data indicate that any episode level specified in paragraph (g)(2) of this section is no longer being attained and is not predicted to increase again to episode levels, such episode shall be declared terminated.

(5) The following shall be notified whenever an episode is predicted, attained, or terminated:

(i) Public officials.

(ii) Public health, safety, and emergency agencies.

(iii) News media.

(h) The requirements of Subpart H of this chapter are met in the MBUAPCD which the following exceptions: There is no time schedule to assure that stationary source and traffic curtailment plans are submitted and reviewed in a timely manner; curtailment plans are not sufficiently specific; there are no provisions for the acquisition of forecasts of atmospheric stagnation conditions; and adequate mandatory emission control actions are not specified for Third-Stage oxidant episodes.

(i) Regulation for prevention of oxidant air pollution emergency episodes within the MBUAPCD.

(1) The requirements of this paragraph are applicable in the MBUAPCD.

(2) For the purposes of this regulation the following definitions apply:

(i) "Administrator" means the Administrator of the Environmental Protection Agency or his authorized representative.

(ii) "Major national holiday" means a holiday such as Christmas, New Year's Day or Independence Day.

(iii) "Regulation VII" in this paragraph means Regulation VII, "Emergencies", of the MBUAPCD, adopted May 25, 1977, and submitted to the Environmental Protection Agency as a revision to the California State Implementation Plan by the California Air Resources Board on November 4, 1977.

(3) The plans required by Rule 705(a) of Regulation VII shall include the following information in addition to that required in Rule 705(b) of Regulation VII, and shall be submitted and processed as follows:

(i) Stationary sources.

(A) The total number of employees at the facility during each shift:

(*1*) On a normal weekday.

(*2*) On a major national holiday.

(B) The amount and type of fuel used:

(*1*) On a normal weekday.

(*2*) On a major national holiday.

(C) For Third-Stage episodes:

(*1*) A list of equipment and the permit numbers of such equipment not operated on a major national holiday.

(*2*) A statement as to whether or not the facility operates on a major national holiday.

(ii) Indirect sources.

(A) The total number of employees at the facility during each shift:

(*1*) On a normal weekday.

(*2*) On a major national holiday.

(B) The number of motor vehicles and vehicle miles traveled for motor vehicles operated:

(*1*) By the company, on company business, on a normal weekday and on a major national holiday.

(*2*) By employees commuting between home and the place of business on a normal weekday and on a major national holiday.

(C) The number of parking spaces:

(*1*) Available.

(*2*) Normally used on a weekday.

(*3*) Normally used on a major national holiday.

(D) The minimum number of motor vehicles to be operated that are necessary to protect the public health or safety.

(E) For Third-Stage episodes, a statement as to whether or not the facility operates on a major national holiday.

(iii) Each owner or operator required to submit a plan as specified under Rule 705(a) of Regulation VII shall submit such plans within 60 days after promulgation of the final rulemaking.

(iv) The plans submitted in accordance with the provisions of this paragraph shall be approved or disapproved by the Administrator within 120 days after receipt.

(v) Each owner or operator required to submit a plan as specified under Rule 705(a) of Regulation VII shall be notified within 90 days after the Administrator's decision.

(vi) Any plan disapproved by the Administrator shall be modified to overcome this disapproval and resubmitted to the Administrator within 30 days of the notice of disapproval.

(vii) A copy of the plan approved in accordance with the provisions of this paragraph shall be on file and readily available on the premises to any person authorized to enforce the provisions of this section.

(4) The following actions shall be implemented by the Administrator upon declaration of a Third-Stage oxidant episode: the general public, schools, industrial, business, commercial, and governmental activities throughout the MBUAPCD shall operate as though the day were a major national holiday.

(5) The Administrator shall ensure the acquisition of forecasts of atmospheric stagnation conditions during any episode stage and updating of such forecasts.

(j)–(o) [Reserved]

(p) Regulation for prevention of air pollution emergency episodes—requirements for stationary source curtailment plans and particulate matter episodes.

(1) The requirements of this paragraph are applicable in the Los Angeles County, Riverside County, San Bernardino County Desert and Imperial County Air Pollution Control Districts.

(2) For the purposes of this regulation, the following definitions apply:

(i) "Administrator" means the Administrator of the Environmental Protection Agency or his authorized representative.

(ii) "ug/m^3" means micrograms per cubic meter.

(iii) "Major national holiday" means a holiday such as Christmas or New Year's Day.

(3) Stationary source curtailment plans shall be prepared by major stationary sources, as defined by section 169(1) of the Act:

(i) The plans required by this paragraph shall include the following information:

(A) The information requested in the California Air Resources Board's Criteria for Approval of Air Pollution Emergency Abatement Plans (Executive Order G–63).

(B) The total number of employees at the facility during each work shift on a normal weekday and on a major national holiday.

(C) The amount of energy (gas, fuel oil, and electricity) used on a normal weekday and on a major national holiday.

(D) For first-stage episodes:

(*1*) The measures to voluntarily curtail equipment emitting air pollutants.

(E) For second-stage episodes:

(*1*) The measures to curtail, as much as possible, equipment operations that emit air pollutants specific to the type of episode and, in the case of oxidant episodes, the equipment operations that emit hydrocarbons and nitrogen oxides.

(*2*) The measures to postpone operations which can be postponed until after the episode.

(F) For third-stage episodes:

(*1*) A list of equipment, with permit numbers if applicable, which can be shut down without jeopardizing the public health or safety, and an estimate of the resultant reductions in hydrocarbons, nitrogen oxides, and particulate matter emissions.

(*2*) A list of all equipment, with permit numbers if applicable, which must be operated to protect the public health or safety, and an estimate of the

hydrocarbons, nitrogen oxides and particulate matter emissions from such equipment.

(4) A copy of the stationary source curtailment plan approved in accordance with the provisions of this paragraph shall be on file and readily available on the premises to any person authorized to enforce the provisions of this paragraph.

(5) The owner or operator of any governmental, business, commercial, or industrial activity or facility listed in paragraph (p)(3) of this section shall submit a stationary source curtailment plan to the Administrator within 60 days after promulgation of final rulemaking.

(6) The plans submitted pursuant to the requirements of this paragraph shall be reviewed by the Administrator within 90 days.

(7) The owner or operator of any major stationary source required to submit a plan by this paragraph shall be notified by the Administrator within 30 days after the plan has been evaluated as to whether the plan has been approved or disapproved. Any plan disapproved by the Administrator shall be modified to overcome the disapproval and resubmitted to the Administrator within 30 days of receipt of the notice of disapproval.

(8) All submittals or notifications required to be submitted to the Administrator by this regulation shall be sent to:

Regional Administrator, Attn: Air and Hazardous Materials Division, Air Technical Branch, Technical Analysis Section (A–4–3), Environmental Protection Agency, 215 Fremont Street, San Francisco CA 94105.

(9) Any source that violates any requirement of this regulation shall be subject to enforcement action under section 113 of the Act.

(10) For the purposes of this regulation the following episode criteria shall apply to particulate matter episodes:

Pollutant	Averaging time (hours)	μg/m³		
		Stage 1	Stage 2	Stage 3
Particulate matter	24	375	625	875

(q) The requirements of Subpart H of this chapter are met in the Fresno County Air Pollution Control District, with the following exceptions: There are no episode criteria levels, declaration procedures, notification procedures, source inspection procedures, emission control actions, or episode termination procedures for carbon monoxide episodes based on 4- and 8-hour averaging times, or for particulate matter emergency episodes based on 24-hour averaging times; there is no time schedule to initiate the call for the submittal of individual abatement plans; the requirements for the content of the abatement plans are not sufficiently specific to ensure the adequate plans are submitted; there are no provisions for requiring abatement plans from operations which attract large numbers of motor vehicles with their related emissions; the Stage 3 photochemical oxidants (ozone) criterion level equals the Federal significant harm level; there are no provisions for adequate mandatory emission control actions.

(r) Regulation for prevention of air pollution emergency episodes—4- and 8-hour carbon monoxide criteria levels, mandatory emission control actions, preplanned abatement strategies, and a Priority I particulate matter emergency episode contingency plan.

(1) The requirements of this paragraph are applicable in the Fresno County Air Pollution Control District.

(2) For the purposes of this regulation the following definitions apply:

(i) "Administrator" means the Administrator of the Environmental Protection Agency or his authorized representative.

(ii) "ppm" means parts per million by volume.

(iii) "μg/m³" means micrograms per cubic meter.

(iv) "Major national holiday" means a holiday such as Christmas or New Year's Day.

(3) For the purposes of this regulation, the following episode criteria shall apply to carbon monoxide episodes:

Pollutant	Averaging time (hours)	Stage 1 (ppm)	Stage 2 (ppm)	Stage 3 (ppm)
Carbon monoxide	4	25	45	60
	8	15	30	40

(4) The provisions of the Fresno County Air Pollution Control District's Regulation VI, as submitted on October 23, 1974, relating to carbon monoxide episodes averaged over 1 hour shall apply to carbon monoxide episodes averaged over 4 and 8 hours except that the Administrator shall insure that declaration procedures, notification procedures, source inspections, and termination of such episodes occur.

(5) Stationary source curtailment plans and traffic abatement plans shall be prepared by business, commercial, industrial, and governmental establishments in Fresno County as follows:

(i) The owner or operator of any business, commercial, industrial, or governmental stationary source which can be expected to emit 100 tons or more per year of carbon monoxide, hydrocarbons, or particulate matter shall submit to the Administrator plans to curtail or cease operations causing stationary source air contaminants in such activity:

(ii) The plans required by paragraph (r)(5)(i) of this section shall include the following information:

(A) The information requested in the California Air Resources Board's "Criteria for Approval of Air Pollution Emergency Abatement Plans" (Executive Order G–63).

(B) The total number of employees at the facility during each shift on a normal weekday and on a major national holiday.

(C) The amount of energy (gas, fuel oil, and electricity) used on a normal weekday and on a major national holiday.

(D) For first-stage episodes, the measures to voluntarily curtail equipment emitting air pollutants.

(E) For second-stage episodes:

(*1*) The measures to curtail, as much as possible, equipment operations that emit air pollutants specific to the type of episode and, in the case of oxidant episodes, the equipment operations that emit hydrocarbons or nitrogen oxides.

(*2*) The measures to postpone operations which can be postponed until after the episode.

(F) For third-stage episodes:

(*1*) A list of equipment, with permit numbers if applicable, which can be shut down without jeopardizing the public health or safety, and an estimate of the resultant reductions in carbon monoxide, hydrocarbons, nitrogen oxides, and particulate matter emissions.

(*2*) A list of all equipment, with permit numbers if applicable, which must be operated to protect the public health or safety, and an estimate of the carbon monoxide, hydrocarbons, nitrogen oxides, and particulate matter emissions from such equipment.

(iii) The owner or operator of any industrial, business, commercial, or governmental facility or activity employing more than 100 persons per shift at any one business address shall submit to the Administrator plans to curtail or cease operations causing air contaminants from vehicle use.

(iv) The plans required by paragraph (r)(5)(iii) of this section shall include the following information:

(A) The information requested in the California Air Resources Board's "Criteria for Approval of Air Pollution Emergency Abatement Plans" (Executive Order G–63).

(B) The total number of employees at the facility during each shift.

(C) The total number of motor vehicles and vehicle miles traveled for motor vehicles operated:

(*1*) By the company on company business on a normal weekday and a major national holdiay.

(*2*) By employees commuting between home and the place of business on a normal weekday and a major national holiday.

(*3*) The minimum number of motor vehicles to be operated that are necessary to protect public health or safety.

(6) A copy of the stationary source curtailment and/or traffic abatement plans approved in accordance with the provisions of this paragraph shall be on file and readily available on the premises to any person authorized to enforce the provisions of this paragraph.

(7) The owner or operator of any governmental, business, commercial, or industrial activity or facility listed in paragraph (r)(5) of this section shall submit a stationary source curtailment plan and/or traffic abatement plan to

the Administrator within 60 days after promulgation of final rulemaking.

(8) The plans submitted pursuant to the requirements of this paragraph shall be reviewed by the Administrator for approval or disapproval according to the following schedule:

(i) For sources with emissions of hydrocarbons, carbon monoxide, or particulate matter greater than or equal to 454 metric tons (500 tons) per year, or for establishments employing 400 or more employees per shift, within 45 days after receipt.

(ii) For sources with emissions of hydrocarbons, carbon monoxide, or particulate matter greater than or equal to 91 metric tons (100 tons) per year and less than 454 metric tons (500 tons) per year, or for establishments employing more than 200 and less than 400 employees per shift, within 90 days after receipt.

(iii) For establishments employing 100 to 200 employees per shift, within 180 days after receipt.

(9) The owner or operator of any industrial, business, governmental or commercial establishment required to submit a plan by this paragraph shall be notified by the Administrator within 30 days after the plan has been evaluated as to whether the plan has been approved or disapproved. Any plan disapproved by the Administrator shall be modified to overcome the disapproval and resubmitted to the Administrator within 30 days of receipt of the notice of disapproval.

(10) Any source that violates any requirement of this regulation shall be subject to enforcement action under section 113 of the Act.

(11) All submittals or notifications required to be submitted to the Administrator by this regulation shall be sent to:

Regional Administrator, ATTN: Air and Hazardous Materials Division, Air Technical Branch, Technical Analysis Section (A–4–3), Environmental Protection Agency, 215 Fremont Street, San Francisco, CA 94105.

(12) For the purposes of this regulation the following episode criteria shall apply to particulate matter episodes and Stage 3 photochemical oxidants episodes:

Pollutant	Averaging time (hours)	μg/m³		
		Stage 1	Stage 2	Stage 3
Particulate matter	24	375	625	875
Photochemical oxidants ...	1	.....	.....	[1] 0.5

[1] Parts per million.

(13) The Fresno County Air Pollution Control District's Regulation VI, as submitted on October 23, 1974, relating to episodes for carbon monoxide and photochemical oxidants averaged over 1 hour, shall apply to particular matter episodes averaged over 24 hours, except that the Administrator shall insure that declaration procedures, notification procedures, source inspections, and termination of such episodes occur.

(14) The Administrator shall insure that the following actions will be taken in the source and receptor areas on the declaration of a Stage 1, Stage 2 or Stage 3 episode:

(i) For a Stage 1 or Stage 2 episode:

(A) Persons operating any facility or activity named in paragraph (r)(5) of this section shall implement the appropriate plans submitted in accordance with subparagraph (5) of the declared Stage 1 or Stage 2 episode for the appropriate air contaminant(s).

(ii) For a Stage 3 episode:

(A) The general public, schools, industrial, business, commercial, and governmental activities throughout Fresno County shall operate as though the day were a major national holiday.

[43 FR 22721, May 26, 1978]

EDITORIAL NOTE: For FEDERAL REGISTER citations affecting § 52.274, see the List of CFR Sections Affected, which appears in the Finding Aids section of the printed volume and on GPO Access.

§ 52.275 Particulate matter control.

(a) The following rules or portions of rules are retained because they control emissions of particulate matter, and because there is no demonstration that their deletion would not interfere with the attainment and maintenance of the national standards for particulate matter:

(1) Lake County APCD.

(i) Part III–50 and Part V–1B, submitted on October 23, 1974, and previously approved under 40 CFR 52.223.

(2) San Luis Obispo County APCD.

(i) Rule 113, submitted on February 21, 1972, and previously approved under 40 CFR 52.223.

(b) The following regulations are disapproved because they relax the control on particulate matter emissions without any accompanying analyses demonstrating that these relaxations will not interfere with the attainment and maintenance of the National Ambient Air Quality Standards.

(1) Amador County APCD.

(i) Rules 211 and 212, submitted on April 21, 1976. (Regulation V, Rules 13 and 14, submitted on June 30, 1972, and previously approved, are retained.)

(ii) Rules 207 and 212, submitted on October 13, 1977. (The analogous Rules 10 and 14 of Regulation V, submitted on June 30, 1972, and previously approved, are retained and shall remain in effect for Federal enforcement purposes.)

(2) Calaveras County APCD.

(i) Rule 211, submitted on October 13, 1977. (Rule 211, submitted on July 22, 1975, and previously approved, is retained and shall remain in effect for Federal enforcement purposes.)

(3) Del Norte County APCD.

(i) Rules 410(c)(7) and 420(e), submitted on November 10, 1976.

(ii) Rules 420(e) and (f), submitted on November 4, 1977.

(4) El Dorado County APCD.

(i) Rule 212, submitted on April 10, 1975, and Rule 211, submitted on August 2, 1976. (The analogous Rule 55, submitted on February 21, 1972, and previously approved, is retained and shall remain in effect for Federal enforcement purposes.)

(5) Humbolt County APCD.

(i) Rules 410(c)(7) and 420(e), submitted on November 10, 1976.

(ii) Rules 420(e) and (f), submitted on November 4, 1977.

(6) Mariposa County APCD.

(i) Rule 211, submitted on June 6, 1977. (Rule 211, submitted on January 10, 1975, and previously approved, is retained and shall remain in effect for Federal enforcement purposes.)

(7) Mendocino County APCD.

(i) Rule 410(c)(7), submitted on November 10, 1976.

(ii) Rules 420(e) and (f), submitted on November 4, 1977.

(8) Nevada County APCD.

(i) Rule 212, submitted on April 10, 1975, and Rule 211, submitted on April 21, 1976. (Rule 52.1, submitted on June 30, 1972, and previously approved, is retained and shall remain in effect for Federal enforcement purposes.)

(9) Northern Sonoma County APCD.

(i) Rule 420(e), submitted on November 10, 1976.

(ii) Rules 420(e) and (f), submitted on October 13, 1977.

(10) Placer County APCD.

(i) Rule 211, submitted on October 13, 1977. (The analogous Rule 61, submitted on June 30, 1972, and previously approved, is retained and shall remain in effect for Federal enforcement purposes.)

(ii) Rules 202, 207, and 211, submitted on October 15, 1979; and Section 61, and Rules 202 and 207, previously approved in the June 30, 1972, January 10, 1975, and October 13, 1977 submittals, are retained.

(11) Plumas County APCD.

(i) Rule 211, submitted on June 6, 1977. (The analogous Rule 211, submitted on January 10, 1975, and previously approved, is retained and shall remain in effect for Federal enforcement purposes.)

(12) San Luis Obispo County APCD.

(i) Rule 403, submitted on November 10, 1976.

(13) Sierra County APCD.

(i) Rule 211, submitted on June 6, 1977. (The analogous Rule 211, submitted on January 10, 1975, and previously approved, is retained and shall remain in effect for Federal enforcement purposes.)

(14) Trinity County APCD.

(i) Rules 410(c)(7) and 420(e), submitted on November 10, 1976.

(ii) Rules 420(e) and (f), submitted on November 4, 1977.

(c) The following regulations are disapproved because they relax the control on visible emissions without any accompanying analyses demonstrating that these relaxations will not interfere with the attainment and maintenance of the National Ambient Air Quality Standards or any other applicable requirement of the Clean Air Act.

(1) South Coast Air Quality Management District.

(i) Rule 401, submitted on January 12, 1999.

[43 FR 25675, June 14, 1978]

EDITORIAL NOTE: For FEDERAL REGISTER citations affecting § 52.275, see the List of CFR Sections Affected, which appears in the Finding Aids section of the printed volume and on GPO Access.

§ 52.276 Sulfur content of fuels.

(a) The following rules or portions of rules are disapproved since they represent a relaxation of previously submitted regulations and an adequate control strategy demonstration has not been submitted showing that the relaxation will not interfere with the attainment and maintenance of the National Ambient Air Quality Standards:

(1) North Central Coast Intrastate Region:

(i) Monterey Bay Unified APCD.

(A) Rule 412(a)(8), *Sulfur Content of Fuels,* submitted on October 23, 1974.

(b) The deletion of the following rules from the State implementation plan is disapproved since their deletion represents a relaxation of the control strategy, and an adequate demonstration showing that the relaxation will not interfere with the attainment and maintenance of the national ambient air quality standards has not been submitted:

(1) Southeast Desert Intrastate Region:

(i) Imperial County APCD.

(A) Rule 126, Sulfur Contents of Fuels, submitted on June 30, 1972 and previously approved under 40 CFR 52.223.

[42 FR 56606, Oct. 27, 1977, as amended at 43 FR 35695, Aug. 11, 1978]

§ 52.277 Oxides of nitrogen, combustion gas concentration limitations.

(a) The following rules are being retained to the extent that the new rules are less stringent than the previously approved rules:

(1) North Central Coast Intrastate Region:

(i) Monterey Bay Unified APCD.

(A) Rule 404(c) submitted on February 21, 1972 by the Monterey-Santa Cruz Unified APCD and previously approved as part of the SIP, is being retained for sources combusting gaseous fuels. Rule 404(c) will be in effect for Monterey and Santa Cruz Counties only. Rule 404(c), submitted on November 10, 1976 by the Monterey Bay Unified APCD, will only be in effect for sources combusting liquid or solid fuels with heat input rates greater than 1½ billion BTU per hour in the Monterey and Santa Cruz portions of the Unified APCD.

(B) Rule 408(b), submitted on February 21, 1972 by the San Benito County APCD and previously approved as part of the SIP, is being retained for sources combusting liquid, solid, or gaseous fuels with heat input rates less than 1½ billion BTU per hour. Rule 408(b) will be in effect for San Benito County only. Rule 404(c), submitted on November 10, 1976 by the Monterey Bay unified APCD, will only be in effect for sources combusting liquid, solid, or gaseous fuels with heat input rates greater than 1½ billion BTU per hour in the San Benito County portion of the Unified APCD.

[42 FR 56606, Oct. 27, 1977]

§ 52.278 Oxides of nitrogen control.

(a) The following regulations are disapproved because they relax the control of nitrogen oxides emissions without an accompanying analysis demonstrating that this relaxation will not interfere with the attainment and maintenance of the National Ambient Air Quality Standards.

(1) South central coast intrastate AQCR.

(i) San Luis Obispo County APCD.

(A) Rule 405(A)(1), *Nitrogen Oxides Emission Standards Limitations and Prohibitions* submitted on November 10, 1976, is disapproved; and Rule 114(4), *Gaseous Contaminants Oxides of Nitrogen* submitted on February 21, 1972 and previously approved in 40 CFR 52.223, is retained.

[43 FR 34467, Aug. 4, 1978]

§ 52.279 Food processing facilities.

(a) The following regulations are disapproved because they conflict with the requirements of 40 CFR Subpart I [formerly § 51.18], "Review of new sources and modifications," and relax the control on emissions from food processing facilities without any accompanying analyses demonstrating

that these relaxations will not interfere with the attainment and maintenance of the National Ambient Air Quality Standards.

(1) Merced County APCD Rules 210.1–II–J, 210.1–VII–F, 408–C (new sentences two and three), adopted on August 21, 1984, and submitted on October 5, 1984.

(2) Bay Area Air Quality Management District sections 2–2–119, 2–2–120. Adopted on September 19, 1984, and submitted on October 5, 1984.

[52 FR 3646, Feb. 5, 1987, as amended at 55 FR 31835, Aug. 6, 1990]

§ 52.280 Fuel burning equipment.

(a) The following rules and regulations are disapproved because they relax the control on emissions from fuel burning equipment without any accompanying analyses demonstrating that these relaxations will not interfere with the attainment and maintenance of the National Ambient Air Quality Standards.

(1) Mountain Counties Intrastate AQCR:

(i) Amador County APCD.

(A) Rules 209, submitted on April 21, 1976 and October 15, 1979, are disapproved; and Regulation V, Rule 19, previously approved in the June 30, 1972 submittal, is retained.

(B) Rule 210(B)(1), submitted on October 15, 1979, is disapproved; and Rules 11 and 210, previously approved in the June 30, 1972 and April 21, 1976 submittals, are retained.

(ii) Calaveras County APCD.

(A) Rule 209, Fossil Fuel-Steam Generator Facility, submitted on October 13, 1977, is disapproved; and Rule 408, Fuel Burning Equipment, previously approved in the June 30, 1972, submittal, is retained and shall remain in effect for Federal enforcement purposes.

(iii) Tuolumne County APCD.

(A) Rule 210, submitted on October 15, 1979, is disapproved; and Rule 407, previously approved in the June 30, 1972 submittal, is retained.

(iv) Placer County APCD.

(A) Rule 210, submitted on October 15, 1979, is disapproved, and Rule 210, previously approved in the October 13, 1977 submittal, is retained.

(2) Sacramento Valley Intrastate AQCR:

(i) Yolo-Solano APCD.

(A) Rule 2.16, *Fuel Burning Heat or Power Generators,* submitted on July 19, 1974 is disapproved; and Rule 2.16, *Fuel Burning Equipment,* submitted on June 30, 1972 and previously approved as part of the SIP in 40 CFR 52.223, is retained.

(3) Southeast Desert Intrastate AQCR.

(i) San Bernardino County Desert APCD.

(A) Rule 474, *Fuel Burning Equipment—Oxides of Nitrogen,* submitted November 4, 1977, is disapproved. Rule 68 (same title) submitted June 30, 1972 and approved in 40 CFR 52.223 is retained.

(b) The deletion of the following rules or portions of rules from the State implementation plan is disapproved since their deletion represents a relaxation of the control strategy and an adequate demonstration showing that the relaxation will not interfere with the attainment and maintenance of the national ambient air quality standards has not been submitted:

(1) Southeast Desert Intrastate Region:

(i) Imperial County APCD.

(A) Rule 131, Fuel Burning Equipment, submitted on February 21, 1972 and previously approved under 40 CFR 52.223.

(ii) San Bernardino County.

(A) Rule 67, Fuel Burning Equipment as applied to new sources. The emission limit of Rule 67 is retained and is applicable only to existing sources already granted a permit.

(c) The emission limits of Rules 67 and 72 are partially retained, applicable only to (existing) sources granted permits prior to June 17, 1981.

(1) South Coast Air Quality Management District.

(i) Rules 67, *Fuel Burning Equipment,* and 72, *Fuel Burning Equipment,* submitted on November 19, 1979.

[43 FR 25677, 25684 June 14, 1978, as amended at 43 FR 35696, Aug. 11, 1978; 43 FR 51774, Nov. 7, 1978; 43 FR 59490, Dec. 21, 1978; 44 FR 5664, Jan. 29, 1979; 46 FR 3889, Jan. 16, 1981; 46 FR 27116, 27118, May 18, 1981; 47 FR 25016, June 9, 1982]

§ 52.281 Visibility protection.

(a) The requirements of section 169A of the Clean Air Act are not met, because the plan does not include approvable procedures for protection of visibility in mandatory Class I Federal areas.

(b) Regulations for visibility monitoring. The provisions of § 52.26 are hereby incorporated and made part of the applicable plan for the State of California.

(c) Regulations for visibility new source review. The provisions of § 52.27 are hereby incorporated and made part of the applicable plan for the State of California only with respect to:

(1) Mendocino County air pollution control district,

(2) Monterey County air pollution control district,

(3) North Coast Unified air quality management district,

(4) Northern Sonoma County air pollution control district, and

(5) Sacramento County air pollution control district.

(d) The provisions of § 52.28 are hereby incorporated and made part of the applicable plan for the State of California, except for:

(1) Monterey County air pollution control district, and

(2) Sacramento County air pollution control district.

(e) *Long-term strategy*. The provisions of § 52.29 are hereby incorporated and made part of the applicable plan for the State of California.

[50 FR 28553, July 12, 1985, as amended at 52 FR 45138, Nov. 24, 1987]

Subpart G—Colorado

§ 52.320 Identification of plan.

(a) Title of plan: "Air Quality Implementation Plan for State of Colorado".

(b) The plan was officially submitted on January 26, 1972.

(c) The plan revisions listed below were submitted on the dates specified.

(1) Request for legal authority submitted February 14, 1972, by the Governor.

(2) Request for 110(e) extensions submitted March 20, 1972, by the Governor.

(3) Statements by State Air Pollution Control Commission (APCC) related to public inspection of emission data, emergency episodes, and transportation control submitted May 1, 1972, by the APCC. (Non-regulatory)

(4) List of sources under compliance schedules submitted May 1, 1972, by the State Department of Health.

(5) Transportation Control Plans submitted June 4, 1973, by the Governor.

(6) Statements relating to transportation control plans submitted July 16, 1973, by the Governor. (Non-regulatory)

(7) Plan revisions submitted November 21, 1973, by the Governor which delete Section III of Regulation No. 1 only as it relates to existing sources in Appendix P concerning SO_2.

(8) On June 7, 1974, the Governor submitted five Air Quality Maintenance Area designations.

(9) Supplemental information about the Air Quality Maintenance Areas was submitted by the Governor on January 29, 1975.

(10) Procedural rules for all proceedings before the Air Pollution Control Commission, submitted May 5, 1977, by the Governor.

(11) On January 2, 1979, the Governor submitted the nonattainment area plan for all areas designated nonattainment as of March 3, 1978. EPA is taking no action on areas for which the Governor has requested redesignations (Larimer-Weld TSP and ozone; El Paso County ozone).

(i) Regulation 9, "Trip Reduction," previously approved on October 5, 1979, and now deleted without replacement.

(12) Extension request for attainment of CO and O_3 was submitted by the Governor on January 5, 1979.

(13) On July 5, 1979, the governor submitted the Air Pollution Control Commission's final comment on our May 11, 1979, proposal. This included a clarification that the "No-Drive Day" was not part of the State Implementation Plan and transportation control measures schedules for Larimer-Weld.

(14) On July 18, 1979, the Commission committed to revising Regulation 7.

(15) On July 23, 1979, the Governor submitted House Bill 1090 and Senate Bill 1 as part of the plan.

(16) On July 27, 1979, the Governor submitted the Denver Regional Council of Governments schedules for implementing the transportation control

strategies, and clarified that the Transportation Development Plan was part of the plan.

(17) On March 4, 1980, the Governor submitted a plan revision to meet the requirements of Air Quality Monitoring 40 CFR part 58, subpart C, § 58.20.

(18) On May 29, 1980, the Governor submitted written evidence of the State's legal authority to implement and enforce an automobile emissions control program as well as schedules for implementing that program and a demonstration that it will achieve a 25% reduction in exhaust emissions by 1987.

(19) On January 22 and February 6, 1980 the Governor submitted schedules for the implementation of transportation control measures for Denver and Larimer-Weld elements of the State Implementation Plan, respectively.

(20) On April 21, 1980, the Governor submitted a plan revision to meet the data reporting requirements of section 127 of the Clean Air Act.

(21) On June 22, 1980, the Governor submitted the following amended rules:

REPEAL AND REPROMULGATION OF REGULATION NO. 3 "A Regulation Requiring Air Pollutant Emission Notice, Emission Permits and Fees."

REVISIONS TO COMMON PROVISIONS REGULATION as they relate to changes in Regulation No. 3.

(22) On June 5, 1980, the Governor submitted the following rules:

REPEAL AND REPROMULGATION OF REGULATION NO. 7 "A Regulations to Control Emissions of Volatile Organic Compounds" and revisions to the Common Provisions Regulations as they relate to changes in Regulation No. 7.

(23) On August 25, 1980, the Governor of Colorado submitted a site specific revision to the State Implementation Plan for Coors Container Corporation, Paper Packaging Division, in regard to alternative volatile organic compound emissions reduction for its printing presses.

(24) Provisions to meet the requirements of sections 110 and 172 of the Clean Air Act, as amended in 1977, regarding control of Group II VOC sources were submitted on January 6, 1981, and the supplemental information received on August 20, 1981.

(25) On December 29, 1980, the Governor submitted the following rule: Regulation No. 11, covering procedures for garage licensing (including mechanic testing and licensing), equipment requirements (including standards and specifications for exhaust gas analyzers), requirements for inspections, and emission standards as part of the Colorado motor vehicle inspection program.

(26) On March 23, 1981, the Governor submitted revised regulations limiting sulfur dioxide emissions from certain oil shale production facilities.

(27) On April 12, 1982, the Governor submitted the plan revisions to show attainment of the lead National Ambient Air Quality Standard.

(28) Regulation Number 7 is part of the plan.

(29) Provisions to meet the requirements of Part D of the Clean Air Act for carbon monoxide in Colorado Springs, Fort Collins, and Greeley and ozone in Denver were submitted on June 24, 1982, and supplemented by information submitted on May 4, 1983,by the Colorado Air Quality Control Commission.

(30) Revisions to Air Pollution Control Commission Regulation No. 1 related to fugitive particulate emissions, were submitted by the Governor on June 22, 1982; on December 6, 1982; and on March 23, 1983, with a technical clarification dated August 5, 1982. Included is approval of requirements for continuous emission monitoring (CEM) of sulfur dioxide on fossil fuel fired steam generator with greater than 250 million BTU per hour heat input. Also addressed is the reinstatement of the 40% opacity limitation for wigwam waste-wood burners into Regulation No. 1. With this is the addition of operation and maintenance (O&M) requirements to promote improved operation of the wigwam burners.

(i) Incorporation by reference

(A) Emission Control Regulations for Particulates, Smokes and Sulfur Oxides for the State of Colorado, Regulation No. 1.II (Smoke and Opacity); III (Particulates); IV (Continuous Emission Monitoring Requirements for Existing Sources; VII (Statements of Basis and Purpose); and Appendices A

and B; which were effective on May 30, 1982.

(B) Colorado Air Quality Control Commission Common Provisions Regulation which was effective on May 30, 1982.

(C) Letter of August 5, 1982, from the State of Colorado to EPA. Clarification of the SIP Re: Continuous Emission Requirements for Oxides of Sulfur from Fossil Fueled Steam Generators.

(31) Revisions to Air Pollution Control Commission Regulation No. 11 related to the Colorado Inspection and Maintenance (I/M) program for exhaust emission inspection of motor vehicles, submitted by the Governor on December 10, 1984.

(32) Revisions to Air Pollution Control Commission Regulation No. 1, section II.A.6 and III.C.2 (a) and (b), submitted by the Governor on April 9, 1985.

(i) Incorporation by reference.

(A) Revisions to Air Pollution Control Commission Regulation No. 1, "Emission Control Regulation for Particulates, Smokes, and Sulfur Oxides for the State of Colorado," sections II.A.6 and III.C.2 (a) and (b), effective March 2, 1985.

(33) A revision to Regulation No. 4, "Regulation on the Sale of New Woodstoves", to control emissions from new woodstoves was submitted by the Governor on October 24, 1986.

(i) Incorporation by reference

(A) Colorado Air Quality Control Commission Regulation No. 4, "Regulation on the Sale of New Woodstoves" (Section III.A., E., F., G. and Section VI.B. and C.) adopted June 27, 1985.

(34) [Reserved]

(35) Colorado Air Pollution Control Commission Regulation No. 4, "Regulation on the Sale of New Wood Stoves", submitted by the Governor on July 18, 1985.

(i) Incorporation by reference.

(A) Colorado Air Quality Control Commission Regulation No. 4., "Regulation on the Sale of New Wood Stoves", adopted June 27, 1985.

(36) "Revisions to Colorado Regulation No. 3 Requiring Air Contaminant Emission Notices, Emission Permits and Fees as it Relates to the Prevention of Significant Deterioration" and "Revisions to Common Provision Regulation as Related to Regulation 3." Changes submitted April 18, 1983, by the Governor.

(37) Supplemental information submitted on December 16, 1985, by the Colorado Department of Health concerning compliance with EPA's stack height regulations in issuing PSD permits.

(i) Incorporation by reference.

(A) Revisions to Regulation 3 and Common Provisions Regulation adopted March 10, 1983, by the Colorado Air Quality Control Commission.

(B) Supplemental information submitted on December 16, 1985, by the Colorado Department of Health concerning compliance with EPA's stack height regulation in issuing PSD permits.

(38) Revisions to Regulation 1 to control emissions from alfalfa dehydrators were submitted by the Governor on July 29, 1987.

(i) Incorporation by reference.

(A) Section II.A.6 and introductory text of Section III.C.2.a of Regulation 1 adopted by the Colorado Air Quality Control Commission on January 15, 1987, effective on March 2, 1987.

(39) Regulation 12, to control emissions from diesel fleets with nine or more vehicles over 7,500 pounds empty weight, registered in the AIR Program area (the Colorado I/M program), was submitted by the Governor on December 21, 1987.

(i) Incorporation by reference

(A) Colorado Air Quality Control Commission, Regulation No. 12, adopted December 18, 1986, and effective January 30, 1987.

(40) A revision to the Colorado SIP was submitted by the Governor on May 8, 1986, for Visibility New Source Review.

(i) Incorporation by Reference.

(A) Revision to the Colorado State Implementation Plan regarding Revision to Regulation No. 3, Section XIV was submitted by the Governor on April 18, 1983, and was adopted on March 10, 1983.

(B) Revision to the Colorado State Implementation Plan regarding Revision to Regulation No. 3, Section IV was submitted by the Governor on May 8, 1986, and was adopted on March 20, 1986.

(41) A revision to the SIP was submitted by the Governor on December 21, 1987, for visibility general plan requirements, monitoring, and long-term strategies.

(i) Incorporation by reference:

(A) Letter dated December 21, 1987, from Governor Roy Romer submitting the Colorado Visibility SIP revision.

(B) The visibility SIP revision, Regulation No. 3, "Regulation requiring an air contaminant emission notice, Emission Permit Fees", section XV, adopted by the Colorado Air Quality Control Commission on November 19, 1987.

(42) Revisions to Air Pollution Control Regulation No. 1, requiring reasonably available control technology RACT for carbon monoxide control on petroleum refinery catalytic cracking units were submitted by the Governor on May 8, 1986.

(i) Incorporation by reference.

(A) Revisions to Section IV., paragraphs IV.A., IV.D.2. and IV.E., and Section VII., Regulation No. 1, emission control regulations for particulates, smokes, carbon monoxide, and sulfur oxides for the State of Colorado requiring CEM and RACT on petroleum refinery catalytic cracking units in the metro Denver area effective on April 30, 1986.

(43) On June 15, 1988, the Governor submitted revisions to the CO SIP for Colorado Springs. The revisions contain a new measure, the Clean Air Campaign. EPA considers all other aspects of the submittal to be surplus.

(i) Incorporation by reference

(A) Clean Air Campaign portion of the Carbon Monoxide State Implementation Plan for the Colorado Springs urbanized area, revised August 12, 1987.

(44) A revision to Regulation No. 4 of the Colorado SIP which exempts certain woodburning devices from the certification requirements of Regulation No. 4 was submitted by the Governor of Colorado on September 10, 1988.

(i) Incorporation by reference. (A) In a letter dated September 10, 1988, Roy Romer, Governor of Colorado, submitted a revision to Regulation No. 4 of the Colorado SIP.

(B) Paragraph (I)(A)(10)–(13) and (II)(C), revisions to Regulation No. 4, "Regulation on the Sale of New Woodstoves," of the Colorado SIP became effective on June 30, 1988.

(45) In a letter dated May 8, 1986, the Governor submitted revisions to the Colorado Regulation No. 3 (Regulation Requiring an Air Contaminant Emission Notice, Emission Permit Fees) of the Colorado SIP modifying stack evaluations. The changes consisted of (1) new definitions of dispersion techniques, good engineering practice, nearby, and excessive concentrations (Section XII.D.) and (2) rules clarifying technical modeling and monitoring requirements (Section XII.C.).

(i) Incorporation by reference. (A) Revisions to the Colorado Regulation No. 3 (Regulation Requiring and Air Contaminant Emission Notice, Emission Permit Fees), Section XII, adopted March 20, 1986, by the Colorado Air Quality Control Commission.

(46) On July 29, 1987, the Governor submitted:

(1) Amendments to Colorado Regulation No. 11 (Inspection/Maintenance (I/M) program) and

(2) Regulation No. 13 (oxygenated fuels program).

(i) Incorporation by reference:

(A) Regulation No. 11, revised January 15, 1987, effective March 2, 1987.

(B) Regulation No. 13, adopted June 29, 1987, effective July 30, 1987.

(47) In a letter dated October 23, 1985, the Director of the Air Pollution Control Division submitted the stack height demonstration analysis. Supplemental information was submitted on June 20, 1986, December 4, 1986, February 3, 1987, March 3, 1988, March 15, 1988, July 6, 1988 and August 16, 1988.

(i) Incorporation by reference. Stack height demonstration analyses submitted by the State on October 23, 1985, June 20, 1986, December 4, 1986, February 3, 1987, March 3, 1988, March 15, 1988, July 6, 1988 and August 16, 1988.

(48) [Reserved]

(49) A revision to Regulation No. 4 of the Colorado SIP submitted on June 29, 1990, prohibits persons from operating a wood-burning stove or fireplace during a high pollution day in specified areas.

(i) Incorporation by reference.

(A) Revisions to Regulation No. 4, "Regulation on the Sale of New Woodstoves," effective on June 30, 1990.

(50) [Reserved]

(51) On June 29, 1990, the Governor of Colorado submitted revisions to the plan. The revisions include amendments to the Common Provisions Regulation and Regulation No. 3 for emission permit fees and prevention of significant deterioration of air quality (PSD) regulations to incorporate the nitrogen dioxide (NO_2) increments.

(i) *Incorporation by reference.* (A) Revisions to the Colorado Air Quality Control Regulations, Common Provisions Regulation and Regulation No. 3, which were effective on June 30, 1990.

(ii) *Additional material.* (A) October 22, 1990 letter from Douglas Skie, EPA, to Bradley Beckham, Director, Air Pollution Control Division.

(B) November 5, 1990 letter from Bradley Beckham, Director, Air Pollution Control Division, to Douglas Skie, EPA.

(52) [Reserved]

(53) Revisions to the Colorado State Implementation Plan were submitted by the Governor of Colorado on July 13, 1990. The revision adds a voluntary educational Better Air Campaign to the Ft. Collins Carbon Monoxide element of the Colorado SIP.

(i) Incorporation by reference.

(A) The Fort Collins Better Air Campaign as defined in Exhibit "A" and adopted on September 5, 1989, through Resolution 89–161.

(54) On November 17, 1988 the Governor submitted revisions to Regulation No. 3 and the Common Provisions Regulation which included:

Provisions for the review of new sources to protect the PM–10 national ambient air quality standards (NAAQS) and for consistency with EPA requirements;

Amendments to address deficiencies and previous EPA disapprovals as identified in the May 26, 1988 SIP Call;

Provisions for the certification and trading of emission offset credits; and

Amendments to increase permit processing and annual fees.

(i) Incorporation by reference.

(A) Regulation No. 3: Sections I.B.2.c.(i)–(vi), I.B.3.a., II.B.1.d & e, II.B.3.c., II.C.1.h., II.C.3., III.A.1., IV.C.4.e., IV.C.4.f.(i) & (iv)–(v), IV.C.6–10, IV.D.1.e., IV.D.2.a.(iv), IV.D.2.b., IV.D.2.c.(i) & (ii), IV.D.3.a.(vi), IV.D.3.b.(i)(D), IV.D.3.b.(iii)(A)(3), (5), (7), & (11), IV.D.3.d.(ii), IV.D.3.e., IV.G.3., IV.H.7., V.C–I, VI.A.2., VI.C.1., VI.D., VII.A., VIII.D., IX.K., XIII.B., XIV.B.1, XIV.B.4.c.; and the Common Provisions Regulation: Section I.G., definitions of "Best Available Control Technology," "Complete," "Construction," "Enforceable," "Fixed Capital Cost," "Lowest Achievable Emission Rate (LAER)," "Modification," Net Emissions Increase," "Particulate Matter," "Particulate Matter Emissions," "PM10," "PM10 Emissions," "Reconstruction," "Significant," "Total Suspended Particulate;" revised August 18, 1988, effective September 30, 1988.

(ii) Additional Material

(A) Letter dated April 29, 1991 from the Colorado Air Pollution Control Division to EPA.

(55) [Reserved]

(56) Revisions to the Colorado State Implementation Plan were submitted by the Governor in letters dated October 25, 1989, and October 30, 1991. The revisions consist of amendments to Regulation No. 12, "Reduction of Diesel Vehicle Emissions."

(i) Incorporation by reference.

(A) Regulation No. 12 revisions adopted on July 20, 1989, and effective on August 30, 1989, as follows: Part A (Diesel Fleet Self-Certification Program): I.B.2.; I.C.1.; I.D.; II.A.2.b., c.; all of IV. except those sections noted below; and add new Parts B (Diesel Opacity Inspection Program) and C (Standards for Visible Pollutants from Diesel Engine Powered Vehicles—Operating on Roads, Streets and Highways), except those sections noted below. Regulation No. 12 revisions adopted on September 19, 1991, and effective on October 30, 1991, as follows: Part A: I.A.; I.B.3–18.; I.C.2.; II.A.1.; II.A.2.d., f., g., III.A.; IV.A.2.; IV.C.1.c., g.; IV.C.2.c., h.; IV.C.3.f., i.; IV.C.4.k.; IV.C.5.a.iv.; IV.C.5.b.; V.; VI.; VII.; VIII.; Part B: I.B.2., 7., 19., 30.–37., 40., 50., 51.; I.C.2.; I.D.; I.E.3.; II.C.1.b.iv.; II.E.2.c., e.; II.E.8.; III.A.; III.B.4.; III.C.4.b.viii.–ix.; III.D.3.b.vi., xi.; III.D.3.c.viii., xiii.; V.; VI.; and Part C: A.–F.

(57) Revision to the State Implementation Plan for Carbon Monoxide: Greeley Element.

(i) Incorporation by reference.

(A) Letter and submittal dated November 25, 1987, from the Governor of

Colorado to the EPA Region VIII Administrator, to revise the SIP to include the Greeley Element. The revision was adopted by the State on September 17, 1987.

(58) On November 17, 1988, the Governor submitted an amendment to Colorado Regulation No. 1, Section II.A.9., to exempt the destruction of Pershing missiles under the Intermediate-Range Nuclear Forces (INF) Treaty from meeting the opacity limits.

(i) *Incorporation by reference.*

(A) Regulation No. 1, Section II.A.9., adopted September 15, 1988, effective October 30, 1988.

(59) Revisions to the State's new source review and prevention of significant deterioration permitting rules in the Common Provisions Regulation and Regulation No. 3, which were submitted by the Governor on April 9, 1992.

(i) Incorporation by reference.

(A) Regulation No. 3: Sections I.A., I.B.2.c. through e., I.B.3.e. and f., II.B.1., II.B.2., II.C., III.A.1., III.B., III.D., IV.B.2., IV.C.4., IV.C.7., IV.C.9, IV.D.1., IV.D.2.a.(ii) and (iv), IV.D.2.b.(i), IV.D.3.a.(iii) and (vi), IV.D.3.b.(iv), IV.H., IV.I., V.A., V.C.1., V.C.3., V.D.1., V.D.2., V.D.4., V.D.5., V.D.11., V.E.1., V.E.5., V.F.10., V.F.11., V.F.13., V.G.7., V.G.8., V.H.3., V.H.7. and 8., V.I.3., VI.A.1., VI.C.2., IX.D., XII.D., XIII.B.4., XIII.B.6., and XV.D.2.; and the Common Provisions Regulation: Sections I.D.2., I.F., II.C.1., II.C.4., IV., and Section I.G.- definitions of "best available control technology," "commenced construction," "complete," "federally enforceable," "modification," "potential to emit," "reasonable further progress," and "stationary source;" revised October 17, 1991, effective November 30, 1991.

(60) Revisions to the Long-Term Strategy of the Colorado State Implementation Plan for Class I Visibility Protection were submitted by the Governor in a letter dated November 18, 1992. The submittal completely replaces the previous version of the Long-Term Strategy and includes amendments to Air Quality Control Commission Regulation No. 3, "Air Contaminant Emissions Notices."

(i) Incorporation by reference.

(A) Revisions to the Visibility Chapter of Regulation No. 3 as follows: XV.F.1.c. as adopted on August 20, 1992, and effective on September 30, 1992.

(61) The Governor of Colorado submitted a portion of the requirements for the moderate nonattainment area PM_{10} State Implementation Plan (SIP) for Denver, Colorado with a letter dated June 7, 1993, and subsequent submittals dated September 3, 1993, and October 20, 1993, fulfilling most of the commitments made in the June 7, 1993, letter. The submittals were made to satisfy those moderate PM_{10} nonattainment area SIP requirements due for the Denver PM_{10} nonattainment area on November 15, 1991. EPA is approving, for the limited purpose of strengthening the SIP, the control measures contained in the SIP revisions identified above. (EPA is not approving, at this time, the control measures limiting the emissions from Purina Mills and Electron Corporation.)

(i) Incorporation by reference.

(A) Revisions to Regulation No. 4, "Regulation on the Sale of New Woodstoves and the Use of Certain Woodburning Appliances During High Pollution Days," as adopted by the Air Quality Control Commission on June 24, 1993, effective August 30, 1993, as follows: insert new Section VIII and recodification of References Section. This revision pertains to local jurisdiction implementation and enforcement of ordinances and resolutions restricting wood burning on high pollution days.

(B) Regulation No. 16, "Concerning Material Specifications for, Use of, and Clean-up of Street Sanding Material," as adopted by the Air Quality Control Commission on June 24, 1993, effective August 30, 1993, as follows: recodification of Regulation and addition of Sections II and III, which regulate emissions from street sanding and sweeping in the Denver PM_{10} nonattainment area.

(C) Revisions to Regulation No. 1, "Emission Control Regulations for Particulates, Smokes, Carbon Monoxide, and Sulfur Oxides for the State of Colorado," as adopted by the Air Quality Control Commission on August 19, 1993,

effective October 30, 1993, as follows: insert new Sections VII and VIII and recodification of the two following Sections, "Emission Regulations Concerning Areas Which are Nonattainment for Carbon Monoxide—Refinery Fluid Bed Catalytic Cracking Units", and "Statements of Basis and Purpose" Sections. The revisions pertain to restrictions on the use of oil as a back-up fuel for certain sources and set new emission limits at the following Public Service Company Power Plants: Cherokee, Arapahoe, and Valmont.

(D) Coors Glass Plant allowable emission limitations on three furnaces.

1. Permit 92JE129–1, effective date January 19, 1993, regulating emissions at the KTG glass melting furnace #1.

2. Permit 92JE129–2, effective date January 19, 1993, regulating emissions at the KTG glass melting furnace #2.

3. Permit 92JE129–3, effective date January 19, 1993, regulating emissions at the KTG glass melting furnace #3.

(E) Conoco Refinery allowable emission limitations from the refinery.

1. Permit 90AD524, effective date March 20, 1991, regulating a Tulsa natural gas fired 20MMbtu/hour heater equipped with low-Nox burners.

2. Permit 90AD053, effective date March 20, 1991, regulating process heaters H–10, H–11 and H–27 and process boilers B4, B6, and B8 all burning fuel gas only.

3. Permit 91AD180–3, effective December 28, 1992, regulating the three stage Claus sulfur recovery unit with tail gas recovery unit.

(ii) Additional material.

(A) Regional Air Quality Council, "Guidelines for Reducing Air Pollution from Street Sanding" sets voluntary guidelines for public works departments to follow to reduce the amount of street sand applied, and includes recommendations for increasing the effectiveness of street cleaning operations.

(B) Adolph Coors Company Brewery permit emission limitations on five boilers. Permits: C–12386–1&2, C–12386–3, C–10660, C–11199, and C–11305.

(62) On February 24, 1993, and December 9, 1993, the Governor of Colorado submitted revisions to the Colorado State implementation plan (SIP) to satisfy those moderate PM–10 nonattainment area SIP requirements for Pagosa Springs, Colorado due to be submitted by November 15, 1991. Included in the December 9, 1993 submittal were PM–10 contingency measures for Pagosa Springs to satisfy the requirements of section 172(c)(9) of the Act due to be submitted by November 15, 1993.

(i) Incorporation by reference.

(A) Colorado Air Quality Control Commission Nonattainment Areas regulation, section I. "Pagosa Springs Nonattainment Area," adopted on November 19, 1992, effective on December 30, 1992, with revisions adopted on November 12, 1993, effective on December 30, 1993.

(63) On November 18, 1992, the Governor of Colorado submitted a plan for the establishment and implementation of a Small Business Assistance Program to be incorporated into the Colorado State Implementation Plan as required by section 507 of the Clean Air Act.

(i) Incorporation by reference.

(A) Colorado Revised Statutes, Sections 25–7–109.2 and 25–7–114.7, to establish and fund a small business stationary source technical and environmental compliance assistance program, effective July 1, 1992.

(ii) Additional materials.

(A) November 18, 1992 letter from the Governor of Colorado submitting a Small Business Assistance Program plan to EPA.

(B) The State of Colorado plan for the establishment and implementation of a Small Business Assistance Program, adopted by the Colorado Air Quality Control Commission on October 15, 1992, effective October 15, 1992.

(64) On December 9, 1993, the Governor of Colorado submitted PM_{10} contingency measures for the moderate nonattainment PM_{10} areas of Canon City and Lamar, Colorado. The submittal was made to satisfy the moderate PM_{10} nonattainment area requirements for contingency measures due for Canon City and Lamar on November 15, 1993.

(i) Incorporation by reference.

(A) Colorado Air Quality Control Commission Nonattainment Area Regulation, Section IV. "Lamar Nonattainment Area," and Section V. "Canon City Nonattainment Area—PM–10,"

adopted on November 12, 1993, and effective December 30, 1993.

(65) On January 15, 1992, March 17, 1993, and December 9, 1993, the Governor of Colorado submitted revisions to the Colorado State implementation plan (SIP) to satisfy those moderate PM–10 nonattainment area SIP requirements for Aspen, Colorado due to be submitted by November 15, 1991. Included in the December 9, 1993 submittal were PM–10 contingency measures for Aspen to satisfy the requirements of section 172(c)(9) of the Act due to be submitted by November 15, 1993.

(i) Incorporation by reference.

(A) Colorado Air Quality Control Commission Nonattainment Areas regulation, all of Section III. "Aspen/Pitkin County PM–10 Nonattainment Area" except Section III.C.6., adopted on January 21, 1993 effective on March 2, 1993, with revisions adopted on November 12, 1993, effective on December 30, 1993.

(66) On January 14, 1993, the Governor of Colorado submitted revisions to the new source review and prevention of significant deterioration requirements in the Common Provisions Regulation and Regulation No. 3, as well as a revision to Regulation No. 7 pertaining to volatile organic compounds of negligible photochemical reactivity.

(i) Incorporation by reference.

(A) Air Quality Control Commission Common Provisions Regulation, Section I.C. and Section I.G., definitions of "adverse environmental effect," "air pollutant," "best available control technology," "federal act," "federally enforceable," "hazardous air pollutant," paragraph h. in "net emissions increase," "ozone depleting compound," and "significant;" revised 11/19/92, effective 12/30/92.

(B) Air Quality Control Commission Regulation No. 3 Air Contaminant Emission Notices, Sections I.B.1., I.B.2.c-e., I.B.3.e-f., IV.B.3–5, IV.D.2.a.(iii), IV.D.2.c., IV.D.3., IV.D.4., IV.E., IV.F., IV.H., V.E.9., VI.B.1., VI.B.4., VI.B.5., VI.C., VII.C., VIII.A., VIII.C.1., XI.A., and XIII.A. and B.; revised 11/19/92, effective 12/30/92.

(C) Air Quality Control Commission Regulation No. 7 Emissions of Volatile Organic Compounds, Section II.B.; revised 11/19/92, effective 12/30/92.

(67) On November 27, 1992, the Governor of Colorado, submitted a revision to the Colorado SIP. This revision replaces previous versions of Regulation No. 13 with the amended Regulation No. 13 (oxygenated gasoline program) adopted September 17, 1992. Regulation No. 13 requires the oxygenated gasoline programs to be implemented in the Fort Collins-Loveland, Colorado Springs, and Boulder-Denver Metropolitan Statistical Areas (MSA) as required by Section 211(m) of the Clean Air Act Amendments of 1990.

(i) Incorporation by reference.

(A) Revision to Regulation No. 13, "Oxygenated Gasoline Program," as adopted by the Colorado Air Quality Control Commission on September 17, 1992, effective October 10, 1992, as follows: entire Regulation revision. This regulation supersedes and replaces all previous revisions to Regulation No. 13, (40 CFR, 52.320(46)(2)).

(68) The Governor of Colorado submitted a portion of the requirements for the moderate nonattainment area PM_{10} State Implementation Plan (SIP) for Telluride, Colorado with a letter dated March 17, 1993. The submittal was made to satisfy those moderate PM_{10} nonattainment area SIP requirements due for Telluride on November 15, 1991; however, the submittal did not contain quantitative milestones to provide for maintenance of the PM_{10} National Ambient Air Quality Standards through December 1997. The Governor of Colorado submitted moderate PM_{10} nonattainment area contingency measures for Telluride with a letter dated December 9, 1993. This submittal was intended to satisfy the requirements of section 172(c)(9) of the Clean Air Act due on November 15, 1993.

(i) Incorporation by reference.

(A) Colorado Air Quality Control Commission Nonattainment Areas regulation, Section II., Telluride Nonattainment Area, adopted January 21, 1993 and effective on March 2, 1993, with revisions adopted November 12, 1993 and effective December 30, 1993.

(ii) Additional material.

(A) The commitment and schedule for the adoption and implementation of PM_{10} control measures that are necessary to demonstrate maintenance of the 24-hour PM_{10} standard in Telluride,

which were submitted in an April 21, 1994 letter from Thomas Getz, Air Pollution Control Division, to Douglas M. Skie, EPA.

(69) On January 14, 1994 and on June 24, 1994, Roy Romer, the Governor of Colorado, submitted SIP revisions to the Implementation Plan for the Control of Air Pollution. This revision establishes and requires the implementation of an enhanced motor vehicle inspection and maintenance program in the Denver and Boulder urbanized areas as required by section 187(a)(6) of the Clean Air Act Amendments of 1990. This material is being incorporated by reference for the enforcement of Colorado's enhanced I/M program only.

(i) Incorporation by reference.

(A) Colo. Rev. Stat. Sections 42–4–306.5—42–4–316 adopted June 8, 1993 as House Bill 93–1340, effective July 1, 1993.

(B) Regulation No. 11 (Inspection/Maintenance Program) as adopted by the Colorado Air Quality Control Commission (AQCC) on March 17, 1994.

(ii) Additional materials.

(A) SIP narrative and technical appendices 1–20 as corrected and approved by the AQCC on June 21, 1994. The narrative is entitled "State of Colorado Motor Vehicle Inspection and Maintenance State Implementation Plan", dated December 16, 1993 with technical corrections.

(70) Revisions to the Colorado State Implementation Plan were submitted by the Governor on September 27, 1989, and August 30, 1990. The revisions consist of amendments to the Ozone provisions in Regulation No. 7, "Regulation To Control Emissions of Volatile Organic Compounds."

(i) Incorporation by reference.

(A) Revisions to Regulation No. 7, Sections 7.I (Applicability), 7.II (General Provisions), 7.III (General Requirements for Storage and Transfer of Volatile Organic Compounds), 7.IV (Storage of Highly Volatile Organic Compounds), 7.V (Disposal of Volatile Organic Compounds), 7.VI (Storage and Transfer of Petroleum Liquid), 7.VIII (Petroleum Processing and Refining), 7.IX (Surface Coating Operations), 7.X (Use of Solvents for Degreasing and Cleaning), 7.XI (Use of Cutback Asphalt), 7.XII (Control of VOC Emissions from Dry Cleaning Facilities Using Perchloroethylene as a Solvent), 7.XIII (Graphic Arts), 7.XIV (Pharmaceutical Synthesis), 7.XV (Control of Volatile Organic Compound Leaks from Vapor Collection Systems Located at Gasoline Terminals, Bulk Plants, and Gasoline Dispensing Facilities), and Appendices A (Criteria for Control of Vapors from Gasoline Transfer to Storage Tanks), B (Criteria for Control of Vapors from Gasoline Transfer at Bulk Plants-Vapor Balance System), and D (Test Procedures for Annual Pressure/Vacuum Testing of Gasoline Transport Trucks). The following new emission sources and appendices were added to Regulation No. 7: 7.IX.A.7 (Fugitive Emission Control), 7.IX.M (Flat Wood Paneling Coating), 7.IX.N. (Manufacture of Pneumatic Rubber Tires), and Appendix E (Emission Limit Conversion Procedure). These revisions became effective on October 30, 1989, and August 30, 1990.

(ii) Additional material.

(A) February 5, 1992, letter from John Leary, Acting Director, Colorado Air Pollution Control Division, to Douglas Skie, EPA. This letter contained the State's commitment to conduct capture efficiency testing using the most recent EPA capture efficiency protocols, and the commitment to adopt federal capture efficiency test methods after they are officially promulgated by EPA.

(71) The Governor of Colorado submitted carbon monoxide contingency measures for Colorado Springs and Fort Collins with a letter dated February 18, 1994. This submittal was intended to satisfy the requirements of section 172(c)(9) of the Clean Air Act for contingency measures which were due on November 15, 1993.

(i) Incorporation by reference.

(A) Colorado Air Quality Control Commission Nonattainment Areas regulation, 5 CCR 1001–20, Section VI, City of Fort Collins Nonattainment Area, and Section VII, Colorado Springs Nonattainment Area, adopted on November 12, 1993, effective on December 30, 1993.

(72) On November 12, 1993, August 25, 1994, September 29, 1994, November 17, 1994, and January 29, 1996, the Governor of Colorado submitted revisions to the

State's construction permitting requirements in Regulation No. 3 and the Common Provisions Regulation. These revisions included nonattainment new source review permitting requirements for new and modified major sources of PM–10 precursors locating in the Denver moderate PM–10 nonattainment area, changing from the dual source definition to the plantwide definition of source in nonattainment new source review permitting, other changes to Regulation No. 3 to make the construction permitting program more compatible with the State's title V operating permit program, and correction of deficiencies. In addition, the Governor submitted revisions to the Common Provisions Regulation on April 9, 1992 and January 14, 1993.

(i) Incorporation by reference.

(A) Common Provisions Regulation, 5 CCR 1001–2, Section I.G., definitions of "baseline area" and "reconstruction;" adopted 10/17/91, effective 11/30/91.

(B) Common Provisions Regulation, 5 CCR 1001–2, Section I.G., definitions of "net emissions increase" and "stationary source;" adopted 8/20/92, effective 9/30/92.

(C) Common Provisions Regulation, 5 CCR 1001–2, Section I.A. and Section I.G., definitions of "emission control regulation" and "volatile organic compound;" adopted 11/19/92, effective 12/30/92.

(D) Regulation No. 3, Air Contaminant Emissions Notices, 5 CCR 1001–5, revisions adopted 8/18/94, effective 9/30/94, as follows: Part A (with the exception of the last sentence in the definition of "Federally enforceable" in Section I.B.22 and with the exception of Section IV.C.) and Part B (with the exception of Sections V.B. and VII.A.5.). This version of Regulation No. 3, as incorporated by reference here, supersedes and replaces all versions of Regulation No. 3 approved by EPA in previous actions.

(E) Regulation No. 3, Air Contaminant Emissions Notices, 5 CCR 1001–5, revisions adopted on 3/16/95, effective 5/30/95, as follows: Part A: Sections I.B.12., I.B.31., I.B.32., I.B.35.B., I.B.36., I.B.37., I.B.41., I.B.50., I.B.57., I.B.66., II.D.5.c., II.D.5.d., V.B., V.C.6., V.C.10., V.E.1.c., V.E.1.d., V.H.4. through V.H.8., V.I.1., VI.C.1.f., and VII.A.; Part B: Sections III.D.2., III.D.3., IV.B.4., IV.C.1., IV.D.1.a., IV.D.2.c.(i)(E), IV.D.4.a., and IV.J.

(ii) Additional material.

(A) July 3, 1995 letter from Martha E. Rudolph, First Assistant Attorney General, Colorado Office of the Attorney General, to Jonah Staller, EPA.

(73) On January 14, 1994 and on June 24, 1994, Roy Romer, the Governor of Colorado, submitted SIP revisions to the State Implementation Plan for the Control of Air Pollution. This revisions requires the implementation of a basic motor vehicle inspection and maintenance program in the urbanized areas of El Paso (Colorado Springs), Larimer (Fort Collins), and Weld (Greeley) Counties meeting the requirements of the Clean Air Act Amendments of 1990. This material is being incorporated by reference for the enforcement of Colorado's basic I/M program only.

(i) Incorporation by reference.

(A) Colo. Rev. Stat. §§ 42–4–306.5—42–4–316 adopted June 8, 1993 as House Bill 93–1340, effective July 1, 1993.

(B) Regulation No. 11 (Inspection/Maintenance Program) as adopted by the Colorado Air Quality Control Commission (AQCC) on March 17, 1994, effective April 30, 1994.

(74) The Governor of Colorado submitted PM_{10} contingency measures for Denver, Colorado in a letter dated November 17, 1995.

(i) Incorporation by reference.

(A) Section IV. of Regulation No. 16, Street Sanding Emissions, adopted March 16, 1995, effective May 30, 1995.

(75) The Governor of Colorado submitted revisions to the PM_{10} moderate nonattainment area State Implementation Plan (SIP) for Telluride, Colorado with a letter dated April 22, 1996. The submittal was made to satisfy the State's commitment to adopt additional control measures necessary to demonstrate continued maintenance of the PM_{10} National Ambient Air Quality Standards through 1997. Due to the satisfaction of this commitment, the SIP now adequately meets the quantitative milestone requirement.

(i) Incorporation by reference.

(A) Colorado Air Quality Control Commission State Implementation

Plan-Specific Regulation for Nonattainment Areas, 5 CCR 1001–20, Section II.C., Telluride Nonattainment Area Street Sanding Requirements, adopted August 17, 1995 and effective October 30, 1995.

(76) The Governor of Colorado submitted the moderate nonattainment area PM_{10} State Implementation Plan (SIP) for Steamboat Springs, Colorado with a letter dated September 16, 1997. The submittal was made to satisfy those moderate PM_{10} nonattainment area SIP requirements due for Steamboat Springs on July 20, 1995, including among other things, control measures, technical analyses, quantitative milestones, and contingency measures. The September 16, 1997 submittal also included the Steamboat Springs emergency episode plan.

(i) Incorporation by reference.

(A) Colorado Air Quality Control Commission Nonattainment Areas, 5 CCR 1001–20, Section VIII., Steamboat Springs PM_{10} Nonattainment Area, adopted October 17, 1996 and effective on December 30, 1996.

(ii) Additional material.

(A) An October 29, 1997 letter from Margie M. Perkins, APCD, to Richard R. Long, EPA, clarifying that the regulation entitled "Ambient Air Quality Standards for the State of Colorado" was included in the September 16, 1997 Steamboat Springs SIP submittal for informational purposes only.

(77) On September 29, 1995, Roy Romer, the Governor of Colorado, submitted a SIP revision to the State Implementation Plan for the Control of Air Pollution. This revision provides a replacement Regulation No. 11, Inspection/Maintenance Program which limits dealer self-testing. This material is being incorporated by reference for the enforcement of Colorado's I/M program.

(i) Incorporation by reference.

(A) Department of Health, Air Quality Control Commission, Regulation No. 11 (Motor Vehicle Emissions Inspection Program) as adopted by the Colorado Air Quality Control Commission (AQCC) on September 22, 1994, effective November 30, 1994.

(78) Revisions to the Colorado State Implementation Plan were submitted by the Governor of the State of Colorado on August 25, 1995, and October 16, 1995. The revisions consist or amendments to Regulation No. 3, ''Air Contaminant Emissions Notices'' and to Regulation No. 7, ''Regulation To Control Emissions of Volatile Organic Compounds.'' These revisions involve source-specific State Implementation Plan requirements for emission trading for Pioneer Metal Finishing Inc. and crossline averaging for Lexmark International Inc.

(i) Incorporation by reference.

(A) Revisions to Regulation No. 3, 5 CCR 1001–5, sections V.A. (Purpose), V.C.1 , V.C.3, V.C.5 (Definitions), V.D.6, V.D.7, V.D.9 (Procedure for Certification of Emissions Reductions and Approval of Transactions), V.E. (Criteria for Certification of Emissions Reductions), V.F., V.F.5, V.F.7, V.F.8.l, V.F.14, and V.F.15 (Criteria for Approval of all Transactions) and Revisions to Regulation No. 7, 5 CCR 1001–9, section II.D.1.a (Alternative Control Plans and Test Methods) became effective on December 30, 1994. The new section IX.L.2.c through IX.L.2.c.xv (Manufactured Metal Parts and Metal Products) to Regulation No. 7, 5 CCR 1001–9, applicable to Pioneer Metal Finishing Inc., became effective on April 30, 1995. The new section IX.A.12 through IX.A.12.a.(xi) (General Provisions) to Regulation No. 7, 5 CCR 1001–9, applicable to Lexmark International Inc., became effective July 30, 1995.

(79) On August 23, 1996, the Governor of Colorado submitted a revision to the long-term strategy portion of Colorado's State Implementation Plan (SIP) for Class I Visibility Protection. The revision was made to incorporate into the SIP, among other things, emissions reduction requirements for the Hayden Station (a coal-fired steam generating plant located near the town of Hayden, Colorado) that are based on a consent decree addressing numerous air pollution violations at the plant. This SIP revision replaces the previous existing impairment portion of the long-term strategy as it relates to the Mt. Zirkel Wilderness Area.

(i) Incorporation by reference.

(A) Long-Term Strategy Review and Revision of Colorado's State Implementation Plan for Class I Visibility

Protection Part I: Hayden Station Requirements, as follows: Section VI., effective on August 15, 1996.

(80) On July 11, 1994, July 13, 1994, September 29, 1995, and December 22, 1995, the Governor of Colorado submitted revisions to the Colorado State Implementation Plan (SIP) to satisfy those CO nonattainment area SIP requirements for Denver and Longmont, Colorado due to be submitted by November 15, 1992, and further revisions to the SIP to shorten the effective period of the oxygenated fuels program. EPA is not taking action on the SIP provision submitted on July 11, 1994 that calls for a prohibition of the reregistration of abandoned and impounded vehicles.

(i) Incorporation by reference.

(A) Regulation No. 11, Motor Vehicle Emissions Inspection Program, 5 CCR 1001–13, as adopted on September 22, 1994, effective November 30, 1994. Regulation No. 13, Oxygenated Fuels Program, 5 CCR 1001–16, as adopted on October 19, 1995, effective December 20, 1995.

(81) On August 1, 1996, the Governor of Colorado submitted revisions to the prevention of significant deterioration regulations in Regulation No. 3 to incorporate changes in the Federal PSD permitting regulations for PM–10 increments and to make other minor administrative revisions.

(i) Incorporation by reference.

(A) Regulation No. 3, Air Contaminant Emissions Notices, 5 CCR 1001–5, revisions adopted 8/17/95, effective 10/30/95, as follows: Part A, Section I.B., as follows: the definition of "baseline area" in subsection 10, the definition of "minor source baseline date" in subsection 35, and the definition of "net emissions increase" in subsection 37; Part A: Sections IV.B., V.C.1., and V.D.11.c.; Part B: Sections IV.D.3.b.(v), VII.A.1., and X.D.

(82) The Governor of Colorado submitted the Denver moderate nonattainment area PM_{10} State Implementation Plan (SIP) with a letter dated March 30, 1995. The Governor submitted revisions to Regulation No. 13, one of the control measures relied on in the PM_{10} SIP, on December 22, 1995. These submittals as well as support documentation submittals made on June 8, 1993, June 10, 1993, June 25, 1993, July 19, 1993, August 5, 1993, September 3, 1993, September 21, 1993, October 20, 1993, December 12, 1993, January 19, 1994, December 23, 1994, March 3, 1995, and November 8, 1995 satisfy those moderate PM_{10} nonattainment area SIP requirements due for the Denver PM_{10} nonattainment area on November 15, 1991. EPA is approving the SIP. This approval replaces the previous limited approval at 40 CFR 52.320(c)(61).

(i) Incorporation by reference.

(A) Regulation No. 4, "Regulation on the Sale of New Woodstoves and the Use of Certain Woodburning Appliances During High Pollution Days," 5 CCR 1001–6, as adopted by the Air Quality Control Commission on June 24, 1993, effective August 30, 1993.

(B) Local woodburning ordinances and resolutions.

(*1*) Arvada, Colorado. Ordinance number 2451, effective November 2, 1987, regarding woodburning restrictions.

(*2*) Aurora, Colorado. Ordinance numbers 87–118 and 92–14, effective May 22, 1987 and May 22, 1992, respectively, regarding woodburning restrictions.

(*3*) Boulder, Colorado. Ordinance numbers 5007 and 5445, adopted November 25, 1986 and April 21, 1992, respectively, regarding woodburning restrictions.

(*4*) Broomfield, Colorado. Ordinance number 794, effective November 24, 1988, regarding woodburning restrictions.

(*5*) Denver, Colorado. Ordinance numbers 293 and 1018, approved May 30, 1990 and December 16, 1993, respectively, regarding woodburning restrictions.

(*6*) Douglas County, Colorado. Resolution number 991–128, adopted November 14, 1991, regarding woodburning restrictions.

(*7*) Englewood, Colorado. Ordinance numbers 31 and 39, passed on July 20, 1992, regarding woodburning restrictions.

(*8*) Federal Heights, Colorado. Ordinance number 565, adopted January 5, 1988, regarding woodburning restrictions.

(*9*) Glendale, Colorado. Ordinance numbers 2 and 14, adopted January 5, 1988 and effective on October 20, 1992, respectively, regarding woodburning restrictions.

(*10*) Greenwood Village, Colorado. Ordinance numbers 17 and 9, effective July 9, 1988 and March 25, 1992, respectively, regarding woodburning restrictions.

(*11*) Jefferson County, Colorado. Resolution numbers CC89–873 and CC90–617, dated December 29, 1989 and August 7, 1990, respectively, regarding woodburning restrictions.

(*12*) Lafayette, Colorado. Ordinance number 24; series 1988, effective November 15, 1988, regarding woodburning prohibitions.

(*13*) Lakewood, Colorado. Ordinance numbers 0–86–113 and 0–92–61, effective December 1, 1986 and November 28, 1992, respectively, regarding woodburning restrictions.

(*14*) Littleton, Colorado. Ordinance numbers 51 and 26, passed on December 6, 1988 and August 18, 1992, respectively, regarding woodburning restrictions.

(*15*) Longmont, Colorado. Ordinance number 0–89–1, adopted December 27, 1988, regarding woodburning restrictions.

(*16*) Mountain View, Colorado. Ordinance number 90–5, approved on January 7, 1991, regarding woodburning restrictions.

(*17*) Sheridan, Colorado. Ordinance numbers 22 and 1, approved October 25, 1988 and February 9, 1993, respectively, regarding woodburning restrictions.

(*18*) Thornton, Colorado. Ordinance numbers 2120 and 2194, adopted October 28, 1991 and September 28, 1992, respectively, regarding woodburning restrictions.

(*19*) Westminster, Colorado. Ordinance numbers 1742 and 2092, enacted on November 9, 1987 and December 28, 1992, respectively, regarding woodburning restrictions.

(C) Regulation No. 16, "Concerning Material Specifications for, Use of, and Clean-up of Street Sanding Material," 5 CCR 1001–18, as adopted by the Air Quality Control Commission on September 22, 1994, effective November 30, 1994.

(D) Regulation No. 1, "Emission Control Regulations for Particulates, Smokes, Carbon Monoxide, and Sulfur Oxides for the State of Colorado," 5 CCR 1001–3, Sections I–IV and VI–IX, and Appendices A and B, as adopted by the Air Quality Control Commission on August 19, 1993, effective October 20, 1993; with revisions to Sections VII and VIII, adopted by the Air Quality Control Commission on September 22, 1994, effective November 30, 1994.

(E) Public Service Company Cherokee facility SO_2 emission limitations for the power facility.

(*1*) Permit 86AD352(1), effective date November 13, 1986, regulates SO_2 emissions at Unit #1.

(*2*) Permit 86AD352–2, effective date April 30, 1992, regulates SO_2 emissions at Unit #4.

(F) Purina Mills Inc. total PM_{10} emissions limitations at the animal feed manufacturing facility.

(*1*) Permit 93AD1008–1, effective date October 19, 1993, regulating emissions at the finished product loadout facility.

(*2*) Permit 93AD1008–2, effective date October 19, 1993, regulating emissions at the grain receiving facility.

(G) Electron Corporation total PM_{10} emission limitations at the gray iron foundry.

(*1*) Permit 93AR1363–1, effective date January 12, 1994, regulating emissions at the Table shot blaster and associated baghouse.

(*2*) Permit 93AR1363–2, effective date January 12, 1994, regulating emissions at the five grinding booths-stand and associated baghouse.

(*3*) Permit 93AR1363–3, effective date January 12, 1994, regulating emissions at the five grinding booths-hand and associated baghouse.

(*4*) Permit 93AR1363–4, effective date January 12, 1994, regulating emissions at the Muller-25 sand system and associated baghouse.

(*5*) Permit 93AR1363–5, effective date January 12, 1994, regulating emissions at the Coleman core oven-sand.

(*6*) Permit 93AR1363–6, effective date January 12, 1994, regulating emissions at the Spinner wheelabrator and associated baghouse.

(*7*) Permit 93AR1363–7, effective date January 12, 1994, regulating emissions at the Sand sile-core room and associated baghouse.

(*8*) Permit 93AR1363–8, effective date January 12, 1994, regulating emissions from pouring of molten iron (casting) and castings cooling.

(*9*) Permit 93AR1363–9 effective date January 12, 1994, regulating emissions at three tumble blast machines and associated baghouse.

(*10*) Permit 93AR1363–10, effective date January 12, 1994, regulating emissions at two mullers-80A and associated baghouse.

(*11*) Permit 93AR1363–11, effective date January 12, 1994, regulating emissions at the Casting shakeout hood and associated baghouse.

(*12*) Permit 93AR1363–12, effective date January 12, 1994, regulating emissions at the Casting-disamatic mold and associated baghouse.

(*13*) Permit 93AR1363–13, effective date January 12, 1994, regulating emissions at the Sand silo-disamatic and associated baghouse.

(*14*) Permit 93AR1363–14, effective date January 12, 1994, regulating emissions at the Sand silo-air set room and associated baghouse.

(*15*) Permit 93AR1363–15, effective date January 12, 1994, regulating emissions at two electric induction furnaces and associated baghouse.

(*16*) Permit 93AR1363–16, effective date January 12, 1994, regulating emissions at two Inducto-Therm electric induction furnaces model #2000/4, serial nos. 40102 and 40103, and associated baghouse.

(*17*) Permit 93AR1363–17, effective date January 12, 1994, regulating emissions from chemicals used in core making process.

(*18*) Permit 93AR1363–18, effective date January 12, 1994, regulating emissions at the Loop shakeout and associated baghouse.

(*19*) Permit 93AR1363–19, effective date January 12, 1994, regulating emissions at the Floor shakeout and associated baghouse.

(*20*) Permit 93AR1363–20, effective date January 12, 1994, regulating emissions at the Reclaim sand and associated baghouse.

(*21*) Permit 93AR1363–21 effective date January 12, 1994, regulating emissions at the Sand heater/cooler and associated baghouse.

(*22*) Permit 93AR1363–22, effective date January 12, 1994, regulating emissions at the Paint spray booth.

(H) TRIGEN-Colorado Energy Corporation permit emissions limitations at two boilers.

(*1*) Permit 10JE660, effective date February 25, 1997, regulating emissions at the #4 boiler: tangential fired cogeneration steam boiler.

(*2*) Permit 11JE305–1, effective date February 19, 1997, regulating emissions at the #5 boiler: tangential fired cogeneration steam boiler.

(I) Rocky Mountain Bottle Company emission limitations on three furnaces.

(*1*) Permit 92JE129–1, effective date June 29, 1995, regulating emissions at the KTG glass melting furnaces #1, #2 and #3.

(J) Conoco Refinery allowable emission limitations from the refinery.

(*1*) Permit 90AD524, effective date March 20, 1991, regulating a Tulsa natural gas fired 20MMbtu/hour heater equipped with low-NO_X burners.

(*2*) Permit 90AD053, effective date March 20, 1991, regulating process heaters H–10, H–11 and H–27 and process boilers B4, B6, and B8 all burning fuel gas only.

(*3*) Permit 91AD180–3, effective December 28, 1992, regulating the three stage Claus sulfur recovery unit with tail gas recovery unit.

(ii) Additional material.

(A) Regional Air Quality Council, "Guidelines for Reducing Air Pollution from Street Sanding" sets voluntary guidelines for public works departments to follow to reduce the amount of street sand applied, and includes recommendations for increasing the effectiveness of street cleaning operations.

(83) A revision to the Colorado State Implementation Plan was submitted by the Governor of the State of Colorado on April 22, 1996. The revision consists of an amendment to Colorado Air Quality Control Commission Regulation No. 7, "Regulation To Control Emissions of Volatile Organic Compounds," to provide an exemption for beer production and associated beer container storage and transfer operations involving volatile organic compounds under 1.5 psia from certain bottom or submerged filling requirements that Regulation No. 7 otherwise imposes. The revision consists of the addition of paragraph C to section III, "General Requirements for

Storage and Transfer of Volatile Organic Compounds," of Regulation No. 7.

(i) Incorporation by reference.

(A) Colorado Air Quality Control Commission Regulation No. 7, 5 CCR 1001–9, section III, paragraph C, adopted by the Colorado Air Quality Control Commission on March 16, 1995, State effective May 30, 1995.

(84) The Governor of Colorado submitted the Denver PM10 mobile source emissions budget State Implementation Plan (SIP) with a letter dated July 18, 1995. The Governor submitted the Denver NO_X mobile source emissions budget State Implementation Plan (SIP) with a letter dated April 22, 1996. The PM10 and NO_X mobile source emissions budgets and other provisions in these SIP submittals are used to assess conformity of transportation plans, transportation improvement programs, and transportation projects.

(i) Incorporation by reference.

(A) Colorado Air Quality Control Commission, "Ambient Air Quality Standards" regulation 5CCR 1001–14, Section A.1. Budgets for the Denver Nonattainment Area (Modeling Domain) PM10, Sections A.2. and A.3., and Sections B and C, adopted on February 16, 1995, effective April 30, 1995, as amended by the Colorado General Assembly through enactment of Colorado Senate Bill 95–110, which Bill was enacted on May 5, 1995 and signed by the Governor of Colorado on May 31, 1995. (See paragraph (c)(84)(i)(B) of this section).

(B) Colo. Rev. Stat. section 25–7–105(1)(a)(III), enacted by the Colorado General Assembly on May 5, 1995 as part of Colorado Senate Bill 95–110 and signed by the Governor of Colorado on May 31, 1995.

(C) Colorado Air Quality Control Commission "Ambient Air Quality Standards" regulation 5CCR 1001–14, Section A.1. Budgets for the Denver Nonattainment Area (Modeling Domain) Nitrogen Oxides, as adopted June 15, 1995, effective August 30, 1995.

(85) On September 16, 1997, the Governor of Colorado submitted revisions to Regulation No. 10 "Criteria for Analysis of Conformity" that incorporate the General Conformity requirements of 40 CFR part 51, Subpart W into State regulation.

(i) Incorporation by reference.

(A) Regulation No. 10 "Criteria for Analysis of Conformity", 5 CCR 1001–12, as adopted on October 17, 1996, effective December 30, 1996.

(86) On October 1, 1998, the Governor of Colorado submitted revisions to Regulation No. 13 "Oxygenated Fuels Program" that shortened the effective time period of the oxygenated fuels program for Denver/Boulder, Colorado Springs, Fort Collins, and Longmont carbon monoxide nonattainment areas and also reduced the required oxygen content during certain periods.

(i) Incorporation by reference.

(A) Regulation No. 13 "Oxygenated Fuels Program", 5 CCR 1001–16, as adopted on January 16, 1998, effective March 30, 1998.

(87) On September 16, 1997, the Governor of Colorado submitted revisions to Regulations No. 3 and 7 and the Common Provisions Regulation to update the State's list of negligibly reactive volatile organic compounds (VOCs) and to consolidate the list of negligibly reactive VOCs from Regulations No. 3 and 7 into the Common Provisions Regulation. The Governor also submitted revisions to Parts A and B of Regulation No. 3 on September 16, 1997 to amend the definition of "applicable requirement" and to correct typographical errors. On August 19, 1998, the Governor submitted revisions to the Common Provisions Regulation to update its list of negligibly reactive VOCs. The Governor also submitted revisions to Regulation No. 7 to repeal the requirements for control of VOC emissions from dry cleaning facilities using perchloroethylene as a solvent.

(i) Incorporation by reference.

(A) Common Provisions Regulation, 5 CCR 1001–2, Section I.G., definition of "negligibly reactive VOCs (NRVOCs)" and subsection h. of the definition of "net emissions increase," adopted 12/21/95, effective 3/1/96.

(B) Regulation No. 3, "Air Contaminant Emission Notices," 5 CCR 1001–5, adopted 12/21/95, effective 3/1/96, as follows: Part A, subsection h. of the definition of "net emissions increase" in Section I.B.37.; and Part B, Section IV.D.4.

(C) Regulation No. 7, "Emissions of Volatile Organic Compounds," 5 CCR

1001–9, Section II.B., adopted 12/21/95, effective 3/1/96.

(D) Regulation No. 3, "Air Contaminant Emission Notices," 5 CCR 1001–5, adopted 6/20/96, effective 8/30/96, as follows: Part A, definition of "applicable requirement" in Section I.B.9., definition of "major source (for the purposes of Part C—operating permits)" in Section I.B.59., and Section V.C.12; and Part B, Section III.D.2.

(E) Common Provisions Regulation, 5 CCR 1001–2, Section I.G., definition of "negligibly reactive VOCs (NRVOCs)" adopted 11/21/96, effective 1/30/97.

(F) Regulation No. 7, "Emissions of Volatile Organic Compounds," 5 CCR 1001–9, Section XII., adopted 11/21/96, effective 1/30/97.

(88) On April 26, 1996, the Governor of Colorado submitted revisions to Regulation No. 3 to allow a source to voluntarily request a permit to limit potential to emit and to require that such permits be subject to public participation.

(i) Incorporation by reference.

(A) Regulation No. 3, "Air Contaminant Emissions Notices," 5 CCR 1001–5, revisions adopted 5/18/95, effective 7/30/95, as follows: part B, sections III.A.4, III.A.7, and IV.C.4.

(89) On May 10, 2000, the Governor of Colorado submitted revisions to Regulation No. 13 "Oxygenated Fuels Program" that eliminated the Oxygenated Fuels Program for El Paso County and the Colorado Springs CO attainment/maintenance area.

(i) Incorporation by reference.

(A) Regulation No. 13 "Oxygenated Fuels Program", 5 CCR 1001–16, as adopted on February 17, 2000, effective April 30, 2000, as follows: Sections I.D.19, II.A, II.A.1, II.A.2, II.C.1.a, II.C.1.b., and II.C.1.c.

(90) On May 10, 2000, the State of Colorado submitted maintenance plans for the Telluride and Pagosa Springs PM_{10} nonattainment areas and requested that these areas be redesignated to attainment for the PM_{10} National Ambient Air Quality Standards. The redesignation requests and maintenance plans satisfy all applicable requirements of the Clean Air Act.

(i) Incorporation by reference.

(A) Colorado Air Quality Control Commission, "State Implementation Plan Specific Regulations for Non-attainment—Attainment/Maintenance Areas (Local Elements)," 5 CCR 1001–20, revisions adopted 3/16/00, effective 5/30/00, as follows: Section I., Pagosa Springs Attainment/Maintenance Area and Section II., Telluride Attainment/Maintenance Area.

(ii) Additional Material.

(A) January 24, 2001 letter from Margie Perkins, Director, Colorado Air Pollution Control Division, to Richard Long, Director, EPA Region VIII Air and Radiation Program, clarifying the commitments of the Verification of Continued Attainment section of the Telluride and Pagosa Springs maintenance plans.

(91) On May 10, 2000, the Governor of Colorado submitted revisions to the Colorado State Implementation Plan consisting of: Revisions to Regulation 12 to remove the "Reduction of Diesel Vehicle Emissions" program from areas outside the Denver PM_{10} non-attainment area, and Regulation 9 "Trip Reduction," effective on January 30, 1979, is rescinded.

(i) Incorporation by reference.

(A) Revisions to Colorado Air Quality Control Commission Regulation No. 12, 5 CCR 1001–15, adopted by the Colorado Air Quality Control Commission on March 16, 2000, State effective May 30, 2000.

(92) On November 5, 1999, the Governor of Colorado submitted Regulation No. 10, Criteria for Analysis of Conformity, Part B—Conformity to State Implementation Plans of Transportation Plans, Programs and Projects Developed, Funded or Approved Under Title 23 U.S.C. or the Federal Transit Act, that incorporates conformity consultation requirements implementing 40 CFR Part 93, Subpart A into State regulation.

(i) Incorporation by reference.

(A) Regulation No. 10, Criteria for Analysis of Conformity, Part B—Conformity to State Implementation Plans of Transportation Plans, Programs and Projects Developed, Funded or Approved Under Title 23 U.S.C. or the Federal Transit Act, 5 CCR 1001–12, as adopted October 15, 1998, effective November 30, 1998.

(93) On June 7, 2001, the Governor of Colorado submitted a revision to the

long-term strategy portion of Colorado's State Implementation Plan (SIP) for Class I Visibility Protection. The revision was made to incorporate into the SIP emissions reduction requirements for the Craig Station (a coal-fired steam generating plant located near the town of Craig, Colorado). This SIP revision is expected to remedy Craig Station's contribution to visibility impairment in the Mt. Zirkel Wilderness Area.

(i) Incorporation by reference.

(A) Revision of Colorado's State Implementation Plan for Class I Visibility Protection: Craig Station Units 1 and 2 Requirements, Section III, effective on April 19, 2001.

(94) On August 8, 1996, the Governor of Colorado submitted revisions to Regulation No. 3, "Air Contaminant Emissions Notices," that exempt gasoline stations located in ozone attainment areas from construction permit requirements, with the exception of those gasoline stations located in the Denver Metro ozone attainment maintenance area. The Governor also submitted revisions to Regulation No. 7, "Emissions of Volatile Organic Compounds," that state the provisions of Regulation No. 7 shall apply only to ozone nonattainment areas and the Denver Metro Attainment Maintenance Area with the exception of Section V, Paragraphs VI.B.1 and 2., and Subsection VII.C., which shall apply statewide.

(i) Incorporation by reference.

(A) Part B, section III. D.1.f of Regulation No. 3 "Air Contaminant Emissions Notices", 5 CCR 1001–5, as adopted on March 21, 1996, effective May 30, 1996.

(B) Section I.A.1 of Regulation No. 7 "Emissions of Volatile Organic Compounds", 5 CCR 1001–9, as adopted on March 21, 1996, effective May 30, 1996.

(95) On July 30, 2001, the State of Colorado submitted a maintenance plan for the Denver PM_{10} nonattainment area and requested that the area be redesignated to attainment for the PM_{10} National Ambient Air Quality Standards. The maintenance plan deletes from the SIP Regulation No. 12, "Diesel Inspection/Maintenance Program" and permits for six stationary sources incorporated by reference in paragraphs (c)(91)(i)(A) and (c)(82)(i)(E) through (J), of this section respectively. In conjunction with the maintenance plan, Colorado revised previously approved regulations and requirements to control particulate matter (Regulation No. 1 and Regulation No. 16.) Among other changes, the revision to Regulation No. 1 includes the deletion of section VII.B of Regulation No. 1 from the SIP. Among other changes, the revision to Regulation No. 16 includes the deletion of sections III and IV of Regulation No. 16 from the SIP. The redesignation request, maintenance plan, and revisions to Regulations Nos. 1 and 16 satisfy all applicable requirements of the Clean Air Act.

(i) Incorporation by reference.

(A) Section VII and VIII.A of Regulation No. 1, "Emission Control for Particulates, Smokes, Carbon Monoxide, & Sulfur Oxides," 5 CCR 1001–3, as adopted August 16, 2001 and effective September 30, 2001. (See paragraph (c)(95)(ii)(I) of this section regarding clerical error in section VIII.A of Regulation No. 1.)

(B) Sections I and II, Regulation No. 16, "Street Sanding Emissions," 5 CCR 1001–18, as adopted April 19, 2001, effective June 30, 2001.

(ii) Additional material.

(A) Letter dated September 5, 2001 from Casey Shpall, Colorado Office of the Attorney General to Cindy Rosenberg, EPA Region 8, clarifying that public notice was given of the proposed changes and transmitting the appropriate documentation.

(B) Fax dated September 6, 2001 from Doug Lempke, Colorado Department of Public Health and Environment, to Cindy Rosenberg, EPA Region 8, submitting Colorado Attorney General's opinion concerning revisions to Regulation No. 16.

(C) Letter dated September 10, 2001 from Kevin Briggs, Colorado Department of Public Health and Environment, to Kevin Golden, EPA Region 8, transmitting model input files for maintenance demonstration.

(D) Letter dated September 13, 2001 from Casey Shpall, Colorado Office of the Attorney General to Cindy Rosenberg, EPA Region 8, explaining that an error occurred in the publication of Colorado Regulation No. 1.

(E) Letter dated November 27, 2001 from Margie Perkins, Colorado Department of Public Health and Environment, to Richard Long, EPA Region 8, transmitting the justification for the revised street sweeping credits used in the PM_{10} maintenance plan.

(F) Letter dated April 5, 2002 from Margie Perkins, Colorado Department of Public Health and Environment, to Richard Long, EPA Region 8, transmitting a supplement to the Technical Support Documentation correcting the emission rates used in the PM_{10} maintenance plan for Conoco and Ultramar Diamond Shamrock.

(G) Complaint and Consent Decree in *United States* v. *Conoco Inc.,* entered by the United States District Court for the Southern District of Texas on April 29, 2002.

(H) July 31, 2002 memorandum from Cindy Rosenberg, EPA Region 8, to the Denver PM_{10} Redesignation and Maintenance Plan Docket, regarding the August 16, 2001 version of Regulation No. 1, "Emission Control for Particulates, Smokes, Carbon Monoxide, & Sulfur Oxides."

(I) Letter dated July 31, 2002 from Frank R. Johnson, Assistant Attorney General, Colorado Department of Law, to Jonah Staller, EPA Region 8, explaining a clerical error in the version of Regulation No. 1 referenced in paragraph (c)(95)(i)(A) of this section, assuring the continued enforceability of section VIII.A of Regulation No. 1 regardless of the air quality classification of the Denver area, and indicating that the clerical error will be promptly remedied.

(96) On May 10, 2000, the Governor of Colorado submitted SIP revisions to Colorado's Regulation No. 11 "Motor Vehicle Emissions Inspection Program" that supersede and replace all earlier versions of the Regulation (except Appendices A and B of Regulation No. 11 as approved in paragraph (c)(80)) and make several changes to the motor vehicle inspection and maintenance requirements including the implementation of a remote sensing device (RSD) program for the Denver metropolitan area. On May 10, 2000, the Governor also submitted SIP revisions to Colorado's Regulation No. 13 : "Oxygenated Fuels Program" that supersede and replace all earlier versions of the Regulation and modify the oxygenated fuel requirements for the Denver metropolitan area.

(i) Incorporation by reference.

(A) Regulation No. 11 "Motor Vehicle Emissions Inspection Program", 5 CCR 1001–13, as adopted on January 10, 2000, effective March 1, 2000, as follows: Part A, Part B, Part C, Part D, Part E, and Part F.

(B) Regulation No. 13 "Oxygenated Fuels Program", 5 CCR 1001–16, as adopted on January 10, 2000, effective March 1, 2000, as follows: Sections I.A., I.B., I.C., I.D., I..E., II..A, II.B., II.C., II.D., II.E., II..F., II.G., and II.H.

(97) On November 9, 2001, the State of Colorado submitted a maintenance plan for the Aspen PM_{10} nonattainment area and requested that this area be redesignated to attainment for the PM_{10} National Ambient Air Quality Standards. The redesignation request and maintenance plan satisfy all applicable requirements of the Clean Air Act.

(i) Incorporation by reference.

(A) Colorado Air Pollution Control Division, "State Implementation Plan—Specific Regulations for Nonattainment—Attainment/Maintenance Areas (Local Areas)," 5 CCR 1001–20, revisions adopted January 11, 2001, effective February 28, 2001 as follows: Section III, which is titled "Aspen/Pitkin County PM_{10} Attainment/Maintenance Area," and which supersedes and replaces all prior versions of Section III.

(98) On November 5, 1999 the Governor of Colorado submitted a revision to Regulation No. 1, "Emission Control for Particulates, Smokes, Carbon Monoxide and Sulfur Dioxide." The November 5, 1999 submittal exempts military training exercises at the United States Army Installation Fort Carson and United States Army Pinon Canon Maneuver Site (PCMS) from opacity limits. A new subsection D to Regulation No. 1, section II, has been approved into the SIP.

(i) Incorporation by reference.

(A) Colorado Regulation No. 1, section II, subsection D effective September 30, 1998.

(99) On August 9, 2002, the Governor of Colorado submitted SIP revisions to Colorado's Regulation No. 11 "Motor Vehicle Emissions Inspection Program"

that eliminate the requirement in the SIP for the implementation of a motor vehicle inspection and maintenance program in Larimer County (which includes the Fort Collins area) after January 1, 2004. On August 9, 2002, the Governor also submitted SIP revisions to Colorado's Regulation No. 13 "Oxygenated Fuels Program" that eliminate the oxygenated fuel requirements for Larimer County (which includes the Fort Collins area) after January 1, 2004, and make changes to sections I.D., II.A., II.B., II.C., II.D., II.E., II.F., II.G., and II.H. On August 9, 2002, the Governor also submitted SIP revisions to Colorado's State Implementation Plan Specific Regulations for Nonattainment and Attainment/Maintenance Areas (Local Elements) that eliminate Clean Air Act section 172(c)(9) carbon monoxide contingency measures for the Fort Collins area. We originally approved these contingency measures on December 23, 1997, and our approval was codified in paragraph (c)(71) of this section.

(i) Incorporation by reference.

(A) Regulation No. 11 "Motor Vehicle Emissions Inspection Program", 5 CCR 1001–13, Part A.I, as adopted on July 18, 2002, and effective September 30, 2002.

(B) Regulation No. 13 "Oxygenated Fuels Program", 5 CCR 1001–16, except for section III, as adopted on July 18, 2002, effective September 30, 2002, which supersedes and replaces all prior versions of Regulation No. 13.

(100) EPA is approving a SIP revision submitted by the Governor of Colorado on July 31, 2002, concerning the use of credible evidence for determining compliance and establishing violations. The July 31, 2002 submittal revises Colorado Air Quality Control Commission (AQCC) Common Provisions Regulation by adding Section II.I, Compliance Certifications. Section II.I of Colorado AQCC Common Provisions Regulation is approved into the SIP.

(i) Incorporation by reference.

(A) Colorado Air Quality Control Commission Common Provisions Regulation, Section II.I, effective September 30, 2001.

[37 FR 10855, May 31, 1972]

EDITORIAL NOTE: For FEDERAL REGISTER citations affecting § 52.320, see the List of CFR Sections Affected, which appears in the Finding Aids section of the printed volume and on GPO Access.

§ 52.321 Classification of regions.

The Colorado plan was evaluated on the basis of the following classifications:

Air quality control region	Pollutant				
	Particulate matter	Sulfur oxides	Nitrogen dioxide	Carbon monoxide	Ozone
Pawnee Intrastate	I	III	III	III	III
Metropolitan Denver Intrastate	I	III	III	I	I
Comanche Intrastate	III	III	III	III	III
San Isabel Intrastate	I	III	III	III	III
San Luis Intrastate	III	III	III	III	III
Four Corners Interstate	IA	IA	III	III	III
Grand Mesa Intrastate	III	III	III	III	III
Yampa Intrastate	III	III	III	III	III

[37 FR 10855, May 31, 1972, as amended at 39 FR 16346, May 8, 1974; 44 FR 57409, Oct. 5, 1979]

§ 52.322 Extensions.

The Administrator, by authority delegated under section 188(d) of the Clean Air Act, as amended in 1990, extends for one year (until December 31, 1995) the attainment date for the Denver, Colorado, PM–10 nonattainment area.

[60 FR 52315, Oct. 6, 1995]

§ 52.323 Approval status.

With the exceptions set forth in this subpart, the Administrator approves

Colorado's plan for the attainment and maintenance of the national standards under section 110 of the Clean Air Act. Furthermore, the Administrator finds that the plan satisifies all requirements of Part D, Title 1, of the Clean Air Act as amended in 1977, except as noted below.

[44 FR 57410, Oct. 5, 1979]

§ 52.324 Legal authority.

(a) The requirements of § 51.230(f) of this chapter are not met since the State lacks the authority to require owners or operators of stationary sources to install, maintain, and use emission monitoring devices and to make periodic reports to the State on the nature and amounts of emissions from such stationary sources.

(b) Delegation of authority: Pursuant to section 114 of the Act, Colorado requested a delegation of authority to enable it to require sources to install and maintain monitoring equipment and to report periodically on the nature and amount of their emissions. The Administrator has determined that Colorado is qualified to receive a delegation of the authority it requested. Accordingly, the Administrator delegates to Colorado his authority under section 114(a)(1)(B) and (C) of the Act, i.e., authorityto require sources within the State of Colorado to install and maintain monitoring equipment and to report periodically on the nature and amount of their emissions.

[37 FR 10855, May 31, 1972, as amended at 46 FR 24182, Apr. 30, 1981; 51 FR 40676, Nov. 7, 1986; 62 FR 2914, Jan. 21, 1997]

§ 52.325 [Reserved]

§ 52.326 Area-wide nitrogen oxides (NO_X) exemptions.

The Denver Regional Council of Governments (DRCOG) submitted a NO_X exemption petition to the EPA on May 25, 1994 and submitted supporting documentation via a letter dated August 1, 1994. This petition requested that the Denver metropolitan area, a transitional ozone nonattainment area, be exempted from the requirement to meet the NO_X provisions of the Federal transportation and general conformity rule with respect to ozone. The exemption request was based on monitoring data which demonstrated that the National Ambient Air Quality Standard for ozone had been attained in this area for the 3 years prior to the petition. The EPA approved this exemption request on July 28, 1995.

[60 FR 40291, Aug. 8, 1995]

§§ 52.327–52.328 [Reserved]

§ 52.329 Rules and regulations.

(a) On January 14, 1993, the Governor of Colorado submitted revisions to the State's nonattainment new source review permitting regulations to bring the State's regulations up to date with the 1990 Amendments to the Clean Air Act. With these revisions, the State's regulations satisfy the part D new source review permitting requirements for the following nonattainment areas: the Canon City, Lamar, Pagosa Springs, Aspen, Telluride, and Steamboat Springs moderate PM_{10} nonattainment areas, the Denver/Metro Boulder, Longmont, Colorado Springs, and Fort Collins moderate carbon monoxide nonattainment areas, the Greeley not classified carbon monoxide nonattainment area, and the Denver transitional ozone nonattainment area.

(b) On January 14, 1993 and on August 25, 1994, the Governor of Colorado submitted revisions to the State's nonattainment new source review permitting regulations to bring the State's regulations up to date with the 1990 Amendments to the Clean Air Act. With these revisions, the State's regulations satisfy the part D new source review permitting requirements for the Denver metropolitan moderate PM–10 nonattainment area.

[59 FR 64336, Dec. 14, 1994, as amended at 62 FR 2914, Jan. 21, 1997; 62 FR 68195, Dec. 31, 1997]

§ 52.330 Control strategy: Total suspended particulates.

(a) *Part D—Conditional Approval:* The Pueblo plan is approved assuming the State demonstrates by December 31, 1981, through air quality modeling, attainment of the 24-hour and annual standards, while considering emissions from all sources in the nonattainment area. In addition, the State must repromulgate Regulation No. 1 to satisfy

reasonably available control technology requirements in accordance with the following schedule:

(1) The Commission will consider and adopt for public hearing any changes or additions to Regulation No. 1 by February 15, 1981.

(2) The proposed regulations will be published in the Colorado Register by March 10, 1981.

(3) Public hearing will be held by May 14, 1981.

(4) Regulations will be approved with an effective date no later than July 1, 1981, and submitted to EPA by the same date.

[46 FR 26302, May 12, 1981]

§ 52.331 Committal SIP for the Colorado Group II PM_{10} areas.

On April 14, 1989, the Governor submitted a Committal SIP for the Colorado Group II PM_{10} areas. The SIP commits the State to continue to monitor for PM_{10}, report data and to submit a full SIP if a violation of the PM_{10} National Ambient Air Quality Standards is detected.

[54 FR 43178, Oct. 23, 1989]

§ 52.332 Control strategy: Particulate matter.

(a) On April 9, 1992, the Governor of Colorado submitted the moderate PM–10 nonattainment area plan for the Canon City area. The submittal was made to satisfy those moderate PM–10 nonattainment area SIP requirements which were due for Canon City on November 15, 1991.

(b)(1) On February 24, 1992, and December 9, 1993, the Governor of Colorado submitted the moderate PM–10 nonattainment area plan for the Pagosa Springs area. The submittal was made to satisfy those moderate PM–10 nonattainment area SIP requirements which were due for Pagosa Springs on November 15, 1991.

(2) On August 2, 1996, the Governor of Colorado submitted minor revisions to the Pagosa Springs Element of the Colorado PM–10 SIP.

(c) On May 27, 1993, the Governor of Colorado submitted the moderate PM–10 nonattainment area plan for the Lamar area. The submittal was made to satisfy those moderate PM–10 nonattainment area SIP requirements which were due for Lamar on November 15, 1991.

(d) On December 9, 1993, the Governor of Colorado submitted PM_{10} contingency measures for the moderate PM_{10} nonattainment areas of Canon City, Lamar, and Pagosa Springs. The submittal was made to satisfy the moderate PM_{10} nonattainment area requirements for contingency measures due for Canon City, Lamar, and Pagosa Springs on November 15, 1993.

(e)(1) On January 15, 1992, March 17, 1993, and December 9, 1993, the Governor of Colorado submitted the moderate PM–10 nonattainment area plan for the Aspen area. The submittals were made to satisfy those moderate PM–10 nonattainment area SIP requirements which were due for Aspen on November 15, 1991. The December 9, 1993 submittal was also made to satisfy the PM–10 contingency measure requirements which were due for Aspen on November 15, 1993.

(2) On March 13, 1995, the Governor of Colorado submitted minor revisions to the Aspen Element of the Colorado PM–10 SIP.

(f) On March 30, 1995, and November 17, 1995, the Governor of Colorado submitted the moderate PM_{10} nonattainment area plan for the Denver area. The March 30, 1995 submittal was made to satisfy those moderate PM_{10} nonattainment area SIP requirements due for the Denver PM_{10} nonattainment area on November 15, 1991. The November 17, 1995 submittal was also made to satisfy the PM_{10} contingency measure requirements which were due for Denver on November 15, 1993.

(g) On March 17, 1993, December 9, 1993, and April 22, 1996, the Governor of Colorado submitted the moderate PM_{10} nonattainment area plan for Telluride. The submittals were made to satisfy those moderate PM_{10} nonattainment area SIP requirements which were due for Telluride on November 15, 1991. The December 9, 1993 submittal was also made to satisfy the PM_{10} contingency measure requirements which were due for Telluride on November 15, 1993.

(h) On September 16, 1997 the Governor of Colorado submitted the moderate PM_{10} nonattainment area plan for Steamboat Springs. The submittal

was made to satisfy those moderate PM_{10} nonattainment area SIP requirements which were due for Steamboat Springs on July 20, 1995.

(i) On September 22, 1997, the State of Colorado submitted a maintenance plan for the Canon City PM10 nonattainment area and requested that the area be redesignated to attainment for the PM10 National Ambient Air Quality Standards. An April 24, 2000 letter from Margie Perkins, Director, Colorado Air Pollution Control Division, to Richard Long, Director, EPA Region VIII Air and Radiation Program, was sent to clarify the requirements of the contingency plan section of the Canon City maintenance plan. The redesignation request and maintenance plan satisfy all applicable requirements of the Clean Air Act.

(j) On May 10, 2000, the State of Colorado submitted maintenance plans for the Telluride and Pagosa Springs PM_{10} nonattainment areas and requested that these areas be redesignated to attainment for the PM_{10} National Ambient Air Quality Standards. The redesignation requests and maintenance plans satisfy all applicable requirements of the Clean Air Act.

(k) *Determination*—EPA has determined that the Steamboat Springs PM_{10} "moderate" nonattainment area attained the PM_{10} national ambient air quality standard by December 31, 2000. This determination is based on air quality monitoring data from 1998, 1999, and 2000.

(l) On July 30, 2001, the State of Colorado submitted a maintenance plan for the Denver PM_{10} nonattainment area ("PM–10 Redesignation Request and Maintenance Plan For the Denver Metropolitan Area," Chapter 4: "Maintenance Plan," adopted April 19, 2001 by the Colorado Air Quality Control Commission and effective April 19, 2001) and requested that the area be redesignated to attainment for the PM_{10} National Ambient Air Quality Standards. The redesignation request and maintenance plan satisfy all applicable requirements of the Clean Air Act.

(m) On November 9, 2001, the State of Colorado submitted a maintenance plan for the Aspen PM_{10} nonattainment area and requested that this area be redesignated to attainment for the PM_{10} National Ambient Air Quality Standards. The redesignation request and maintenance plan satisfy all applicable requirements of the Clean Air Act.

[58 FR 68038, Dec. 23, 1993, as amended at 59 FR 26128, May 19, 1994; 59 FR 29734, June 9, 1994; 59 FR 47095, Sept. 14, 1994; 59 FR 64336, Dec. 14, 1994; 62 FR 18723, Apr. 17, 1997; 62 FR 66008, Dec. 17, 1997; 62 FR 68195, Dec. 31, 1997; 65 FR 34404, May 30, 2000; 66 FR 32562, June 15, 2001; 66 FR 55105, Nov. 1, 2001; 67 FR 58338, Sept. 16, 2002; 68 FR 26219, May 15, 2003]

§§ 52.333–52.342 [Reserved]

§ 52.343 Significant deterioration of air quality.

(a) The requirements of sections 160 through 165 of the Clean Air Act are not met for the following categories of sources for preventing the significant deterioration of air quality:

(1) Sources locating on Indian lands.

(2) Sources locating on Indian Reservations.

(3) Sources which constructed prior to September 2, 1986 and which have not otherwise subjected themselves to Colorado's PSD permitting regulations after September 2, 1986, either through application to Colorado for a PSD permit (in the case of those sources which improperly constructed without obtaining a PSD permit) or through application to Colorado for a major modification to the source.

(b) Regulations for preventing significant deterioration of air quality. The provisions of § 52.21 except paragraph (a)(1) are hereby incorporated and made a part of the applicable State plan for the State of Colorado for the sources identified in paragraph (a) of this section as not meeting the requirements of sections 160–165 of the Clean Air Act.

(c) The State of Colorado has clarified the generalized language contained in the Colorado Air Quality Control Regulations on the use of "applicable air quality models." In a letter to Douglas M. Skie, EPA, dated May 19, 1989, Bradley J. Beckham, Director of the Air Pollution Control Division stated:

* * * All PSD permits reviewed by the Division will use the revised modeling guideline mentioned above [Guideline on Air Quality Models (Revised), EPA 450/2–78–027R including Supplement A (July 1987)] for determining if the air quality models, data bases, and other requirements are generally approved by EPA. Any future revisions (including appendices or supplement) will be incorporated into the Division's protocol for reviewing modeling for PSD permits.

[51 FR 31126, Sept. 2, 1986, and 52 FR 4622, Feb. 13, 1987, as amended at 52 FR 22638, June 15, 1987; 54 FR 27881, July 3, 1989; 57 FR 27000, June 17, 1992; 59 FR 42506, Aug. 18, 1994; 62 FR 2914, Jan. 21, 1997; 62 FR 13336, Mar. 20, 1997; 68 FR 11322, Mar. 10, 2003; 68 FR 74488, Dec. 24, 2003]

§ 52.344 Visibility protection.

(a) A revision to the SIP was submitted by the Governor on December 21, 1987, for visibility general plan requirements, monitoring, and long-term strategies.

(b) The Visibility NSR regulations are approved for industrial source categories regulated by the NSR and PSD regulations which have previously been approved by EPA. However, Colorado's NSR and PSD regulations have been disapproved for certain sources as listed in 40 CFR 52.343(a)(1). The provisions of 40 CFR 52.26 and 52.28 are hereby incorporated and made a part of the applicable plan for the State of Colorado for these sources.

[50 FR 28553, July 12, 1985, as amended at 52 FR 45137, Nov. 24, 1987; 53 FR 30431, Aug. 12, 1988; 53 FR 48539, Dec. 1, 1988; 59 FR 51379, Oct. 11, 1994]

§ 52.345 Stack height regulations.

The State of Colorado has committed to revise its stack height regulations should EPA complete rulemaking to respond to the decision in *NRDC* v. *Thomas*, 838 F. 2d 1224 (DC Cir. 1988). In a letter to Mr. Douglas M. Skie, EPA, dated May 9, 1988, Bradley J. Beckham, Director of the Colorado Air Pollution Control Division stated:

* * * We are submitting this letter to allow EPA to continue to process our current SIP submittal with the understanding that if EPA's response to the NRDC remand modified the July 8, 1985, regulations, EPA will notify the state of the rules that must be changed to comply with the EPA's modified requirements. The State of Colorado agrees to make appropriate changes.

[54 FR 24340, June 7, 1989]

§ 52.346 Air quality monitoring requirements.

In a letter and submittal dated July 7, 1993, from the Governor of Colorado to the EPA Region VIII Administrator, the State submitted a revised Air Quality Monitoring State Implementation Plan. The plan was adopted by the State on March 18, 1993, and completely replaces the previous version of the Air Quality Monitoring plan as identified at 40 CFR 52.320 (c)(17). The revisions updated the plan to bring it into conformance with the Federal requirements for air quality monitoring as found in 40 CFR part 58. The State commits to meet these Federal requirements.

[58 FR 49435, Sept. 23, 1993]

§ 52.347 [Reserved]

§ 52.348 Emission inventories.

(a) The Governor of the State of Colorado submitted the 1990 carbon monoxide base year emission inventories for the Colorado Springs, Denver/Longmont, and Fort Collins nonattainment areas on December 31, 1992, as a revision to the State Implementation Plan (SIP). The Governor submitted revisions to the Colorado Springs and Fort Collins inventories by a letter dated March 23, 1995. The Governor submitted revisions to the Denver/Longmont inventory by letters dated July 11, 1994, and October 21, 1994. The inventories address emissions from point, area, on-road mobile, and non-road sources. These 1990 base year carbon monoxide inventories satisfy the requirements of section 187(a)(1) of the Clean Air Act for each of these nonattainment areas.

(b) On September 16, 1997, the Governor of Colorado submitted the 1993 Carbon Monoxide Periodic Emission Inventories for Colorado Springs, Denver, Fort Collins, and Longmont as revisions to the Colorado State Implementation Plan. These inventories address carbon monoxide emissions from stationary point, area, non-road mobile, and on-road mobile sources.

(c) On September 16, 1997, the Governor of Colorado submitted the 1990 Carbon Monoxide Base Year Emission Inventory for Greeley as a revision to the Colorado State Implementation Plan. This inventory addresses carbon monoxide emissions from stationary point, area, non-road, and on-road mobile sources.

(d) On May 10, 2000, the Governor of Colorado submitted the 1996 Carbon Monoxide Periodic Emission Inventories for Denver and Fort Collins, as a revision to the Colorado State Implementation Plan. The inventories address carbon monoxide emissions from stationary point, area, non-road mobile, and on-road mobile sources.

[61 FR 67469, Dec. 23, 1996, as amended at 63 FR 38089, July 15, 1998; 64 FR 11782, Mar. 10, 1999; 65 FR 63548, Oct. 24, 2000]

§ 52.349 Control strategy: Carbon monoxide.

(a) Revisions to the Colorado State Implementation Plan, Carbon Monoxide Redesignation Request and Maintenance Plan for Greeley, as adopted by the Colorado Air Quality Control Commission on September 19, 1996, State effective November 30, 1996, and submitted by the Governor on September 16, 1997.

(b) On June 25, 1996, the Governor of Colorado submitted a revision to the Colorado Springs element of the carbon monoxide (CO) portion of the Colorado State Implementation Plan (SIP). The revision to the Colorado Springs element was submitted to satisfy certain requirements of part D and section 110 of the Clean Air Act (CAA) as amended 1990. The revision substitutes Colorado's oxygenated gasoline program for the Colorado Springs bus purchase program as a source of emissions reductions credits in the Colorado Springs CO element of the SIP. This revision removes the bus purchase program from the EPA-approved SIP. EPA originally approved the bus purchase program as part of the Colorado Springs CO element of the SIP on December 12, 1983 (48 FR 55284).

(c) Revisions to the Colorado State Implementation Plan, Carbon Monoxide Redesignation Request and Maintenance Plan for Colorado Springs, as adopted by the Colorado Air Quality Control Commission on January 15, 1998, State effective March 30, 1998, and submitted by the Governor on August 19, 1998. The Maintenance Plan removes the Clean Air Campaign from the SIP. The Clean Air Campaign was approved into the SIP at 40 CFR 52.320(c)(43)(i)(A).

(d) Revisions to the Colorado State Implementation Plan, Carbon Monoxide Redesignation Request and Maintenance Plan for Longmont, as adopted by the Colorado Air Quality Control Commission on December 18, 1997, State effective March 2, 1998, and submitted by the Governor on August 19, 1998.

(e) Revisions to the Colorado State Implementation Plan, Carbon Monoxide Revised Maintenance Plan for Colorado Springs, as adopted by the Colorado Air Quality Control Commission on February 17, 2000, State effective April 30, 2000, and submitted by the Governor on May 10, 2000.

(f) *Determination*. EPA has determined that the Denver carbon monoxide "serious" nonattainment area attained the carbon monoxide national ambient air quality standard by December 31, 2000. This determination is based on air quality monitoring data from 1998, 1999, and 2000.

(g) Revisions to the Colorado State Implementation Plan, carbon monoxide NAAQS Redesignation Request and Maintenance Plan for Denver entitled "Carbon Monoxide Redesignation Request and Maintenance Plan for the Denver Metropolitan Area, "excluding Chapter 1, Chapter 2, and Appendix C, as adopted by the Colorado Air Quality Control Commission on January 10, 2000, State effective March 1, 2000, and submitted by the Governor on May 10, 2000.

(h) Revisions to the Colorado State Implementation Plan, carbon monoxide NAAQS Redesignation Request and Maintenance Plan for Fort Collins entitled "Carbon Monoxide Redesignation Request and Maintenance Plan for the Fort Collins Area," excluding Part I—Chapter 1 and Part I—Chapter 2, as adopted by the Colorado Air Quality Control Commission on July 18, 2002, State effective September 30, 2002, and

submitted by the Governor on August 9, 2002.

[64 FR 11782, Mar. 10, 1999, as amended at 64 FR 17105, Apr. 8, 1999; 64 FR 46288, Aug. 25, 1999; 64 FR 51701, Sept. 24, 1999; 65 FR 80783, Dec. 22, 2000; 66 FR 34116, June 27, 2001; 66 FR 64757, Dec. 14, 2001; 68 FR 35791, June 17, 2003; 68 FR 43325, July 22, 2003]

§ 52.350 Control strategy: Ozone.

Revisions to the Colorado State Implementation Plan, 1-hour ozone NAAQS Redesignation Request and Maintenance Plan for Denver entitled "Ozone Redesignation Request and Maintenance Plan for the Denver Metropolitan Area,'excluding Chapter 1 and Appendix B, as adopted by the Colorado Air Quality Control Commission on January 11, 2001, State effective March 4, 2001, and submitted by the Governor on May 7, 2001.

[66 FR 47092, Sept. 11, 2001]

§ 52.351 United States Postal Service substitute Clean Fuel Fleet Program.

Revisions to the Colorado State Implementation Plan, carbon monoxide NAAQS, United States Postal Service substitute clean-fuel vehicle program, as allowed under section 182(c)(4)(B) of the Clean Air Act, to address the requirements of section 246 of the Clean Air Act for the Denver Metropolitan carbon monoxide nonattainment area. The revisions were adopted by the Colorado Air Quality Control Commission on March 16, 2000, State effective May 30, 2000, and submitted by the Governor on May 7, 2001. Administrative corrections to the Governor's May 7, 2001, submittal were submitted by the Colorado Attorney General's office on May 30, 2001.

[66 FR 64758, Dec. 14, 2001]

Subpart H—Connecticut

§ 52.369 [Reserved]

§ 52.370 Identification of plan.

(a) Title of plan: "State of Connecticut Air Implementation Plan."

(b) The plan was officially submitted on March 3, 1972.

(c) The plan revisions listed below were submitted on the dates specified.

(1) Miscellaneous non-regulatory addition to the plan and addition of amendment to Chapter 360 of General Statutes which provides authority for delegation of enforcement authority submitted on March 21, 1972, by the Connecticut Department of Environmental Protection.

(2) Miscellaneous non-regulatory additions to the plan submitted on April 6, 1972, by the Connecticut Department of Environmental Protection.

(3) Attainment dates submitted on August 10, 1972, by the Connecticut Department of Environmental Protection.

(4) Regulation 19–508–100 requiring a review of indirect sources submitted on January 9, 1974, by the Connecticut Department of Environmental Protection.

(5) AQMA identification material submitted on April 15, 1974, by the Connecticut Department of Environmental Protection.

(6) Indirect Source Review Regulation 19–508–100 resubmitted on August 26, 1974, by the Connecticut Department of Environmental Protection.

(7) [Reserved]

(8) Revision to Chapter 8, Air Quality Surveillance, submitted on June 30, 1977, by the Governor.

(9) Revision to Indirect Source Review Regulation 19–508–100 submitted on June 13, 1977, by the Connecticut Department of Environmental Protection.

(10) A revision to Regulation 19–508–19(a)(2)(i) submitted by the Commissioner of the Connecticut Department of Environmental Protection on April 16, 1979, granting a variance until April 1, 1981, to Northeast Utilities.

(11) State Implementation Plan revisions to meet the requirements of part D of the Clean Air Act, as amended in 1977, were submitted on June 22, 1979, and received on June 27, 1979; submitted on December 18, 1979 and received on December 28, 1979; submitted on January 28, 1980, and received on February 1, 1980; submitted and received on May 1, 1980; submitted and received on June 5, 1980; submitted on September 2, 1980, and received on September 8, 1980; and submitted and received on November 12, 1980. Included are plans to attain: The primary TSP standard in Greenwich and Waterbury and the carbon monoxide and ozone

standards statewide. A program was also submitted for the review of construction and operation of new and modified major stationary sources of pollution in non-attainment areas. Certain miscellaneous provisions are also included.

(12) A revision to Regulation 19–508–19(a)(2)(i), submitted by the Commissioner of the Connecticut Department of Environmental Protection on September 8, 1980, granting a variance until March 27, 1983, to the Federal Paperboard Company, Inc.

(13) A comprehensive air quality monitoring plan, intended to meet requirements of 40 CFR part 58, was submitted by the Connecticut Department of Environmental Protection Commission on June 9, 1980, and November 17, 1980.

(14) Non-regulatory additions to the plan which were submitted on December 19, 1980, and amended on March 11, 1981, by the Connecticut Department of Environmental Protection amending the sulfur control strategy to include an "Air Pollution Control/Energy Trade Option" except for submittal attachments #1 and #2, "Sulfur Dioxide" and "Transport of Sulfur Dioxide" and the section of attachment #3 "Control of Sulfur Oxides" entitled "Sample Analysis of a Btu Bubble Application".

(15) Non-regulatory addition to the plan of the state *New Source Ambient Impact Analysis Guideline*, for use in State program actions, submitted on December 19, 1980, and amended on March 11, 1981, and July 15, 1981.

(16) Revisions to regulation 19–508–4 (source monitoring requirements) and regulation 19–508–5 (stack emissions testing) submitted on November 7, 1977, by the Commissioner of the Connecticut Department of Environmental Protection.

(17) A revision to Regulation 19–508–19(a)(2)(i), submitted by the Commissioner of the Connecticut Department of Environmental Protection on June 23, 1981, granting a temporary variance to Uniroyal Chemical, Division of Uniroyal, Inc.

(18) Revisions to Regulation 19–508–19 (Control of Sulfur Compound Emissions), Regulation 19–508–24 (Connecticut Primary and Secondary Standards), and accompanying narrative submitted by the Commissioner of the Connecticut Department of Environmental Protection on October 23, 1981, and November 4, 1981.

(19) Revisions submitted by the Commissioner of the Connecticut Department of Environmental Protection on November 16, 1981. These provisions supersede portions of the revisions identified under paragraph (c)(18).

(20) Revisions to meet the requirements of part D and certain other sections of the Clean Air Act, as amended, were submitted on December 15, 1980, May 29, 1981, and May 5, 1982. Included are changes to the State Ozone Control Plan involving adoption of Regulation 19–508–20(k) controlling the use of cutback asphalt, the approval of the RFP demonstration for ozone attainment, a refined inventory of miscellaneous stationary sources of Volatile Organic Compounds, changes to Regulation 19–508–3(1) dealing with review of new and modified stationary sources, and an amendment to the State's Smoke and Opacity monitoring requirements.

(21) [Reserved]

(22) Revisions to the narrative and State Regulation 19–508–18, subparts (d), f(1), f(2), and part of f(3), governing total suspended particulate emissions, submitted by the Commissioner of the Connecticut Department of Environmental Protection on April 8, 1982.

(23) Regulation 19–508–20(cc), Alternative Emission Reductions as it applies to Regulation 19–508–20: (m), can coating; (n), coil coating; (o), fabric and vinyl coating; (p), metal furniture coating; (q), paper coating; (r), wire coating; (s), miscellaneous metal parts; (t), manufacture of synthesized pharmaceutical products and (v), graphic arts—rotogravure and flexography, was submitted on December 15, 1980, and January 11, 1982, by the Commissioner of the Department of Environmental Protection.

(24) Revision for Sikorsky Aircraft Division of United Technologies received from the Commissioner of the Connecticut Department of Environmental Protection on June 2 and July 16, 1982. This provision supersedes a portion of the revisions identified under (c)(18).

(25) Revisions to meet ozone attainment requirements of Part D (Group II

CTG regulations), the adoption of a lead standard and the revision of the ozone standard, submitted on December 15, 1980, are approved as follows: Regulations 19–508–20 (s), (t), (v), (w), (aa), (bb), and (dd), Regulation 19–508–8 and Regulation 19–508–24(i)(l).

(26) Revision for Dow Chemical U.S.A. in Gale's Ferry submitted by the Commissioner of the Connecticut Department of Environmental Protection on December 20, 1982, including state order 7002B signed on May 27, 1982. This provision supersedes a portion of the revisions identified under paragraph (c)(18).

(27) Revision for Lydall and Foulds Division of Lydall, Inc., submitted by the Commissioner of the Connecticut Department of Environmental Protection on December 17, 1982, and January 5, 1983, allowing the facility to burn higher sulfur oil under the State Energy Trade Program.

(28) Revision for Simkins Industries, Inc., in New Haven submitted by the Commissioner of the Connecticut Department of Environmental Protection on January 19, 1983, allowing the facility to burn higher sulfur oil under the Sulfur Energy Trade Program.

(29) Attainment plan revisions to meet the requirements of Part D for ozone were submitted by the Department of Environmental Protection on December 10, 1982, and May 19, 1983. These revisions control volatile organic compound (VOC) emissions from solvent metal cleaners through emission limitations contained in Regulation 19–508–20(*1*) and supporting narrative committing the DEP to implement an educational program for automobile repair facilities. Approval of these revisions allowed EPA to rescind the moratorium on construction and modification of major sources of VOCs which had been in effect since October 1982.

(30) Revision for Loomis Institute in Windsor, submitted by the Commissioner of the Connecticut Department of Environmental Protection on March 30 and July 13, 1983, allowing the facility to burn 2.0 percent sulfur oil under the Sulfur Energy Trade Program.

(31) Revisions demonstrating the attainment and maintenance of the lead standard were submitted on October 18, 1983.

(32) Attainment plan revisions to meet the requirements of part D for ozone and carbon monoxide were submitted by the Department of Environmental Protection on December 10, 1982, January 7, 1983, January 21, 1983, May 19, 1983, June 15, 1983, September 19, 1983, and December 15, 1983. The revisions control volatile organic compound (VOC) and carbon monoxide emissions through a mix of stationary and mobile source controls. EPA approval includes the following regulatory provisions:

(i) Regulation 22a–174–20(ee) limiting emissions from major nonCTG source categories, and

(ii) Regulations 22a–174–27 and 14–164c describing the requirements for Connecticut's motor vehicle Inspection and Maintenance Program.

(33) Revision to Regulation 19–508–20(cc), "Alternative Emission Reductions" [made part of the SIP under paragraph (c)(23) of this section] to add Regulation 19–508–20(ee) to the list of VOC regulations that may be met by bubbling under Connecticut's generic rule after source-specific RACT determinations have been made part of the SIP. Revisions requiring sources subject to Regulation 19–508–20(ee) to comply with 19–508–20 (aa), (bb), and (dd). These revisions were submitted by the Connecticut Department of Environmental Protection on September 20, 1983.

(34) Revisions to the Ozone Attainment Plan were submitted by the Commissioner of the Connecticut Department of Environmental Protection on April 22, 1985.

(i) Incorporation by reference.

(A) Amendments to Regulation 22a–174–1, Definitions; Regulation 22a–174–20(a), Storage of Volatile Organic Compounds; Regulation 22a–174–20(b), Loading of Gasoline and Other Volatile Organic Compounds; and Regulation 22a–174–20(k), Restrictions on Cutback Asphalt, effective December 17, 1984.

(ii) Additional material.

(A) *Source Test Guidelines and Procedures.*

(B) *Workshop Manual for Gasoline Tank Truck Certification.*

(C) Appendix B of *Control of Volatile Organic Compound Leaks from Gasoline Tank Trucks and Vapor Collection Systems* (EPA–450/2–78–051).

(35) Revisions to the State Implementation Plan were submitted December 15, 1980, and May 16, 1985, by the Commissioner of the Department of Environmental Protection.

(i) Incorporation by reference.

(A) Amendments to Department of Environmental Protection Regulation 19–508–24(a)(4), "Acceptable Method" adopted by the State on October 8, 1980.

(ii) Additional material.

(A) A letter dated May 16, 1985, certifying that an "Acceptable Method" shall be interpreted to mean that any monitoring method used to collect ambient air pollution data used for attainment status evaluation or designation must be approved by EPA.

(36) Revision to the State Implementation Plan submitted on April 18, 1986, by the Commissioner of the Department of Environmental Protection.

(i) Incorporated by reference:

(A) State Order No. 943 for Connecticut Charcoal Co., effective April 18, 1986, establishing and requiring reasonably available control technology for the control of volatile organic compounds from this facility.

(37) Revisions to the State Implementation Plan submitted by the Connecticut Department of Environmental Protection on April 18, 1986, and February 3, 1987.

(i) Incorporation by reference.

(A) State Order No. 944 for King Industries, Inc. dated April 18, 1986, which establishes and requires reasonably available control technology for the control of volatile organic compounds from this facility.

(B) A letter from the Connecticut Department of Environmental Protection dated February 3, 1987, which states that the effective date of State Order No. 944 is May 28, 1986.

(38) Revisions to the State Implementation Plan were submitted by the Connecticut Department of Environmental Protection (DEP) on April 14, 1987.

(i) Incorporation by reference.

(A) Letter dated April 14, 1987, from the Connecticut Department of Environmental Protection submitting revisions to the State Implementation Plan for EPA approval.

(B) Letter dated April 1, 1987, from the Secretary of State of Connecticut to EPA.

(C) Section 22a–174–20(x) of Connecticut's Regulations for the Abatement of Air Pollution titled, "Control of Volatile Organic Compound Leaks from Synthetic Organic Chemical & Polymer Manufacturing Equipment," effective April 1, 1987.

(D) Section 22a–174–20(y) of Connecticut's Regulations for the Abatement of Air Pollution titled, "Manufacture of Polystyrene Resins," effective April 1, 1987.

(E) Amendments to subsection 22a–174–20(bb) of Connecticut's Regulations for the Abatement of Air Pollution titled, "Compliance Methods," effective April 1, 1987.

(ii) Additional material.

(A) Letter from the Connecticut DEP dated July 3, 1986, committing the Connecticut DEP to use only EPA approved test methods when requiring the testing of sources emitting volatile organic compound emissions.

(B) Letter from the Connecticut DEP dated May 29, 1987, certifying that there are no polypropylene or high-density polyethylene manufacturers in the State of Connecticut.

(39) Revisions to the State Implementation Plan submitted by the Connecticut Department of Environmental Protection on August 24, 1987.

(i) Incorporation by reference.

(A) Letter from the Connecticut Department of Environmental Protection dated August 24, 1987, submitting a revision to the Connecticut State Implementation Plan.

(B) State Order No. 8007 for Belding Corticelli Thread Company dated July 13, 1987.

(40) [Reserved]

(41) Revision to the Connecticut State Implementation Plan submitted by the Commissioner of the Department of Environmental Protection on February 3, 1987.

(i) Incorporation by reference.

(A) A letter from the Connecticut Department of Environmental Protection dated February 3, 1987, which states that the effective date of State Order

No. 943, approved previously, for Connecticut Charcoal Co. is May 28, 1986.

(42) Revisions to the State Implementation Plan submitted by the Connecticut Department of Environmental Protection on October 27, 1987.

(i) Incorporation by reference.

(A) Letter from the Connecticut Department of Environmental Protection dated October 27, 1987, submitting a revision to the Connecticut State Implementation Plan.

(B) State Order No. 8013 and attached Compliance Timetable for Raymark Industries, Incorporated in Stratford, Connecticut effective on September 24, 1987.

(ii) Additional material.

(A) Technical Support Document prepared by the Connecticut Department of Environmental Protection providing a complete description of the reasonably available control technology determination imposed on the facility.

(43) Revisions to the State Implementation Plan submitted by the Connecticut Department of Environmental Protection on February 5, 1988.

(i) Incorporation by reference. (A) Letter from the Connecticut Department of Environmental Protection dated February 5, 1988, submitting a revision to the Connecticut State Implementation Plan.

(B) State Order No. 8012 and attached Compliance Timetable, Appendix A (allowable limits on small, uncontrolled vents), and Appendix B (fugitive leak detection program) for American Cyanamid Company in Wallingford, Connecticut. State Order No. 8012 was effective on January 6, 1988.

(ii) Additional material. (A) Technical Support Document prepared by the Connecticut Department of Environmental Protection providing a complete description of the reasonably available control technology determination imposed on the facility.

(44) Revisions to the State Implementation Plan submitted by the Connecticut Department of Environmental Protection on August 31, 1987.

(i) Incorporation by reference.

(A) Letter from the Connecticut Department of Environmental Protection dated August 31, 1987, submitting a revision to the Connecticut State Implementation Plan.

(B) State Order No. 8008 and attached Compliance Timetable and Appendix A (allowable limits by product classification) for Spongex International, Ltd. in Shelton, Connecticut. State Order No. 8008 was effective on August 21, 1987.

(ii) Additional materials.

(A) Technical Support Document prepared by the Connecticut Department of Environmental Protection providing a complete description of the reasonably available control technology determination imposed on the facility.

(45) [Reserved]

(46) Revisions to the State Implementation Plan submitted by the Connecticut Department of Environmental Protection on July 26, 1988.

(i) Incorporation by reference.

(A) Letter from the Connecticut Department of Environmental Protection dated July 26, 1988, submitting a revision to the Connecticut State Implementation Plan.

(B) State Order No. 8023 and attached Compliance Timetable for New Departure Hyatt, Division of General Motors Corporation in Bristol, Connecticut. State Order No. 8023 was effective on July 8, 1988.

(ii) Additional material.

(A) Technical Support Document prepared by the Connecticut Department of Environmental Protection providing a complete description of the reasonably available control technology determination imposed on the facility.

(47) Revisions to the State Implementation Plan submitted by the Connecticut Department of Environmental Protection on November 5, 1987.

(i) Incorporation by reference. (A) Letter from the Connecticut Department of Environmental Protection dated November 5, 1987, submitting a revision to the Connecticut State Implementation Plan.

(B) State Order No. 8001 and attached Compliance Timetable for Frismar, Incorporated in Clinton, Connecticut. State Order No. 8001 was effective on October 20, 1987.

(ii) Additional material. (A) Technical Support Document prepared by the Connecticut Department of Environmental Protection providing a complete description of the alternative reasonably available control technology determination imposed on the facility.

(48) Revisions to the State Implementation Plan submitted by the Connecticut Department of Environmental Protection on December 5, 1988.

(i) Incorporation by reference. (A) Letter from the Connecticut Department of Environmental Protection dated December 5, 1988, submitting a revision to the Connecticut State Implementation Plan.

(B) State Order No. 8011 and attached Compliance Timetable and Appendix A (allowable limits by product classification) for Dow Chemical, U.S.A. in Gales Ferry, Connecticut. State Order No. 8011 was effective on October 27, 1988.

(ii) Additional material. (A) Technical Support Document prepared by the Connecticut Department of Environmental Protection providing a complete description of the reasonable available control technology determination imposed on the facility.

(49) Revisions to the State Implementation Plan submitted by the Connecticut Department of Environmental Protection on January 11, 1989.

(i) Incorporation by reference.

(A) Letter from the Connecticut Department of Environmental Protection dated January 11, 1989, submitting a revision to the Connecticut State Implementation Plan.

(B) State Order No. 8010 and attached Compliance Timetable for Stanadyne, Incorporated in Windsor, Connecticut. State Order No. 8018 was effective on January 3, 1989.

(ii) Additional material.

(A) Technical Support Document prepared by the Connecticut Department of Environmental Protection providing a complete description of the reasonably available control technology determination imposed on the facility.

(50) Revisions to federally approved section 22a-174-20(a) of the Regulations of Connecticut State Agencies, submitted on January 27, 1989, by the Department of Environmental Protection, limiting the volatility of gasoline from May 1 through September 15, beginning 1989 and continuing every year thereafter, including any waivers to such limitations that Connecticut may grant. In 1989, the control period will begin on June 30.

(51) Revisions to the State Implementation Plan submitted by the Connecticut Department of Environmental Protection (DEP) on April 7, 1989.

(i) Incorporation by reference.

(A) Letter from the Connecticut DEP dated April 7, 1989, submitting a revision to the Connecticut State Implementation Plan.

(B) State Order No. 8014 and attached Compliance Timetable for Pratt & Whitney Division of United Technologies Corporation in East Hartford, Connecticut. State Order No. 8014 was effective on March 22, 1989.

(C) State Order No. 8027 and attached Compliance Timetable for Pratt & Whitney Division of United Technologies Corporation in North Haven, Connecticut. State Order No. 8027 was effective on March 31, 1989.

(ii) Additional material.

(A) Technical Support Document prepared by the Connecticut DEP providing a complete description of the reasonably available control technology determination imposed on Pratt and Whitney's East Hartford facility.

(B) Technical Support Document prepared by the Connecticut DEP providing a complete description of the reasonably available control technology determination imposed on Pratt and Whitney's North Haven facility.

(52) Revisions to the State Implementation Plan submitted by the Connecticut Department of Environmental Protection on February 7 and August 30, 1989.

(i) Incorporation by reference.

(A) Letter from the Connecticut Department of Environmental Protection dated February 7, 1989, submitting a revision to the Connecticut State Implementation Plan.

(B) State Order No. 8021 and attached Compliance Timetable, and Appendix A (allowable limits on small, uncontrolled vents and allowable outlet gas temperatures for surface condensers) for Pfizer, Incorporated in Groton, Connecticut. State Order No. 8021, Compliance Timetable and Appendix A were effective on December 2, 1988.

(C) Letter from the Connecticut Department of Environmental Protection dated August 30, 1989, and reorganized Appendix C (fugitive leak detection program) and Appendix D (operation and maintenance program for pollution abatement equipment) to State Order

No. 8021. Appendices C and D were effective on December 2, 1988.

(ii) Additional material.

(A) Technical Support Document prepared by the Connecticut Department of Environmental Protection providing a complete description of the reasonably available control technology determination imposed on the facility.

(53) Revisions to the State Implementation Plan submitted by the Connecticut Department of Environmental Protection on September 8, 1989.

(i) Incorporation by reference. (A) Letter from the Connecticut Department of Environmental Protection dated September 8, 1989, submitting a revision to the Connecticut State Implementation Plan.

(B) State Order No. 8009 and attached Compliance Timetable, Appendix A, Appendix B, and Appendix C for Uniroyal Chemical Company, Inc. in Naugatuck, Connecticut. State Order No. 8009 was effective on September 5, 1989.

(ii) Additional material. (A) Technical Support Document prepared by the Connecticut Department of Environmental Protection providing a complete description of the reasonably available control technology determination imposed on the facility.

(54) Revisions to the State Implementation Plan submitted by the Connecticut Department of Environmental Protection on December 22, 1989.

(i) Incorporation by reference.

(A) Letter from the Connecticut Department of Environmental Protection dated December 22, 1989, submitting a revision to the Connecticut State Implementation Plan.

(B) State Order No. 8029, attached Compliance Timetable, and Tables A through I for Hamilton Standard Division of United Technologies Corporation in Windsor Locks, Connecticut. State Order No. 8029 was effective on November 29, 1989.

(ii) Additional material.

(A) Technical Support Document prepared by the Connecticut DEP providing a complete description of the reasonably available control technology determination imposed on Hamilton Standard.

(55) Revision to the State Implementation Plan submitted by the Connecticut Department of Environmental Protection on January 10, 1990.

(i) Incorporation by reference.

(A) Letter from the Connecticut Department of Environmental Protection dated January 10, 1990, submitting a revision to the Connecticut State Implementation Plan.

(B) State Order No. 8032 and attached Compliance Timetable for the Heminway & Bartlett Manufacturing Company in Watertown, Connecticut. State Order No. 8032 was effective on November 29, 1989.

(ii) Additional material.

(A) Technical Support Document prepared by the Connecticut DEP providing a complete description of the reasonably available control technology determination imposed on The Heminway & Bartlett Manufacturing Company.

(56) Revisions of the State Implementation Plan submitted by the Connecticut Department of Environmental Protection on January 19, 1989, July 28, 1989, and January 26, 1990 (with attached letter of November 28, 1989).

(i) *Incorporation by reference.*

(A) Letters from the Connecticut Department of Environmental Protection dated January 19, 1989, July 28, 1989, and January 26, 1990, (with attached letter of November 28, 1989) submitting revisions to the Connecticut State Implementation Plan.

(B) Section 22a–174–1 of the Regulations of the Connecticut State Agencies Concerning Abatement of Air Pollution entitled "Definitions," effective in the State of Connecticut on October 3, 1989.

(C) Subsection 22a–174–3(k) of the Regulations of the Connecticut State Agencies Concerning Abatement of Air Pollution entitled "Requirements for the Prevention of Significant Deterioration (PSD) Program," effective in the State of Connecticut on October 3, 1989.

(D) Section 22a–174–2, subsections 22a–174–3(a) through (j) and (l), subsection 22a–174–8(c), subsection 22a–174–20(ee), and subsection 22a–174–4(d) of the Regulations of the Connecticut State Agencies Concerning Abatement of Air Pollution entitled "Permits to

Construct and Permits to Operate Stationary Sources or Modifications," effective in the State of Connecticut on February 1, 1989.

(E) Connecticut's Ambient Impact Analysis Guideline dated July 1989 as revised by letter on January 26, 1990.

(ii) *Additional materials.*

(A) State Implementation Plan narrative entitled "New Source Review."

(B) Letter from the Connecticut Department of Environmental Protection regarding implementation of BACT.

(C) Nonregulatory portions of the State Submittal.

(57) [Reserved]

(58) Revisions to the State Implementation Plan submitted by the Connecticut Department of Environmental Protection on November 9, 1989, and September 12, 1991.

(i) *Incorporation by reference.* (A) Letters from the Connecticut Department of Environmental Protection dated November 9, 1989, and September 12, 1991, submitting revisions to the Connecticut State Implementation Plan.

(B) Section 22a–174–20 of the Regulations of the Connecticut Department of Environmental Protection Concerning Abatement of Air Pollution, effective October 31, 1989, except for the last sentence of 22a–174–20(aa)(7).

(59) Revisions to the State Implementation Plan submitted by the Connecticut Department of Environmental Protection on March 24 and April 23, 1992.

(i) Incorporation by reference.

(A) Letter from the Connecticut Department of Environmental Protection dated April 14, 1992, submitting a revision to the Connecticut State Implementation Plan.

(B) State Order No. 1073B and attached compliance timetable for the Stone Connecticut Paperboard Corporation of Uncasville, CT. State Order No. 1073B was effective on February 14, 1992.

(C) Letter from the Connecticut Department of Environmental Protection dated March 24, 1992, submitting a revision to the Connecticut State Implementation Plan.

(D) State Order No. 7016A and attached compliance timetable for the Hartford Hospital of Hartford, CT. State Order No. 7016A was effective on February 5, 1992.

(ii) Additional materials.

(A) Memorandum dated August 17, 1989, approving the modeling analysis for the Stone Container Co.

(B) Modeling Study dated August 9, 1989, for the Stone Container Co.

(C) State Order No 1073A, dated June 12, 1990, and effective July 9, 1990.

(D) Memorandum dated January 3, 1990, approving the modeling analysis for the Hartford Hospital.

(E) Modeling study dated December 28, 1989, for the Hartford Hospital.

(60) Revisions to the State Implementation Plan submitted by the Connecticut Department of Environmental Protection on February 16, 1996.

(i) Incorporation by reference.

(A) Letter from the Connecticut Department of Environmental Protection dated February 16, 1996, submitting a revision to the Connecticut State Implementation Plan.

(B) State Order No. 8010 dated October 25, 1989 for Sikorsky Aircraft Corporation, effective on January 29, 1990, as well as Addendum A and Addendum B to Order No. 8010, effective on February 7, 1996 and September 29, 1995, respectively. The State order and two addenda define and impose RACT on certain VOC emissions at Sikorsky Aircraft Corporation in Stratford, Connecticut

(61) Revisions to the State Implemetation Plan submitted by the Connecticut Department of Environmental Protection on February 28, 1991.

(i) Incorporation by reference.

(A) Letter from the Connecticut Department of Environmental Protection dated February 28, 1991, submitting a revision to the Connecticut State Implementation Plan.

(B) State Order No. 7017 and attached compliance timetable for the Connecticut Light and Power Company of Montville, Connecticut. State Order No. 7017 was effective on February 25, 1991.

(ii) Additional materials.

(A) Memorandum dated September 14, 1990, approving the modeling analysis for Connecticut Light and Power.

(B) Letter dated April 23, 1991, confirming that the revised configuration

approved by State Order No. 7017 will not lead to violations.

(C) Modeling Study dated January 26, 1990, for Connecticut Light and Power.

(62) Revisions to the State Implementation Plan submitted by the Connecticut Department of Environmental Protection on January 12, 1993.

(i) Incorporation by reference.

(A) Letter from the Connecticut Department of Environmental Protection, dated January 12, 1993, submitting a revision to the Connecticut State Implementation Plan.

(B) Section 22a–174–30 of the Connecticut Regulations for the Abatement of Air Pollution, entitled "Dispensing of Gasoline/Stage II Vapor Recovery," dated November 1992.

(C) Letter from the Connecticut Secretary of State's office indicating that the regulation entitled "Dispensing of Gasoline/Stage II Vapor Recovery" became effective on November 24, 1992.

(ii) Additional materials.

(A) Nonregulatory portions of the submittal.

(B) Connecticut Department of Environmental Protection document entitled "Narrative of SIP Revision: Stage II Vapor Recovery," dated January 1993.

(63) Revisions to the State Implementation Plan submitted by the Connecticut Department of Environmental Protection on March 11, 1993.

(i) Incorporation by reference.

(A) Letter from the Connecticut Department of Environmental Protection dated March 11, 1993, submitting a revision to the Connecticut State Implementation Plan.

(B) Connecticut State Order No 7019 dated March 11, 1993, and effective in the State of Connecticut on February 19, 1993.

(ii) Additional materials.

(A) Air Quality Modeling Analysis to Demonstrate SO_2 CAAQS/NAAQS Compliance at the Hamilton Standard Division of United Technologies Corporation Windsor Locks CT; June 1991.

(64) [Reserved]

(65) Revisions to the State Implementation Plan establishing a Small Business Stationary Source Technical and Environmental Compliance Assistance Program were submitted by the Connecticut Department of Environmental Protection on January 12 and August 9, 1993.

(i) Incorporation by reference.

(A) Letter from the Connecticut Department of Environmental Protection dated January 12, 1993, submitting a revision to the Connecticut State Implementation Plan.

(B) Revisions to the State Implementation Plan for the Small Business Stationary Source Technical and Environmental Compliance Assistance Program dated January 1993 and effective on January 12, 1993.

(C) Letter from the Connecticut Department of Environmental Protection dated August 9, 1993, clarifying and updating the January 12, 1993, submittal.

(ii) Additional materials.

(A) Letter from the Connecticut Department of Environmental Protection dated April 6, 1994, clarifying the January 12, 1993, submittal.

(B) Other non-regulatory portions of the State's submittal.

(66) Revisions to the State Implementation Plan submitted by the Connecticut Department of Environmental Protection on January 12, 1993.

(i) Incorporation by reference.

(A) Letter from the Connecticut Department of Environmental Protection dated January 12, 1993 submitting a revision to the Connecticut State Implementation Plan.

(B) Section 22a–174–4(c)(1) of Connecticut Regulations for the Abatement of Air Pollution, under the section entitled "Recordkeeping and Reporting." Section 22a–174–4(c)(1) was previously numbered as 19–508–4(c)(1) in Connecticut's SIP. 19–508–4(c)(1) in Connecticut's SIP. 19–508–4 became effective in the State of Connecticut on October 31, 1977. Connecticut developed an emission statement program using the existing regulatory authority given by section 22a–174–4(c)(1) under the section entitled "Reporting and Recordkeeping".

(ii) Additional information.

(A) State implementation Plan narrative entitled "Revision to State Implementation Plan for Air Quality Emission Statements" which addresses emission statement requirements not discussed specifically in Section 22a–174–4(c)(1).

(B) Nonregulatory portions of the submittal.

(67) [Reserved]

(68) Revisions to the State Implementation Plan submitted by the Connecticut Department of Environmental Protection on March 24, 1994, May 20, 1994, and March 4, 1994.

(i) Incorporation by reference.

(A) Letter from the Connecticut Department of Environmental Protection dated March 24, 1994 submitting a revision to the Connecticut State Implementation Plan.

(B) Letter from the Connecticut Department of Environmental Protection dated May 20, 1994 submitting a supplemental revision to the Connecticut State Implementation Plan.

(C) State Order No. 8073: State of Connecticut vs. City of New Haven (effective September 24, 1993) and attached plan titled "Remedial Action Plan for Prevention of Airborne Particulate Matter and Fugitive Discharge of Visible Emissions in the Alabama Street/East Shore Parkway Area of New Haven."

(D) State Order No. 8074: State of Connecticut vs. Waterfront Enterprises, Inc. (effective November 5, 1993) and attached plan titled "Proposed Operation Plan in Response to Unilateral Order (September 20, 1993)."

(E) State Order No. 8075: State of Connecticut vs. Laydon Construction, (effective September 21, 1993) and attached plan titled "Plan for Control of Fugitive Emissions of PM10 (September 21, 1993)."

(F) State Order No. 8076: State of Connecticut vs. United Illuminating Company (effective December 2, 1993) and attached plan titled "Remediation Plan for Fugitive Emissions: Alabama Street and Connecticut Avenue, New Haven, Connecticut (November 19, 1993)."

(G) State Order No. 8076c: State of Connecticut vs. M. J. Metals, Inc. (effective June 18, 1993).

(H) State Order No. 8078: State of Connecticut vs. New Haven Terminal, Inc. (effective November 15, 1993) and attached plan titled "Fugitive Dust Control Plan (Revised January 19, 1994)."

(I) State Order No. 8079: State of Connecticut vs. Yankee Gas Services Company (effective September 24, 1993) and attached plan titled "Revised Compliance Plan for Consent Order No. 8079 (August 31, 1993)."

(J) Letter from the Connecticut Department of Environmental Protection dated March 4, 1994 (received March 16, 1995) submitting two amendments to the Regulations of Connecticut State Agencies concerning abatement of air pollution: amended Sections 22a–174–24(f) and –24(g) "Connecticut primary and secondary ambient air quality standards for particulate matter" and amended Sections 22a–174–6(a) and –6(b) "'Air Pollution' emergency episode procedures" (both effective July 7, 1993).

(K) Amended Regulations of Connecticut State Agencies: amended Sections 22a–174–24(f) and –24(g) "Connecticut primary and secondary ambient air quality standards for particulate matter" and amended Sections 22a–174–6(a) and –6(b) "'Air Pollution' emergency episode procedures" (both effective July 7, 1993).

(ii) Additional materials.

(A) An attainment plan and demonstration which outlines Connecticut's control strategy and for attainment and maintenance of the PM10 NAAQS, implements and meets RACM and RACT requirements, and provides contingency measures for New Haven.

(B) Nonregulatory portions of the submittal.

(69) Connecticut submitted the Oxygenated Gasoline Program and revisions on January 11, 1993, January 12, 1993, January 14, 1993, and August 1, 1995. This submittal satisfied the requirements of section 211(m) of the Clean Air Act, as amended.

(i) Incorporation by reference.

(A) Letters dated January 11, 1993 and January 12, 1993 which included the oxygenated gasoline program, Regulations of Connecticut State Agencies (RCSA) Section 22a–174–28, with an effective date of November 2, 1992.

(B) A letter dated January 14, 1993 requesting that the RCSA Section 22a–174–28, as submitted on January 11, 1993 and January 12, 1993, be adopted as part of Connecticut's SIP.

(C) A letter dated August 1, 1995, requesting that a revision to RCSA Section 22a–174–28(a), with an effective

date of July 26, 1995, be approved and adopted as part of Connecticut's SIP.

(ii) Additional materials.

(A) The Technical Support Document for the Redesignation of the Hartford Area as Attainment for Carbon Monoxide submitted on September 30, 1994.

(B) Nonregulatory portions of submittals.

(70) Revision to the State Implementation Plan submitted by the Connecticut Department of Environmental Protection on January 13, 1995.

(i) Incorporation by reference.

(A) Letter from the Connecticut Department of Environmental Protection dated January 13, 1995 submitting a revision to the Connecticut State Implementation Plan.

(B) Amended Regulation of Connecticut State Agencies: amended Subsection 22a–174–3(k) "Abatement of air pollution—New Source Review" (effective December 2, 1994).

(ii) Additional materials.

(A) Nonregulatory portions of the submittal.

(71) Revisions to the Connecticut State Implementation Plan (SIP) for carbon monoxide concerning the control of carbon monoxide from mobile sources, dated January 12, 1993, January 14, 1993, April 7, 1994, and August 1, 1995 submitted by the Connecticut Department of Environmental Protection (CT DEP).

(i) Incorporation by reference.

(A) Letter dated August 1, 1995 which included the amendments and revisions to the Regulation of Connecticut State Agencies (RCSA), Section 22a-174–28(a) regarding the definition for the Southwestern Control Area and that portion of the definition of ''control period'' that applies to the Southwestern Control Area with an effective date of July 26, 1995.

(ii) Additional materials.

(A) January 12, 1993 and April 7, 1994, VMT forecasts beginning with the year 1993 and including all subsequent years up to the year of attainment (1995).

(B) January 12, 1993 and April 7, 1994, Carbon Monoxide Attainment Demonstration and Contingency Measures.

(72) Revisions to the State Implementation Plan submitted by the Connecticut Department of Environmental Protection on: May 18, 1995; August 21, 1995; January 17, 1996; January 30, 1996; January 30, 1996; January 30, 1996; January 30, 1996; June 17, 1996; June 20, 1996; June 24, 1996; July 9, 1996; July 11, 1996; February 18, 1997; March 20, 1997; March 24, 1997; March 24, 1997; March 24, 1997; March 24, 1997; March 24, 1997; April 22, 1997; April 22, 1997; May 19, 1997; May 19, 1997; and May 20, 1997.

(i) Incorporation by reference.

(A) Twenty-four letters from the Connecticut Department of Environmental Protection dated: May 18, 1995; August 21, 1995; January 17, 1996; June 24, 1996; January 30, 1996; January 30, 1996; January 30, 1996; January 30, 1996; June 20, 1996; June 17, 1996; July 11, 1996; July 9, 1996; March 24, 1997; May 19, 1997; March 24, 1997; March 20, 1997; March 24, 1997; February 18, 1997; May 19, 1997; March 24, 1997; March 24, 1997; May 20, 1997; April 22, 1997; and April 22, 1997; submitting revisions to the Connecticut State Implementation Plan.

(B) Connecticut Trading Agreement and Order no. 8092 issued to United Illuminating Company's Station #3 in Bridgeport, effective on May 18, 1995.

(C) Connecticut Trading Agreement and No. 8095 issued to American Ref-Fuel Company of Southeastern Connecticut in Preston, effective on June 2, 1995.

(D) Connecticut Trading Agreement and Order no. 8093 issued to Pfizer, Inc., in Groton, effective on July 19, 1995.

(E) Connecticut Trading Agreement and Order no. 8096 issued to Food Ingredients Company in New Milford, effective on August 25, 1995.

(F) Connecticut Trading Agreement and Order no. 8106 issued to Connecticut Light and Power Company in Middletown, effective on October 10, 1995.

(G) Connecticut Trading Agreement and Order no. 8107 issued to Northeast Nuclear Energy Company in Waterford, effective on October 13, 1995.

(H) Connecticut Trading Agreement and Order no. 8105 issued to Electric Boat Division of General Dynamics in Groton, effective on October 31, 1995.

(I) Connecticut Trading Agreement and Order no. 8100 issued to Bridgeport RESCO Company in Bridgeport, effective on November 2, 1995.

(J) Connecticut Trading Agreement and Order no. 8102 issued to United

Illuminating's auxiliary boiler in New Haven, effective on December 15, 1995.

(K) Connecticut Trading Agreement and Order no. 8103 issued to United Illuminating Company's Station #4 in New Haven, effective on February 14, 1996.

(L) Connecticut Trading Agreement and Order no. 8119 issued to the City of Norwich, Department of Public Utilities, effective on March 4, 1996.

(M) Connecticut Trading Agreement and Order no. 8118 issued to South Norwalk Electric Works, South Norwalk, effective on March 19, 1996.

(N) Connecticut Trading Agreement and Order no. 8101 issued to the State of Connecticut Department of Mental Health and Addiction Services, effective on July 16, 1996.

(O) Connecticut Trading Agreement and Order no. 8110 issued to Yale University, effective on July 29, 1996.

(P) Connecticut Trading Agreement and Order no. 8132 issued to Bridgeport Hospital, effective on September 10, 1996.

(Q) Connecticut Trading Agreement and Order no. 1494 issued to Connecticut Light and Power, involving Branford, Cos Cob, Devon, Franklin Drive, Montville, Middletown, South Meadow, Torrington, Tunnel Road, and Norwalk Harbor Stations, effective on October 15, 1996.

(R) Connecticut Trading Agreement and Order no. 8130 issued to the State of Connecticut Department of Public Works, effective on October 18, 1996.

(S) Connecticut Trading Agreement and Order no. 8115 issued to the University of Connecticut in Storrs, effective on November 19, 1996.

(T) Connecticut Trading Agreement and Order no. 8113 issued to Simkins Industries, effective on November 19, 1996.

(U) Connecticut Trading Agreement and Order no. 8135 issued to Bridgeport Hydraulic Company, effective on December 24, 1996.

(V) Connecticut Trading Agreement and Order no. 8141 issued to the Town of Wallingford Department of Public Utilities, effective on December 27, 1996.

(W) Regulations 22a–174–22 "Control of Nitrogen Oxides Emissions," adopted on January 23, 1997, which establishes reasonably available control technology requirements for major stationary sources of nitrogen oxides.

(X) Connecticut Trading Agreement and Order no. 8123 issued to the Algonquin Gas Transmission Company, effective on April 18, 1997.

(Y) Connecticut Trading Agreement and Order no. 8116 issued to the Connecticut Resource Recovery Authority, effective on April 22, 1997.

(ii) Additional materials.

(A) Letter, dated June 18, 1996, from Carmine DiBattista, Chief of the Bureau of Air Management for the Connecticut DEP, to Susan Studlien, Deputy Director of the Office of Ecosystem Protection at U.S. EPA, Region I.

(B) SIP narrative materials, dated May 1995, submitted with Connecticut Trading Agreement and Order no. 8092 for United Illuminating Company's Station #3 in New Haven.

(C) SIP narrative materials, dated August 3, 1995, submitted with Connecticut Trading Agreement and Order no. 8095 for American Ref-Fuel Company of Southeastern Connecticut in Preston.

(D) SIP narrative materials, dated December 1995, submitted with Connecticut Trading Agreement and Order no. 8093 issued to Pfizer, Inc., in Groton.

(E) SIP narrative materials, dated November 1995, submitted with Connecticut Trading Agreement and Order no. 8096 issued to Food Ingredients Company in New Milford.

(F) SIP narrative materials, dated November 1995, submitted with Connecticut Trading Agreement and Order no. 8106 issued to Connecticut Light and Power Company in Middletown.

(G) SIP narrative materials, dated November 1995, submitted with Connecticut Trading Agreement and Order no. 8107 issued to Northeast Nuclear Energy Company in Waterford.

(H) SIP narrative materials, dated October 6, 1995, submitted with Connecticut Trading Agreement and Order no. 8105 issued to Electric Boat Division of General Dynamics in Groton.

(I) SIP narrative materials, dated September 29, 1995, submitted with Connecticut Trading Agreement and Order no. 8100 issued to Bridgeport RESCO Company in Bridgeport.

(J) SIP narrative materials, dated December 1995, submitted with Connecticut Trading Agreement and Order no. 8102 issued to United Illuminating's auxiliary boiler in New Haven.

(K) SIP narrative materials, dated March 1996, submitted with Connecticut Trading Agreement and Order no. 8103 issued to United Illuminating Company's Station #4 in Bridgeport.

(L) SIP narrative materials, dated May 31, 1995, submitted with Connecticut Trading Agreement and Order no. 8119 issued to the City of Norwich, Department of Public Utilities.

(M) SIP narrative materials, dated May 31, 1995, submitted with Connecticut Trading Agreement and Order no. 8118 issued to South Norwalk Electric Works, South Norwalk.

(N) SIP narrative materials, dated March 1997, submitted with Connecticut Trading Agreement and Order no. 8101 issued to the State of Connecticut Department of Mental Health and Addiction Services.

(O) SIP narrative materials, dated May 1997, submitted with Connecticut Trading Agreement and Order no. 8110 issued to Yale University.

(P) SIP narrative materials, dated March 1997, submitted with Connecticut Trading Agreement and Order no. 8132 issued to Bridgeport Hospital.

(Q) SIP narrative materials, dated March 1997, submitted with Connecticut Trading Agreement and Order no. 1494 issued to Connecticut Light and Power, involving Branford, Cos Cob, Devon, Franklin Drive, Montville, Middletown, South Meadow, Torrington, Tunnel Road, and Norwalk Harbor Stations.

(R) SIP narrative materials, dated March 1997, submitted with Connecticut Trading Agreement and Order no. 8130 issued to the State of Connecticut Department of Public Works.

(S) SIP narrative materials, dated February 1996, submitted with Connecticut Trading Agreement and Order no. 8115 issued to the University of Connecticut in Storrs.

(T) SIP narrative materials, dated May 1997, submitted with Connecticut Trading Agreement and Order no. 8113 issued to Simkins Industries.

(U) SIP narrative materials, dated March 1997, submitted with Connecticut Trading Agreement and Order no. 8135 issued to Bridgeport Hydraulic Company.

(V) SIP narrative materials, dated March 1997, submitted with Connecticut Trading Agreement and Order no. 8141 issued to the Town of Wallingford Department of Public Utilities.

(W) SIP narrative materials, dated April 1997, submitted with Connecticut Trading Agreement and Order no. 8123 issued to the Algonquin Gas Transmission Company.

(X) SIP narrative materials, dated April 1997, submitted with Connecticut Trading Agreement and Order no. 8116 issued to the Connecticut Resource Recovery Authority.

(73) Revisions to the State Implementation Plan submitted by the Connecticut Department of Environmental Protection on June 3, 1996.

(i) Incorporation by reference.

(A) Letter from the Connecticut Department of Environmental Protection dated June 3, 1996, submitting a revision to the Connecticut State Implementation Plan.

(B) State Order No. 8036, dated May 6, 1996, for Risdon Corporation, effective on that date. The State order define and impose alternative RACT on certain VOC emissions at Risdon Corporation in Danbury, Connecticut.

(74) A revision to the Connecticut SIP regarding ozone monitoring. Connecticut will modify its SLAMS and its NAMS monitoring systems to include a PAMS network design and establish monitoring sites. Connecticut's SIP revision satisfies 40 CFR 58.20(f) PAMS requirements.

(i) Incorporation by reference.

(A) PAMS SIP Commitment Narrative, which incorporates PAMS into the ambient air quality monitoring network of State or Local Air Monitoring Stations (SLAMS) and National Air Monitoring Stations (NAMS).

(ii) Additional material.

(A) Letter from the Connecticut Department of Environmental Protection dated March 2, 1995 submitting a revision to the Connecticut State Implementation Plan.

(75) Revisions to the State Implementation Plan submitted by the Connecticut Department of Environmental Protection on January 5, 1994.

(i) Incorporation by reference.

(A) Letter from the Connecticut Department of Environmental Protection dated January 5, 1994 submitting a revision to the Connecticut State Implementation Plan.

(B) Regulations sections 22a–174–20(s), "Miscellaneous Metal Parts and Products," sections 22a–174–20(v), "Graphic Arts Rotogravures and Flexography," sections 22a–174–20(ee), "Reasonably Available Control Technology for Large Sources," adopted and effective on November 18, 1993, which establish reasonably available control technology requirements for major stationary sources of volatile organic compounds.

(76) Revision to the State Implementation Plan submitted by the Connecticut Department of Environmental Protection on January 5, 1994.

(i) Incorporation by reference.

(A) Letter from the Connecticut Department of Environmental Protection dated January 5, 1994 submitting a revision to the Connecticut State Implementation Plan.

(B) Regulation section 22a–174–32, "Reasonably Available Control Technology for Volatile Organic Compounds," adopted and effective on November 18, 1993, which establishes reasonably available control technology requirements for major stationary sources of volatile organic compounds.

(ii) Additional materials.

(A) Letter from Connecticut dated June 27, 1994 clarifying language in section 22a–174–32(A).

(77) Revisions to the State Implementation Plan submitted by the Connecticut Department of Environmental Protection on December 30, 1994, and May 8, 1998. This revision is for the purpose of satisfying the rate-of-progress requirement of section 182(b) and the contingency measure requirements of sections 172(c)(9) and 182(c)(9) of the Clean Air Act, for the Greater Hartford serious ozone nonattainment area, and the Connecticut portion of the NY–NJ–CT severe ozone nonattainment area.

(i) Incorporation by reference.

(A) Letter from the Connecticut Department of Environmental Protection dated December 30, 1994, submitting a revision to the Connecticut State Implementation Plan.

(B) Letter from the Connecticut Department of Environmental Protection dated May 8, 1998, submitting a revision to the Connecticut State Implementation Plan.

(78) Revision to the State Implementation Plan submitted by the Connecticut Department of Environmental Protection on June 24, 1998.

(i) Incorporation by reference.

(A) State of Connecticut Regulation of Department of Environmental Protection Section 22a–174–27, Emission Standards for Periodic Motor Vehicle Inspection and Maintenance as revised on March 26, 1998.

(B) State of Connecticut Regulation of Department of Motor Vehicles Concerning Periodic Motor Vehicle Emissions Inspection and Maintenance Section 14–164c as revised on April 7, 1998.

(ii) Additional Materials.

(A) Letter from the Connecticut Department of Environmental Protection dated June 24, 1998 submitting a revision to the Connecticut State Implementation Plan.

(B) Letter from Connecticut Department of Environmental Protection dated November 13, 1998, submitting a revision to the Connecticut State Implementation Plan.

(79) Revisions to the State Implementation Plan submitted by the Connecticut Department of Environmental Protection on February 7, 1996 and February 18, 1999.

(i) Incorporation by reference.

(A) Connecticut regulation section 22a–174–36, entitled "Low Emission Vehicles" as dated and effective by determination of the Secretary of State on December 23, 1994.

(B) Connecticut regulation section 22a–174–36(g), entitled "Alternative Means of Compliance via the National Low Emission Vehicle (LEV) Program" as dated and effective by determination of the Secretary of State on January 29, 1999.

(ii) Additional material.

(A) Letter from the Connecticut Department of Environmental Protection dated February 7, 1996 submitting a revision to the Connecticut State Implementation Plan for the Low Emission Vehicle program.

(B) Letter from the Connecticut Department of Environmental Protection

dated February 18, 1999 submitting a revision to the Connecticut State Implementation Plan for the National Low Emission Vehicle program to be a compliance option under the State's Low Emission Vehicle Program.

(80) Revision to the State Implementation Plan submitted by the Connecticut Department of Environmental Protection on March 26, 1999.

(i) Incorporation by reference.

(A) Letter from the Connecticut Department of Environmental Protection dated March 26, 1999, submitting a revision to the Connecticut State Implementation Plan.

(B) Regulation section 22a–174–22a, "The Nitrogen Oxides (NO_X) Budget Program" adopted on December 15, 1998, and effective on March 3, 1999.

(ii) Additional materials.

(A) Nonregulatory portions of the submittals.

(81) Revisions to the State Implementation Plan submitted by the Connecticut Department of Environmental Protection on May 12, 1994.

(i) Incorporation by reference.

(A) "Clean Fuel Fleet Substitute Plan," prepared by the Connecticut Department of Environmental Protection, dated May 12, 1994.

(ii) Additional materials.

(A) Letter from the Connecticut Department of Environmental Protection dated May 12, 1994 submitting a revision to the Connecticut State Implementation Plan.

(82) Revisions to the State Implementation Plan submitted by the Connecticut Department of Environmental Protection on July 11, 1997, September 12, 1997, and December 8, 1997.

(i) Incorporation by reference.

(A) Letters from the Connecticut Department of Environmental Protection dated July 11, 1997, September 12, 1997, and December 8, 1997, submitting revisions to the Connecticut State Implementation Plan.

(B) Trading Agreement and Order Number 8137 issued to AlliedSignal, Inc., and U.S. Army Tank-Automotive and Armaments Command in Stratford, effective on November 19, 1996.

(C) Trading Agreement and Order Number 8138 issued to Connecticut Natural Gas Corporation in Rocky Hill, effective on November 19, 1996.

(D) Trading Agreement and Order Number 8114 issued to Cytec Industries, Inc., in Wallingford, effective on December 20, 1996.

(E) Modification to Trading Agreement and Order Number 8138 issued to Connecticut Natural Gas Corporation effective June 25, 1997.

(F) Modification to Trading Agreement and Order Number 8137 issued to AlliedSignal, Inc., and U.S. Army Tank-Automotive and Armaments Command in Stratford, effective July 8, 1997.

(G) Trading Agreement and Order Number 8094 issued to Ogden Martin Systems of Bristol, Inc., in Bristol, effective on July 23, 1997.

(ii) Additional Materials.

(A) Nonregulatory portions of the submittals.

(B) Policy materials concerning the use of emission credits from New Jersey at Connecticut sources.

(83) Revisions to the State Implementation Plan submitted by the Connecticut Department of Environmental Protection on October 7, 1999 to discontinue the oxygenated gasoline program in the Connecticut portion of the New York—N. New Jersey—Long Island Area.

(i) Incorporation by reference.

(A) CTDEP; "Abatement of Air Pollution: Oxygenated Gasoline,"

State Regulation 22a–174–28.

(ii) Additional materials.

(A) Letter from the Connecticut Department of Environmental Protection dated October 7, 1999 submitting a revision to the Connecticut State Implementation Plan.

(84) Revisions to the State Implementation Plan submitted by the Connecticut Department of Environmental Protection on April 15, 1997, April 20, 1998, and September 2, 1999.

(i) Incorporation by reference.

(A) Section 22a–174–1(97) of the Regulation of the Connecticut State Agencies, definition of the term "Volatile organic compound" or "VOC," effective in the State of Connecticut on December 22, 1997.

(B) Section 22a–174–20(b) of the Regulation of the Connecticut State Agencies, entitled "Loading of gasoline and

other volatile organic compounds," effective in the State of Connecticut on April 1, 1998.

(C) Section 22a–174–20(l) of the Regulation of the Connecticut State Agencies, entitled "Metal cleaning," effective in the State of Connecticut on August 23, 1996.

(D) Section 22a–174–20(s) of the Regulation of the Connecticut State Agencies, "Miscellaneous metal parts and products," effective in the State of Connecticut on March 1, 1995.

(E) Section 22a–174–32 of the Regulation of the Connecticut State Agencies, entitled "Reasonably Available Control Technology (RACT) for volatile organic compounds," effective in the State of Connecticut on August 27, 1999.

(ii) Additional materials.

(A) Letters from the Connecticut Department of Environmental Protection dated April 15, 1997, April 20, 1998, and September 2, 1999 submitting revisions to the Connecticut State Implementation Plan.

(85) [Reserved]

(86) Revisions to the State Implementation Plan submitted by the Connecticut Department of Environmental Protection on September 30, 1999.

(i) Incorporation by reference.

(A) Regulations of Connecticut State Agencies, Section 22a–174–22b, State of Connecticut Regulation of Department of Environmental Protection Concerning The Post-2002 Nitrogen Oxides (NO_X) Budget Program, which became effective on September 29, 1999.

(ii) Additional materials.

(A) Letter from Connecticut Department of Environmental Protection dated September 30, 1999 submitting Regulations of Connecticut State Agencies, Section 22a–174–22b and associated administrative materials as a revision to the Connecticut State Implementation Plan.

(B) The SIP narrative "Connecticut State Implementation Plan Revision to Implement the NO_X SIP Call," dated September 30, 1999.

(C) Letter from Connecticut Department of Environmental Protection dated August 1, 2002.

(D) The SIP narrative "Connecticut State Implementation Plan Revision to Revise the State's NO_X Emissions Budget," dated July 22, 2002.

(87) [Reserved]

(88) Revisions to the State Implementation Plan submitted by the Connecticut Department of Environmental Protection on May 19, 2000.

(i) Incorporation by reference.

(A) Connecticut Trading Agreement and Order No. 8177 issued to Wisvest Bridgeport Harbor's Unit No. 3 in Bridgeport on May 31, 2000.

(B) Connecticut Trading Agreement and Order No. 8187 issued to Wisvest Bridgeport Harbor's Unit No. 2 on January 12, 2000.

(C) Connecticut Trading Agreement and Order No. 8094, Modification No. 2, issued to Ogden Martin Systems of Bristol, Inc. on May 22, 2000.

(D) Connecticut Trading Agreement and Order No. 8095, Modification No. 2, issued to American Ref-Fuel Company of Southeastern Connecticut in Preston on May 22, 2000.

(E) Connecticut Trading Agreement and Order No. 8100, Modification No. 2, issued to Bridgeport Resco Company, Limited Partnership in Bridgeport on May 22, 2000.

(F) Connecticut Trading Agreement and Order No. 8116, Modification No. 2, issued to the Connecticut Resources Recovery Authority in Hartford on May 22, 2000.

(G) Connecticut Trading Agreement and Order No. 8178 issued to Wisvest's New Haven Harbor's auxiliary boiler in New Haven on May 22, 2000.

(H) Connecticut Trading Agreement and Order No. 8179 issued to Wisvest's Bridgeport Harbor's Unit No. 4 on May 22, 2000.

(I) Connecticut Trading Agreement and Order No. 8176, issued to Wisvest's New Haven Harbor Station's Unit No. 1 in New Haven on May 31, 2000.

(ii) Additional materials.

(A) Letter from the Connecticut Department of Environmental Protection dated May 19, 2000, submitting a revision to the Connecticut State Implementation Plan.

(B) SIP narrative materials, dated December 1999, submitted with Connecticut Trading Agreement and Order Nos. 8176, 8177, 8178, 8179, and 8187.

(89) Revisions to the State Implementation Plan submitted by the Connecticut Department of Environmental Protection on November 16, 1999.

(i) Incorporation by reference.

(A) Subsection (b) of Section 14–164c-11a of the Regulations of Connecticut State Agencies Concerning Emissions Repairs Expenditure Requirement to Receive Waiver, adopted and effective June 24, 1999.

(ii) Additional materials.

(A) Letter from Connecticut Department of Environmental Protection dated November 19, 1999 submitting a revision to the Connecticut State Implementation Plan.

(B) Narrative portion of the Revision to State Implementation Plan for Enhanced Motor Vehicle Inspection and Maintenance Program, dated October 7, 1999.

(90) Revisions to the State Implementation Plan submitted by the Connecticut Department of Environmental Protection on October 15, 2001, to incorporate the nitrogen oxide limits and related regulatory provisions of regulation 22a–174–38, Municipal Waste Combustors.

(i) Incorporation by reference.

(A) The nitrogen oxide emission limits and related regulatory provisions of State of Connecticut Regulation of Department of Environmental Protection Section 22a–174–38, Municipal Waste Combustors effective October 26, 2000, included in sections 22a–174–38 (a), (b), (c), (d), (i), (j), (k), (l), and (m).

(ii) Additional material.

(A) Letter from the Connecticut Department of Environmental Protection dated October 15, 2001, submitting a revision to the Connecticut State Implementation Plan.

(91) Revisions to the State Implementation Plan submitted by the Connecticut Department of Environmental Protection on June 14, 2002.

(i) Incorporation by reference.

(A) Connecticut's amendments to Section 22a–174–1, *Definitions* except for the following sections: (4), (18), (20), (29), (44), (45), (60), (111), (112) and, (117). These regulations are effective in the state of Connecticut on March 15, 2002.

(B) Connecticut's new Section 22a–174–2a, *Procedural Requirements for New Source Review and Title V Permitting* except for the following sections: (a)(1) through (6); (b)(1) through (4); introduction to (b)(5); (b)(5)(D), (F) and, the last sentence of (G); (b)(9); (c)(2); clause after first comma " * * * or order pursuant to section 22a–174–33(d) of regulations of Connecticut State Agency * * * " in the introduction to (c)(6); (c)(6)(B) and (C); clause after first comma " * * * or order pursuant to section 22a–174–33(d) of Regulations of Connecticut State Agencies * * * " in (c)(9); reference to "Title V" in title of (d); (d)(4)(A) through (D); (d)(7)(A) through (D); (d)(8)(A) and (B); reference to "Title V" in title of (e); (e)(2)(A) and (B); (e)(3)(D); (e)(5)(A) through (F); reference to "Title V permit" in (e)(6); reference to "22a–174–33" in first clause of introduction to (f)(2); (f)(2)(F); (f)(5); (f)(6); (g)(1) and (2); (h)(1) through (3) and; (i)(1) through (3). These regulations are effective in the state of Connecticut on March 15, 2002.

(C) Connecticut's new Section 22a–174–3a, *Permit to Construct and Operate Stationary Sources* except for the following sections: (a)(1)(C); (c)(1)(H); (d)(3)(J) and (M); references to "Dioxin," "PCDDs" and, "PCDFs" in Table 3a(i)–1 of (i)(1) and; (m)(1) through (8). These regulations are effective in the state of Connecticut on March 15, 2002.

(ii) Additional materials.

(A) Letter from the Connecticut Department of Environmental Protection dated June 14, 2002 submitting a revision to the Connecticut State Implementation Plan.

[37 FR 10855, May 31, 1972]

EDITORIAL NOTE: For FEDERAL REGISTER citations affecting § 52.370, see the List of CFR Sections Affected, which appears in the Finding Aids section of the printed volume and on GPO Access.

§ 52.371 Classification of regions.

The Connecticut plan was evaluated on the basis of the following classifications:

Air quality control region	Pollutant				
	Particulate matter	Sulfur oxides	Nitrogen dioxide	Carbon monoxide	Ozone
New Jersey–New York–Connecticut Interstate	I	I	I	I	I
Hartford–New Haven–Springfield Interstate	I	I	III	I	I
Northwestern Intrastate	III	III	III	III	III
Eastern Intrastate	II	III	III	III	III

[37 FR 10855, May 31, 1972, as amended at 39 FR 16346, May 8, 1974; 45 FR 84787, Dec. 23, 1980]

§ 52.372 Extensions.

(a) [Reserved]

(b) The Administrator hereby extends until December 31, 1996, the attainment date for particulate matter for the New Haven PM10 nonattainment area, as requested by the State of Connecticut on March 22, 1996 and based on monitored air quality data for the national ambient air quality standard for PM10 during the years 1993–95.

[61 FR 56900, Nov. 5, 1996, as amended at 62 FR 14331, Mar. 26, 1997; 64 FR 67192, Dec. 1, 1999]

§ 52.373 Approval status.

(a) The Administrator approves the general procedures of the state's sulfur control regulations (19–508–19) and accompanying narrative submitted on October 23, 1981, and November 4, 1981 and identified under § 52.370(c)(18), provided that any individual source approvals granted by the state under the Air Pollution Control/Energy Trade Option and solid fuel burning permitting system are submitted to EPA as SIP revisions.

(b) The Administrator approves the total suspended particulate regulation for foundry sand processes as submitted and identified under paragraph (c)(22) of this section. This includes only the requirement to remove ninety percent of the particulate matter and not the requirement to emit not more than 0.75 pounds of particulate per ton of material cast, a provision which may be found in state regulation 19–508–18(f)(3).

[61 FR 38576, July 25, 1996]

§ 52.374 Attainment dates for national standards.

The following table presents the latest dates by which the national standards are to be attained. The dates reflect the information presented in Connecticut's plan.

Air quality control region	Pollutant					
	SO_2		PM_{10}	NO_2	CO	O_3
	Primary	Secondary				
AQCR 41: Eastern Connecticut Intrastate (See 40 CFR 81.183)	(a)	(b)	(a)	(a)	(a)	(d)
AQCR 42: Hartford-New Haven-Springfield Interstate Area (See 40 CFR 81.26)						
All portions except City of New Haven	(a)	(b)	(a)	(a)	(a)	(d)
City of New Haven	(a)	(b)	(c)	(a)	(a)	(d)
AQCR 43: New Jersey-New York-Connecticut Interstate Area (See 40 CFR 81.13)	(a)	(a)	(a)	(a)	(a)	(d)
AQCR 44: Northwestern Connecticut Intrastate (See 40 CFR 81.184)	(a)	(b)	(a)	(a)	(a)	(d)

a. Air quality levels presently below primary standards or area is unclassifiable.
b. Air quality levels presently below secondary standards or area is unclassifiable.
c. December 31, 1996 (two 1-year extensions granted).
d. November 15, 2007.

[45 FR 84787, Dec. 23, 1980, as amended at 61 FR 38576, July 25, 1996; 62 FR 14331, Mar. 26, 1997; 64 FR 12013, Mar. 10, 1999; 66 FR 663, Jan. 3, 2001]

§ 52.375 Certification of no sources.

The State of Connecticut has certified to the satisfaction of EPA that no sources are located in the state which are covered by the following Control Technique Guidelines:

(a) Large Petroleum Dry Cleaners.

(b) Natural Gas/Gasoline Processing Plants.

(c) Air Oxidation Processes/SOCMI.

(d) Manufacturers of High-density Polyethylene and Polypropylene Resins.

(e) Synthetic organic chemical manufacturing industry (SOCMI) distillation.

(f) Synthetic organic chemical manufacturing industry (SOCMI) reactor vessels.

[50 FR 37178, Sept. 12, 1985, as amended at 53 FR 17936, May 19, 1988; 65 FR 62623, Oct. 19, 2000]

§ 52.376 Control strategy: Carbon monoxide.

(a) Approval—On January 12, 1993, the Connecticut Department of Environmental Protection submitted a revision to the carbon monoxide State Implementation Plan for the 1990 base year emission inventory. The inventory was submitted by the State of Connecticut to satisfy Federal requirements under sections 172(c)(3) and 187(a)(1) of the Clean Air Act as amended in 1990, as a revision to the carbon monoxide State Implementation Plan for the Hartford/New Britain/Middletown carbon monoxide nonattainment area, the New Haven/Meriden/Waterbury carbon monoxide nonattainment area, and the Connecticut Portion of the New York-N. New Jersey-Long Island carbon monoxide nonattainment area.

(b) Approval—On September 30, 1994, the Connecticut Department of Environmental Protection submitted a request to redesignate the Hartford/New Britain/Middletown Area carbon monoxide nonattainment area to attainment for carbon monoxide. As part of the redesignation request, the State submitted a maintenance plan as required by 175A of the Clean Air Act, as amended in 1990. Elements of the section 175A maintenance plan include a base year (1993 attainment year) emission inventory for carbon monoxide, a demonstration of maintenance of the carbon monoxide NAAQS with projected emission inventories to the year 2005 for carbon monoxide, a plan to verify continued attainment, a contingency plan, and an obligation to submit a subsequent maintenance plan revision in 8 years as required by the Clean Air Act. If the area records a violation of the carbon monoxide NAAQS (which must be confirmed by the State), Connecticut will implement one or more appropriate contingency measure(s) which are contained in the contingency plan. The menu of contingency measure includes enhanced motor vehicle inspection and maintenance program and implementation of the oxygenated fuels program. The redesignation request and maintenance plan meet the redesignation requirements in sections 107(d)(3)(E) and 175A of the Act as amended in 1990, respectively.

(c) Approval—On January 12, 1993 and April 7, 1994, the Connecticut Department of Environmental Protection submitted revisions to the carbon monoxide State Implementation Plan for VMT forecasts, contingency measures, and attainment demonstration for CO. These VMT forecasts, contingency measures, and attainment demonstration were submitted by Connecticut to satisfy Federal requirements under sections 187(a)(2)(A), 187(a)(3) and 187(a)(7) of the Clean Air Act, as amended in 1990, as revisions to the carbon monoxide State Implementation Plan.

(d) Approval—On January 17, 1997, the Connecticut Department of Environmental Protection submitted a request to redesignate the New Haven/Meriden/Waterbury carbon monoxide nonattainment area to attainment for carbon monoxide. As part of the redesignation request, the State submitted a maintenance plan as required by 175A of the Clean Air Act, as amended in 1990. Elements of the section 175A maintenance plan include a base year

emission inventory for carbon monoxide, a demonstration of maintenance of the carbon monoxide NAAQS with projected emission inventories to the year 2008 for carbon monoxide, a plan to verify continued attainment, a contingency plan, and an obligation to submit a subsequent maintenance plan revision in 8 years as required by the Clean Air Act. If the area records a violation of the carbon monoxide NAAQS (which must be confirmed by the State), Connecticut will implement one or more appropriate contingency measure(s) which are contained in the contingency plan. The menu of contingency measure includes reformulated gasoline and the enhanced motor vehicle inspection and maintenance program. The redesignation request establishes a motor vehicle emissions budget of 229 tons per day for carbon monoxide to be used in determining transportation conformity for the New Haven/Meriden/Waterbury area. The redesignation request and maintenance plan meet the redesignation requirements in sections 107(d)(3)(E) and 175A of the Act as amended in 1990, respectively.

(e) Approval—In December, 1996, the Connecticut Department of Environmental Protection submitted a revision to the carbon monoxide State Implementation Plan for the 1993 periodic emission inventory. The inventory was submitted by the State of Connecticut to satisfy Federal requirements under section 187(a)(5) of the Clean Air Act as amended in 1990, as a revision to the carbon monoxide State Implementation Plan.

(f) Approval—On May 29, 1998, the Connecticut Department of Environmental Protection submitted a request to redesignate the Connecticut portion of the New York-N. New Jersey-Long Island carbon monoxide nonattainment area to attainment for carbon monoxide. As part of the redesignation request, the State submitted a maintenance plan as required by 175A of the Clean Air Act, as amended in 1990. Elements of the section 175A maintenance plan include a periodic emission inventory for carbon monoxide, a demonstration of maintenance of the carbon monoxide NAAQS with projected emission inventories to the year 2010 for carbon monoxide, a plan to verify continued attainment, a contingency plan, and an obligation to submit a subsequent maintenance plan revision in 8 years as required by the Clean Air Act. If the area records an exceedance of the carbon monoxide NAAQS (which must be confirmed by the State), Connecticut will implement one or more appropriate contingency measure(s) which are contained in the contingency plan. The menu of contingency measure includes investigating local traffic conditions, the enhanced motor vehicle inspection and maintenance program, and the low emissions vehicles program (LEV). The redesignation request establishes a motor vehicle emissions budget of 205 tons per day for carbon monoxide to be used in determining transportation conformity in the Connecticut Portion of the New York-N. New Jersey-Long Island Area. The redesignation request and maintenance plan meet the redesignation requirements in sections 107(d)(3)(E) and 175A of the Act as amended in 1990, respectively.

(g) Approval—On October 7, 1999, the Connecticut Department of Environmental Protection submitted a revision to the carbon monoxide State Implementation Plan that removes the oxygenated fuel requirement for the Connecticut portion of the New York—N. New Jersey—Long Island area and converts the program to a contingency measure. If a violation of the carbon monoxide ambient air quality standard were to occur, the State would be required to reimplement the program.

[60 FR 55320, Oct. 31, 1995, as amended at 61 FR 38577, July 25, 1996; 63 FR 53286, Oct. 5, 1998; 64 FR 12014, Mar. 10, 1999; 64 FR 67192, Dec. 1, 1999]

§ 52.377 Control strategy: Ozone.

(a) Revisions to the State Implementation Plan submitted by the Connecticut Department of Environmental Protection on December 30, 1997 and January 7, 1998. These revisions are for the purpose of satisfying the rate of progress requirement of section 182(c)(2) through 1999, and the contingency measure requirements of sections 172(c)(9) and 182(c)(9) of the Clean Air Act, for the Greater Hartford serious ozone nonattainment area, and the

Connecticut portion of the NY–NJ–CT severe ozone nonattainment area.

(b) Approval—Revisions to the State Implementation Plan submitted by the Connecticut Department of Environmental Protection on September 16, 1998, February 8, 2000 and June 17, 2003. The revisions are for the purpose of satisfying the attainment demonstration requirements of section 182(c)(2)(A) of the Clean Air Act for the Greater Connecticut serious ozone nonattainment area. The revision establishes an attainment date of November 15, 2007 for the Greater Connecticut serious ozone nonattainment area. Connecticut commits to conduct a mid-course review to assess modeling and monitoring progress achieved toward the goal of attainment by 2007, and submit the results to EPA by December 31, 2004. The June 17, 2003 revision establishes MOBILE6-based motor vehicle emissions budgets for 2007 of 51.9 tons per day of volatile organic compounds (VOC) and 98.4 tons per day of nitrogen oxides (NO_X) to be used in transportation conformity in the Greater Connecticut serious ozone nonattainment area.

(c) Approval—Revisions to the State Implementation Plan submitted by the Connecticut Department of Environmental Protection on October 15, 2001 and June 17, 2003. These revisions are for the purpose of satisfying the rate of progress requirement of section 182 (c)(2)(B) through 2007, and the contingency measure requirements of section 182 (c)(9) of the Clean Air Act, for the Connecticut portion of the NY–NJ–CT severe ozone nonattainment area. The October 15, 2001 revision establishes motor vehicle emissions budgets for 2002 of 15.20 tons per day of VOC and 38.39 tons per day of NO_X to be used in transportation conformity in the Connecticut portion of the NY–NJ–CT severe ozone nonattainment area. The June 17, 2003 revision establishes motor vehicle emissions budgets for 2005 of 19.5 tons per day of VOC and 36.8 tons per day of NO_X to be used in transportation conformity in the Connecticut portion of the NY–NJ–CT severe ozone nonattainment area.

(d) Approval—Revisions to the State Implementation Plan submitted by the Connecticut Department of Environmental Protection on September 16, 1998, February 8, 2000, October 15, 2001 and June 17, 2003. The revisions are for the purpose of satisfying the attainment demonstration requirements of section 182(c)(2)(A) of the Clean Air Act for the Connecticut portion of the NY–NJ–CT severe ozone nonattainment area. The June 17, 2003 revision establishes MOBILE6-based motor vehicle emissions budgets for 2007 of 16.4 tons per day of VOC and 29.7 tons per day of NO_X to be used in transportation conformity in the Connecticut portion of the NY–NJ–CT severe ozone nonattainment area. Connecticut commits to adopt and submit by October 31, 2001, additional necessary regional control measures to offset the emission reduction shortfall in order to attain the one-hour ozone standard by November 2007. Connecticut commits to adopt and submit by October 31, 2001, additional necessary intrastate control measures to offset the emission reduction shortfall in order to attain the one-hour ozone standard by November 2007. Connecticut commits to adopt and submit additional restrictions on VOC emissions from mobile equipment and repair operations; and requirements to reduce VOC emissions from certain consumer products. Connecticut also commits to conduct a mid-course review to assess modeling and monitoring progress achieved toward the goal of attainment by 2007, and submit the results to EPA by December 31, 2004.

[65 FR 62626, Oct. 19, 2000, as amended at 66 FR 663, Jan. 3, 2001; 66 FR 63938, Dec. 11, 2001; 69 FR 5288, Feb. 4, 2004]

§§ 52.378–52.379 [Reserved]

§ 52.380 Rules and regulations.

(a) All facilities owned, operated or under contract with the Connecticut Transportation Authority shall comply in all respects with Connecticut Regulations for the Abatement of Air Pollution sections 19–508–1 through 19–508–25 inclusive, as approved by the Administrator.

(b) For the purposes of paragraph (a) of this section the word "Administrator" shall be substituted for the word "Commissioner" wherever that

word appears in Connecticut Regulations for the Abatement of Air Pollution sections 19–508–1 through 19–508–25 inclusive, as approved by the Administrator.

(c) The June 27 and December 28, 1979, February 1, May 1, September 8 and November 12, 1980, revisions are approved as satisfying Part D requirements under the following conditions:

(1) [Reserved]

(2) [Reserved]

(d) Non-Part D-No Action: EPA is neither approving nor disapproving the following elements of the revisions:

(1)–(2) [Reserved]

(3) The program to review new and modified major stationary sources in attainment areas (prevention of significant deterioration).

(4) Permit fees

(5) Stack height regulations

(6) Interstate pollution requirements

(7) Monitoring requirements

(8) Conflict of interest provisions.

(9) Use of 1 percent sulfur content fuel by the following residual oil burning sources, identified under § 52.370, paragraph (c)(18).

(i) Northeast Utilities, HELCO Power Station in Middletown,

(10) Emergency Fuel Variance provisions of Regulation 19–508–19 (a)(2)(ii) identified under § 52.370 paragraph (c)(18).

(e) *Disapprovals.* (1) Regulation 19–508–19(a)(9) concerning coal use at educational and historical exhibits and demonstrations, identified under § 52.370, (c)(18).

(2) Regulation 19–508–19, subsection (a)(4)(iii)(C) and (a)(4)(iii)(E) concerning fuel merchants, identified under § 52.370, paragraph (c)(18).

[40 FR 23280, May 29, 1975, as amended at 45 FR 84787, Dec, 23, 1980; 46 FR 34801, July 6, 1981; 46 FR 56615, Nov. 18, 1981; 46 FR 62062, Dec. 22, 1981; 47 FR 763, Jan. 7, 1982; 47 FR 36823, Aug. 24, 1982; 47 FR 41959, Sept. 23, 1982; 47 FR 49646, Nov. 2, 1982; 47 FR 51129, Nov. 12, 1982; 48 FR 5724, Feb. 8, 1983; 50 FR 50907, Dec. 13, 1985; 65 FR 62623, Oct. 19, 2000]

§ 52.381 Requirements for state implementation plan revisions relating to new motor vehicles.

Connecticut must comply with the requirements of § 51.120.

[60 FR 4737, Jan. 24, 1995]

§ 52.382 Significant deterioration of air quality.

(a) The requirements of sections 160 through 165 of the Clean Air Act are not met, since the plan does not include approvable provisions for the NO_2 increments under the prevention of significant deterioration program.

(b) The increments for nitrogen dioxide promulgated on October 17, 1988 (53 FR 40671), and related requirements in 40 CFR 52.21 except paragraph (a)(1), are hereby incorporated and made part of the applicable implementation plan for the State of Connecticut.

[58 FR 10964, Feb. 23, 1993, as amended at 68 FR 11322, Mar. 10, 2003; 68 FR 74488, Dec. 24, 2003]

§ 52.383 Stack height review.

The State of Connecticut has declared to the satisfaction of EPA that no existing emission limitations have been affected by stack height credits greater than good engineering practice or any other prohibited dispersion techniques as defined on EPA's stack height regulations as revised on July 8, 1985. Such declarations were submitted to EPA on February 21, 1986, and May 27, 1986.

[52 FR 49407, Dec. 31, 1987]

§ 52.384 Emission inventories.

(a) The Governor's designee for the State of Connecticut submitted the 1990 base year emission inventories for the Connecticut portion of the New York-New Jersey-Connecticut severe ozone nonattainment area and the Greater Hartford serious ozone nonattainment area on January 13, 1994 as revisions to the State's SIP. Revisions to the inventories were submitted on February 3, 1994, February 16, 1995, and December 30, 1997. The 1990 base year emission inventory requirement of section 182(a)(1) of the Clean Air Act, as amended in 1990, has been satisfied for these areas.

(b) The inventories are for the ozone precursors which are volatile organic compounds, nitrogen oxides, and carbon monoxide. The inventories covers point, area, non-road mobile, on-road mobile, and biogenic sources.

(c) Taken together, the Connecticut portion of the New York-New Jersey-

Connecticut severe nonattainment area and the Hartford serious nonattainment area encompass the entire geographic area of the State.

[62 FR 55340, Oct. 24, 1997, as amended at 65 FR 62626, Oct. 19, 2000]

§ 52.385 EPA-approved Connecticut regulations.

The following table identifies the State regulations which have been submitted to and approved by EPA as revisions to the Connecticut State Implementation Plan. This table is for informational purposes only and does not have any independent regulatory effect. To determine regulatory requirements for a specific situation, consult the plan identified in § 52.370. To the extent that this table conflicts with § 52.370, § 52.370 governs.

TABLE 52.385—EPA-APPROVED REGULATIONS

Connecticut State citation	Title/subject	Dates		Federal Register citation	Section 52.370	Comments/description
		Date adopted by State	Date approved by EPA			
19–508	Connecticut Air Implementation Plan.	3/3/72	5/31/72	37 FR 10842	(c) 1&2	State of CT Air Implementation Plan.
		8/10/72	5/14/73	38 FR 12696	(c) 3	Correction to submission dates for supplemental information.
		4/9/74	6/2/75	40 FR 23746	(c) 5	Identification of Air Quality Maintenance Areas.
		8/10/76	11/29/77	42 FR 60753	(c) 7	Adds carbon monoxide/oxidant control strategy and regulations.
		6/30/77	9/29/78	43 FR 44840	(c) 8	Describes air quality surveillance program.
22a–171	Small Business Assistance.	1/12/93	5/19/94	59 FR 26123	(c) 65	Established small business compliance and technical assistance program.
22a–174–1	Definitions	03/15/02	02/27/03	68 FR 9011	Adopting definitions applicable to PSD/NSR program..	
22a–174–2	Registration requirements for existing stationary sources of air pollutants.	4/04/72	5/31/72	37 FR 23085	(b).	
		8/31/79	12/23/80	45 FR 84769	(c) 11	In tandem with changes to Regulation 3, sources existing prior to 1972 must register.
22a–174–2a	Procedural Requirements for New Source Review and Title V Permitting.	03/15/02	02/27/03	68 FR 9011	Provisions applicable to PSD/NSR in consolidated permit procedural requirements..	
22a–174–3	Permits for construction and operation of stationary sources.	4/04/72	5/31/72	37 FR 23085	(b)	Conditional approval of NSR program.

TABLE 52.385—EPA-APPROVED REGULATIONS—Continued

Connecticut State citation	Title/subject	Dates		Federal Register citation	Section 52.370	Comments/description
		Date adopted by State	Date approved by EPA			
		8/30/79	12/23/80	45 FR 84769	(c)11	EPA conditionally approved changes to meet federal New Source Review (NSR) requirements. CT did not submit Prevention of Significant Determination program.
		8/31/79	1/07/82	47 FR 762	(c) 20	Final approval of NSR Rules removing conditions of 12/23/80.
		10/10/80	1/07/82	47 FR 762	(c) 20	Allows conditional exemption of resource recovery facilities from offset transactions.
		10/10/80	1/07/82	47 FR 762	(c) 20	Replaces the word "actual" with word "allowable".
		12/27/88	2/23/93	58 FR 10957	(c) 56	Changes to NSR and PSD requirements.
22a–174–3a	Permit to Construct and Operate Stationary Sources.	03/15/02	02/27/03	68 FR 9011	PSD/NSR program requirements as revised by the CAAA..	
22a–174–4	Source monitoring, record keeping, reporting and authorization of inspection of air pollution sources.	4/04/72	5/31/72	37 FR 23085	(b).	
		10/31/77	12/23/80	45 FR 84769	(c) 11	Clarifies record keeping and reporting requirements and rescinds smoke monitoring requirements for small sources.
		12/15/80	8/24/82	47 FR 36822	(c) 20	Rescinded requirements for smoke monitors on sources less than 250 mmBtu.
		12/27/88	2/23/93	58 FR 10957	(c) 56	Changes to opacity continuous emission monitoring (CEM) requirements.
22a–174–5	Methods for sampling, emission testing, and reporting.	4/04/72	5/31/72	37 FR 23085	(b).	

TABLE 52.385—EPA-APPROVED REGULATIONS—Continued

Connecticut State citation	Title/subject	Dates		Federal Register citation	Section 52.370	Comments/description
		Date adopted by State	Date approved by EPA			
		10/05/77	12/23/80	45 FR 84769	(c) 11	Tied State testing method requirement to federal requirements, clarified requirements for stack testing, and eliminated record keeping and reporting requirements.
		12/19/80	8/28/81	46 FR 43418	(c) 16	Revisions to source monitoring and stack testing requirements for SO2.
22a–174–6	Air Pollution Emergency Episode Procedures.	4/04/72	5/31/72	37 FR 23085	(b).	
		8/31/79	12/23/80	45 FR 84769	(c) 11	Allows DEP to separately limit mobile and stationary sources depending upon the cause of the episode.
22a–174–7	Malfunction of Control Equipment; Reporting.	4/04/72	5/31/72	37 FR 23085	(b).	
22a–174–8	Compliance Plans and Schedules.	4/04/72	5/31/72	37 FR 23085	(b).	
22a–174–9	Prohibition of air pollution.	4/04/72	5/31/72	37 FR 23085	(b).	
		8/31/79	12/23/80	45 FR 84769	(c) 11	Non-substantive numbering change.
		8/31/79	8/12/83	48 FR 36579	(c) 11.	Full authority delegated for NSPS and NESHAPS.
			12/6/91	56 FR 63875		Delegation of new subparts.
22a–174–10	Public Availability of Information.	4/04/72	5/31/72	37 FR 23085	(b).	
22a–174–11	Prohibition against concealment of circumvention.	4/04/72	5/31/72	37 FR 23085	(b).	
22a–174–12	Violations and enforcement.	4/4/72	5/31/72	37 FR 23085	(b).	
22a–174–13	Variances	4/4/72	5/31/72	37 FR 23085	(b).	
		8/31/79	12/23/80	45 FR 84769	(c) 11	Non-substantive numbering change.
22a–174–14	Compliance with regulation no defense to nuisance claim.	4/04/72	5/31/72	37 FR 10842	(b).	
22a–174–15	Severability	4/4/72	5/31/72	37 FR 10842	(b).	
22a–174–16	Responsibility to comply with applicable regulations.	4/4/72	5/31/72	37 FR 10842	(b).	

TABLE 52.385—EPA-APPROVED REGULATIONS—Continued

Connecticut State citation	Title/subject	Dates		Federal Register citation	Section 52.370	Comments/description
		Date adopted by State	Date approved by EPA			
22a–174–17	Control of open burning.	4/04/72	5/31/72	37 FR 10842	(b).	
22a–174–18	Control of particulate emissions.	4/4/72	5/31/72	37 FR 10842	(b).	
		11/30/73	4/16/74	39 FR 13651	52.375	Allowed Hartford Electric Light & Connecticut Light & Power Supplies to use nonconforming fuel from 12/3/73 to 1/1/74.
		7/11/81	9/23/82	47 FR 41958	(c) 22	Defines TSP RACT for fuel burning equipment and process sources including cupolas, foundries, and hot mix asphalt plants.
22a–174–19	Control of sulfur compound emissions.	4/4/72	5/31/72	37 FR 23085	(b).	
		11/30/73	4/16/74	39 FR 13651	52.375	Allowed Hartford Electric Light and Connecticut Power and Light to use nonconforming fuel.
		4/3/79	7/30/79	44 FR 44498	(c) 10	Allowed Northeast Utilities to purchase, store, and burn nonconforming fuel.
		9/8/80	4/27/81	46 FR 23412	(c) 12	Variance for Federal Paperboard, Inc.
		12/19/80 & 3/11/81	8/28/81	46 FR 43418	(c) 14	Amends sulfur control strategy.
		3/11/81 & 7/15/81	8/28/81	46 FR 43418	(c) 15	Amends New Source Ambient Impact Analysis Guideline.
		3/17/81	10/23/81	46 FR 51914	(c) 17	Variance for Uniroyal, Inc.
		11/2/81	11/18/81	46 FR 56612	(c) 18	Approval State Energy Trade program.
		11/14/75	11/18/81	46 FR 56612	52.380 (e)(1)	EPA disapproval revision which allows exemption for home heating with coal, historic demonstrations, and other small sources.
		11/12/81	12/22/81	46 FR 62062	(c) 19	Variances for United Technologies Corp., Pratt & Whitney Aircraft Division facilities in New Haven and Middletown.

TABLE 52.385—EPA-APPROVED REGULATIONS—Continued

Connecticut State citation	Title/subject	Dates		Federal Register citation	Section 52.370	Comments/description
		Date adopted by State	Date approved by EPA			
		7/7/81	11/12/82	47 FR 51129	(c) 24	Variance for Sikorsky Aircraft—approved under the State Energy Trade Program.
		5/27/82	2/8/83	48 FR 5723	(c) 26	Variance for Dow Chemical—approved under the State Energy Trade Program.
		12/15/82	5/4/83	48 FR 20051	(c) 27	Variance for Lydall, Inc.—approved under the State Energy trade (SET) Program.
		11/1/82	6/28/83	48 FR 29689	(c) 28	Simkins Industries—approved under the State Energy Trade Program.
		3/28/83	12/20/83	48 FR 56218	(c) 30	Variance for Loomis Institute—approved under the State Energy Trade Program.
		2/19/93	1/18/94	59 FR 2531	(c) 63	Changes requirements at Himilton Standard Division of UTC.
22a–174–20	Control of organic compound emissions.	4/4/72	5/31/72	37 FR 23085	(b).	
		8/31/79	12/23/80	45 FR 84769	(c) 11	Requirements for certain Group I CTG source categories. Conditionally approved cutback asphalt and solvent metal cleaning categories.
		10/10/80	1/17/82	47 FR 762	(c) 20	Requirements for cutback asphalt (Group I—CTG).
		10/10/80	2/17/82	47 FR 6827	(c) 25	Requirements for Group II CTGs exclusive of controlling gasoline tank truck leaks, petroleum liquid storage external floating roof tanks, manufacture of vegetable oil, pneumatic rubber tire categories. Other VOC rules.

TABLE 52.385—EPA-APPROVED REGULATIONS—Continued

Connecticut State citation	Title/subject	Dates		Federal Register citation	Section 52.370	Comments/description
		Date adopted by State	Date approved by EPA			
		10/10/80	6/7/82	47 FR 24452	(c) 23	Alternative emission reduction provisions.
		12/10/82	2/1/84	49 FR 3989	(c) 29	Requirements for small open top degreasers (Group I—CTG).
		9/24/83	2/1/84	49 FR 3989	(c) 29	Exempts colds cleaners at auto repair facilities.
		9/24/83	3/21/84	49 FR 10542	(c) 32	Adds degreasing requirements for conveyorized and cold cleaning operations.
		8/31/79	3/21/84	49 FR 10542	(c) 32	Requirements for solvent metal cleaning (Group I CTG).
		9/24/83	3/21/84	49 FR 10542	(c) 32	Exempts storage vessels from submerged fill. Delays effective date of Stage I vapor recovery by 1 year. Requires RACT for all major sources of VOC not covered under a CTG document.
		9/24/83	10/19/84	49 FR 41026	(c) 33	Adds major non-ctg sources covered by 20(ee) to applicability, compliance, alternative emission reduction and seasonal operation after burner provisions.
		12/13/84	7/18/85	50 FR 29229	(c) 34	Revision to cutback asphalt regulation. Requires facilities with external floating roofs to install secondary seats. Changes to gasoline tank truck regulation.
		4/23/86	11/20/86	51 FR 41963	(c) 36	VOC RACT for Connecticut Charcoal Company.
		4/28/86	2/19/87	52 FR 5104	(c) 37	VOC RACT for King Industries.
		8/8/87	12/17/87	52 FR 47925	(c) 39	VOC RACT for Belding Corticelli Thread Company.
		5/28/86	2/17/88	51 FR 4621	(c) 41	Effective date clarification for Connecticut Charcoal.

TABLE 52.385—EPA-APPROVED REGULATIONS—Continued

Connecticut State citation	Title/subject	Dates		Federal Register citation	Section 52.370	Comments/description
		Date adopted by State	Date approved by EPA			
		9/24/87	4/11/88	53 FR 11847	(c) 42	VOC RACT for Raymark Industries, Inc.
		2/2/87	5/19/88	53 FR 17934	(c) 38	Clarifies applicability of VOC compliance methods for surface coating sources.
		3/17/87	5/19/88	53 FR 17934	(c) 38	Adds regulations for SOCMI fugitive leaks and polystyrene resins.
		8/21/87	7/12/88	53 FR 26256	(c) 44	VOC RACT for Spongex International Ltd.
		12/26/86	8/1/88	53 FR 28884	(c) 43	VOC RACT for American Cyanamid Company.
		10/27/88	3/8/89	54 FR 9781	(c) 48	VOC RACT for Dow Chemical, U.S.A.
		6/7/88	3/24/89	54 FR 12193	(c) 46	VOC RACT for New Departure Hyatt.
		12/14/88	4/10/89	54 FR 14226	(c) 49	VOC RACT for Stanadyne.
		3/22/89	5/30/89	54 FR 22891	(c) 51	VOC RACT for Pratt & Whitney Division of UTC.
		12/30/88	6/2/89	54 FR 23650	(c) 50	Changes limit on volatility of gasoline.
		10/19/87	11/28/89	54 FR 48885	(c) 47	VOC RACT for Frismar, Inc.
		10/18/88	11/39/89	54 FR 49284	(c) 52	VOC RACT for Pfizer, Inc.
		9/5/89	12/22/89	54 FR 52798	(c) 53	VOC RACT for Uniroyal Chemical Co.
		11/29/89	3/12/90	55 FR 9121	(c) 54	VOC RACT for Hamilton Standard Division of United Technologies Corp.
		11/2/88	3/14/90	55 FR 9442	(c) 55	VOC RACT for Heminway & Bartlett Manufacturing Company.
		10/31/89	10/18/91	56 FR 52205	(c) 58	Changes applicability to facilities with >=15 pounds VOC per day.
		10/31/89	10/18/91	56 FR 52205	(c) 58	Various changes to Section 20 approved.
		9/1/93	11/19/93	58 FR 61041	.....	Withdrawal of NPR for Sikorsky Aircraft Division of UTC, Bridgeport.
		1/29/90, 9/29/95, & 2/7/96	2/9/98	63 FR 6484	(c) (60)	VOC RACT for Sikorsky Aircraft Corporation in Stratford.

TABLE 52.385—EPA-APPROVED REGULATIONS—Continued

Connecticut State citation	Title/subject	Dates		Federal Register citation	Section 52.370	Comments/description
		Date adopted by State	Date approved by EPA			
		6/3/96	4/24/98	63 FR 20318	(c) (73)	Alternative VOC RACT for Risdon Corporation in Danbury.
		11/18/93	3/10/99	64 FR 12024	(c)(75)	Changes to subsection 22a–174–20(s), 20(v), and 20(ee).
	Loading gasoline and other volatile organic compounds.	4/1/98	10/19/00	65 FR 62624	(c)(84)	Changes to gasoline and volatile organic loading regulations.
	Metal cleaning ..	8/23/96	10/19/00	65 FR 62624	(c)(84)	Changes to metal cleaning regulations.
	Miscellaneous metal parts and products.	8/1/95	10/19/00	65 FR 62624	(c)(84)	Changes to regulations to add emission limit for architectural aluminum panels.
22a–174–21	Control of carbon monoxide emissions.	4/4/72	5/31/72	37 FR 23085	(b).	
		9/21/82	3/21/84	49 FR 10542	(c) 32	CO attainment plan.
22a–174–22	Control of Nitrogen Oxides Emissions.	11/19/96	9/28/99	64 FR 52238	(c)(82)	Case-specific trading order for AlliedSignal, Inc., and U.S. Army Tank-Automotive and Armaments Command in Stratford.
22a–174–22	Control of Nitrogen Oxides Emissions.	11/19/96	9/28/99	64 FR 52238	(c)(82)	Case-specific trading order for Connecticut Natural Gas Corporation in Rocky Hill.
22a–174–22	Control of Nitrogen Oxides Emissions.	12/20/96	9/28/99	64 FR 52238	(c)(82)	Case-specific trading order for Cytec Industries, Inc., in Wallingford.
22a–174–22	Control of Nitrogen Oxides Emissions.	6/25/97	9/28/99	64 FR 52238	(c)(82)	Amendments to case-specific trading order for Connecticut Natural Gas Corporation.
22a–174–22	Control of Nitrogen Oxides Emissions.	7/8/97	9/28/99	64 FR 52238	(c)(82)	Amendments to case-specific trading order for AlliedSignal, Inc., and U.S. Army Tank-Automotive and Armaments Command in Stratford.

TABLE 52.385—EPA-APPROVED REGULATIONS—Continued

Connecticut State citation	Title/subject	Dates		Federal Register citation	Section 52.370	Comments/description
		Date adopted by State	Date approved by EPA			
22a–174–22	Control of Nitrogen Oxides Emissions.	7/23/97	9/28/99	64 FR 52238	(c)(82)	Case-specific trading order for Ogden Martin Systems of Bristol, Inc., in Bristol.
22a–174–22	Control of NO_X nitrogen oxide emissions.	1/12/00	3/23/01	66 FR 16137	(c)(88)	Case-specific trading order for Wisvest Bridgeport Harbor Station's Unit No. 2 in Bridgeport.
		5/22/00	3/23/01	66 FR 16137	(c)(88)	Amendment to case-specific trading order for Ogden Martin System's facility in Bristol.
		5/22/00	3/23/01	66 FR 16137	(c)(88)	Amendment to case-specific trading order for Connecticut Resources Recovery Authority.
		5/22/00	3/23/01	66 FR 16137	(c)(88)	Amendment to case-specific order for American Ref-Fuel Company.
		5/22/00	3/23/01	66 FR 16137	(c)(88)	Amendment to case-specific trading order for Bridgeport Resco Company.
		5/22/00	3/23/01	66 FR 16137	(c)(88)	Case-specific trading order for Wisvest Bridgeport Harbor Station's Unit No. 4 in Bridgeport.
		5/22/00	3/23/01	66 FR 16137	(c)(88)	Case-specific trading order for Wisvest New Haven Harbor Station's auxiliary Boiler in New Haven.
		5/31/00	3/23/01	66 FR 16137	(c)(88)	Case-specific trading order for Wisvest Bridgeport Harbor Station's Unit No. 3 in Bridgeport.
		5/31/00	3/23/01	66 FR 16137	(c)(88)	Case-specific trading order for Wisvest New Haven Harbor Station's Unit No. 1 in New Haven.
22a–174–22a	Nitrogen Oxides (NO_X)Budget Program.	12/15/98	9/28/99	64 FR 52238	(c)(80)	Approval of NO_X cap and allowance trading regulations.

TABLE 52.385—EPA-APPROVED REGULATIONS—Continued

Connecticut State citation	Title/subject	Dates		Federal Register citation	Section 52.370	Comments/description
		Date adopted by State	Date approved by EPA			
22a–174–22b	Post-2002 Nitrogen Oxides (NO_X) Budget Program.	9/29/99	12/27/00	65 FR 81746	(c)86.	
22a–174–23	Control of Odors	4/4/72	5/31/72	37 FR 23085	(b).	
	Rescinded from Federal SIP.	8/31/79	12/23/80	45 FR 84769	(c) 11	EPA has no authority to control odors.
22a–174–24	Connecticut primary and secondary standards.	4/4/72	5/31/72	37 FR 23085	(b).	
		7/11/81	11/18/81	46 FR 56612	(c) 18	Eliminated State 24-hour and annual standard for SO2.
		10/8/80	2/17/82	47 FR 6827	(c) 25	Adopted ambient air quality standards for lead and revised the ozone standard.
		10/8/80	8/24/82	47 FR 36822	(c) 20	EPA took "no action" on definition of the term "acceptable method" because did not ensure consistency with EPA monitoring regulations.
		10/8/80	11/2/82	47 FR 49646	(c) 20	Correction to subparagraph designation.
		10/8/80	12/13/85	50 FR 50906	(c) 35	Approved definition of acceptable method.
		2/25/91	3/24/92	57 FR 10139	(c) 61	Requires use of low sulfur fuels at Connecticut Light & Power in Montville.
		2/14/92	11/20/92	57 FR 54703	(c) 59	Requires use of low sulfur fuels at Stones CT Paperboard Corp.
		2/5/92	11/20/92	57 FR 54703	(c) 59	Requires use of low sulfur fuel at Hartford Hospital.
22a–174–25	Effective date	4/4/72	5/31/72	37 FR 23085	(b).	
22a–174–27	Emissions standards for periodic motor vehicle inspection and maintenance.	3/26/98	3/10/99	64 FR 12005	(c)78	Revised Department of Environmental Protection regulation contain I/M emission standards.

TABLE 52.385—EPA-APPROVED REGULATIONS—Continued

Connecticut State citation	Title/subject	Dates		Federal Register citation	Section 52.370	Comments/description
		Date adopted by State	Date approved by EPA			
22a–174–28	SIP revision concerning Oxygenated Gasoline.	09/28/99	01/31/00	64 FR 67188	(c)(83)	This SIP revision removes the oxygenated gasoline requirement for the Connecticut portion of the New York—N. New Jersey—Long Island area and changes it to a continency measure for maintaining the carbon monoxide National Ambient Air Quality Standard in the southwest Connecticut area.
14–164c	Periodic Motor Vehicle Inspection and Maintenance.	4/7/98	3/10/99	64 FR 12005	(c)78	Revised Department of Motor Vehicles regulation for the Connecticut I/M Program.
		6/24/99	10/27/00	10/27/00, 65 FR 64360.	(c)89	Revised subsection (b) of Section 14–164c–11a of the Department of Motor Vehicles regulation concerning emissions repairs expenditure requirement to receive waver.
22a–174–30	Gasoline Vapor Recovery.	1/12/93	12/17/93	58 FR 65930	(c) 62	Requires Stage II vapor recovery from gasoline dispensers.
			1/18/94	59 FR 2649	(c) 62	Correction to 12/17/93 notice.
22a–174–32	Reasonably available control technology for volatile organic compounds.	11/18/93	3/10/99	64 FR 12024	(c)(76)	Conditional approval of the addition of non-CTG VOC RACT requirements.
174		8/27/99	10/19/00	65 FR 62624	(c)(84)	Changes to the non-CTG regulation.
22a–174–36	Low Emission Vehicles.	12/23/94	3/9/00	65 FR 12479	(c)(79)	Approval of Low Emission Vehicle Program.
22a–174–36(g)	Alternative Means of Compliance via the National Low Emission Vehicle (LEV) Program.	1/29/99	3/9/00	65 FR 12479	(c)(79)	Approval of Alternative Means of Compliance via the National Low Emission Vehicle (LEV) Program for the "California" low emission vehicle program adopted above.

TABLE 52.385—EPA-APPROVED REGULATIONS—Continued

Connecticut State citation	Title/subject	Dates		Federal Register citation	Section 52.370	Comments/description
		Date adopted by State	Date approved by EPA			
22a–174–38	Municipal Waste Combustors.	10/26/00	12/6/01	66 FR 63312	c(90)	The nitrogen oxide emission limits and related regulatory provisions of 22a–174–38, Municipal Waste Combustors, included in sections 22a–174–38 (a), (b), (c), (d), (i), (j), (k), (l), and (m).
22a–174–100	Permits for construction of indirect sources Rescinded from federal SIP.	1/9/74	2/25/74	39 FR 7280	(c) 4	Requires review of air impacts of indirect sources.
		8/20/74	2/13/76	41 FR 6765	(c) 6	Added indirect source review (ISR) regulations.
		6/30/77	1/26/79	44 FR 5427	(c) 9.	
		NA	12/23/79	45 FR 84769	(c) 11	SIP shown to attain standards as expeditiously as practicable without ISR regulation.

[62 FR 52022, Oct. 6, 1997; 62 FR 65224, Dec. 11, 1997, as amended at 63 FR 6487, Feb. 9, 1998; 63 FR 20318, Apr. 24, 1998; 64 FR 12024, Mar. 10, 1999; 64 FR 52238, Sept. 28, 1999; 64 FR 67192, Dec. 1, 1999; 65 FR 12479, Mar. 9, 2000; 65 FR 62624, Oct. 19, 2000; 65 FR 64360, Oct. 27, 2000; 65 FR 81746, Dec. 27, 2000; 66 FR 16137, Mar. 23, 2001; 66 FR 63312, Dec. 6, 2001; 68 FR 9011, Feb. 27, 2003]

Subpart I—Delaware

§ 52.420 Identification of plan.

(a) *Purpose and scope.* This section sets forth the applicable State implementation plan for Delaware under section 110 of the Clean Air Act, 42 U.S.C. 7410, and 40 CFR part 51 to meet national ambient air quality standards.

(b) *Incorporation by reference.* (1) Material listed as incorporated by reference in paragraphs (c) and (d) was approved for incorporation by reference by the Director of the Federal Register in accordance with 5 U.S.C. 552(a) and 1 CFR part 51. Material is incorporated as it exists on the date of the approval, and notice of any change in the material will be published in the FEDERAL REGISTER. Entries in paragraphs (c) and (d) of this section with EPA approval dates on or after June 1, 2004 will be incorporated by reference in the next update to the SIP compilation.

(2) EPA Region III certifies that the rules/regulations provided by EPA at the addresses in paragraph (b)(3) of this section are an exact duplicate of the officially promulgated State rules/regulations which have been approved as part of the Delaware State implementation plan as of June 1, 2004.

(3) Copies of the materials incorporated by reference may be inspected at the EPA Region III Office at 1650 Arch Street, Philadelphia, PA 19103; the EPA, Air and Radiation Docket and Information Center, Air Docket (6102), 1301 Constitution Avenue, NW., Room B108, Washington, DC 20460; or the National Archives and Records Administration (NARA). For information on the availability of this material at NARA, call (202) 741–6030, or go to: *http://www.archives.gov/federal_register/*

code_of_federal_regulations/ibr_locations.html.

(c) *EPA approved regulations.*

EPA-APPROVED REGULATIONS IN THE DELAWARE SIP

State citation	Title/subject	State effective date	EPA approval date	Additional explanation
Regulation 1—Definitions and Administrative Principles				
Section 1	General Provisions ...	5/28/74	03/23/76 41 FR 12010	
Section 2	Definitions	10/11/98	3/11/99 64 FR 12085	
Section 2	Definitions	2/8/95	9/9/99 64 FR 48961 *—New Installation, Equipment, Source, or Operation.	**New Definitions:** (Effective date: 1/7/77) —Capacity factor. —Continuous monitoring system. —Emission standard. —Equipment shutdown. —Excess Emissions. (Effective Date: 9/26/78). —Sulfuric Acid Plant. **Revised Definitions:** (Effective date: 1/7/77). —Existing Installation, Equipment, Source, or Operation.
Section 3	Administrative Principles.	1/7/72	05/31/72 37 FR 10842	
Section 4	Abbreviations	2/1/81	3/15/82 48 FR 11013	Abbreviation of "CAA" only.
Regulation 2—Permits				
Section 1	General Provisions ...	6/1/97	1/13/00 65 FR 2048	
Section 2	Applicability	6/1/97	1/13/00 65 FR 2048	
Section 3	Applications Prepared by Interested Parties.	6/1/97	1/13/00 65 FR 2048	
Section 4	Cancellation of Construction Permits.	6/1/97	1/13/00 65 FR 2048	
Section 5	Action on Applications.	6/1/97	1/13/00 65 FR 2048	
Section 6	Denial, Suspension or Revocation of Operating Permits.	6/1/97	1/13/00 65 FR 2048	
Section 7	Transfer of Permit/Registration Prohibited.	6/1/97	1/13/00 65 FR 2048	
Section 8	Availability of Permit/Registration.	6/1/97	1/13/00 65 FR 2048	
Section 9	Registration Submittal	6/1/97	1/13/00 65 FR 2048	
Section 10	Source Category Permit Application.	6/1/97	1/13/00 65 FR 2048	

EPA-APPROVED REGULATIONS IN THE DELAWARE SIP—Continued

State citation	Title/subject	State effective date	EPA approval date	Additional explanation
Section 11	Permit Application	6/1/97	1/13/00 65 FR 2048	
Section 12	Public Participation ...	6/1/97	1/13/00 65 FR 2048	Limited approval.
Section 13	Department Records	6/1/97	1/13/00 65 FR 2048	
Regulation 3—Ambient Air Quality Standards				
Section 1	General Provisions ...	03/29/88	4/6/94 48 FR 46986	
Section 2	General Restrictions	3/11/80	10/30/81 46 FR 53663	
Section 3	Suspended Particulates.	3/11/80	10/30/81 46 FR 53663	
Section 4	Sulfur Dioxide	3/11/80	10/30/81 46 FR 53663	
Section 5	Carbon Monoxide	3/11/80	10/30/81 46 FR 53663	
Section 6	Ozone	3/11/80	10/30/81 46 FR 53663	
Section 8	Nitrogen Dioxide	3/11/80	10/30/81 46 FR 53663	
Section 10	Lead	3/11/80	3/11/82 48 FR 10535	
Section 11	PM_{10} Particulates	12/7/88	4/6/94 48 FR 46986	
Regulation 4—Particulate Emissions From Fuel Burning Equipment				
Section 1	General Provisions ...	5/28/74	3/23/76 41 FR 12010	
Section 2	Emission Limits	5/28/74	3/23/76 41 FR 12010	
Regulation 5—Particulate Emissions From Industrial Process Operations				
Section 1	General Provisions ...	5/28/74	3/23/76 41 FR 12010	
Section 2	General Restrictions	5/28/74	3/23/76 41 FR 12010	
Section 3	Restrictions on Hot Mix Asphalt Batching Operations.	5/28/74	3/23/76 41 FR 12010	
Section 4	Restrictions on Secondary Metal Operations.	12/2/77	07/30/79 44 FR 44497	
Section 5	Restrictions on Petroleum Refining Operations.	9/26/78	9/9/99 64 FR 48961	
Section 6	Restrictions on Prill Tower Operations.	9/26/78	08/01/80 45 FR 51198	

EPA-APPROVED REGULATIONS IN THE DELAWARE SIP—Continued

State citation	Title/subject	State effective date	EPA approval date	Additional explanation
Section 7	Control of Potentially Hazardous Particulate Matter.	1/7/72	5/31/72 37 FR 10842	
Regulation 6—Particulate Emissions From Construction and Materials Handling				
Section 1	General Provisions ...	1/7/72	05/31/72 37 FR 10842	
Section 2	Demolition	5/28/74	03/23/76 41 FR 12010	
Section 3	Grading, Land Clearing, Excavation and Use of Non-Paved Roads.	5/28/74	03/23/76 41 FR 12010	
Section 4	Material Movement ...	5/28/74	03/23/76 41 FR 12010	
Section 5	Sandblasting	5/28/74	03/23/76 41 FR 12010	
Section 6	Material Storage	5/28/74	03/23/76 41 FR 12010	
Regulation 7—Particulate Emissions From Incineration				
Section 1	General Provisions ...	05/28/74	03/23/76 41 FR 12010	
Section 2	Restrictions	12/8/83	10/3/84 49 FR 39061	Provisions were revised 10/13/89 by State, but not submitted to EPA as SIP revisions.
Regulation 8—Sulfur Dioxide Emissions From Fuel Burning Equipment				
Section 1	General Provisions ...	12/8/83	10/3/84 49 FR 39061	
Section 2	Limit on Sulfur Content of Fuel.	5/9/85	12/08/86 51 FR 44068	
Section 3	Emissions Control in Lieu of Sulfur Content Limits of Section 2.	5/9/85	12/08/86 51 FR 44068	
Regulation 9—Emissions of Sulfur Compounds From Industrial Operations				
Section 1	General Provisions ...	5/9/85	12/08/86 51 FR 44068	
Section 2	Restrictions on Sulfuric Acid Manufacturing Operations.	9/26/78	9/9/99 64 FR 48961	1. On 3/11/1982 (47 FR 10535), EPA approved revisions to Section 2 with a State effective date of 12/29/1980. 2. Section 2.2 (State effective date: 9/26/1980) is federally enforceable as a Section 111(d) plan and codified at 40 CFR 62.1875.
Section 3	Restriction on Sulfur Recovery Operations.	5/28/74	03/23/76 41 FR 12010	
Section 4	Stack Height Requirements.	4/18/83	09/21/83 48 FR 42979	

EPA-APPROVED REGULATIONS IN THE DELAWARE SIP—Continued

State citation	Title/subject	State effective date	EPA approval date	Additional explanation
Regulation 10—Control of Sulfur Dioxide Emissions—Kent and Sussex Counties				
Section 1	Requirements for Existing Sources of Sulfur Dioxide.	1/7/72	05/31/72 37 FR 10842	
Section 2	Requirements for New Sources of Sulfur Dioxide.	5/28/74	03/23/76 41 FR 12010	
Regulation 11—Carbon Monoxide Emissions from Industrial Process Operations—New Castle County				
Section 1	General Provisions ...	5/28/74	03/23/76 41 FR 12010	
Section 2	Restrictions on Petroleum Refining Operations.	1/7/72	05/31/72 37 FR 10842	Citation revised 3/23/76, 41 FR 12010.
Regulation 12—Control of Nitrogen Oxide Emissions				
Section 1	Applicability	11/24/93	6/14/01 66 FR 32234	
Section 2	Definitions	11/24/93	6/14/01 66 FR 32234	
Section 3	Standards	11/24/93	6/14/01 66 FR 32234	
Section 4	Exemptions	11/24/93	6/14/01 66 FR 32234	
Section 5	Alternative and Equivalent RACT Determinations.	11/24/93	6/14/01 66 FR 32234	
Section 6	RACT Proposals	11/24/93	6/14/01 66 FR 32234	
Section 7	Compliance, Certification, Recordkeeping, and Reporting Requirements.	11/24/93	6/14/01 66 FR 32234	
Regulation 13—Open Burning				
Section 1	Prohibitions-All Counties.	2/8/95	03/12/97 62 FR 11329	EPA effective date is 5/1/98.
Section 2	Prohibitions-Specific Counties.	2/8/95	03/12/97 62 FR 11329	EPA effective date is 5/1/98.
Section 3	General Restrictions-All Counties.	2/8/95	03/12/97 62 FR 11329	EPA effective date is 5/1/98.
Section 4	Exemptions-All Counties.	2/8/95	03/12/97 62 FR 11329	EPA effective date is 5/1/98.
Regulation 14—Visible Emissions				
Section 1	General Provisions ...	7/17/84	07/02/85 50 FR 27244	
Section 2	Requirements	7/17/84	07/02/85 50 FR 27244	
Section 3	Alternate Opacity Requirements.	7/17/84	07/02/85 50 FR 27244	

EPA-APPROVED REGULATIONS IN THE DELAWARE SIP—Continued

State citation	Title/subject	State effective date	EPA approval date	Additional explanation
Section 4	Compliance with Opacity Standards.	7/17/84	07/02/85 50 FR 27244	
Regulation 15—Air Pollution Alert and Emergency Plan				
Section 1	General Provisions ...	1/7/72	05/31/72 37 FR 10842	
Section 2	Stages and Criteria ...	3/29/88	04/06/94 59 FR 16140	
Section 3	Required Actions	1/7/72	5/31/72 37 FR 10842	Delaware removed the word "standby" from Table III, section 3B effective 5/28/74, but did not submit as a SIP revision.
Section 4	Standby Plans	1/7/72	05/31/72 37 FR 10842	
Regulation 16—Sources Having an Interstate Air Pollution Potential				
Section 1	General Provisions ...	1/7/72	05/31/72 37 FR 10842	Delaware revised provision effective 5/28/74, but did not submit as a SIP revision.
Section 2	Limitations	1/7/72	05/31/72 37 FR 10842	
Section 3	Requirements	1/7/72	05/31/72 37 FR 10842	
Regulation 17—Source Monitoring, Record-keeping and Reporting				
Section 1	Definitions and Administrative Principles.	1/11/93	02/28/96 61 FR 7453	
Section 2	Sampling and Monitoring.	7/17/84	07/02/85 50 FR 27244	Former SIP Sections 1 through 5 respectively; citation revised 2/28/96, 62 FR 7453.
Section 3	Minimum Emission Monitoring Requirements for Existing Sources.	1/10/77	8/25/81 46 FR 43150	
Section 4	Performance Specifications.	1/11/93	9/9/99 64 FR 48961	
Section 5	Minimum Data Requirements.	1/10/77	8/25/81 46 FR 43150	
Section 6	Data Reduction	1/11/93	9/9/99 64 FR 48961	
Section 7	Emission Statement ..	1/11/93	02/28/96 61 FR 7453	
Regulation 23—Standards of Performance for Steel Plants: Electric Arc Furnaces				
Section 1	Applicability	12/2/77	07/30/79 44 FR 44497	Correction published 8/20/80, 45 FR 55422.
Section 2	Definitions	04/18/83	09/21/83 49 FR 39061	
Section 3	Standard for Particulate Matter.	04/18/83	09/21/83 49 FR 39061	
Section 4	Monitoring of Operations.	12/2/77	07/30/79 44 FR 44497	Correction published 8/20/80, 45 FR 55422.

EPA-APPROVED REGULATIONS IN THE DELAWARE SIP—Continued

State citation	Title/subject	State effective date	EPA approval date	Additional explanation
Section 5	Test Methods and Procedures.	12/2/77	07/30/79 44 FR 44497	Correction published 8/20/80, 45 FR 55422.
Regulation 24—Control of Volatile Organic Compound Emissions				
Section 1	General Provisions ...	1/11/93	5/3/95 60 FR 21707	
Section 2	Definitions	1/11/02	11/14/03 68 FR 64540	
Section 3	Applicability	1/11/93	5/3/95 60 FR 21707	
Section 4	Compliance Certification, Recordkeeping, and Reporting Requirements for Coating Sources.	11/29/94	01/26/96 61 FR 2419	
Section 5	Compliance Certification, Recordkeeping, and Reporting Requirements for Non-Coating Sources.	1/11/93	5/3/95 60 FR 21707	
Section 6	General Recordkeeping.	1/11/93	5/3/95 60 FR 21707	
Section 7	Circumvention	1/11/93	5/3/95 60 FR 21707	
Section 8	Handling, Storage, and Disposal of Volatile Organic Compounds (VOCs).	11/29/94	01/26/96 61 FR 2419	
Section 9	Compliance, Permits, Enforceability.	1/11/93	5/3/95 60 FR 21707	
Section 10	Aerospace Coatings	2/11/03	3/24/04 69 FR 13737	SIP effective date is 5/24/04.
Section 11	Mobile Equipment Repair and Refinishing.	11/11/01	11/22/02 67 FR 70315	
Section 12	Surface Coating of Plastic Parts.	11/29/94	01/26/96 61 FR 2419	
Section 13	Automobile and Light-Duty Truck Coating Operations.	1/11/93	5/3/95 60 FR 21707	
Section 14	Can Coating	1/11/93	5/3/95 60 21707	
Section 15	Coil Coating	1/11/93	5/3/95 60 21707	
Section 16	Paper Coating	1/11/93	5/3/95 60 21707	
Section 17	Fabric Coating	1/11/93	5/3/95 60 FR 21707	

EPA-APPROVED REGULATIONS IN THE DELAWARE SIP—Continued

State citation	Title/subject	State effective date	EPA approval date	Additional explanation
Section 18	Vinyl Coating	1/11/93	5/3/95 60 FR 21707	
Section 19	Coating of Metal Furniture.	1/11/93	5/3/95 60 FR 21707	
Section 20	Coating of Large Appliances.	1/11/93	5/3/95 60 FR 21707	
Section 21	Coating of Magnet Wire.	11/29/94	01/26/96 60 FR 2419	
Section 22	Coating of Miscellaneous Metal Parts.	1/11/93	5/3/95 60 FR 21707	
Section 23	Coating of Flat Wood Panelling.	1/11/93	5/3/95 60 FR 21707	
Section 24	Bulk Gasoline Plants	1/11/93	5/3/95 60 FR 21707	
Section 25	Bulk Gasoline Terminals.	11/29/94	01/26/96 61 FR 2419	
Section 26	Gasoline Dispensing Facility-Stage I Vapor Recovery.	1/11/02	11/14/03 68 FR 64540	
Section 27	Gasoline Tank Trucks	1/11/93	5/3/95 60 FR 21707	
Section 28	Petroleum Refinery Sources.	1/11/93	5/3/95 60 FR 21707	
Section 29	Leaks from Petroleum Refinery Equipment.	11/29/94	01/26/96 61 FR 2419	
Section 30	Petroleum Liquid Storage in External Floating Roof Tanks.	11/29/94	01/26/96 61 FR 2419	
Section 31	Petroleum Liquid Storage Fixed Roof Tanks.	11/29/94	01/26/96 61 FR 2419	
Section 32	Leaks from Natural Gas/Gasoline Processing Equipment.	11/29/94	01/26/96 61 FR 2419	
Section 33	Solvent Metal Cleaning and Drying.	11/11/01	11/22/02 67 FR 70315	
Section 34	Cutback and Emulsified Asphalt.	1/11/93	5/3/95 60 FR 21707	
Section 35	Manufacture of Synthesized Pharmaceutical Products.	11/29/94	01/26/96 61 FR 2419	
Section 36	Stage II Vapor Recovery.	1/11/93	6/10/94 59 FR 29956	
Section 37	Graphic Arts Systems	11/29/94	01/26/96 61 FR 2419	
Section 38	Petroleum Solvent Dry Cleaners.	1/11/93	5/3/95 60 FR 21707	

EPA-APPROVED REGULATIONS IN THE DELAWARE SIP—Continued

State citation	Title/subject	State effective date	EPA approval date	Additional explanation
Section 39	Perchloroethylene Dry Cleaning.	1/11/93	5/3/95 60 FR 21707	
Section 40	Leaks from Synthetic Organic Chemical, Polymer, and Resin Manufacturing Equipment.	1/11/93	5/3/95 60 FR 21707	
Section 41	Manufacture of High-Density Polyethylene, Polypropylene and Polystyrene Resins.	1/11/93	5/3/95 60 FR 21707	
Section 42	Air Oxidation Processes in the Synthetic Organic Chemical Manufacturing Industry.	1/11/93	5/3/95 60 FR 21707	
Section 43	Bulk Gasoline Marine Tank Vessel Loading Facilities.	11/29/94	01/26/96 61 FR 2419	
Section 44	Batch Processing Operations.	11/29/94	01/26/96 61 FR 2419	
Section 45	Industrial Cleaning Solvents.	11/29/94	01/26/96 61 FR 2419	
Section 47	Offset Lithographic Printing.	11/29/94	05/14/97 62 FR 26399	
Section 48	Reactor Processes and Distillation Operations in the Synthetic Organic Chemical Manufacturing Industry.	11/29/94	01/26/96 61 FR 2419	
Section 49	Control of Volatile Organic Compound Emissions from Volatile Organic Liquid Storage Vessels.	11/29/94	01/26/96 61 FR 2419	
Section 50	Other Facilities that Emit Volatile Organic Compounds (VOCs).	11/29/94	03/12/97 62 FR 11329	EPA effective date for Sections 50(a)(5) and 50(b)(3) is 5/1/98
Appendix "A"	Test Methods and Compliance Procedures: General Provisions.	11/29/94	01/26/96 61 FR 2419	
Appendix "B"	Test Methods and Compliance Procedures: Determining the Volatile Organic Compound (VOC) Content of Coatings and Inks.	1/11/93	5/3/95 60 FR 21707	

EPA-APPROVED REGULATIONS IN THE DELAWARE SIP—Continued

State citation	Title/subject	State effective date	EPA approval date	Additional explanation
Appendix "C"	Test Methods and Compliance Procedures: Alternative Compliance Methods for Surface Coating.	1/11/93	5/3/95 60 FR 21707	
Appendix "D"	Test Methods and Compliance Procedures: Emission Capture and Destruction or Removal Efficiency and Monitoring Requirements.	11/29/94	01/26/96 61 FR 2419	
Appendix "E"	Test Methods and Compliance Procedures: Determining the Destruction or Removal Efficiency of a Control Device.	1/11/93	5/3/95 60 FR 21707	
Appendix "F"	Test Methods and Compliance Procedures: Leak Detection Methods for Volatile Organic Compounds (VOCs).	1/11/93	5/3/95 60 FR 21707	
Appendix "G"	Performance Specifications for Continuous Emissions Monitoring of Total Hydrocarbons.	1/11/93	5/3/95 60 FR 21707	
Appendix "H"	Quality Control Procedures for Continuous Emission Monitoring Systems (CEMS).	1/11/93	5/3/95 60 FR 21707	
Appendix "I"	Method to Determine Length of Rolling Period for Liquid-Liquid Material Balance Method.	11/29/94	01/26/96 61 FR 2419	
Appendix "J"	Procedures for Implementation of Regulations Covering Stage II Vapor Recovery Systems for Gasoline Dispensing Facilities.	1/11/93	6/10/94 59 FR 29956	
Appendix "J1"	Certified Stage II Vapor Recovery Systems.	1/11/93	6/10/94 59 FR 29956	
Appendix "J2"	Pressure Decay/Leak Test Procedure for Verification of Proper Functioning of Stage I & Stage II Vapor Recovery Equipment.	1/11/93	6/10/94 59 FR 29956	

EPA-APPROVED REGULATIONS IN THE DELAWARE SIP—Continued

State citation	Title/subject	State effective date	EPA approval date	Additional explanation
Appendix "J3"	Dynamic Backpressure (Dry) Test and Liquid Blockage (Wet) Test Procedure for Verification of Proper Functioning of Stage II Vapor Balance Recovery Systems.	1/11/93	6/10/94 59 FR 29956	
Appendix "K"	Emission Estimation Methodologies.	11/29/94	01/26/96 61 FR 2419	
Appendix "L"	Method to Determine Total Organic Carbon for Offset Lithographic Solutions.	11/29/94	01/26/96 61 FR 2419	
Appendix "M"	Test Method for Determining the Performance of Alternative Cleaning Fluids.	11/29/94	01/26/96 61 FR 2419	
Regulation 25—Requirements for Preconstruction Review				
Section 1	General Provisions ...	1/1/93 (As Revised 5/1/99)	2/7/01 66 FR 9211	Excluding §§ 1.2, 1.6, 1.9(L), 1.9(M), 1.9(N), 1.9(O), which relate to Prevention of Significant Deterioration.
Section 2	Emission Offset Provisions (EOP).	1/1/93 (As Revised 5/1/99)	2/7/01 66 FR 9211	
Section 3	Prevention of Significant Deterioration of Air Quality.	5/15/90	01/27/93 58 FR 26689	
Regulation 26—Motor Vehicle Emissions Inspection Program				
Section 1	Applicability and Definitions.	2/12/01	11/27/03 68 FR 66343	Regulation 26 provisions apply to Sussex County only, effective November 1, 1999.
Section 2	General Provisions ...	2/12/01	11/27/03 68 FR 66343	
Section 3	Registration Requirement.	5/9/85	12/08/86 51 FR 44068	
Section 4	Exemptions	2/12/01	11/27/03 68 FR 66343	
Section 5	Enforcement	7/6/82	10/17/83 48 FR 46986	
Section 6	Compliance, Waivers, Extensions of Time.	2/12/01	11/27/03 68 FR 66343	
Section 7	Inspection Facility Requirements.	7/6/82	10/17/83 48 FR 46986	
Section 8	Certification of Motor Vehicle Officers.	7/6/82	10/17/83 48 FR 46986	
Section 9	Calibration and Test Procedures and Approved Equipment.	2/12/01	11/27/03 68 FR 66343	

EPA-APPROVED REGULATIONS IN THE DELAWARE SIP—Continued

State citation	Title/subject	State effective date	EPA approval date	Additional explanation
Technical Memorandum 1.	Delaware Division of Motor Vehicles Vehicle Exhaust Emissions Test.	2/12/01	11/27/03 68 FR 66343	
Regulation 27—Stack Heights				
Section 1	General Provisions ...	4/18/83	09/21/83 48 FR 42979	
Section 2	Definitions Specific to this Regulation.	12/7/88	06/29/90 55 FR 26689	
Section 3	Requirements for Existing and New Sources.	2/18/87	06/29/90 55 FR 26689	
Section 4	Public Notification	2/18/87	06/29/90 55 FR 26689	
Regulation 31—Low Enhanced Inspection and Maintenance Program				
Section 1	Applicability	10/11/01	11/27/03 68 FR 66343	
Section 2	Low Enhancement I/M performance standard.	10/11/01	1/27/03 68 FR 66343	
Section 3	Network Type and program evaluation.	10/11/01	11/27/03 68 FR 66343	
Section 4	Test Frequency and Convenience.	6/11/99	9/30/99 64 FR 52657	
Section 5	Vehicle Coverage	10/11/01	11/27/03 68 FR 66343	
Section 6	Test Procedures and Standards.	10/11/01	11/27/03 68 FR 66343	
Section 7	Waivers and Compliance via Diagnostic Inspection.	10/11/01	11/27/03 68 FR 66343	
Section 8	Motorist Compliance Enforcement.	10/11/01	11/27/03 68 FR 66343	
Section 9	Enforcement Against Operators and Motor Vehicle Techniques.	10/11/01	11/27/03 68 FR 66343	
Section 10	Improving Repair Effectiveness.	8/13/98	9/30/99 64 FR 52657	
Section 11	Compliance with Recall Notices.	8/13/98	9/30/99 64 FR 52657	
Section 12	On-Road Testing	8/13/98	9/30/99 64 FR 52657	
Section 13	Implementation Deadlines.	10/11/01	11/27/03 68 FR 66343	

EPA-APPROVED REGULATIONS IN THE DELAWARE SIP—Continued

State citation	Title/subject	State effective date	EPA approval date	Additional explanation
Appendix 1(d)	Commitment to Extend the I/M Program to the Attainment Date From Secretary Tulou to EPA Administrator W. Michael McCabe.	8/13/98	9/30/99 64 FR 52657	
Appendix 3(a)(7)	Exhaust Emission Limits According to Model Year.	8/13/98	9/30/99 64 FR 52657	
Appendix 3(c)(2)	VMASTM Test Procedure.	6/11/99	9/30/99 64 FR 52657	
Appendix 4(a)	Sections from Delaware Criminal and Traffic Law Manual.	8/13/98	9/30/99 64 FR 52657	
Appendix 5(a)	Division of Motor Vehicles Policy on Out of State Renewals.	8/13/98	9/30/99 64 FR 52657	
Appendix 5(f)	New Model Year Clean Screen.	10/11/01	11/27/03 68 FR 66343	
Appendix 6(a)	Idle Test Procedure ..	10/11/01	11/27/03 68 FR 66343	
Appendix 6(a)(5)	Vehicle Emission Repair Report Form.	8/13/98	9/30/99 64 FR 52657	
Appendix 6(a)(8)	Evaporative System Integrity (Pressure) Test.	10/11/01	11/27/03 68 FR 66343	
Appendix 6(a)(9)	Onboard Diagnostic Test Procedure OBD II Test Procedure.	10/11/01	11/27/03 68 FR 66343	
Appendix 7(a)	Emission Repair Technician Certification Process.	8/13/98	9/30/99 64 FR 52657	
Appendix 8(a)	Registration Denial System Requirements Definition.	8/13/98	9/30/99 64 FR 52657	
Appendix 9(a)	Enforcement Against Operators and Inspectors.	10/11/01	11/27/03 68 FR 66343	
Regulation 35—Conformity of General Federal Actions to the State Implementation Plans				
Section 1	Purpose	8/14/96	7/15/97 62 FR 37722	
Section 2	Definitions	8/14/96	07/15/97 62 FR 37722	
Section 3	Applicability	8/14/96	07/15/97 62 FR 37722	
Section 4	Conformity Analysis ..	8/14/96	07/15/97 62 FR 37722	

EPA-APPROVED REGULATIONS IN THE DELAWARE SIP—Continued

State citation	Title/subject	State effective date	EPA approval date	Additional explanation
Section 5	Reporting Requirements.	8/14/96	07/15/97 62 FR 37722	
Section 6	Public Participation and Consultation.	8/14/96	07/15/97 62 FR 37722	
Section 7	Frequency of Conformity Determinations.	8/14/96	07/15/97 62 FR 37722	
Section 8	Criteria for Determining Conformity of General Federal Actions.	8/14/96	07/15/97 62 FR 37722	
Section 9	Procedures for Conformity Determinations of General Federal Actions.	8/14/96	07/15/97 62 FR 37722	
Section 10	Mitigation of Air Quality Impacts.	8/14/96	07/15/97 62 FR 37722	
Section 11	Savings Provision	8/14/96	07/15/97 62 FR 37722	
Regulation 37—NO_X Budget Program				
Section 1	General Provisions ...	12/11/99	3/9/00 65 FR 12481	
Section 2	Applicability	12/11/99	3/9/00 65 FR 12481	
Section 3	Definitions	12/11/99	3/9/00 65 FR 12481	
Section 4	Allowance Allocation	12/11/99	3/9/00 65 FR 12481	
Section 5	Permits	12/11/99	3/9/00 65 FR 12481	
Section 6	Establishment of Compliance Accounts.	12/11/99	3/9/00 65 FR 12481	
. Section 7	Establishment of General Accounts.	12/11/99	3/9/00 65 FR 12481	
Section 8	Opt In Provisions	12/11/99	3/9/00 65 FR 12481	
Section 9	New Budget Source Provisions.	12/11/99	3/9/00 65 FR 12481	
Section 10	NO_X Allowance Tracking System (NATS).	12/11/99	3/9/00 65 FR 12481	
Section 11	Allowance Transfer ...	12/11/99	3/9/00 65 FR 12481	
Section 12	Allowance Banking ...	12/11/99	3/9/00 65 FR 12481	
Section 13	Emission Monitoring	12/11/99	3/9/00 65 FR 12481	

EPA-APPROVED REGULATIONS IN THE DELAWARE SIP—Continued

State citation	Title/subject	State effective date	EPA approval date	Additional explanation
Section 14	Recordkeeping	12/11/99	3/9/00 65 FR 12481	
Section 15	Emissions Reporting	12/11/99	3/9/00 65 FR 12481	
Section 16	End-of-Season Reconciliation.	12/11/99	3/9/00 65 FR 12481	
Section 17	Compliance Certification.	12/11/99	3/9/00 65 FR 12481	
Section 18	Failure to Meet Compliance Requirements.	12/11/99	3/9/00 65 FR 12481	
Section 19	Program Audit	12/11/99	3/9/00 65 FR 12481	
Section 20	Program Fees	12/11/99	3/9/00 65 FR 12481	
Appendix "A"	NO_X Budget Program	12/11/99	3/9/00 65 FR 12481	
Regulation 39—Nitrogen Oxides (NO_X) Budget Trading Program				
Section 1	Purpose	12/11/00	5/17/01 66 FR 27459	
Section 2	Emission Limitation ...	12/11/00	5/17/01 66 FR 27459	
Section 3	Applicability	12/11/00	5/17/01 66 FR 27459	
Section 4	Definitions	12/11/00	5/17/01 66 FR 27459	
Section 5	General Provisions ...	12/11/00	5/17/01 66 FR 27459	
Section 6	NO_X Authorized Account Representative for NO_X Budget Sources.	12/11/00	5/17/01 66 FR 27459	
Section 7	Permits	12/11/00	5/17/01 66 FR 27459	
Section 8	Monitoring and Reporting.	12/11/00	5/17/01 66 FR 27459	
Section 9	NATS	12/11/00	5/17/01 66 FR 27459	
Section 10	NO_X Allowance Transfers.	12/11/00	5/17/01 66 FR 27459	
Section 11	Compliance Certification.	12/11/00	5/17/01 66 FR 27459	
Section12	End-of-Season Reconciliation.	12/11/00	5/17/01 66 FR 27459	
Section 13	Failure to Meet Compliance Requirements.	12/11/00	5/17/01 66 FR 27459	

EPA-APPROVED REGULATIONS IN THE DELAWARE SIP—Continued

State citation	Title/subject	State effective date	EPA approval date	Additional explanation
Section 14	Individual Unit Opt-Ins.	12/11/00	5/17/01 66 FR 27459	
Section 15	General Accounts	12/11/00	5/17/01 66 FR 27459	
Appendix A	Allowance Allocations to NO_X Budget Units Under Section 3(a)(1)(i) and 3(a)(1)(ii) of sRegulation No. 39.	12/11/00	5/17/01 66 FR 27459	
Appendix B	Regulation No. 37—Regulation No. 39 Program Transition.	12/11/00	5/17/01 66 FR 27459	
Regulation 40—Delaware's National Low Emission Vehicle (NLEV) Regulation				
Section 1	Applicability	10/11/99	12/28/99 64 FR 72564	Issued on September 1, 1999 by Secretary's Order No. 99–A–0046.
Section 2	Definitions	10/11/99	12/28/99 64 FR 72564	
Section 3	Program Participation	10/11/99	12/28/99 64 FR 72564	
Regulation 41—Limiting Emissions of Volatile Organic Compounds From Consumer and Commercial Products				
Section 1	Architectural and Industrial Maintenance Coatings.	03/11/02	11/22/02 67 FR 70315	
Section 2	Commercial Products	01/11/02	11/22/02 67 FR 70315	
Section 3	Portable Fuel Containers.	11/11/01	11/22/02 67 FR 70315	
Regulation 42—Specific Emission Control Requirements				
Section 1	Control of (NO_X) Emissions from Nitrogen Industrial Boilers.	12/11/01	11/22/02 67 FR 70315	

(d) *EPA approved State source specific requirements.*

EPA-APPROVED REGULATIONS IN THE DELAWARE SIP

State citation	Title/subject	State effective date	EPA approval date	Additional explanation
Getty Oil Co	75–A–4	8/5/75	3/7/79 44 FR 12423	52.420(c)(11).
Phoenix Steel Co.—Electric Arc Furnaces Charging & Tapping #2.	77–Ac–8	12/2/77	7/30/79 44 FR 25223	52.420(c)(12).

EPA-APPROVED REGULATIONS IN THE DELAWARE SIP—Continued

State citation	Title/subject	State effective date	EPA approval date	Additional explanation
Delmarva Power & Light—Indian River.	89–A–7/ APC 89/197	2/15/89	1/22/90 55 FR 2067	52.420(c)(38).
SPI Polyols, Inc.	Secretary's Order No. 2000–A–0033.	07/11/00	6/14/01 66 FR 32231	Polyhydrate Alcohol's Catalyst Regenerative Process—Approved NO_X RACT Determination.
Citisteel	Secretary's Order No. 2000–A–0033.	07/11/00	6/14/01 66 FR 32231	Electric Arc Furnace—Approved NO_X RACT Determination.
General Chemical Corp.	Secretary's Order No. 2000–A–0033.	07/11/00	6/14/01 66 FR 32231	(1) Sulfuric Acid Process & Interstage Absorption System. (2) Metallic Nitrite Process—Approved NO_X RACT Determinations.

(e) *EPA-approved non-regulatory and quasi-regulatory material.*

Name of non-regulatory SIP revision	Applicable geographic area	State submittal date	EPA approval date	Additional explanation
Commitment to adopt a clean fuel fleet program.	Philadelphia-Wilmington-Trenton Ozone Nonattainment Area.	2/26/93	9/29/93 58 FR 50846	52.422 (b).
1990 Base Year Emissions Inventory.	Philadelphia-Wilmington-Trenton Ozone Nonattainment Area.	5/27/94	1/24/96 61 FR 1838	52.423 VOC, CO, NO_X.
15% Rate of Progress Plan	Philadelphia-Wilmington-Trenton Ozone Nonattainment Area.	2/17/95	10/12/99 64 FR 55139	52.426(a).
Post-1996 Rate of Progress Plan & contingency measures.	Philadelphia-Wilmington-Trenton Ozone Nonattainment Area.	12/29/97 6/17/99 2/3/00 12/20/00	10/29/01 66 FR 54598	52.426(b).
Ozone Attainment Plan Demonstration & enforceable commitments.	Philadelphia-Wilmington-Trenton Ozone Nonattainment Area.	5/22/98 10/8/98 1/24/00 12/20/00 10/9/01 9/2/03	10/29/01 66 FR 54598 12/5/03 68 FR 6794	52.426(c).
Mobile budgets	Kent & New Castle Counties	*1/5/98 *5/28/98 2/3/00 12/20/00 9/2/03	10/29/01 66 FR 54598 12/5/03 68 FR 67948	52.426(d), (e).
Photochemical Assessment Monitoring Stations (PAMS) Program.	Philadelphia-Wilmington-Trenton Ozone Nonattainment Area.	3/24/94	9/11/95 60 FR 47081	52.430.
Small Business stationary source technical and environmental compliance assistance program.	Statewide	5/16/95	5/17/94 59 FR 25771	52.460.
Commitment to establish an ambient air quality monitoring network.	Statewide	3/19/80	5/15/81 46 FR 26767	52.465(c)(15).

Name of non-regulatory SIP revision	Applicable geographic area	State submittal date	EPA approval date	Additional explanation
Commitment to use available grants and funds to provide for basic transportation needs...	New Castle County	8/15/79	9/30/81 46 FR 47777	52.465(c)(19).
Executive order pertaining to financial disclosures by State officials [CAA Section 128].	Statewide	8/7/78	9/29/81 46 FR 47544	52.465(c)(22).
Lead (Pb) SIP	Statewide	12/23/80	9/10/81 46 FR 45160	52.465(c)(24).
Procedures to notify EPA of PSD sources locating within 100 km of a Class I PSD area.	Statewide	2/27/81	3/15/82 47 FR 11014	52.465(c)(29).

* (rec'd).

[63 FR 67410, Dec. 7, 1998, as amended at 64 FR 12087, Mar. 11, 1999; 64 FR 32189, June 16, 1999; 64 FR 48963, Sept. 9, 1999; 64 FR 52659, Sept. 30, 1999; 65 FR 2051, Jan. 13, 2000; 65 FR 12483, Mar. 9, 2000; 66 FR 9211, Feb. 7, 2001; 66 FR 27462, May 17, 2001; 66 FR 32234, June 14, 2001; 67 FR 70316, Nov. 22, 2002; 69 FR 34287, June 21, 2004]

§ 52.421 Classification of regions.

The Delaware plan was evaluated on the basis of the following classifications:

Air quality control region	Pollutant				
	Particulate matter	Sulfur oxides	Nitrogen dioxide	Carbon monoxide	Photochemical oxidants (hydrocarbons)
Metropolitan Philadelphia Interstate	I	I	III	I	I
Southern Delaware Intrastate	III	III	III	III	III

[37 FR 10856, May 31, 1972, as amended at 39 FR 16345, May 8, 1974]

§ 52.422 Approval status.

(a) With the exceptions set forth in this subpart, the Administrator approves Delaware's plan for the attainment and maintenance of the national standards under section 110 of the Clean Air Act. Furthermore, the Administrator finds that the plan satisfies all requirements of part D, title 1, of the Clean Air Act as amended in 1977, except as noted below. In addition, continued satisfaction of the requirements of part D for the ozone portion of the SIP depends on the adoption and submittal of RACT requirements by July 1, 1980, for the sources covered by CTGs issued between January 1978 and January 1979 and adoption and submittal by each subsequent January of additional RACT requirements for sources covered by CTGs issued by the previous January.

(b) Letter of February 26, 1993, from the Delaware Department of Natural Resources and Environmental Control transmitting a commitment to adopt either the Federal clean fuel fleet program or an alternative substitute program by May 15, 1994.

[45 FR 14558, Mar. 6, 1980, as amended at 58 FR 50848, Sept. 29, 1993]

§ 52.423 1990 Base Year Emission Inventory.

EPA approves as a revision to the Delaware State Implementation Plan the 1990 base year emission inventories for the Delaware ozone nonattainment

areas submitted by the Secretary of the Department of Natural Resources and Environmental Control on May 27, 1994. This submittal consists of the 1990 base year point, area, non-road mobile, biogenic and on-road mobile source emission inventories in area for the following pollutants: volatile organic compounds (VOC), carbon monoxide (CO), and oxides of nitrogen (NO_X).

[61 FR 1841, Jan. 24, 1996]

§ 52.424 Conditional approval.

(a)–(d) [Reserved]

[62 FR 27197–27199, May 19, 1997, as amended at 63 FR 1368, Jan. 9, 1998; 63 FR 16435, Apr. 3, 1998; 64 FR 32189, June 16, 1999; 64 FR 52660, Sept. 30, 1999; 64 FR 55141, Oct. 12, 1999; 66 FR 9211, Feb. 7, 2001; 66 FR 32234, June 14, 2001]

§ 52.425 [Reserved]

§ 52.426 Control strategy plans for attainment and rate-of-progress: ozone.

(a) EPA fully approves, as a revision to the Delaware State Implementation Plan, the 15 Percent Rate of Progress Plan for the Delaware portion of the Philadelphia-Wilmington-Trenton severe ozone nonattainment, namely Kent and New Castle Counties, submitted by the Secretary of Delaware Department of Natural Resources and Environmental Control on February 17, 1995.

(b)(1) EPA approves revisions to the Delaware State Implementation Plan consisting of the Post 1996 ROP plans for milestone years 1999, 2002, and 2005 for the Delaware portion of the Philadelphia-Wilmington-Trenton severe ozone nonattainment area, namely Kent and New Castle Counties. These revisions were submitted by the Secretary of Delaware Department of Natural Resources and Environmental Control on December 29, 1997, and revised on June 17, 1999, February 3, 2000, and December 20, 2000.

(2) EPA approves Delaware's contingency plans for failure to meet ROP in the Delaware portion of the Philadelphia-Wilmington-Trenton severe ozone nonattainment area, namely Kent and New Castle Counties, for milestone years 1999, 2002 and 2005. These revisions were submitted by the Secretary of Delaware Department of Natural Resources and Environmental Control on December 29, 1997, June 17, 1999, February 3, 2000, and December 20, 2000.

(c) EPA approves the attainment demonstration SIP for the Philadelphia-Wilmington-Trenton area submitted by the Secretary of the Delaware Department of Natural Resources and Environmental Control on May 22, 1998, and amended October 8, 1998, January 24, 2000, December 20, 2000, and October 9, 2001 including its RACM analysis and determination. EPA is approving the enforceable commitments made to the attainment plan for the Philadelphia-Wilmington-Trenton severe ozone nonattainment area submitted by the Secretary of Delaware Department of Natural Resources and Environmental Control on January 24, 2000 and December 20, 2000. The enforceable commitments are to:

(1) Submit measures by October 31, 2001 for additional emission reductions as required in the attainment demonstration test, and to revise the SIP and motor vehicle emissions budgets by October 31, 2001 if the additional measures affect the motor vehicle emissions inventory,

(2) [Reserved]

(3) Perform a mid-course review by December 31, 2003.

(d) EPA is approving the following mobile budgets, explicitly quantified as sub-budgets for each of Kent and New Castle Counties, of the Post 1996 ROP Plans and the 1–Hour Ozone Attainment Demonstration Plan:

TRANSPORTATION CONFORMITY EMISSION BUDGETS FOR THE DELAWARE PORTION OF THE PHILADELPHIA AREA

Type of control strategy SIP	Year	Kent County		New Castle County		Effective date of adequacy determination or SIP approval
		VOC	NO_X	VOC	NO_X	
Post-1996 ROP Plan	1999	7.55	11.17	22.49	29.41	April 29, 1999, (64 FR 31217, published June 10, 1999).
Post-1996 ROP Plan	2002	6.30	9.81	18.44	27.29	June 23, 2000, (65 FR 36440, published June 8, 2000).

TRANSPORTATION CONFORMITY EMISSION BUDGETS FOR THE DELAWARE PORTION OF THE PHILADELPHIA AREA—Continued

Type of control strategy SIP	Year	Kent County		New Castle County		Effective date of adequacy determination or SIP approval
		VOC	NO_X	VOC	NO_X	
Post-1996 ROP Plan	2005	4.84	7.90	14.76	22.92	May 2, 2001, (66 FR 19769, published April 17, 2001).
Attainment Demonstration	2005	5.14	8.42	15.08	21.28	SIP approval on December 5, 2003; Effective on February 3, 2004.

§ (1)–(2) [Reserved]

(e) EPA approves Delaware's revised 2005 VOC and NO_X motor vehicle emission budgets for the 1-hour ozone attainment plan for the Delaware portion of the Philadelphia-Wilmington-Trenton severe ozone nonattainment area as a SIP revision. The revisions were submitted by the Delaware Department of Natural Resources and Environmental Control on September 2, 2003. Submittal of these revised MOBILE6-based motor vehicle emissions budgets was a requirement of EPA's approval of the attainment demonstration under paragraph (c) of this section.

[64 FR 55141, Oct. 12, 1999, as amended at 66 FR 54614, Oct. 29, 2001; 68 FR 67952, Dec. 5, 2003]

§§ 52.427–52.429 [Reserved]

§ 52.430 Photochemical Assessment Monitoring Stations (PAMS) Program.

On March 24, 1994 the Delaware Department of Natural Resources & Environmental Control submitted a plan for the establishment and implementation of a Photochemical Assessment Monitoring Stations (PAMS) Program as a state implementation plan (SIP) revision, as required by section 182(c)(1) of the Clean Air Act. EPA approved the Photochemical Assessment Monitoring Stations (PAMS) Program on September 11, 1995 and made it part of the Delaware SIP. As with all components of the SIP, Delaware must implement the program as submitted and approved by EPA.

[60 FR 47084, Sept. 11, 1995]

§ 52.431 [Reserved]

§ 52.432 Significant deterioration of air quality.

(a) The requirements of sections 160 through 165 of the Clean Air Act are not met, since the plan does not include approvable procedures for preventing the significant deterioration of air quality.

(b) Regulation for preventing significant deterioration of air quality. The provisions of § 52.21(l)(2) and (p) are hereby incorporated and made a part of the applicable State plan for the State of Delaware.

(c) Pursuant to 40 CFR 52.21(u) full delegation of authority for all portions

of the Federal PSD program, as described in 40 CFR 52.21, was relinquished to the State of Delaware as of June 15, 1981. All applications submitted as of that date and supporting information required pursuant to § 52.21 from sources located in the State of Delaware shall be submitted to: Delaware Department of Natural Resources and Environmental Control, Air Resources Section, Division of Environmental Control, Edward Tatnall Building, P.O. Box 1401, Dover, Delaware 19901.

[45 FR 52741, Aug. 7, 1980, and 46 FR 31262, June 15, 1981, as amended at 47 FR 11014, Mar. 15, 1982]

§ 52.433 Requirements for state implementation plan revisions relating to new motor vehicles.

Delaware must comply with the requirements of § 51.120.

[60 FR 4737, Jan. 24, 1995]

§ 52.460 Small business stationary source technical and environmental compliance assistance program.

(a) On January 11, 1993, the Director of the Delaware Department of Natural Resources and Environmental Control submitted a plan for the establishment and implementation of a Small Business Stationary Source Technical and Environmental Compliance Assistance Program as a State Implementation Plan revision, as required by title V of the Clean Air Act. EPA approved the Small Business Stationary Source Technical and Environmental Compliance Assistance Program on May 17, 1994, and made it a part of the Delaware SIP. As with all components of the SIP, Delaware must implement the program as submitted and approved by EPA.

[59 FR 25572, May 17, 1994]

§ 52.465 Original identification of plan section.

(a) This section identifies the original "Air Implementation Plan for the State of Delaware" and all revisions submitted by Delaware that were federally approved prior to July 1, 1998.

(b) The plan was officially submitted on January 28, 1972.

(c) The plan revisions listed below were submitted on the dates specified.

(1) Certification that public hearing was held on plan submitted on February 11, 1972, by the Department of Natural Resources and Environmental Control.

(2) Information on the geometric standard deviations of air quality data submitted on March 7, 1972, by the Department of Natural Resources and Environmental Control.

(3) Miscellaneous non-regulatory clarifications and amendments to the plan submitted on May 5, 1972, by the Department of Natural Resources and Environmental Control.

(4) Specification of attainment dates submitted on June 2, 1972, by the Department of Natural Resources and Environmental Control.

(5) Periodic stack sampling requirements submitted on June 5, 1972, by the Department of Natural Resources and Environmental Control.

(6) Miscellaneous non-regulatory additions to the plan submitted on July 20, 1972, by the Delaware Water and Air Resource Commission.

(7) Backup information for the attainment of the Secondary SO_2 standards in New Castle County submitted on November 14, 1972, by the Department of Natural Resources and Environmental Control.

(8) Backup information for the attainment of the Secondary SO_2 standards in New Castle County submitted on December 19, 1972, by the Department of Natural Resources and Environmental Control.

(9) Amendments to Regulations I through XIV inclusive of the Delaware Regulations Governing Air Pollution, and Amendments to the Delaware Environmental Protection Act; submitted on January 16, 1975 by the Delaware Department of Natural Resources and Environmental Control.

(10) Amendments to Section V (Surveillance) of the Delaware State Implementation Plan and amendments to Section V (Surveillance) of the New Castle County Portion of the Delaware State Implementation Plan, covering changes to the air pollution monitoring system; submitted on September 3, 1975 by the Delaware Department of

Natural Resources and Environmental Control.

(11) A Consent Order for the Getty Oil Company and the Delmarva Power and Light Company submitted on August 5, 1975 by the Delaware Department of Natural Resources and Environmental Control.

(12) Amendments to Regulations No. V, XIV, XVII, and a newly adopted Regulation No. XXIII (Standards of Performance for Steel Plants: Electric Arc Furnaces); and a Court of Chancery injunction to control charging and tapping emissions for the Phoenix Steel Corporation's plant in Claymont, Delaware submitted on December 2, 1977 and October 5, 1978, respectively, by the Department of Natural Resources and Environmental Control.

(13) On May 3, 1979, the Governor submitted the nonattainment area plan for New Castle County with respect to ozone.

(14) A revision submitted by the State of Delaware on October 5, 1978 to eliminate certain outdated requirements relating to Regulations V and XVIII and correction of typographical errors relating to Regulations III, VIII, and XV.

(15) A revision submitted by the State of Delaware on March 19, 1980 which is intended to establish an Ambient Air Quality Monitoring Network.

(16) Revisions to Delaware's Regulations I, II, III, IV, VIII, XII, XIV, XV, and XVII submitted by the Delaware Department of Natural Resources and Environmental Control on March 19, 1980.

(17) A revision submitted by the State of Delaware on September 7, 1977, consisting of an amendment to Delaware Regulations Governing Air Pollution, Regulation XVII, establishing continuous emission monitoring regulations.

(18) A revision submitted by the District of Columbia on May 16, 1979 which is intended to establish an Ambient Air Quality Monitoring Network.

(19) A commitment to use available grants and funds to establish, expand, and improve public transportation to meet basic transportation needs, submitted on August 15, 1979 by the Delaware Transportation Authority.

(20) A revised schedule for implementation of Delaware's inspection and maintenance program submitted by September 10, 1980 by the Secretary, Delaware Department of Natural Resources and Environmental Control.

(21) [Reserved]

(22) A revision submitted by the State of Delaware on August 7, 1978 consisting of two Executive Orders for financial disclosure of certain State officials.

(23) Amendments to Regulations I (Definitions) and XXIV (Control of Organic Compounds Emissions) submitted on December 23, 1980 by the Secretary, Delaware Department of Natural Resources and Environmental Control.

(24) A State Implementation Plan for the Control of lead emissions submitted on December 23, 1980 by the Secretary, Delaware Department of Natural Resources and Environmental Control.

(25) A revised schedule for implementation of Delaware's inspection and maintenance program submitted on December 29, 1980 by the Secretary, Delaware Department of Natural Resources and Environmental Control.

(26) Amendments to Regulation II (Registration and Permits) and XIII (Open Burning) [non-regulatory] of the Delaware Regulations governing the Control of Air Pollution submitted on September 22, 1981 by the Secretary, Department of Natural Resources and Environmental Control.

(27) Amendments to Section 9.4 (Surface Coating operations) and 13.2 (Dry Cleaning) of Regulation XXIV (Control of Volatile Organic Compound Emissions) of the Delaware Regulations governing the Control of Air Pollution submitted on September 22, 1981 by the Secretary, Department of Natural Resources and Environmental Control.

(28) Amendments to Regulations I (Definitions) and XXV Section (Requirements for Preconstruction Review) pertaining to prevention of significant deterioration submitted on December 29, 1980 by the Secretary, Delaware Department of Natural Resources and Environmental Control.

(29) A February 27, 1981 letter from the Delaware Department of Natural Resources and Environmental Control

to EPA pertaining to procedures of notifying EPA of any PSD application for sources locating within 100 kilometers of a Class I PSD area, as well as ensuring EPA in any monitoring procedure, that the requirements of 40 CFR part 58 will be specified.

(30) A revision submitted by the State of Delaware on October 14, 1982, consisting of amendments to Regulation No. II—Permits.

(31) Plan Revision providing for attainment of the Ozone standard submitted by *John E. Wilson, III* to EPA on July 6, 1982.

(32) Stack height regulation, public notification plan, and other miscellaneous revisions submitted to EPA on April 20, 1983.

(33) A revision submitted by the State of Delaware on September 26, 1983 consisting of amendments to Section 2.3 of Regulation Number XIV, Section 2.3 of Regulation Number VII, and Section 9.7 and Table I(a) to Regulation Number XXIV of the DelawareRegulations Governing the Control of Air Pollution.

(34) Revisions to the Delaware Regulations Governing the Control of Air Pollution were submitted by the Secretary on August 8, 1984.

(i) Incorporation by reference. (A) Amendments to Regulations II (Permits); XIII (Open Burning); XIV (Visible Emissions); and XVII (Source Monitoring, Record Keeping and Reporting).

(35) Revisions submitted by the State of Delaware on June 5, 1985 amending the State of Delaware Regulations Governing the Control of Air Pollution, Regulation Nos. VIII, XIII, and XXVI.

(i) Incorporation by reference. (A) Revisions via Order No. 85–A–3 Exhibit A Amendment Nos. 2, 3, and 5, to the State of Delaware Regulations Governing the Control of Air Pollution, Regulations VIII sections 2.1–2.4, XIII section 1.2, and XXVI Table 2, pertaining to sulfur in fuel oil, open burning, and motor vehicle emission testing, respectively. These revisions were adopted by the Department of Natural Resources and Environmental Control on May 9, 1985.

(ii) Additional information. (A) A letter dated July 9, 1985 from Secretary John E. Wilson, III to Mr. James M. Seif, withdrawing certain portions of the original SIP revision request pertaining to asbestos, New Source Performance Standards (Regulation No. XX), and Emission Standards for Hazardous Air Pollutants (Regulation No. XXI).

(B) A letter dated July 9, 1986 from Mr. Robert R. French to Mr. James Sydnor withdrawing the request to delete the definitions of "Reconstruction" and "Capital Expenditure" from their new source review regulations (Regulations I and XXV).

(36) [Reserved]

(37) Revision submitted by the State of Delaware on March 6, 1987, consisting of amendment to Regulation II-Permits.

(i) Incorporation by reference. State of Delaware Order No. 87–A–2 (Introduction, Findings of Fad and (1) of the order which amends section 2.7 of Regulation II) which was issued on February 18, 1987.

(38) Revision to the Delaware State Implementation Plan incorporation of a Conciliatory Order, was submitted on May 31, 1989. The order is designed to reduce ambient sulfur dioxide levels around the Delmarva Power and Light Company's Indian River power plant.

(i) Incorporation by reference.

(A) Letter dated May 31, 1989 from the State of Delaware containing the Conciliatory Order for incorporation into the Delaware State Implementation Plan.

(B) Conciliatory Order issued on May 31, 1989, for Delmarva Power and Light Company's Indian River power plant.

(39) Revisions to the State Implementation Plan were submitted by the Delaware Department of Natural Resources and Environmental Control on March 6, 1987 (Secretary's Order No. 87–A–2). Revisions to the State Implementation Plan submitted by the Delaware Department of Natural Resources and Environmental Control on March 21, 1988 (Secretary's Order No. 89–A–5).

(i) Incorporation by reference.

(A) Letter received on March 6, 1987, from the Delaware Department of Natural Resources and Environmental Control submitting revisions to the State Implementation Plan for EPA approval (portions of Secretary Order No. 87–A–2).

(B) Letter dated December 21, 1988, from the Delaware Department of Natural Resources and Environmental Control submitting revisions to the State Implementation Plan for EPA approval (portions of Secretary Order No. 89–A–5).

(C) Only those portions of Secretary's Order No. 87–A–2 issued on February 18, 1987, which amend Regulation No. II, Stack Heights at sections 2.2, 2.3, 2.4, and 2.5, pertaining to the definitions of the terms excessive concentrations, nearby stack, and stack in existence; and at sections 3.1, 3.2, and 3.3, pertaining to the requirements for new and existing sources.

(D) Only those portions of Secretary's Order No. 89–A–5, issued on December 7, 1988, which amend Regulation No. XXV, Requirements for Preconstruction Review, at section 3.9(A) and Regulation No. XXVII, Stack Heights at section 2 to include definitions of the terms emission limitation and emission standard.

(40) [Reserved]

(41) Revision submitted by the State of Delaware on April 28, 1988 amending the hydrocarbon motor vehicle emission testing standards in Regulation XXVI of the Delaware *Regulations Governing the Control of Air Pollution*.

(i) Incorporation by reference. (A) Revisions via Order 88–A–2, exhibit A, parts A and B, which is an amendment to Table 2 of Technical Memorandum Number 2 entitled "Motor Vehicle Inspection and Maintenance Program Emission Limit Determination". This revision was issued by the State on December 29, 1987.

(42) Revisions to the State Implementation Plan submitted by the Delaware Department of Natural Resources and Environmental Control on December 12, 1985, pertaining to Delaware Regulation No. XXIV which includes an alternative RACT standard for the zinc-rich weld-through primer coating.

(i) Incorporation by reference.

(A) Letter from the Delaware Department of Natural Resources and Environmental Control dated December 12, 1985 submitting a revision to the Delaware State Implementation Plan, regarding changes to Regulation No. XXIV to remove the word "yearly" from Tables I and I(a) and to propose an alternative RACT standard for the zinc-rich primer coating.

(B) Those portions of Exhibit 13 of Order No. 85–A–5 amending Regulation No. XXIV by 1) deleting the word "yearly" in Tables I and I(a) and (2) adopting 4.0 as the Reasonably Available Control Technology (RACT) emission limit for Zinc-rich Primer used in automobile surface coating.

(ii) Additional materials.

(A) Remainder of the State submittal.

(43) Revision to the State Implementation Plan submitted by the Delaware Department of Natural Resources and Environmental Control on March 6, 1990, amending portions of Regulation XXVI (26) of the Delaware *Regulations Governing the Control of Air Pollution* by expanding the I/M program statewide, adopting CO cutpoints statewide, modifying the test procedures, and increasing the waiver cost repair limit.

(i) Incorporation by reference.

(A) Letter from the Delaware Department of Natural Resources and Environmental Control dated March 6, 1990 submitting a revision to the Delaware State Implementation Plan.

(B) Sections 1, 2, 4 and 6 of Regulation XXVI (26), Motor Vehicle Emissions Inspection Program, of the Delaware *Regulations Governing the Control of Air Pollution* and the two (2) Technical Memoranda, Numbers 1 and 2, which are appendices to Regulation XXVI (26), of the Delaware *Regulations Governing the Control of Air Pollution*.

(ii) Additional materials—remainder of State submittal.

(44) Revisions to the State Implementation Plan submitted by the Delaware Department of Natural Resources and Environmental Control on July 6, 1990.

(i) Incorporation by reference.

(A) A letter from the Delaware Department of Natural Resources and Environmental Control dated July 6, 1990 submitting a revision to the Delaware State Implementation Plan, effective July 3, 1990.

(B) Regulation 1—Definitions and Administrative Principles.

(C) Regulation 24—Section 1, General Provisions; section 6, Bulk Gasoline Plants; section 8, Petroleum Liquid

Storage; section 9, Surface Coating Operations; section 14, Petroleum Refinery Component Leaks; and section 15, Rotogravure and Flexographic Printing.

(45) Revisions to the State Implementation Plan submitted by the Delaware Department of Natural Resources and Environmental Control on March 9, 1990.

(i) Incorporation by reference.

(A) Letter from the Delaware Department of Natural Resources and Environmental Control dated March 6, 1990, submitting a revision to the Delaware State Implementation Plan.

(B) The portion of Secretary Order 90–A–1 that amends Regulation II—Permits—Section 3.1.b.1; and Regulation XXV—Requirements for Preconstruction Review—Sections 1.9 (N) 1–4, 3.1, and 3.9. The amendments to Regulation II and Regulation XXV were adopted on January 31, 1990, and were effective on May 15, 1990, in the state of Delaware.

(46) Revisions to the Delaware State Implementation Plan submitted on January 11, 1993 by the Delaware Department of Natural Resources & Environmental Control:

(i) Incorporation by reference. (A) Letter of January 11, 1993 from the Delaware Department of Natural Resources & Environmental Control transmitting Regulation 24—"Control of Volatile Organic Compound Emissions", effective January 11, 1993.

(B) Regulation 24—"Control of Volatile Organic Compound Emissions", Sections 1, 2, 3, 4, 5, 6, 7, 8, 9, 13, 14, 15, 16, 17, 18, 19, 20, 21, 22, 23, 24, 25, 26, 27, 28, 29, 30, 31, 32, 33, 34, 35, 37, 38, 39, 40, 41, 42, and Appendices A, B, C, D, E, F, G, & H.

(47) Revisions to the Delaware regulations for particulate matter (PM–10) submitted on April 26, 1988 by the Delaware Department of Natural Resources and Environmental Control:

(i) Incorporation by reference. (A) Letter of April 26, 1988 from the Department of Natural Resources and Environmental Control transmitting a revision to the Delaware State implementation plan for particulate matter (PM–10) Group III areas.

(B) Revisions via Order No. 88–A–5, exhibit A, and Table 1. The Order amends the following Delaware Regulations Governing the Control of Air Pollution: Regulation 1—"Definitions and Administrative Principles"; Regulation 3—"Ambient Air Quality Standards"; Regulation 15—"Air Pollution Alert and Emergency Plan"; and Regulation 25—"Requirements for Preconstruction Review". The revisions were adopted on March 29, 1988 and became effective immediately.

(ii) Additional materials.

(A) Remainder of the State implementation plan revision submitted by the Delaware Department of Natural Resources and Environmental Control on April 26, 1988.

(48) Revisions to the Delaware State Implementation Plan submitted on January 20, 1994 by the Delaware Department of Natural Resources & Environmental Control:

(i) Incorporation by reference.

(A) Letter of January 20, 1994 from the Delaware Department of Natural Resources & Environmental Control transmitting Regulation 24—Control of Volatile Organic Compound Emissions—Sections 50(a)(5) and 50(b)(3), effective November 24, 1993.

(B) Regulation 24—Control of Volatile Organic Compound Emissions, Section 50—Other Facilities that Emit Volatile Organic Compounds—Sections 50(a)(5) and 50(b)(3)—Non-CTG RACT, effective November 24, 1993.

(ii) Additional material.

(A) Remainder of January 20, 1994 State submittal pertaining to Regulation 24, sections 50(a)(5) and 50(b)(30) referenced in paragraph (c)(48)(i) of this section.

(49) Revisions to the Delaware State Implementation Plan submitted on February 17, 1995 by the Delaware Department of Natural Resources & Environmental Control:

(i) Incorporation by reference.

(A) Letter of February 17, 1995 from the Delaware Department of Natural Resources & Environmental Control transmitting Regulation 13—Open Burning, effective February 8, 1995.

(B) Regulation 13—Open Burning, effective February 8, 1995.

(C) Administrative changes to Regulation 1, Definitions and Administrative Principles: addition of the following definitions: "ceremonial fires",

"conservation practices", "prescribed burning", and "silviculture"; and revision to the following definitions: "open burning", "rubbish", and "trade waste" adopted February 8, 1995.

(ii) Additional material.

(A) Remainder of the February 17, 1995 State submittal pertaining to Regulation 13—Opening Burning referenced in paragraph (c)(49)(i) of this section.

(50) Revisions to the Delaware State Implementation Plan submitted on January 11, 1993, by the Delaware Department of Natural Resources & Environmental Control:

(i) Incorporation by reference.

(A) Letter of January 11, 1993, from the Delaware Department of Natural Resources & Environmental Control submitting and requesting approval of Stage II Vapor Recovery Regulations for Gasoline Dispensing Facilities.

(B) Addition of Section 36–Stage II Vapor Recovery and Appendix J–Procedures for Implementation of Regulations Covering Stage II Vapor Recovery Systems for Gasoline Dispensing Facilities to Regulation No. 24, "Control of Volatile Organic Compound Emissions." Section 36 and Appendix J have an effective date of January 11, 1993.

(ii) Additional materials.

(A) Delaware Secretary's Order No. 93–00078, issued January 11, 1993, adopting Stage II Vapor Recovery Regulations in the State.

(B) Remainder of the January 11, 1993, State submittal pertaining to Section 36 and Appendix J of Regulation No. 24, Stage II Vapor Recovery at Gasoline Dispensing Facilities.

(51) Revisions to the Delaware State Implementation Plan submitted on January 20, 1994 by the Delaware Department of Natural Resources & Environmental Control:

(i) Incorporation by reference. (A) Letter dated January 20, 1994, from the Delaware DNREC transmitting an amendment to Regulation 24, "Control of Volatile Organic Compound Emissions", Section 43—"Other Facilities that Emit VOCs", effective November 24, 1993.

(B) Amendment to Regulation 24, "Control of VOC Emissions", Section 43—"Other Facilities that Emit VOCs", Sections 43(a)(1), 43(a)(2), 43(a)(3), 43(a)(4), 43(b)(1), 43(b)(2), 43(c), 43(d), 43(e), and 43(f).

(ii) Additional Material. (A) Remainder of January 11, 1993 and January 20, 1994 State submittal pertaining to Regulation 24 referenced in paragraphs (c)(46)(i) and (c)(51)(i) of this section.

(iii) Additional Information. (A) These rules supersede paragraph (c)(44)(i)(C) of this section.

(52) Revisions to the Delaware State Implementation Plan submitted by the Secretary, Delaware Department of Natural Resources and Environmental Control, on January 11, 1993.

(i) Incorporation by reference.

(A) Letter dated January 11, 1993 from the Secretary, Delaware Department of Natural Resources and Environmental Control, submitting a revision to the Delaware State Implementation Plan.

(B) Amended section 2, Regulation 1 (Definitions and Administrative Principles). Amended section 1, and added new section 7 of Regulation 17 (Source Monitoring, Recordkeeping and Reporting). The amendments to Regulations 1 and 17, and the addition of section 7 of Regulation 17, were effective on January 11, 1993. This revision consists of an emission statement program for stationary sources which emit volatile organic compounds (VOC) and/or nitrogen oxides (NO_X) at or above specified actual emission threshold levels. This program is applicable state-wide.

(ii) Additional material.

(A) Remainder of January 11, 1993 state submittal pertaining to Delaware Emission Statement Program.

(53) Revisions to the Delaware Regulations on the control of volatile organic compound emissions from marine vessel transfer operations submitted on August 26, 1994 by the Delaware Department of Natural Resources & Environmental Control:

(i) Incorporation by reference.

(A) Letter of August 26, 1994 from the Delaware Department of Natural Resources & Environmental Control transmitting Regulation 24, "Control of Volatile Organic Compound Emissions", by renumbering existing Section 43, "Other Facilities that Emit Volatile Organic Compounds," to Section 50 and adding a new Section 43,

"Bulk Gasoline Marine Tank Vessel Loading Facilities".

(B) Administrative changes to Section 50: renumbering existing Section 43 to Section 50, and Section 50(a)(1): renumbering 42 to 43; and the new Section 43, effective August 26, 1994.

(ii) Additional material.

(A) Remainder of August 26, 1994 State submittal pertaining to Regulation 24 referenced in paragraph (c)(53)(i) of this section.

(54) Revisions to the Delaware State Implementation Plan submitted on December 19, 1994 by the Delaware Department of Natural Resources & Environmental Control:

(i) Incorporation by reference.

(A) Letter of December 19, 1994 from the Delaware Department of Natural Resources & Environmental Control transmitting Regulation 24—"Control of Volatile Organic Compound Emissions", effective November 29, 1994.

(B) Regulation 24—"Control of Volatile Organic Compound Emissions", Sections 10, 11, 12, 44, 45, 48, and 49 and appendices I, K, L, and M, effective November 29, 1994.

(C) Administrative changes to Regulation 24, Section 2—Definitions: Addition of sections 2(c) Basecoat; 2(j) Clearcoat; 2(x) Gloss flattener; 2(bb) Internal Floating Roof; 2(gg) Liquid-mounted seal; 2(ss) Petroleum; 2(tt) Petroleum Liquid; 2(xx) Primer; 2(jjj) Storage Vessel; 2(mmm) Transfer efficiency; 2(ppp) Vapor-mounted seal; and 2(ttt) Volatile Organic Liquid (VOL); and section 2(zz) by changing ASTM D323–89 to ASTM D323–82, effective November 29, 1994.

(D) An Errata sheet of Regulation 24 with administrative changes to Section 4—4(b) by renumbering section 13 to 10 and section 22 to 23, 4(b)(1)(iii) by renumbering section 13 to 10 and section 22 to 23, 4(c) by renumbering section 22 to 23, 4(d) by renumbering section 22 to 23, 4(e) by renumbering section 13 to 10 and section 22 to 23, 4(e)(2)(iv) by adding the following lines: section 10(e)(1)(iii), section 11(d), section 12(e)(1)(iii), and section 23(e)(1)(iii), 4(e)(x) correcting 50 degrees F to 82 degrees F; Section 8—8(a)(2) by renumbering section 13 to 10; Section 21—21(a)(5) correcting the number 4 to 5; Section 25—25(c)(4)(vi) by changing *calibrated* to calculated; Section 29—29(i)(3)(i)(A) by correcting 0.09 to 0.044 in Hg, 29(i)(3)(i)(B) by correcting 0.09 to 0.044 in Hg; Section 30—30(b) by deleting definitions of *liquid mounted seal and vapor mounted seal* that were added in Section 2—Definitions; Section 31—31(b) by deleting definition of *internal floating roof* that was added to Section 2—Definitions, 31(e)(*ii*) by correcting letter *i* to *ii*; Section 33—33(f)(3) by correcting (c)(3)(*i*)(B) to (c)(3)(ii)(B), Section 35—35(c)(2)(i) by adding *weight,* 35(c)(3)(i) by adding *by weight*; Section 37—37(a)(1) by deleting *of press ready ink*; Section 43—43(a)(1) by renumbering section 13 to 10 and section 42 to 49; Appendix A—(a) by renumbering section 13(c)(1) or section 14 through 43 to section 19 through 50; Appendix D—(a)(2)(iii)(4) by deleting *to be published,* effective November 29, 1994.

(ii) Additional Material.

(A) Remainder of December 19, 1994 State submittal pertaining to Regulation 24 referenced in paragraphs (c)(54)(i).

(55) Revisions to the Delaware Regulations, Regulation 24, Section 47—Offset Lithographic Printing submitted on December 19, 1994 by the Delaware Department of Natural Resources & Environmental Control (DNREC):

(i) Incorporation by reference.

(A) Letter of December 19, 1994 from the Delaware DNREC transmitting Regulation 24, Section 47—Offset Lithographic Printing, effective November 29, 1994.

(B) Regulation 24, Section 47—Offset Lithographic Printing, effective November 29, 1994.

(ii) Additional material from Delaware's December 19, 1994 submittal pertaining to Section 47 of Regulation 24.

(56)–(57) [Reserved]

(58) Revisions to the Delaware State Implementation Plan on October 2, 1996 by the Delaware Department of Natural Resources & Environmental Control:

(i) Incorporation by reference.

(A) A letter of October 2, 1996 from the Delaware Department of Natural Resources & Environmental Control transmitting the General Conformity Rule.

(B) Delaware Regulation 35—Conformity of General Federal Actions to

the State Implementation Plans (General Conformity), effective August 14, 1996.

(ii) Additional material from the Delaware's October 2, 1996 submittal pertaining to Regulation 35.

[37 FR 10856, May 31, 1972. Redesignated at 63 FR 67410, Dec. 7, 1998]

EDITORIAL NOTE: For FEDERAL REGISTER citations affecting § 52.465, see the List of CFR Sections Affected, which appears in the Finding Aids section of the printed volume and on GPO Access.

Subpart J—District of Columbia

§ 52.470 Identification of plan.

(a) *Purpose and scope.* This section sets forth the applicable State implementation plan for the District of Columbia under section 110 of the Clean Air Act (42 U.S.C. 7401) and 40 CFR part 51 to meet national ambient air quality standards.

(b) *Incorporation by reference.* (1) Material listed in paragraphs (c) and (d) of this section with an EPA approval date prior to July 1, 1998 was approved for incorporation by reference by the Director of the Federal Register in accordance with 5 U.S.C. 552(a) and 1 CFR part 51. Material is incorporated as it exists on the date of the approval, and notice of any change in the material will be published in the FEDERAL REGISTER. Entries in paragraphs (c) and (d) of this section with EPA approval dates after July 1, 1998, will be incorporated by reference in the next update to the SIP compilation.

(2) EPA Region 3 certifies that the rules/regulations provided by EPA in the SIP compilation at the addresses in paragraph (b)(3) of this section are an exact duplicate of the officially promulgated State rules/regulations which have been approved as part of the State implementation plan as of July 1, 1998.

(3) Copies of the materials incorporated by reference may be inspected at the Region 3 EPA Office at 1650 Arch Street, Philadelphia, PA 19103; at EPA, Air and Radiation Docket and Information Center, Air Docket (6102), 401 M St., SW., Washington, DC 20460; or at the National Archives and Records Administration (NARA). For information on the availability of this material at NARA, call 202–741–6030, or go to: *http://www.archives.gov/federal_register/code_of_federal_regulations/ibr_locations.html.*

(c) *EPA approved regulations.*

EPA-APPROVED DISTRICT OF COLUMBIA REGULATIONS

State citation	Title/subject	State effective date	EPA approval date	Comments
	Chapter 1—General			
Section 100 ..	Purpose, Scope and Construction	3/15/85	8/28/95, 60 FR 44431	
Section 101 ..	Inspection	3/15/85	8/28/95, 60 FR 44431	
Section 102 ..	Orders for Compliance	3/15/85	8/28/95, 60 FR 44431	
Section 104 ..	Hearings	3/15/85	8/28/95, 60 FR 44431	
Section 105 ..	Penalty	3/15/85	8/28/95, 60 FR 44431	
Section 106 ..	Confidentiality of Reports	3/15/85	8/28/95, 60 FR 44431	
Section 107 ..	Control Devices or Practices	3/15/85	8/28/95, 60 FR 44431	
Section 199 ..	Definitions and Abbreviations	4/29/97	12/7/99 64 FR 68295	Definitions of the terms actual emissions, allowable emissions, begin actual construction, commence, complete, major modification, major stationary source, necessary preconstruction approvals, net emissions increase, new source, potential to emit, shutdown, and significant.

EPA-APPROVED DISTRICT OF COLUMBIA REGULATIONS—Continued

State citation	Title/subject	State effective date	EPA approval date	Comments
Section 199 ..	Definitions and Abbreviations	12/8/00	May 9, 2001 66 FR 23614	Addition of the definition of the word "carrier" to subsection 199.1.
Section 8–2: 702.	Definitions; definition of "stack"	7/7/72	9/22/72, 37 FR 19806	
Section 8–2: 724.	Variances	7/7/72	9/22/72, 37 FR 19806	
Chapter 2—General and Non-Attainment Area Permits				
Section 200 ..	General Permit Requirements	4/29/97	7/31/97, 62 FR 40937	
Section 201 ..	General Requirements for Permit Issuance	4/29/97	7/31/97, 62 FR 40937	
Section 202 ..	Modification, Revocation and Termination of Permits.	4/29/97	7/31/97, 62 FR 40937	
Section 204 ..	Requirements for Sources Affecting Nonattainment Areas.	4/29/97	7/31/97, 62 FR 40937	
Section 206 ..	Notice and Comment Prior To Permit Issuance	4/29/97	7/31/97, 62 FR 40937	
Section 299 ..	Definitions and Abbreviations	4/29/97	7/31/97, 62 FR 40937	Paragraphs (c) through (i), as they apply to operating permits for sources not subject to the provisions of Section 204
Section 8–2: 720.	Permits to Construct or Modify; Permits to Operate.	7/7/72	9/22/72, 37 FR 19806	
Chapter 4—Ambient Monitoring, Emergency Procedures, Chemical Accident Prevention and Conformity				
Section 400 ..	Air Pollution Monitoring	3/15/85	8/28/95, 60 FR 44431	
Section 403 ..	Determining Conformity of Federal Actions to State or Federal Implementation Plans.	11/6/98	6/5/03, 68 FR 33639	
Section 401 ..	Emergency Procedures	3/15/85	8/28/95, 60 FR 44431	
Section 499 ..	Definitions and Abbreviations	3/15/85	8/28/95, 60 FR 44431	
Chapter 5—Source Monitoring and Testing				
Sections 500.1 through 500.3.	Records, Reports and Monitoring Devices	3/15/85	8/28/95, 60 FR 44431	
Sections 500.4, 500.5.	Records, Reports, and Monitoring Devices	9/30/93	1/26/95, 60 FR 5134	
Section 500.6	Records and Reports	09/30/93	10/27/99 64 FR 57780	
Section 500.7	Emission Statements	9/30/93	5/26/95, 60 FR 27944	
Section 501 ..	Monitoring Devices	3/15/85	8/28/95, 60 FR 44431	
Sections 502.1 through 502.15.	Sampling, Tests and Measurements	3/15/85	8/28/95, 60 FR 44431	Exceptions: Paragraphs 5.11, 5.12 and 5.14 are not part of the SIP
Section 502.17.	Sampling Tests, and Measurements	09/30/93	10/27/99 64 FR 57780	
Section 502.18.	Sampling Tests and Measurements	12/8/00	May 9, 2001 66 FR 23614	Provision is amended by adding an oxygenated gasoline sampling procedure and oxygen content calculation.
Section 599 ..	Definitions and Abbreviations	09/30/93	10/27/99 64 FR 57780	
Chapter 6—Particulates				
Section 600 ..	Fuel-Burning Particulate Emissions	3/15/85	8/28/95, 60 FR 44431	
Section 601 ..	Rotary Cup Burners	3/15/85	8/28/95, 60 FR 44431	
Section 602 ..	Incinerators	3/15/85	8/28/95, 60 FR 44431	

EPA-APPROVED DISTRICT OF COLUMBIA REGULATIONS—Continued

State citation	Title/subject	State effective date	EPA approval date	Comments
Section 603 ..	Particulate Process Emissions	3/15/85	8/28/95, 60 FR 44431	
Section 604 ..	Open Burning	3/15/85	8/28/95, 60 FR 44431	
Section 605 ..	Control of Fugitive Dust	3/15/85	8/28/95, 60 FR 44431	
Section 606 ..	Visible Emissions	3/15/85	8/28/95, 60 FR 44431	
Section 699 ..	Definitions and Abbreviations	3/15/85	8/28/95, 60 FR 44431	
Chapter 7—Volatile Organic Compounds				
Section 700 ..	Organic Solvents	03/15/85	10/27/99 64 FR 57780	
Section 701.1 through 701.3.	Storage of Petroleum Products	03/15/85	10/27/99 64 FR 57780	
Section 702 ..	Control of VOC leaks from Petroleum Refinery Equipment.	03/15/85	10/27/99 64 FR 57780	
Section 703.2, 703.3.	Terminal Vapor Recovery—Gasoline or VOCs	03/15/85	10/27/99 64 FR 57780	
Section 703.1, 703.4 through 703.7.	Terminal Vapor Recovery—Gasoline or VOCs	09/30/93	10/27/99 64 FR 57780	
Section 704 ..	Stage I—Vapor Recovery	03/15/85	10/27/99 64 FR 57780	
Section 705.4 through 705.14.	Stage II—Gasoline Vapor Recovery	03/15/85	10/27/99 64 FR 57780	
Section 705.1 through 705.3.	Stage II—Gasoline Vapor Recovery	09/30/93	10/27/99 64 FR 57780	
Section 706 ..	Petroleum Dry Cleaners	03/15/85	10/27/99 64 FR 57780	
Section 707 ..	Perchloroethylene Dry Cleaning	03/15/85	10/27/99 64 FR 57780	
Section 708.1 through 708.8.	Solvent Cleaning	03/15/85	10/27/99 64 FR 57780	
Section 708.9 through 708.12.	Solvent Cleaning	10/02/98	10/27/99 64 FR 57780	
Section 709 ..	Asphalt Operations	03/15/85	10/27/99 64 FR 57780	
Section 710 ..	Engraving and Plate Printing	03/15/85	8/4/92 57 FR 34249	
Section 711 ..	Pumps and Compressors	03/15/85	10/27/99 64 FR 57780	
Section 712 ..	Waste Gas Disposal from Ethylene Producing Plant.	03/15/85	10/27/99 64 FR 57780	
Section 713 ..	Waste Gas Disposal from Blow-down Systems	03/15/85	10/27/99 64 FR 57780	
Section 715 ..	Reasonably Available Control Technology	09/30/93	10/27/99 64 FR 57780	
Section 716 ..	Offset Lithography	10/02/98	10/27/99 64 FR 57780	
Section 799 ..	Definitions and Abbreviations	10/02/98	10/27/99 64 FR 57780	
Chapter 8—Asbestos, Sulfur and Nitrogen Oxides				
Section 801 ..	Sulfur Content of Fuel Oils	3/15/85	8/28/95, 60 FR 44431	
Section 802 ..	Sulfur Content of Coal	3/15/85	8/28/95, 60 FR 44431	
Section 803 ..	Sulfur Process Emissions	3/15/85	8/28/95, 60 FR 44431	
Section 804 ..	Nitrogen Oxide Emissions	3/15/85	8/28/95, 60 FR 44431	
Section 805 ..	Reasonably Available Control Technology For Major Stationary Sources of Oxides of Nitrogen.	11/19/93 and 12/8/00	Type: 12/26/00	
Section 899 ..	Definitions and Abbreviations	3/15/85	8/28/95, 60 FR 44431	

EPA-APPROVED DISTRICT OF COLUMBIA REGULATIONS—Continued

State citation	Title/subject	State effective date	EPA approval date	Comments
Chapter 9—Motor Vehicle Pollutants, Lead, Odors, and Nuisance Pollutants				
Section 904 ..	Oxygenated Fuels	7/25/97	May 9, 2001 66 FR 23614	Addition of subsection 904.3 to make the oxygenated gasoline program a CO contingency measure.
Section 915 ..	National Low Emission Vehicle Program	02/11/00	07/20/00 65 FR 44984	
Chapter 10—Nitrogen Oxides Emissions Budget Program				
Section 1000	Applicability	12/08/00	12/22/00 65 FR 80784	
Section 1001	General Provisions	12/08/00		
Section 1002	Allowance Allocation	12/08/00		
Section 1003	Permits	12/08/00		
Section 1004	Allowance Transfer and Use	12/08/00		
Section 1005	Allowance Banking	12/08/00		
Section 1006	NO_X Allowance Tracking System	12/08/00		
Section 1007	Emission Monitoring	12/08/00		
Section 1008	Record Keeping	12/08/00		
Section 1009	Reporting	12/08/00		
Section 1010	End-Of-Season Reconciliation	12/08/00		
Section 1011	Compliance Certification	12/08/00		
Section 1012	Penalties	12/08/00		
Section 1013	Program Audit	12/08/00		
Section 1014	NO_X Budget Trading Program For State Implementation Plans.	5/01/01	11/01/01	
Section 1099	Definitions and Abbreviations	12/08/00		
Appendices				
Appendix 1 ...	Emission Limits for Nitrogen Oxide	03/15/85	8/28/95 60 FR 44431	
Appendix 2 ...	Table of Allowable Particulate Emissions from Process Sources.	03/15/85	8/28/95 60 FR 44431	
Appendix 3 ...	Allowable VOC Emissions Under Section 710	03/15/85	8/28/95 60 FR 44431	
Appendix 5 ...	Test Methods for Sources of Volatile Organic Compounds.	10/02/98	10/27/99 64 FR 57780	
Title 18—Vehicles and Traffic Chapter 4 Motor Vehicle Title and Registration				
Section 411 ..	Registration of Motor Vehicles: General Provisions.	10/10/86	June 11, 1999	
Section 412 ..	Refusal of Registration	10/17/97	June 11, 1999	
Section 413 ..	Application for Registration	9/16/83	June 11, 1999	
Section 429 ..	Enforcement of Registration and Reciprocity Requirements.	3/4/83	June 11, 1999	
Chapter 6 Inspection of Motor Vehicles				
Section 600 ..	General Provisions	4/23/82	June 11, 1999	
Section 602 ..	Inspection Stickers	3/15/85	June 11, 1999	
Section 603 ..	Vehicle Inspection: Approved Vehicles	6/29/74; Recodified 4/1/81	June 11, 1999	
Section 604 ..	Vehicle Inspection: Rejected Vehicles	11/23/84	4/10/86, 51 FR 12322	
Section 606 ..	Vehicle Inspection: Condemned Vehicles	6/29/74; Recodified 4/1/81	June 11, 1999	
Section 607 ..	Placement of Inspection Stickers on Vehicles	4/7/77; Recodified 4/1/81	June 11, 1999	
Section 608 ..	Lost, Mutilated or Detached Inspection Stickers	6/30/72; Recodified 4/1/81	June 11, 1999	

EPA-APPROVED DISTRICT OF COLUMBIA REGULATIONS—Continued

State citation	Title/subject	State effective date	EPA approval date	Comments
Section 609 ..	Inspection of Non-Registered Motor Vehicles	6/30/72; Recodified 4/1/81	June 11, 1999	
Section 617 ..	Inspection Certification	7/22/94	June 11, 1999	
Section 618 ..	Automotive Emissions Repair Technician	7/22/94	June 11, 1999	
Section 619 ..	Vehicle Emission Recall Compliance	10/17/97	June 11, 1999	
Chapter 7 Motor Vehicle Equipment				
Section 701 ..	Historic Motor Vehicles	2/25/78; Recodified 4/1/81	June 11, 1999	
Section 750 ..	Exhaust Emission Systems	4/26/77; Recodified 4/1/81	June 11, 1999	
Section 751 ..	Compliance with Exhaust Emission Standards	7/22/94	June 11, 1999	
Section 752 ..	Maximum Allowable Levels of Exhaust Components.	10/17/97	June 11, 1999	
Section 753 ..	Inspection of Exhaust Emission Systems	5/23/83	4/10/86, 51 FR 12322	
Section 754 ..	Federal Transient Emissions Test: Testing Procedures.	7/22/94	June 11, 1999	
Section 755 ..	Federal Transient Emissions Test: Equipment	7/22/94	June 11, 1999	
Section 756 ..	Federal Transient Emissions Test: Quality Assurance Procedures.	7/22/94	June 11, 1999	
Chapter 11 Motor Vehicle Offenses and Penalties				
Section 1101	Offenses Related to Title, Registration, and Identification Tags.	6/30/72; Recodified 4/1/81	June 11, 1999	
Section 1103	Offenses Related to Inspection Stickers	6/30/72; Recodified 4/1/81	June 11, 1999	
Section 1104	False Statements, Alterations, Forgery, and Dishonest Checks.	11/29/91	June 11, 1999	
Section 1110	Penalties for Violations	11/29/91	June 11, 1999.	
Chapter 26 Civil Fines for Moving and Non-Moving Violations				
Section 2600.1.	Infraction: Inspection, Registration Certificate, Tags.	8/31/90	June 11, 1999	
Chapter 99 Definitions				
Section9901	Definitions	10/17/97	June 11, 1999	

(d) *EPA approved State source specific requirements.*

EPA-APPROVED DISTRICT OF COLUMBIA SOURCE-SPECIFIC REQUIREMENTS

Name of Source	Permit number	State effective date	EPA approval date	Comments
General Services Administration Central Heating and Refrigeration Plant and West Heating Plant.	N/A—it is the operating permit issued to GSA by the District of Columbia on October 17, 1997.	Oct 17, 1997.	Sept 30, 1999, 64 FR 52657..	The following portions of GSA's operating permit are not included in the SIP: The portion of Condition 3 referring to Table 1, Table 1, Condition 4, Table 3, and Condition 17.

(e) [Reserved]

[63 FR 67417, Dec. 7, 1998, as amended at 64 FR 31500, June 11, 1999; 64 FR 52657, Sept. 30, 1999; 64 FR 57780, Oct. 27, 1999; 64 FR 68294, Dec 7, 1999; 65 FR 44984, July 20, 2000; 65 FR 80784, Dec. 22, 2000; 65 FR 81370, Dec. 26, 2000; 66 FR 23614, May 9, 2001; 66 FR 55102, Nov. 1, 2001; 68 FR 33639, June 5, 2003]

§ 52.471 Classification of regions.

The District of Columbia plan was evaluated on the basis of the following classifications:

Air quality control region	Pollutant				
	Particulate matter	Sulfur oxides	Nitrogen dioxide	Carbon monoxide	Ozone
National Capital Interstate	I	I	III	I	I

[37 FR 10857, May 31, 1972, as amended at 39 FR 16346, May 8, 1974; 46 FR 61263, Dec. 16, 1981]

§ 52.472 Approval status.

(a) With the exceptions set forth in this subpart, the Administrator approves the District of Columbia's plan for the attainment and maintenance of the national standards.

(b) With respect to the transportation control strategies submitted on April 19, July 9, and July 16, 1973, the Administrator approves the measures for parking surcharge, car pool locator, vehicle inspection, express bus lanes, increased bus fleet and service, elimination of free parking by private employers, with exceptions set forth in §§ 52.476, 52.483, 52.486, and 52.479.

(c) With the exceptions set forth in this subpart, the Administrator approves the District of Columbia's plan for the attainment and maintenance of the national standards under section 110 of the Clean Air Act. Furthermore, the Administrator finds that the plan satisfies all requirements of Part D, Title 1, of the Clean Air Act as amended in 1977.

(d) Section 710 of title 20 of the District of Columbia Regulations is approved with the following condition: Any alternative controls or exemptions under section 710.8 approved or granted by the District of Columbia are subject to a public notice and public hearing requirements and must be submitted to EPA as SIP revisions. Such alternatives or exemptions are not effective until approved as SIP revisions by EPA.

(e) [Reserved]

(f) Disapproval of revisions to the District of Columbia State Implementation Plan, District of Columbia Municipal Regulations (DCMR) Title 20, Sections 200, 201, 202, 204 and 299, pertaining to permitting of sources, and associated definitions in Section 199 submitted on June 21, 1985 and October 22, 1993 by the Mayor of the District of Columbia (1985 submittal) and by the Administrator of the District of Columbia Environmental Regulation Administration (1993 submittal). The disapproved regulations include those applicable to major new and major modified sources wishing to locate in the District. A new source review program for such major sources is required under sections 182 and 184 of the Clean Air Act. There are many deficiencies in the DCMR permitting regulations. Some of these deficiencies are the lack of public notice and comment procedures for new and modified sources applying for construction permits, the existence of a provision that allows the Mayor to grant indefinite 1-month temporary permits to those sources whose permits he/she determines have been delayed because of his/her office, the inclusion of a major source operating permit program, the inclusion of a minor source operating permit program that does not meet Part D requirements of the Act, the exemption of certain fuel burning (nitrogen oxide emitting) sources, incorrect citations of the Clean Air Act, a provision that

allows circumvention of the offset requirement, and the lack of the de minimis special modification provisions required in serious and severe ozone nonattainment areas (section 182(c)(6) of the Clean Air Act).

[38 FR 33709, Dec. 6, 1973, as amended at 46 FR 61263, Dec. 16, 1981; 57 FR 34251, Aug. 4, 1992; 60 FR 5136, Jan. 26 1995; 60 FR 15486, Mar. 24, 1995; 61 FR 2936, Jan. 30, 1996]

§ 52.473 Conditional approval.

The District of Columbia's severe ozone nonattainment area SIP for the Metropolitan Washington area, which includes the 1996–1999 portion of the rate-of-progress plan submitted on November 3, 1997, and May 25, 1999 and the transportation control measures in Appendix H of the May 25, 1999 submittal, and the severe ozone attainment demonstration submitted on April 24, 1998, October 27, 1998, February 16, 2000 and section 9.1.1.2 of the March 22, 2000 submittal, is conditionally approved contingent on the District submitting a revised SIP by April 17, 2004 that satisfies certain conditions. This conditional approval also establishes motor vehicle emissions budgets for 2005 of 101.8 tons per day of volatile organic compounds (VOC) and 161.8 tons per day of nitrogen oxides (NO_X) to be used in transportation conformity in the Metropolitan Washington, DC serious ozone nonattainment area until revised budgets based upon the MOBILE6 model are submitted and found adequate. The District must submit a revised SIP by April 17, 2004 that satisfies the following conditions.

(1) Revises the 1996–1999 portion of the severe area ROP plan to include a contingency plan containing those adopted measures that qualify as contingency measures to be implemented should EPA determine that the Washington area failed to achieve the required 9 percent rate-of-progress reductions by November 15, 1999.

(2) Revises the 1999–2005 portion of the severe area rate-of-progress plan to provide MOBILE6-based mobile source emission budgets and adopted measures sufficient to achieve emission reductions of ozone precursors of at least 3 percent per year from November 15, 1999 to the November 15, 2005 severe ozone attainment date.

(3) Revises the severe area ROP plan to include a contingency plan containing those adopted measures that qualify as contingency measures to be implemented should EPA determine that the Washington area failed to achieve the ROP reductions required for the post-1999 period.

(4) Revises the Washington area severe attainment demonstration to include a contingency plan containing those adopted measures that qualify as contingency measures to be implemented for the failure of the Washington area to attain the one-hour ozone standard for serious areas by November 15, 1999.

(5) Revises the Washington area severe attainment demonstration to reflect revised MOBILE6-based motor vehicle emissions budgets, including revisions to the attainment modeling/weight of evidence demonstration and adopted control measures, as necessary, to show that the SIP continues to demonstrate attainment by November 15, 2005.

(6) Revises the Washington area severe attainment demonstration to include a contingency plan containing those measures to be implemented if the Washington area does not attain the one-hour ozone standard by November 15, 2005.

(7) Revises the Washington area severe attainment demonstration to include a revised RACM analysis and any revisions to the attainment demonstration including adopted control measures, as necessitated by such analysis.

(8) Revises the major stationary source threshold to 25 tons per year.

(9) Revises Reasonably Available Control Technology (RACT) rules to include the lower major source applicability threshold.

(10) Revises new source review offset requirement to require an offset ratio of at least 1.3 to 1.

(11) Includes a fee requirement for major sources of volatile organic compounds (VOC) and nitrogen oxides (NO_X) should the area fail to attain by November 15, 2005.

(12) Includes a revision that identifies and adopts specific enforceable transportation control strategies and transportation control measures to offset any growth in emissions from growth

in vehicle miles traveled or number of vehicle trips and to attain reductions in motor vehicle emissions as necessary, in combination with other emission reduction requirements in the Washington area, to comply with the rate-of-progress requirements for severe areas. Measures specified in section 108(f) of the Clean Air Act will be considered and implemented as necessary to demonstrate attainment.

[68 FR 19131, Apr. 17, 2003]

EFFECTIVE DATE NOTE: At 69 FR 19937, Apr. 15, 2004, § 52.473 was stayed indefinitely.

§ 52.474 1990 Base Year Emission Inventory.

(a) EPA approves as a revision to the District of Columbia Implementation Plan the 1990 base year emission inventory for the Washington Metropolitan Statistical Area, submitted by Director, District of Columbia Consumer and Regulatory Affairs, on January 13, 1994 and October 12, 1995. This submittal consist of the 1990 base year stationary, area and off-road mobile and on-road mobile emission inventories in the Washington Statistical Area for the pollutant, carbon monoxide (CO).

(b) EPA approves as a revision to the District of Columbia State Implementation Plan the 1990 base year emission inventory for the District's portion of the Metropolitan Washington DC ozone nonattainment area submitted by the Director, DCRA, on January 13, 1994. This submittal consists of the 1990 base year point, area, highway mobile, nonroad and biogenic source emission inventories in the area for the following pollutants: Volatile organic compounds (VOC), carbon monoxide (CO), and oxides of nitrogen (NO_X).

(c) EPA approves as a revision to the District of Columbia State Implementation Plan an amendment to the 1990 base year emission inventories for the District's portion of the Metropolitan Washington, D.C. ozone nonattainment area submitted by the Director, Department of Consumer and Regulatory Affairs, on November 3, 1997. This submittal consists of amendments to the 1990 base year point, area, highway mobile, and non-road source emission inventories in the area for the following pollutants: volatile organic compounds (VOC), and oxides of nitrogen (NO_X).

[61 FR 2936, Jan. 30, 1996, as amended at 62 FR 19679, Apr. 23, 1997; 63 FR 36858, July 8, 1998]

§ 52.475 Extensions.

The Administrator hereby approves a request to extend the attainment date for the national ambient air quality standards for ozone to November 15, 2005 for the Metropolitan Washington, DC ozone nonattainment area.

[66 FR 631, Jan. 3, 2001]

§ 52.476 Control strategy: ozone.

(a) EPA approves as a revision to the District of Columbia State Implementation Plan the 15 Percent Rate of Progress Plan for the District of Columbia's portion of the Metropolitan Washington, D.C. ozone nonattainment area, submitted by the Director of the District of Columbia Department of Health on April 16, 1998.

(b) EPA is approving the District of Columbia's post-1996 (ROP) plan SIP revision for the Washington area which was submitted on November 3, 1997, and supplemented on May 25, 1999.

(c) EPA approves the revisions to the State Implementation Plan submitted by the District of Columbia Department of Health on April 24, 1998, October 27, 1998, and February 16, 2000, and only section 9.1.1.2 of the March 22, 2000 SIP supplement dealing with a commitment to revise the 2005 attainment motor vehicle emissions budgets within one-year of the EPA's release of the MOBILE6 model. The revisions are for the purpose of satisfying the attainment demonstration requirements of section 182(c)(2)(A) of the Clean Air Act for the Metropolitan Washington, DC serious ozone nonattainment area. The revision establishes an attainment date of November 15, 2005 for the Metropolitan Washington, DC ozone nonattainment area. This revision establishes motor vehicle emissions budgets for 2005 of 101.4 tons per day of volatile organic compounds (VOC) and 166.7 tons per day of nitrogen oxides (NO_X) to be used in transportation conformity in the Metropolitan Washington, DC. Serious ozone nonattainment area until revised budgets based upon the

MOBILE6 model are submitted and found adequate. In the revision, the District of Columbia commits to revise their VOC and NO_X transportation conformity budgets within one year of the release of the MOBILE6 model. The District of Columbia also commits to conduct a mid-course review to assess modeling and monitoring progress achieved towards the goal of attainment by 2007, and submit the results to EPA by December 31, 2003.

[64 FR 42602, Aug. 5, 1999, as amended at 66 FR 631, Jan. 3, 2001]

§ 52.477 [Reserved]

§ 52.478 Rules and Regulations.

(a) On April 8, 1993, the District of Columbia submitted a letter to EPA declaring that there are no sources located in the District belonging to the following VOC categories:

(1) Automobile and light-duty truck manufacturing;

(2) Coating of cans, coils, paper, fabric and vinyl, metal furniture, large appliances, magnet wire, miscellaneous metal parts and products, and flatwood paneling;

(3) Storage of petroleum liquids in fixed-roof tanks and external floating-roof tanks;

(4) Bulk gasoline plants and terminals;

(5) Petroleum refinery sources;

(6) Petroleum refinery equipment leaks;

(7) Manufacture of synthesized pharmaceutical products, pneumatic rubber tires, vegetable oil, synthetic organic chemicals (fugitive VOCs and air oxidation), and high density polyethylene, polypropylene and polystyrene resins;

(8) Graphic arts systems;

(9) Storage, transportation and marketing of VOCs (fugitive VOCs from oil and gas production and natural gas and gasoline processing).

(b) On September 4, 1997, the District of Columbia submitted a letter to EPA declaring that there are no sources located in the District which belong to the following VOC categories:

(1) Coating of plastic parts (business machines and other);

(2) Aerospace;

(3) Shipbuilding and repair;

(4) Automobile refinishing;

(5) Industrial wastewater;

(6) Distillation or reactor or batch processes in the synthetic organic chemical manufacturing industry;

(7) Volatile organic storage;

(8) Wood furniture coatings;

(9) Offset lithography;

(10) Clean-up solvents.

[64 FR 57781, Oct. 27, 1999]

§ 52.479 Source surveillance.

(a) [Reserved]

(b) The requirements of § 51.213 are not met with respect to the strategies for carpool locator service. The remaining transportation measures in the previously federally-promulgated implementation plan have been mooted by court decision (*District of Columbia* v. *Costle*, 567 F. 2d 1091 (D.C. Cir 1977)) or rescinded by EPA.

[46 FR 61263, Dec. 16, 1981, as amended at 51 FR 40677, Nov. 7, 1986]

§ 52.480 Photochemical Assessment Monitoring Stations (PAMS) Program.

On January 14, 1994 the District of Columbia's Department of Consumer and Regulatory Affairs submitted a plan for the establishment and implementation of a Photochemical Assessment Monitoring Stations (PAMS) Program as a state implementation plan (SIP) revision, as required by section 182(c)(1) of the Clean Air Act. EPA approved the Photochemical Assessment Monitoring Stations (PAMS) Program on September 11, 1995 and made it part of the District of Columbia SIP. As with all components of the SIP, the District of Columbia must implement the program as submitted and approved by EPA.

[60 FR 47084, Sept. 11, 1995]

§§ 52.481–52.497 [Reserved]

§ 52.498 Requirements for state implementation plan revisions relating to new motor vehicles.

The District of Columbia must comply with the requirements of § 51.120.

[60 FR 4737, Jan. 24, 1995]

§ 52.499 Significant deterioration of air quality.

(a) The requirements of sections 160 through 165 of the Clean Air Act are not met, since the plan does not include approvable procedures for preventing the significant deterioration of air quality.

(b) Regulations for preventing significant deterioration of air quality. The provisions of § 52.21 except paragraph (a)(1) are hereby incorporated and made a part of the applicable State plan for the District of Columbia.

[43 FR 26410, June 19, 1978, as amended at 45 FR 52741, Aug. 7, 1980; 68 FR 11322, Mar. 10, 2003; 68 FR 74488, Dec. 24, 2003]

§ 52.510 Small business assistance program.

On October 22, 1993, the Administrator of the District of Columbia Environmental Regulation Administration submitted a plan for the establishment and implementation of a Small Business Technical and Environmental Compliance Assistance Program as a state implementation plan revision (SIP), as required by title V of the Clean Air Act. EPA approved the Small Business Technical and Environmental Compliance Assistance Program on August 17, 1994 and made it part of the District of Columbia SIP. As with all components of the SIP, the District of Columbia must implement the program as submitted and approved by EPA.

[59 FR 42168, Aug. 17, 1994]

§ 52.515 Original identification of plan section.

(a) This section identifies the original "Air Implementation Plan for the District of Columbia" and all revisions submitted by the District of Columbia that were federally approved prior to July 1, 1998.

(b) The above plan was officially submitted on January 31, 1972, by the Mayor/Commissioner.

(c) The plan revisions listed below were submitted on the dates specified.

(1) Control strategies for sulfur oxides and particulate matter were defined by the District's "Implementation Plan for Controlling Sulfur Oxide and Particulate Air Pollutants" submitted on August 14, 1970, by the District of Columbia.

(2) Addition to Permit to Construct regulation, Section 8–2:720 of the District of Columbia Control Regulations, plus miscellaneous non-regulatory revisions to the plan submitted April 28, 1972, by the District of Columbia.

(3) Particulate matter emission rate graph submitted on January 29, 1973, by the Department of Environmental Services.

(4) Plan revisions were submitted on January 29, 1973, by the Department of Environmental Services.

(5) Transportation Control Plans for the District of Columbia's portion of National Capital AQCR submitted on April 20, 1973, by the Mayor/Commissioner.

(6) Amendments to the Transportation Control Plan for the District of Columbia submitted on July 9, 1973, by the Mayor/Commissioner.

(7) Amendments to the Transportation Control Plan for the District of Columbia submitted on July 16, 1973, by the Mayor/Commissioner.

(8) Amendments to Sections 8–2:702 (Definitions) and 8–2:707, (Control of Organic Compounds), subsections (a), (b), (c), (d), (e), and (f) of the District of Columbia Air Quality Control Regulations submitted on March 22, 1974 by the Mayor/Commissioner.

(9) Amendments to Sections 8–2:704 and 8–2:705 of the District of Columbia Air Quality Control Regulations submitted on February 25, 1976 by the Mayor.

(10) Section 8–2:709 and Section 8–2:724 are amended to limit particulate emissions to .08 grains per day standard cubic foot at Solid Waste Reduction Center #1 (S.W.R.C. #1) and allow continued operation of S.W.R.C. #1 respectively; submitted July 17, 1975 by the District of Columbia.

(11) Amendments to Sections 8–2:704 (Use of Certain Fuel Oils Forbidden), 8–2:705 (Use of Certain Coal Forbidden), and 8–2:713 (Visible Emissions) of the District of Columbia Air Quality Control Regulations submitted on March 3, 1977 by the Mayor.

(12) Amendments to Sections 8–2:702 (Definitions), 8–2:708 (Fuel Burning Particulate Emission) and 8–2:720 (Permits to Construct or Modify, Permits

to Operate); an amendment deleting Appendix 1 from the District of Columbia Air Quality Control Regulations submitted by the Mayor on May 25, 1978.

(13) Amendments to Sections 8–2:704 (Allowable Sulfur Content in Fuel Oil) and 8–2:705 (Allowable Sulfur Content in Coal) of the District's Air Quality Control Regulations submitted on December 27, 1978, by Mayor Walter E. Washington is hereby approved until December 31, 1980.

(14)–(15) [Reserved]

(16) Amendments to Sections 8–2:702 (Definition Changes), 8–2:708 (Performance Testing), 8–2:713 (Visible Emissions), 8–2:718 (Emission Testing), 8–2:726 (Penalties) of the District's Air Quality Control Regulations, and Section 6–812(a)(5) (Penalties) of the District of Columbia's Air Quality Control Act submitted on December 27, 1978 by Mayor Walter E. Washington.

(17) Amendments to Sections 8–2:704 (Allowable Sulfur Content in Fuel Oil) and 8–2:705 (Allowable Sulfur Content in Coal) of the District's Air Quality Control Regulations submitted on December 27, 1978, by Mayor Walter E. Washington are approved indefinitely.

(18) Amendments to Regulations I (Definitions), XXIV (Control of Volatile Organic Compounds Emissions) and XXV (Requirements for Preconstruction Review) submitted on March 19, 1980 by the Secretary, Delaware Department of Natural Resources and Environmental Control.

(19) The Plan revision entitled "Revisions to the Implementation Plan for the District of Columbia for Attainment of the National Ambient Air Quality Standards for Particulates, Oxidants and Carbon Monoxide" for all areas designated nonattainment as of March 3, 1978 and September 12, 1978 submitted on December 26, 1979 by the Mayor. Included was a request for revocation and/or revision of sections of subpart J which have been mooted by court decision (*District of Columbia* v. *Costle*, 567 F. 2d 1091 (D.C. Cir. 1977)), Congressional action, or rescission by EPA.

(20) Inspection and Maintenance Program Amendments to the transportation control portion of the nonattainment plan were submitted by the Mayor on September 7, 1979 and May 6, 1981.

(21) Amendments to the District's Air Quality Control Regulations for control of particulate matter, carbon monoxide and ozone were submitted by the Mayor on June 23, 1981.

(22) The Washington, DC Implementation Plan for maintaining the National Ambient Air Quality Standard for lead submitted on October 7, 1982 by the Mayor.

(23) Revision for Public Notification of Air Quality, submitted on December 5, 1983.

(24) Revision for Conflict of Interest procedures, submitted on December 6, 1983.

(25) Plan revision, excluding the required vehicle emission inspection program, providing for attainment of the Ozone and Carbon Monoxide Standards, submitted by the District of Columbia on December 28, 1982 and April 15, 1983.

(26) Revision to the 1982 District of Columbia Ozone and Carbon Monoxide Attainment Plan consisting of an approvable vehicle emission inspection and maintenance program, therefore, completing all necessary requirements for attainment of the Ozone and Carbon Monoxide standards; submitted by the Mayor on May 3, 1985. See paragraph (c)(25) of this section for date of original submittal.

(i) Incorporation by reference.

(A) Amendment to section 604 (Vehicle Inspection: Rejected Vehicles) of Title 18 of the District of Columbia Municipal Regulations as published in the *District of Columbia Register* on November 23, 1984.

(27) Revisions to the State Implementation Plan submitted by the Mayor of the District of Columbia on June 21, 1985, which define and impose RACT to control volatile organic compound emissions from engraving and plate printing sources.

(i) Incorporation by reference.

(A) A letter from the Mayor of the District of Columbia dated June 21, 1985, submitting revision to the District of Columbia State Implementation Plan, and a letter from the District of Columbia Department of Consumer and Regulatory Affairs dated

April 1, 1992, formally submitting additional information supplementing the June 21, 1985 submittal.

(B) Section 710 of title 20, submitted June 21, 1985 and effective March 15, 1985.

(28) Revisions to 20 District of Columbia Municipal Regulations (DCMR) pertaining to oxygenated gasoline submitted on October 22, 1993 by the District of Columbia's Department of Consumer and Regulatory Affairs.

(i) Incorporation by reference.

(A) Letter of October 22, 1993 from the District of Columbia's Department of Consumer and Regulatory Affairs transmitting the oxygenated gasoline regulations.

(B) District of Columbia Register dated July 30, 1993 containing 20 DCMR chapter 1, Section 199 definitions for the terms blending plant, distributor, non-oxygenated gasoline, oxygenate, oxygenated gasoline, oxygenated gasoline control period, oxygenated gasoline control area, refiner, refinery, retailer, retail outlet, terminal, wholesale purchaser-consumer; Chapter 5, Section 500, subsections 500.4 and 500.5; chapter 5, section 502, subsection 502.18; Chapter 9, section 904, subsections 904.1 and 904.2, effective September 30, 1993.

(ii) Additional material.

(A) Remainder of October 22, 1993 District of Columbia submittal.

(29)–(31) [Reserved]

(32) Revisions to the District of Columbia Regulations State Implementation Plan submitted on October 22, 1993 by the Government of the District of Columbia Department of Consumer and Regulatory Affairs.

(i) Incorporation by reference.

(A) Letter of October 22, 1993 from the Government of the District of Columbia Department of Consumer and Regulatory Affairs transmitting a revised regulation which require owners of stationary sources to submit emission statements annually.

(B) D.C. ACT 10–56 amendments to District of Columbia Air Pollution Control Act of 1984, Section 20 DCMR 199, specifically the addition of new definitions, and the addition of Section 20 DCMR 500.7. Effective on September 30, 1993.

(33) [Reserved]

(34) Revisions to Title 20 the District of Columbia Municipal Regulations (DCMR) on June 21, 1985 by the District of Columbia:

(i) Incorporation by reference.

(A) Letter of June 21, 1985 from the Mayor of the District of Columbia transmitting Act 5–165, representing the air pollution cotrol regulations codified in 20 DCMR.

(B) The revised provisions of 20 DCMR, effective March 15, 1985, as described below:

(*1*) Chapter 1—General.

Section 100 (Purpose, Scope, and Construction), subsections 100.1 through 100.5
Section 101 (Inspection), subsection 101.1
Section 102 (Orders for Compliance), subsections 102.1 through 102.3
Section 104 (Hearings), subsections 104.1 through 104.5
Section 105 (Penalty), subsections 105.1 through 105.4
Section 106 (Confidentiality of Reports), subsections 106.1 and 106.2
Section 107 (Control Devices or Practices), subsections 107.1 through 107.4
Section 199 The following definitions and abbreviations:

Definitions (Section 199.1)—*Added:* Affected facility, Building, structure, facility, or installation, Cartridge filter, Component, Containers and conveyers of solvent, Crude oil, Cylinder wipe, Emission unit, Federally enforceable, Flexography, Fugitive emission, Gas services, Gas services for pipeline/valves and pressure relief valves, Gravure, Heatset, Hydrocarbon, Ink, Inking cylinder, Innovative control technology, Intaglio, Leaking component, Lease custody transfer, Letterpress, Letterset, Liquid service, Necessary preconstruction, Net emission increase, Offset printing process, Offset lithography, Paper wipe, Perceptible, leak, Petroleum solvent, Plate, Printing, Printing operation, Printing Unit, Refinery operator, Refinery unit, Routing, Secondary emissions, Substrate, Vacuum still, Valves not externally regulated, Water-based solvent, Wiping solution. *Revised:* Air pollution, Distillate oil, Dry cleaning, Existing source, Fugitive dust, Incinerator, Loading facilities, Person, Start-up, Stationary source, Vapor tight, Wipe cleaning.

Unchanged from Section 8–2:702: Air Pollutant, Control Device, Conveyorized Degreaser, Cutback Asphalt, Cold Cleaner, District, Emission, Episode Stage, Fossil Fuel, Fossil-Fuel-Fired Steam-Generating Unit, Freeboard, Fuel Burning Equipment, Gasoline, Malfunction, Multiple Chamber Incinerator, Opacity, Open-top Vapor Degreaser, Organic Solvents, Particulate Matter, Photochemically Reactive Solvent, Process,

Process Weight, Process Rate Per Hour, Ringelmann Smoke Chart, Smoke, Solid Waste, Standard Conditions, Submerged Fill Pipe, Volatile Organic Compounds.

Abbreviations (Section 199.2)—*Added:* CFR, EPA, ppmv *Unchanged from Section 8–2:702:* B.T.U., cal., CO, COHs, cfm, g., Hi-Vol., hr., lb., max., NO_2, No., ppm, psia, SO_2, $\mu g/m^3$, U.L.

NOTE: Section 199 of Chapter 1 lists all of the applicable definitions and abbreviations, while Sections X99.1 and X99.2 of each chapter contain a cross-reference to definitions listed in Section 199.1 and abbreviations listed in Section 199.2.

(*2*) Chapter 4—Ambient Monitoring and Emergency Procedures.

Section 400 (Air Pollution Reporting Index), subsection 400.1
Section 401 (Emergency Procedures), subsections 401.1 through 401.4, 401.2 through 401.8, 401.7 (duplicate) and 401.8 (duplicate)
Section 499 (Definitions and Abbreviations), subsections 499.1 and 499.2

(*3*) Chapter 5—Source Monitoring and Testing.

Section 500 (Source Monitoring and Testing), subsections 500.1 through 500.3
Section 501 (Monitoring Devices), subsections 501.1 through 501.3
Section 502 (Sampling, Tests, and Measurements), subsections 502.1 through 502.15 (except for subsections 502.11, 502.12, and 502.14)
Section 599 (Definitions and Abbreviations), subsections 599.1 and 599.2

(*4*) Chapter 6—Particulates.

Section 600 (Fuel-Burning Particulate Emission), subsections 600.1 through 600.7
Section 601 (Rotary Cup Burners), subsections 601.1 and 601.2
Section 602 (Incinerators), subsections 602.1 through 602.6
Section 603 (Particulate Process Emissions), subsections 603.1 through 603.3
Section 604 (Open Burning), subsections 604.1 and 604.2
Section 605 (Control of Fugitive Dust), subsections 605.1 through 605.4
Section 606 (Visible Emissions), subsections 606.1 through 606.9
Section 699 (Definitions and Abbreviations), subsections 699.1 and 699.2

(*5*) Chapter 8—Asbestos, Sulfur and Nitrogen Oxides.

Section 801 (Sulfur Content of Fuel Oils), subsection 801.1
Section 802 (Sulfur Content of Coal), subsections 802.1 and 802.2
Section 803 (Sulfur Process Emissions), subsections 803.1 through 803.4
Section 804 (Nitrogen Oxide Emissions), subsection 804.1
Section 899 (Definitions and Abbreviations), subsections 899.1 and 899.2

(*6*) Appendices.

Appendix No. 1 (Emission Limits for Nitrogen Oxide)
Appendix No. 2 [Table of Allowable Particulate Emissions from Process Sources]
Appendix No. 3 [Allowable VOC Emissions under Section 710]

(*7*) Deletion of the following SIP provisions:

Section 8–2:721 (Complaints and Investigations)
Section 8–2:730 (Independence of Sections)
Section 8–2:731 (Effective Date)

The following definitions and abbreviations:

Definitions: Act, Air quality standard of the District of Columbia, Dry cleaning operation, Freeboard ratio, Mayor, Vehicular fuel tank.

Abbreviations: (Degree), VOC, "%".

(ii) Additional material.

(A) Remainder of June 21, 1985 District of Columbia submittal pertaining to the provisions listed above.

(35) [Reserved]

(36) The carbon monoxide redesignation and maintenance plan for the District of Columbia submitted by the District of Columbia Department of Consumer and Regulatory Affairs on October 12, 1995, as part of the District of Columbia SIP. The emission inventory projections are included in the maintenance plan.

(i) Incorporation by reference.

(A) Letter of October 12, 1995 from the District of Columbia Department of Consumer and Regulatory Affairs requesting the redesignation and submitting the maintenance plan.

(B) Maintenance Plan for the Metropolitan Washington Carbon Monoxide Nonattainment Area adopted on September 20, 1995.

(ii) Additional material.

(A) Remainder of October 12, 1995 State submittal.

(37) Revisions to the District of Columbia Municipal Regulations submitted on May 2, 1997 and May 9, 1997 by the District of Columbia Department of Consumer and Regulatory Affairs:

(i) Incorporation by reference.

(A) Letter of April 29, 1997 from the Department of Consumer and Regulatory Affairs transmitting new source review (NSR) program.

(B) Regulations adopted on April 29, 1997; Title 20 of the District of Columbia Municipal Regulations (DCMR) Chapter 2, sections 200 (as amended), 201, 202, 204 (as amended), 206, 299 and the amended definition of "modification" in Chapter 1, section 199.

(ii) Additional material.

(A) Remainder of May 2, 1997 State submittal.

(B) District Register for May 9, 1997.

[37 FR 19814, Sept. 22, 1972. Redesignated at 63 FR 67417, Dec. 7, 1998]

EDITORIAL NOTE: For FEDERAL REGISTER citations affecting § 52.515, see the List of CFR Sections Affected, which appears in the Finding Aids section of the printed volume and on GPO Access.

Subpart K—Florida

§ 52.520 Identification of plan.

(a) *Purpose and scope.* This section sets forth the applicable State implementation plan for Florida under section 110 of the Clean Air Act, 42 U.S.C. 7401, and 40 CFR part 51 to meet national ambient air quality standards.

(b) *Incorporation by reference.* (1) Material listed in paragraphs (c) and (d) of this section with an EPA approval date prior to January 1, 2003, was approved for incorporation by reference by the Director of the Federal Register in accordance with 5 U.S.C. 552(a) and 1 CFR part 51. Material is incorporated as it exists on the date of the approval, and notice of any change in the material will be published in the FEDERAL REGISTER. Entries in paragraphs (c) and (d) of this section with EPA approval dates after January 1, 2003, will be incorporated by reference in the next update to the SIP compilation.

(2) EPA Region 4 certifies that the rules/regulations provided by EPA in the SIP compilation at the addresses in paragraph (b)(3) of this section are an exact duplicate of the officially promulgated State rules/regulations which have been approved as part of the State implementation plan as of January 1, 2003.

(3) Copies of the materials incorporated by reference may be inspected at the Region 4 EPA Office at 61 Forsyth Street, SW., Atlanta, GA 30303; at the EPA, Office of Air and Radiation Docket and Information Center, Room B–108, 1301 Constitution Avenue, (Mail Code 6102T), NW., Washington, DC 20460; or at the National Archives and Records Administration (NARA). For information on the availability of this material at NARA, call 202–741–6030, or go to: *http://www.archives.gov/federal_register/code_of_federal_regulations/ibr_locations.html.*

(c) *EPA-approved regulations.*

EPA-APPROVED FLORIDA REGULATIONS

State citation (Section)	Title/subject	State effective date	EPA approval date	Explanation
Chapter 62–204 Air Pollution Control—General Provisions				
62–204.100	Purpose and Scope	3/13/96	6/16/99 64 FR 32346	
62–204.200	Definitions	3/13/96	6/16/99 64 FR 32346	
62–204.220	Ambient Air Protection	3/13/96	6/16/99 64 FR 32346	
62–204.240	Ambient Air Quality Standards	3/13/96	6/16/99 64 FR 32346	
62–204.260	Prevention of Significant Deterioration Increments.	3/13/96	6/16/99 64 FR 32346	
62–204.320	Procedures for Designation and Redesignation of Areas.	3/13/96	6/16/99 64 FR 32346	
62–204.340	Designation of Attainment, Nonattainment, and Maintenance Areas.	3/13/96	6/16/99 64 FR 32346	
62–204.360	Designation of Prevention of Significant Deterioration Areas.	3/13/96	6/16/99 64 FR 32346	
62–204.400	Public Notice and Hearing Requirements for State Implementation Plan Revisions.	11/30/94	6/16/99 64 FR 32346	

EPA-APPROVED FLORIDA REGULATIONS—Continued

State citation (Section)	Title/subject	State effective date	EPA approval date	Explanation
62–204.500	Conformity	08/31/98	08/11/03, 68 FR 47473	Except for the incorporation by reference of 40 CFR 93.104(e) of the Transportation Conformity Rule.
Chapter 62–210 Stationary Sources—General Requirements				
62–210.100	Purpose and Scope	11/23/94	6/16/99 64 FR 32346	
62–210.200	Definitions	10/15/96	5/27/98 63 FR 28905	
62–210.220	Small Business Assistance Program	10/15/96	5/27/98 63 FR 28905	
62–210.300	Permits Required	8/15/96	1/17/97 62 FR 2587	
62–210.350	Public Notice and Comment	11/23/94	6/16/99 64 FR 32346	
62–210.360	Administrative Permit Corrections	11/23/94	6/16/99 64 FR 32346	
62–210.370	Reports	11/23/94	6/16/99 64 FR 32346	
62–210.550	Stack Height Policy	11/23/94	6/16/99 64 FR 32346	
62–210.650	Circumvention	10/15/92	10/20/94 59 FR 52916	
62–210.700	Excess Emissions	11/23/94	6/16/99 64 FR 32346	
62–210.900	Forms and Instructions	2/9/93	11/7/94 59 FR 46157	
Chapter 62–212 Stationary Souces—Preconstruction Review				
62–212.100	Purpose and Scope	3/13/96	6/16/99 64 FR 32346	
62–212.300	General Preconstruction Review Requirements.	11/23/94	6/16/99 64 FR 32346	
62–212.400	Prevention of Significant Deterioration (PSD)	3/13/96	6/16/99 64 FR 32346	
62–212.500	Preconstruction Review for Nonattainment Areas.	3/13/96	6/16/99 64 FR 32346	
62–212.600	Sulfur Storage and Handling Facilities	3/13/96	6/16/99 64 FR 32346	
Chapter 62–242 Motor Vehicle Emissions Standards and Test Procedures				
62–242.100	Purpose and Scope	3/21/91	3/22/93 58 FR 15277	
62–242.200	Definitions	3/13/96	6/16/99 64 FR 32346	
62–242.400	Standards and Procedures for Inspection of Gasoline Fueled Vehicles; Pass/Fail Criteria.	2/2/93	10/11/94	
62–242.500	Standards and Procedures for Inspection of Diesel Fueled Vehicles; Pass/Fail Criteria.	2/2/93	10/11/94 59 FR 51382	
62–242.600	Equipment Performance Specifications	2/2/93	10/11/94 59 FR 51382	
62–242.700	Tampering Inspection	2/2/93	10/11/94 59 FR 51382	
62–242.800	Low Emissions Adjustment	2/2/93	10/11/94 59 FR 51382	
62–242.900	Training Criteria For Motor Vehicle Emissions Inspection Personnel.	2/2/93	10/11/94 59 FR 51382	
Chapter 62–243 Tampering With Motor Vehicle Air Pollution Control Equipment				
62–243.100	Purpose and Scope	5/29/90	6/9/92 57 FR 24370	

EPA-APPROVED FLORIDA REGULATIONS—Continued

State citation (Section)	Title/subject	State effective date	EPA approval date	Explanation
62–243.200	Definitions	1/2/91	6/9/92 57 FR 24378	
62–243.300	Exemptions	1/2/91	6/9/92 57 FR 24378	
62–243.400	Prohibitions	1/2/91	6/9/92 57 FR 24378	
62–243.500	Certification	1/2/91	6/9/92 57 FR 24378	
62–243.600	Enforcement	1/2/91	6/9/92 57 FR 24378	
62–243.700	Penalties	5/29/90	6/9/92 57 FR 24370	
Chapter 62–244 Visible Emissions From Motor Vehicles				
62–244.100	Purpose and Scope	5/29/90	6/9/92 57 FR 24370	
62–244.200	Definitions	1/2/91	6/9/92 57 FR 24378	
62–244.300	Exemptions	1/2/91	6/9/92 57 FR 24378	
62–244.400	Prohibitions	1/2/91	6/9/92 57 FR 24378	
62–244.500	Enforcement	1/2/91	6/9/92 57 FR 24378	
62–244.600	Penalties	5/29/90	6/9/92 57 FR 24370	
Chapter 62–252 Gasoline Vapor Control				
62–252.100	Purpose and Scope	2/2/93	3/24/94 59 FR 13883	
62–252.200	Definitions	2/2/93	3/24/94 59 FR 13883	
62–252.300	Gasoline Dispensing Facilities-Stage I Vapor Recovery.	2/2/93	3/21/94 59 FR 13883	
62–252.400	Gasoline Dispensing Facilities—Stage II Vapor Recovery.	11/23/94	6/16/99 64 FR 32346	
62–252.500	Gasoline Tanker Trucks	9/10/96	7/21/97 62 FR 38918	
62–252.800	Penalties	2/2/93	3/24/94 59 FR 13883	
62–252.900	Form	2/2/93	7/21/97 62 FR 38918	
Chapter 62–256 Open Burning and Frost Protection Fires				
62–256.100	Declaration and Intent	12/09/75	11/1/77 42 FR 57124	
62–256.200	Definitions	11/30/94	6/16/99 64 FR 32346	
62–256.300	Prohibitions	11/30/94	6/16/99 64 FR 32346	
62–256.400	Agricultural and Silvicultural Fires	7/1/71	5/31/72 37 FR 10842	
62–256.450	Burning for Cold or Frost Protection	6/27/91	9/9/94 59 FR 46552	
62–256.500	Land Clearing	11/30/94	6/16/99 64 FR 32346	
62–256.600	Industrial, Commercial, Municipal, and Research Open Burning.	7/1/71	5/31/72 37 FR 10842	
62–256.700	Open Burning Allowed	11/30/94	6/16/99 64 FR 32346	
62–256.800	Effective Date	7/1/71	5/31/72 37 FR 10842	
Chapter 62–296 Stationary Sources—Emission Standards				
62–296.100	Purpose and Scope	3/13/96	6/16/99 64 FR 32346	

EPA-APPROVED FLORIDA REGULATIONS—Continued

State citation (Section)	Title/subject	State effective date	EPA approval date	Explanation
62–296.320	General Pollutant Emission Limiting Standards.	3/13/96	6/16/99 64 FR 32346	
62–296.401	Incinerators	3/13/96	6/16/99 64 FR 32346	
62–296.402	Sulfuric Acid Plants	3/13/96	6/16/99 64 FR 32346	
62–296.403	Phosphate Processing	3/13/96	6/16/99 64 FR 32346	
62–296.404	Kraft (Sulfate) Pulp Mills and Tall Oil Plants	3/13/96	6/16/99 64 FR 32346	
62–296.405	Fossil Fuel Steam Generators with more than 250 million Btu per Hour Heat Input.	3/13/96	6/16/99 64 FR 32346	
62–296.406	Fossil Fuel Steam Generator with less than 250 million Btu per Hour Heat Input, New and Existing Emissions Units.	3/13/96	6/16/99 64 FR 32346	
62–296.407	Portland Cement Plants	11/23/94	6/16/99 64 FR 32346	
62–296.408	Nitric Acid Plants	11/23/94	6/16/99 64 FR 32346	
62–296.409	Sulfur Recovery Plants	11/23/94	6/16/99 64 FR 32346	
62–296.410	Carbonaceous Fuel Burning Equipment	11/23/94	6/16/99 64 FR 32346	
62–296.411	Sulfur Storage and Handling Facilities	11/23/94	6/16/99 64 FR 32346	
62–296.412	Dry Cleaning Facilities	06/05/96	01/16/03 68 FR 2205	
62–296.413	Synthetic Organic Fiber Production	3/13/96	6/16/99 64 FR 32346	
62–296.414	Concrete Batching Plants	3/13/96	6/16/99 64 FR 32346	
62–296.415	Soil Thermal Treatment Facilities	3/13/96	6/16/99 64 FR 32346	
62–296.500	Reasonably Available Control Technology (RACT)—Volatile Organic Compounds (VOC) and Nitrogen Oxides (NO_X) Emitting Facilities.	11/23/94	6/16/99 64 FR 32346	
62–296.501	Can Coating	11/23/94	6/16/99 64 FR 32346	
62–296.502	Coil Coating	11/23/94	6/16/99 64 FR 32346	
62–296.503	Paper Coating	11/23/94	6/16/99 64 FR 32346	
62–296.504	Fabric and Vinyl Coating	11/23/94	6/16/99 64 FR 32346	
62–296.505	Metal Furniture Coating	11/23/94	6/16/99 64 FR 32346	
62–296.506	Surface Coating of Large Appliances	11/23/94	6/16/99 64 FR 32346	
62–296.507	Magnet Wire Coating	11/23/94	6/16/99 64 FR 32346	
62–296.508	Petroleum Liquid Storage	11/23/94	6/16/99 64 FR 32346	
62–296.509	Bulk Gasoline Plants	10/15/92	10/20/94 59 FR 52916	
62–296.510	Bulk Gasoline Terminals	11/23/94	6/16/99 64 FR 32346	
62–296.511	Solvent Metal Cleaning	06/05/96	01/16/03 68 FR 2205	
62–296.512	Cutback Asphalt	11/23/94	6/16/99 64 FR 32346	
62–296.513	Surface Coating of Miscellaneous Metal Parts and Products.	11/23/94	6/16/99 64 FR 32346	
62–296.514	Surface Coating of Flat Wood Paneling	11/23/94	6/16/99 64 FR 32346	
62–296.515	Graphic Arts Systems	11/23/94	6/16/99 64 FR 32346	
62–296.516	Petroleum Liquid Storage Tanks with External Floating Roofs.	11/23/94	6/16/99 64 FR 32346	

EPA-APPROVED FLORIDA REGULATIONS—Continued

State citation (Section)	Title/subject	State effective date	EPA approval date	Explanation
62–296.570	Reasonably Available Control Technology (RACT)—Requirements for Major VOC and NO_X—Emitting Facilities.	11/23/94	6/16/99 64 FR 32346	
62–296.600	Reasonably Available Control Technology (RACT)—Lead.	3/13/96	6/16/99 64 FR 32346	
62–296.601	Lead Processing Operations in General	8/8/94	9/18/96 61 FR 49064	
62–296.602	Primary Lead Acid Battery Manufacturing Operations.	3/13/96	9/18/96 61 FR 49064	
62–296.603	Secondary Lead Smelting Operations	8/8/94	9/18/96 61 FR 49064	
62–296.604	Electric Arc Furnace Equipped Secondary Steel Manufacturing Operations.	8/8/94	9/18/96 61 FR 49064	
62–296.605	Lead Oxide Handling Operations	8/8/94	9/18/96 61 FR 49064	
62–296.700	Reasonably Available Control Technology (RACT)—Particulate Matter.	11/23/94	6/16/99 64 FR 32346	
62–296.701	Portland Cement Plants	11/23/94	6/16/99 64 FR 32346	
62–296.702	Fossil Fuel Steam Generators	11/23/94	6/16/99 64 FR 32346	
62–296.703	Carbonaceous Fuel Burners	11/23/94	6/16/99 64 FR 32346	
62–296.704	Asphalt Concrete Plants	11/23/94	6/16/99 64 FR 32346	
62–296.705	Phosphate Processing operations	11/23/94	6/16/99 64 FR 32346	
62–296.706	Glass Manufacturing Process	11/23/94	6/16/99 64 FR 32346	
62–296.707	Electric Arc Furnaces	11/23/94	6/16/99 64 FR 32346	
62–296.708	Sweat of Pot Furnaces	11/23/94	6/16/99 64 FR 32346	
62–296.709	Lime Kilns	11/23/94	6/16/99 64 FR 32346	
62–296.710	Smelt Dissolving Tanks	11/23/94	6/16/99 64 FR 32346	
62–296.711	Materials Handling, Sizing, Screening, Crushing and Grinding operations.	11/23/94	6/16/99 64 FR 32346	
62–296.712	Miscellaneous Manufacturing Process Operations.	11/23/94	6/16/99 64 FR 32346	
Chapter 62–297 Stationary Sources—Emissions Monitoring				
62–297.100	Purpose and Scope	3/13/96	6/16/99 64 FR 32346	
62–297.310	General Test Requirements	3/13/96	6/16/99 64 FR 32346	
62–297.400	EPA Methods Adopted by Reference	11/23/94	6/16/99 64 FR 32346	
62–297.401	Compliance Test Methods	3/13/96	6/16/99 64 FR 32346	
62–297.411	DEP Method 1	11/23/94	6/16/99 64 FR 32346	
62–297.412	DEP Method 2	10/15/92	10/20/94 59 FR 52916	
62–297.413	DEP Method 3	10/15/92	10/20/94 59 FR 52916	
62–297.415	DEP Method 5	11/23/94	6/16/99 64 FR 32346	
62–297.416	DEP Method 5A	10/15/92	10/20/94 59 FR 52916	
62–297.417	DEP Method 6	11/23/94	6/16/99 64 FR 32346	
62–297.423	EPA Method 12—Determination of Inorganic Lead Emissions from Stationary Emissions Units.	11/23/94	6/16/99 64 FR 32346	
62–297.440	Supplementary Test Procedures	11/23/94	6/16/99 64 FR 32346	

EPA-APPROVED FLORIDA REGULATIONS—Continued

State citation (Section)	Title/subject	State effective date	EPA approval date	Explanation
62–297.450	EPA VOC Capture Efficiency Test Procedures.	11/23/94	6/16/99 64 FR 32346	
62–297.620	Exceptions and Approval of Alternate Procedures and Requirements.	11/23/94	6/16/99 64 FR 32346	

(d) *EPA-approved State Source-specific requirements.*

EPA-APPROVED FLORIDA SOURCE-SPECIFIC REQUIREMENTS

Name of source	Permit No.	State effective date	EPA approval date	Explanation
Harry S Truman, animal import center	NA	11/26/96	1/19/00 65 FR 2882	
Martin Gas Sales, Inc	0570477–007–AC	1/17/03	5/1/03 68 FR 23209	

(e) *EPA-approved Florida non-regulatory provisions.*

EPA-APPROVED FLORIDA NON-REGULATORY PROVISIONS

Provision	State effective date	EPA approval date	**Federal Register** notice	Explanation
Revision to Maintenance Plan for Southeast Florida Area.	12/20/02	2/13/04	69 FR 7132	10 year update.
Revision to Maintenance Plan for the Tampa, Florida Area.	12/20/02	3/29/04	69 FR 16172	10 year update.
Revision to Maintenance Plan Update for Jacksonville Area, Florida.	12/20/02	07/22/03	68 FR 43315	

[64 FR 32348, June 16, 1999, as amended at 65 FR 2882, Jan. 19, 2000; 66 FR 40139, Aug. 2, 2001; 67 FR 53317, Aug. 15, 2002; 68 FR 2205, Jan. 16, 2003; 68 FR 9554, Feb. 28, 2003; 68 FR 20075, Apr. 24, 2003; 68 FR 23209, May 1, 2003; 68 FR 43315, July 22, 2003; 68 FR 47473, Aug. 11, 2003; 69 FR 7132, Feb. 13, 2004; 69 FR 16172, Mar. 29, 2004]

EFFECTIVE DATE NOTE: At 69 FR 33862, June 17, 2004, § 52.520 was amended by adding a new entry at the end of the table in paragraph (d) for "Broward County Aviation Department", effective July 19, 2004. For the convenience of the user, the added text follows:

§ 52.520 Identification of plan.

* * * * *

(d) * * *

EPA APPROVED FLORIDA SOURCE-SPECIFIC REQUIREMENTS

Name of source	Permit number	State effective date	EPA approval date	Explanation
* * *	*	*	*	*
Broward County Aviation Department	.....	8/15/03	6/17/04, 69 FR 33862	Order Granting Variance from Rule 62–252.400.

* * * * *

§ 52.521 Classification of regions.

The Florida plan was evaluated on the basis of the following classifications:

Air quality control region	Pollutant				
	Particulate matter	Sulfur oxides	Nitrogen dioxide	Carbon monoxide	Photochemical oxidants (hydrocarbons)
Mobile (Alabama)-Pensacola-Panama City (Florida)-Southern Mississippi Interstate	I	I	III	III	I
Jacksonville (Florida)-Brunswick (Georgia) Interstate	I	II	III	III	I
West Central Florida Intrastate	I	I	III	III	III
Central Florida Intrastate	II	III	III	III	III
Southwest Florida Intrastate	III	III	III	III	III
Southeast Florida Intrastate	II	III	III	III	III

[37 FR 10858, May 31, 1972, as amended 39 FR 16346, May 8, 1974]

§ 52.522 Approval status.

With the exceptions set forth in this subpart, the Administrator approves Florida's plans for the attainment and maintenance of the national standards under section 110 of the Clean Air Act. Furthermore, the Administrator finds the plans satisfy all requirements of Part D, Title I, of the Clean Air Act as amended in 1977, except as noted below. In addition, continued satisfaction of the requirements of Part D, for the ozone portion of the SIP depends on the adoption and submittal of RACT requirements by July 1, 1980 for those sources covered by CTGs issued between January 1978 and January 1979 and adoption and submittal by each subsequent January of additional RACT requirements for sources covered by CTGs issued by the previous January.

[45 FR 17143, Mar. 18, 1980]

§ 52.523 [Reserved]

§ 52.524 Compliance schedules.

(a) The requirements of § 51.262(a) of this chapter are not met since compliance schedules with adequate increments of progress have not been submitted for every source for which they are required.

(b) Federal compliance schedules. (1) Except as provided in paragraph (b)(6) of this section, the owner or operator of any stationary source subject to the following emission limiting regulations in the Florida implementation plan shall comply with the compliance schedule in paragraph (b)(2) of this section, Rules of the State of Florida, Department of Pollution Control, Air Pollution, subsections 17–2.04(2); 17–2.04(3); 17–2.04(6)(a); 17–2.04(6)(b); 17–2.04(6)(d); 17–2.04(6) (e)2.a; 17–2.04(6)(e)3.b; 17–2.04(6)(f); and 17–2.04(6)(h).

(2) Compliance schedule. (i) November 1, 1973—Submit to the Administrator a final control plan, which describes at a minimum the steps which will be taken by the source to achieve compliance with the applicable regulations.

(ii) January 1, 1974—Negotiate and sign all necessary contracts for emission control systems or process modifications, or issue orders for the purchase of component parts to accomplish emission control or process modification.

(iii) February 1, 1974—Initiate onsite construction or installation of emission control equipment or process modification.

(iv) May 1, 1975—Complete onsite construction or installation of emission control equipment or process modification.

(v) July 1, 1975—Achieve compliance with the applicable regulations, and certify such compliance to the Administrator.

(vi) If a performance test is necessary for a determination as to whether compliance has been achieved, such a test must be completed by July 1, 1975. Ten

days prior to such a test, notice must be given to the Administrator to afford him the opportunity to have an observer present.

(vii) Five days after the deadline for completing paragraphs (b)(2) (ii) through (iv) in this section, certify to the Administrator whether the increment has been met.

(3) Except as provided in paragraph (b)(6) of this section, the owner or operator of any boiler or furnace of more than 250 million Btu per hour heat input subject to the requirements of Rules of the State of Florida, Department of Pollution Control, Air Pollution, subsections 17–2.04(6)(e)2. c. and d. contained as part of the Florida Implementation Plan shall notify the Administrator, no later than October 1, 1973, of his intent to utilize either low-sulfur fuel or stack gas desulfurization to meet these requirements.

(4) Any owner or operator of a stationary source subject to paragraph (b)(3) of this section who elects to utilize low-sulfur fuel shall be subject to the following compliance schedule:

(i) November 1, 1973—Submit to the Administrator a projection of the amount of fuel, by types, that will be substantially adequate to enable compliance with the applicable regulation on July 1, 1975, and for at least one year thereafter.

(ii) December 31, 1973—Sign contracts with fuel suppliers for fuel requirements as projected above.

(iii) January 31, 1974—Submit a statement as to whether boiler modifications will be required. If modifications will be required, submit plans for such modifications.

(iv) March 15, 1974—Let contracts for necessary boiler modifications, if applicable.

(v) June 15, 1974—Initiate onsite modifications, if applicable.

(vi) March 31, 1975—Complete onsite modifications, if applicable.

(vii) July 1, 1975—Achieve compliance with the requirements of Florida Air Pollution Rules subsections 17–2.04(6)(e)2. c. and d. and certify such compliance to the Administrator.

(viii) If a performance test is necessary for a determination as to whether compliance has been achieved, such a test must be completed by July 1, 1975. Ten days prior to such a test, notice must be given to the Administrator to afford him the opportunity to have an observer present.

(ix) Five days after the deadline for completing paragraphs (b)(4) (ii) through (vi) of this section, certify to the Administrator whether the increment has been met.

(5) Any owner or operator subject to paragraph (b)(3) of this section, who elects to utilze stack gas desulfurization shall be subject to the compliance schedule in paragraph (b)(2) of this section.

(6) (i) None of the above paragraphs shall apply to a source which is presently in compliance with applicable regulations and which has certified such compliance to the Administrator by October 1, 1973. The Administrator may request whatever supporting information he considers necessary for proper certification.

(ii) Any compliance schedule adopted by the State and approved by the Administrator shall satisfy the requirements of this paragraph for the affected source.

(iii) Any owner or operator subject to a compliance schedule in this paragraph may submit to the Administrator no later than October 1, 1973, a proposed alternative compliance schedule. No such compliance schedule may provide for final compliance after the final compliance date on the applicable compliance schedule of this paragraph. If promulgated by the Administrator, such schedule shall satisfy the requirements of this paragraph for the affected source.

(7) Nothing in this paragraph shall preclude the Administrator from promulgating a separate schedule for any source to which the application of the compliance schedule in paragraph (b)(2) or (4) of this section fails to satisfy the requirements of §§51.261 and 51.262(a) of this chapter.

[38 FR 16145, June 20, 1973, as amended at 38 FR 22740, Aug. 23, 1973; 38 FR 24333, 24342, Sept. 7, 1973; 38 FR 26325, Sept. 19, 1973; 40 FR 11724, 11725, Mar. 13, 1975; 51 FR 40676, 40677, Nov. 7, 1986; 54 FR 25258, June 14, 1989]

§ 52.525 General requirements.

(a) The requirements of §51.116(c) of this chapter are not met since the legal

authority to provide for public availability of emission data is inadequate.

(b) Regulation for public availability of emission data. (1) Any person who cannot obtain emission data from the Agency responsible for making emission data available to the public, as specified in the applicable plan, concerning emissions from any source subject to emission limitations which are part of the approved plan may request that the appropriate Regional Administrator obtain and make public such data. Within 30 days after receipt of any such written request, the Regional Administrator shall require the owner or operator of any such source to submit information within 30 days on the nature and amounts of emissions from such source and any other information as may be deemed necessary by the Regional Administrator to determine whether such source is in compliance with applicable emission limitations or other control measures that are part of the applicable plan.

(2) Commencing after the initial notification by the Regional Administrator pursuant to paragraph (b)(1) of this section, the owner or operator of the source shall maintain records of the nature and amounts of emissions from such source and any other information as may be deemed necessary by the Regional Administrator to determine whether such source is in compliance with applicable emission limitations or other control measures that are part of the plan. The information recorded shall be summarized and reported to the Regional Administrator, on forms furnished by the Regional Administrator, and shall be submitted within 45 days after the end of the reporting period. Reporting periods are January 1 to June 30 and July 1 to December 31.

(3) Information recorded by the owner or operator and copies of this summarizing report submitted to the Regional Administrator shall be retained by the owner or operator for 2 years after the date on which the pertinent report is submitted.

(4) Emission data obtained from owners or operators of stationary sources will be correlated with applicable emission limitations and other control measures that are part of the applicable plan and will be available at the appropriate regional office and at other locations in the state designated by the Regional Administrator.

[39 FR 34536, Sept. 26, 1974, as amended at 40 FR 55328, Nov. 28, 1975; 51 FR 40676, Nov. 7, 1986]

§ 52.526 Legal authority.

(a) The requirements of § 51.230(f) of this chapter are not met, since section 403.111 of the Florida Statutes could, in some circumstances, prohibit the disclosure of emission data to the public. Therefore, section 403.111 is disapproved.

[39 FR 34536, Sept. 26, 1974, as amended at 51 FR 40676, Nov. 7, 1986]

§ 52.527 Control strategy: General.

(a) Since the testing and research rule (FAC 17–1.585) submitted by the Florida Department of Environmental Regulation on April 7, 1980, as a revision of the plan does not meet the requirements of Section 110 of the Clean Air Act and the requirements of section 51.8 of this chapter, it is disapproved, and is not part of the plan.

(b) [Reserved]

[48 FR 52303, Nov. 17, 1983]

§ 52.528 Control strategy: Sulfur oxides and particulate matter.

(a) In a letter dated October 10, 1986, the Florida Department of Environmental Regulation certified that no emission limits in the State's plan are based on dispersion techniques not permitted by EPA's stack height rules.

(b) The variance granted to the Turkey Point and Port Everglades plants of Florida Power and Light Company from the particulate emission limits of the plan is disapproved because the relaxed limits would cause violation of the Class I increment for sulfur dioxide in the Everglades National Park. These plants must meet the 0.1#/MMBTU particulate limit of the plan.

[48 FR 33868, July 26, 1983, as amended at 54 FR 25455, June 15, 1989]

§ 52.529 [Reserved]

§ 52.530 Significant deterioration of air quality.

(a) EPA approves the Florida Prevention of Significant Deterioration (PSD) rule on condition that the State submit to EPA by December 14, 1983, a demonstration that its method of calculating increment consumption is consistent with Federal law and regulations. After receipt of the submittal and consideration of additional comments, EPA will, if it finds the State's method to be consistent, fully approve the Florida plan. If not, the State will change its regulation to implement EPA's approach.

(b) Pending final full approval of the State's PSD plan by EPA, if a source's application can be approved under Florida's rules, but not under EPA's rules, solely because of the different methods of calculating increment consumption, the source must obtain a PSD permit from EPA before beginning construction.

(c) All applications and other information required pursuant to § 52.21 of this part from sources located in the State of Florida shall be submitted to the Florida Department of Environmental Regulation, Bureau of Air Quality Management, Twin Towers Office Building, 2600 Blair Stone Road, Tallahassee, Florida 32301.

(d) The requirements of sections 160 through 165 of the Clean Air Act are not met since the Florida plan, as submitted, does not apply to certain sources. Therefore, the provisions of § 52.21 except paragraph (a)(1) are hereby incorporated by reference and made a part of the Florida plan for:

(1) Sources proposing to locate on Indian reservations in Florida; and

(2) Permits issued by EPA prior to approval of the Florida PSD rule.

[45 FR 52741, Aug. 7, 1980, as amended at 46 FR 17020, Mar. 17, 1981; 48 FR 52716, Nov. 22, 1983; 68 FR 11322, Mar. 10, 2003; 68 FR 74488, Dec. 24, 2003]

§ 52.532 Extensions.

(a) The Administrator hereby extends for 18 months (until July 1, 1980) the statutory timetable for submittal of Florida's plans to attain and maintain the secondary ambient standard for particulate matter in the Jacksonville and Tampa nonattainment areas (40 CFR 81.310).

[45 FR 2033, Jan. 10, 1980; 45 FR 28112, Apr. 28, 1980]

§ 52.533 Source surveillance.

The plan lacks test methods for several source categories. As required by § 52.12(c)(1) of this part, EPA test methods (found at 40 CFR part 60) will be used by EPA to determine compliance with the following emission limiting standards:

(a) Particulate emissions from citrus plants controlled by a scrubber and subject to the process weight table (submitted as 17–2.05(2) and reformatted as 17–2.610(1)1.a).

(b) TRS emissions from recovery furnaces at kraft pulp mills (submitted as 17–2.05(6)D and reformatted as 17–2.600(4)1).

(c) Sulfur dioxide emissions from fossil fuel steam sources (submitted as 17–2.05(6)E and reformatted as 17–2.600 (5) and (6)).

(d) Emissions from portland cement plants (submitted as 17–2.05(6)F and reformatted as 17–2.600(7)).

(e) Particulate and visible emissions from carbonaceous fuel burning equipment (submitted as 17–2.05(6)I and reformatted as 17–2.600(10)).

[47 FR 32116, July 26, 1982]

§ 52.534 Visibility protection.

(a) The requirements of section 169A of the Clean Air Act are not met because the plan does not include approvable procedures meeting the requirements of 40 CFR 51.305 and 51.307 for protection of visibility in mandatory Class I Federal areas.

(b) Regulations for visibility new source review. The provisions of § 52.28 are hereby incorporated and made part of the applicable plan for the State of Florida.

[51 FR 5505, Feb. 13, 1986]

§ 52.536 Original identification of plan section.

(a) This section identifies the original "State of Florida Air Implementation Plan" and all revisions submitted by Florida that were federally approved prior to July 1, 1998.

(b) The plan was officially submitted on January 27, 1972.

(c) The plan revisions listed below were submitted on the dates specified.

(1) Notification of adoption of standard procedures to test and evaluate air pollution sources submitted on April 10, 1972, by the Florida Department of Pollution Control.

(2) Miscellaneous non-regulatory additions to the plan submitted on May 5, 1972, by the Florida Department of Pollution Control.

(3) Compliance schedules submitted on June 1, 1973, by the Florida Department of Pollution Control.

(4) Compliance schedules submitted on August 6, 1973, by the Florida Department of Pollution Control.

(5) Revision of the State permit system to include indirect sources, Section III, Chapter 17–2, submitted on September 25, 1973, by the Florida Department of Pollution Control.

(6) Compliance schedules submitted on February 26, 1974, by the Florida Department of Pollution Control.

(7) Identification of ten AQMA's submitted on May 30, 1974, by the Florida Department of Pollution Control.

(8) Request that EPA defer identification of seven AQCR's submitted on September 25, 1974, by the Florida Department of Pollution Control.

(9) Additional information relating to the September 25, 1974, deferral request submitted on November 21, 1974, by the Florida Department of Pollution Control.

(10) Additional information relating to the September 25, 1974, deferral request submitted on January 9, 1975, by the Florida Department of Pollution Control.

(11) Revision to SO_2 emission limits for sulfur recovery plants and sulfuric acid plants submitted on February 12, 1975, by the Florida Department of Pollution Control.

(12) Request for deletion of four AQMA's from the AQMA identification list submitted on March 31, 1975, by the Florida Department of Pollution Control.

(13) Additional information supporting the March 31, 1975, deletion request submitted on April 9, 1975, by the Florida Department of Pollution Control.

(14) Additional information supporting the March 31, 1975, deletion request submitted on April 15, 1975, by the Florida Department of Pollution Control.

(15) Revised limits on sulfur dioxide emissions from fossil-fuel-fired steam generators were submitted on July 26, 1975, by the Department of Environmental Regulation. (No action is taken on these new limits as they apply to Duval County.)

(16) Revised ambient sulfur dioxide standards for Broward, Dade, and Palm Beach Counties, submitted on December 15, 1975, by the Florida Department of Environmental Regulation.

(17) Revised burning rule for cold or frost protection, submitted on January 14, 1976, by the Florida Department of Environmental Regulation.

(18) 1979 implementation plan revisions for nonattainment areas, (sulfur dioxide and ozone), submitted on April 30, 1979, as supplemented with August 27, 1979 and January 23, 1980 submittals by the Florida Department of Environmental Regulation.

(19) Variance from particulate, sulfur dioxide, and visible emission limits of the plan for units of Florida Power and Light Company's Cape Canaveral, Ft. Myers, Manatee, Riviera, and Sanford plants, submitted on August 31, 1979, and June 23, 1980, by the Florida Department of Environmental Regulation. (The particulate variance for the Port Everglades and Turkey Point plants is disapproved.)

(20) Limited variance from particulate, visible, and excess emissions limits granted to Florida Power and Light for Unit 4 of its Sanford station, submitted on February 4, 1980, by the Department of Environmental Regulation.

(21) The implementation plan revision developed by the Florida DER for the Jacksonville and Tampa TSP secondary nonattainment areas under Part D of Title I of the CAA was submitted for EPA's approval on February 27, 1981. The control strategies, as approved and adopted for the local program agencies (the Duval County Bio-Environmental Services Division and the Hillsborough County Environmental Protection Commission) were

submitted to EPA on March 16 and April 20, 1982, respectively.

(22) Pursuant to section 127 of the Clean Air Act, the Florida Department of Environmental Regulation submitted on April 15, 1980 a revision to the SIP concerning provisions for public notification and awareness.

(23) The air quality surveillance plan revision was submitted by the Florida Department of Environmental Regulation on December 11, 1979 and updates Florida's SIP to meet EPA requirements as set forth in 40 CFR part 58 (44 FR 27558, May 10, 1979).

(24) Reformatting of the Rules and Regulations portion of the Florida State Implementation Plan, submitted on May 8, 1978, by the Florida Department of Environmental Regulation.

(25) Revisions to the Sulfur Dioxide Emission Limiting Regulations applicable to specific Fossil Fuel Steam Generators, submitted on November 6, 1978, and February 3, 1979, by the Florida Department of Environmental Regulation.

(26) Request for delegation of authority for PSD submitted on September 22, 1980, by the Department of Environmental Regulation.

(27) Corrections in 1979 revisions for ozone nonattainment areas (Broward, Dade, Duval, Hillsborough, Orange, Palm Beach, and Pinellas Counties) submitted on May 28, 1980, by the Florida Department of Environmental Regulation to meet conditions of the conditional approval of March 18, 1980 (45 FR 17140).

(28) Revised limits on visible emissions from new sulfuric and nitric acid plants and mass particulate emission limits new Portland cement plants, submitted on July 16, 1976, by the Department of Environmental Regulation.

(29) Revised Opacity Limits for Monsanto Textile Co., Pensacola, Florida, submitted on December 19, 1979, by the Florida Department of Environmental Regulation.

(30) Operating permit for Stauffer Chemical Company, submitted on August 4, 1980, by the Florida Department of Environmental Regulation, to satisfy a condition of the approval of the 1979 revisions for the Pinellas County SO_2 nonattainment area.

(31) Revised ambient CO and TSP standards applicable in Broward, Dade, and Palm Beach Counties, submitted on August 6, 1976, by the Florida Department of Environmental Regulation.

(32) Set II VOC regulations, submitted on August 28, 1980, by the Florida Department of Environmental Regulation.

(33) Amendments to Florida's continuous monitoring rule, submitted on January 27, 1978, by the Department of Environmental Regulation.

(34) Revisions in Sections 17–2.21 and 17–2.32 of the Florida Administrative Code, adopting, in part, Federal NSPS and NESHAPS regulations, submitted by the Florida Department of Environmental Regulation on August 28, 1980.

(35) Revision of gasoline bulk plant rule, submitted on October 15, 1980, by the Florida Department of Environmental Regulation.

(36) Variance granted to Florida Power and Light Company for Unit 4 of its Sanford station, submitted on August 11, 1981, by the Department of Environmental Regulation. This variance is applicable until July 1, 1984, or until thirty months after EPAapproval, whichever, is later, for particulate, visible, and sulfur dioxide emissions.

(37) RACT emission limits and bubble provision for General Portland Inc., Tampa (FAC 17–2.650(2)(c)1.c.), submitted by the Florida Department of Environmental Regulation on August 11, 1981.

(38) Revocation of complex source rules, submitted on August 11, 1981, by the Florida Department of Environmental Regulation.

(39) Emission limits for sources burning carbonaceous fuel, submitted on May 22, 1974, and January 21, 1981, and reformatted on August 11, 1981, by the Florida Department of Environmental Regulation.

(40) Amendments to upset, startup and malfunction rule, submitted on August 12, 1976; revisions to section 17–2.05(14) FAC (excess emissions) and 17–2.05(6) Table II, E., FAC, fossil fuel steam generators-visible emissions, submitted on October 19, 1979; revision describing compliance testing for amendments in section 17–2.05 (14) and (6), submitted on September 24, 1980, by

the Department of Environmental Regulation.

(41) Reformatting of the rules and regulations portion of the Florida State Implementation Plan, submitted on August 11, 1981, by the Florida Department of Environmental Regulation.

(42) Revised open burning and frost protection rule and ambient lead standard, submitted on December 23, 1981, by the Florida Department of Environmental Regulation.

(43) On July 14, 1980, the Florida Department of Environmental Regulation (FDER) submitted a revision pertaining to deletion of the regulation on existing petroleum refineries in nonattainment areas and adding test methods for gasoline truck tanks, vapor collection systems, volatile organic compound (VOC) content of coating materials and gasoline bulk terminals for sources located in ozone nonattainment areas. On May 30, 1980, FDER submitted a revision establishing incremental compliance dates for existing VOC sources and extending final compliance dates for certain gasoline service stations. On December 23, 1981, FDER submitted a revision establishing test methods for certain VOC sources, adopting three definitions used in the test methods, and exempting six VOCs.

(44) Revised SO_2 limits for the Gannon Station of Tampa Electric Company, submitted on December 3, 1980, and associated methods of coal sampling and analysis, submitted on February 16, 1982, by the Florida Department of Environmental Regulation.

(45) Revision of the commencement date of the COM test burn period for Florida Power and Light Co.'s Sanford Plant, Unit 4, submitted on March 30, 1982, by the Florida Department of Environmental Regulation.

(46) Miscellaneous regulation changes, submitted on August 11, 1981, by the Florida Department of Environmental Regulation.

(47) Point source emission testing methods submitted on December 30, 1980, and May 29, 1981, by the Florida Department of Environmental Regulation.

(48) Revised ambient standards and episode alert level for ozone, submitted on April 26, 1982, by the Florida Department of Environmental Regulation.

(49) Changes in Open Burning and Frost Protection Fire Rule, submitted on November 15, 1982, by the Florida Department of Environmental Regulation.

(50) Miscellaneous amendents to Chapter 17–2, submitted on December 23, 1982, by the Florida Department of Environmental Regulation.

(51) Regulations for Prevention of Significant Deterioration, submitted on December 23, 1981, and December 23, 1982, by the Florida Department of Environmental Regulation. (No action is taken on the provisions for review involving vessel emissions or nonattainment areas.)

(52) Amendments to Chapter 17–2.650(1)(a) and 17–2.650(2)(a) submitted on February 18, 1983, by the Florida Department of Environmental Regulation. The amendments require all new and modified sources of particulate and volatile organic compounds located in nonattainment areas or in areas of influence for particulate matter to utilize Reasonably Available Control Technology (RACT) if they are not subject to Lowest Achievable Emissions Rate (LAER) provisions.

(53) Changes to Florida Administrative Code (FAC), Chapter 17–2, submitted on August 12, 1983, and June 13, 1984, by the Florida Department of Environmental Regulation (FDER).

(i) Incorporation by reference—

(A) August 12, 1983, letter and April 17, 1984, certification of Administrative Rules filed with the Department of State, from the Florida Department of Environmental Regulation.

(B) Amendments to Florida Administrative Code Rules 17–2.100(132), 17–2.300 (1) and (2), 17–2.400 (1) through (5), 17–2.500(2)(e)3, 17–2.500(2)(e)4.c.(i), 17–2.500(4)(b), 17–2.650(1)(a). These revisions were adopted on July 1, 1983, by the State of Florida Department of Environmental Regulation.

(C) Amendments to Florida Administrative Code Rules 17–2.410 (1) and (3), and 17–2.460, approved on April 17, 1984, by the State of Florida Department of Environmental Regulation.

(ii) Additional material—none.

(54) TSP variance for Jacksonville Kraft Paper Company, submitted on

September 2, 1983, by the Florida Department of Environmental Regulation.

(55) State implementation plan for lead, submitted by the Department of Environmental Regulation on September 17, 1984.

(i) Incorporation by reference—

(A) Amendments to Florida Administrative Code, Chapter 17.2–100, Definitions, and 17.2–500 and 510, Applicability (for New Source Review), adopted by the State on January 25, 1984, and September 17, 1984 letter from the Florida Department of Environmental Regulation to EPA.

(ii) Additional material—

(A) Narrative submittal, including an attainment demonstration.

(B) Emissions inventories for lead sources.

(56) Amendments to the Florida Administrative Code (FAC) submitted by the Secretary of the Florida Department of Environmental Regulation (FDER) on May 30, 1985, which deals with source sampling.

(i) Incorporation by reference.

(A) Amendments to 17–2.700 FAC, which deals with source sampling procedures and conditions, adopted on April 3, 1985, by the FDER.

(ii) Additional material.

(A) None.

(57) Changes to Florida Administrative Code (FAC) Chapter 17–2, submitted on May 31, 1985, by the Florida Department of Environmental Regulation (FDER).

(i) Incorporation by reference.

(A) May 31, 1985 letter from the Florida DER, and Amendments to FAC Chapters 17–2.100, 17–2.215, 17–2.540, 17–2.600, 17–2.700 and 17–2.753 which were adopted by the FDER on April 11, 1985. Allow sulfur in the pelletized form to be shipped and handled in the State. Also establish new source review requirements, emission estimating procedures, emission limiting standards, and test procedures for elemental sulfur storage and handling facilities.

(ii) Additional information.

(A) None.

(58) Visibility new source review regulations were submitted to EPA on September 23, 1985.

(i) Incorporation by reference.

(A) Letter of September 23, 1985, from the State of Florida Department of Environmental Regulation, and amendments to Rule 17–2.100 FAC (Definitions), Rule 17–2.220 FAC (Public Notice and Comment), and Rule 17–2.500 FAC (Prevention of Significant Deterioration), adopted by the Florida Department of Environmental Regulation on July 25, 1985.

(59) Post-1982 CO SIP revision for Dade County, submitted on September 19, 1986, by the Florida Department of Environmental Regulation.

(i) Incorporation by reference—none.

(ii) Other material.

(A) Narrative description of analysis performed for CO.

(B) Analysis of East Flagler Street Carbon Monoxide Exceedances—Downtown Miami.

(C) Description of Methodologies to Assess Eight-Hour Nighttime Carbon Monoxide Exceedances.

(D) Identification and Analysis of Potential Carbon Monoxide Hotspots in Dade County, Florida.

(E) Analysis of Transportation Control Measures (TCMs), Dade County/Miami.

(60) Stack height regulations were submitted on July 1 and November 19, 1986, by the Florida Department of Environmental Regulation.

(i) Incorporation by reference.

(A) Revised FAC 17–2.100(177), added FAC 17–2.100(178), added FAC 17–2.500(5)(h)6., and added FAC 17–2.510(4)(f), adopted on May 8, 1986.

(B) Revised FAC 17–2.100(61) and revised FAC 17–2.270, adopted on September 30, 1986.

(ii) Other material—none.

(61) [Reserved]

(62) Consent Order was submitted by EPA on August 14, 1986, by the Florida Department of Environmental Regulation.

(i) Incorporation by reference.

(A) A Consent Order for Smart-Pak Industries was adopted by the Florida Department of Environmental Regulation on June 17, 1986.

(ii) Additional material—none.

(63) Florida plan for the protection of visibility in Federal Class I areas submitted to EPA on August 27, 1987, by

the Florida Department of Environmental Regulation (FDER) to satisfy the Part 2 visibility requirements.

(i) Incorporation by reference.

(A) May 26, 1988, letter from the Florida Department of Environmental Regulation, and pages 20 and 21 of the Florida plan for the protection of visibility in Federal Class I areas containing the periodic review requirements satisfying 40 CFR 51.306(c), adopted by the Florida Department of Environmental Regulation on August 27, 1987.

(ii) Additional material.

(A) Narrative SIP titled "The Florida Plan for the Protection of Visibility in Federal Class I Areas."

(64) [Reserved]

(65) Changes to the Florida Administrative Code (FAC), Chapter 17–2, submitted to EPA on November 19, 1986, and June 12, 1987, by the Florida Department of Environmental Regulations.

(i) Incorporation by reference.

(A) November 19, 1986, and June 12, 1987, letters from the Florida Department of Environmental Regulation.

(B) Amendments to Florida Administrative Code Rules 17–2.100(6), (21) and (118); 17–2.210 introductory text, (1) and (3)(r); 17–2.220(1), (2)(a)–(h); 17–2.300(3)(c)1. and (3)(c)2.; 17–2.310 introductory text; 17–2.450(1)(a) and (2)(a);17–2.500(2)(e)4.a. (i) and (ii), (4)(a)1.a. and (4)(b)1.; 17–2.600(1)(d); and 17–2.700(2)(a)3.; Tables 500–1, 500–2, 500–3, Table 700–1 and Table 700–2. These revisions were adopted on July 1, 1983, and September 30, 1986, by the FloridaDepartment of Environmental Regulation.

(ii) Additional material—none.

(66) PM_{10} revisions for the Florida State Implementation FPlan were submitted on May 19, 1988 and July 18, 1989, by the Florida Department of Environmental Regulation. Miscellaneous corrective revisions were also submitted by the Florida Department of Environmental Regulation on July 18, 1989.

(i) Incorporation by reference.

(A) Revised regulations which became state-effective on May 30, 1988:

17–2.100—Definitions: (16)(a), (17), (61), (143), (173)(b), (202)
17–2.300—Ambient Air Quality Standards: (3)(b)
17–2.310—Maximum Allowable Increases (Prevention of Significant Deterioration Increments): (1)(a) and (2)(a)
17–2.330—Air Alert: (1)(b) thru (f)
17–2.340—Air Warning: (1)(b)
17–2.350—Air Emergency: (1) Introductory paragraph, (1)(b) thru (e)
17–2.400—Procedures for Designation and Redesignation of Areas: (1)(b)
17–2.410—Designation of Areas Not Meeting Ambient Air Quality Standards (Nonattainment Areas): (2)(b), (3) thru (7)
17–2.420—Designation of Areas Meeting Ambient Air Quality Standards (Attainment Areas): (2)
17–2.430—Designation of Areas Which Cannot Be Classified As Attainment or Nonattainment (Unclassifiable Areas): (1)
17–2.450—Designation of Prevention of Significant Deterioration (PSD) Areas: (1) Introductory paragraph and subparagraph (a)
17–2.460—Designation of Air Quality Maintenance Areas: (4)
17–2.500—Prevention of Significant Deterioration: (2)(e)4.b., (4)(e)3., (5)(f)3, Table 500–2 and Table 500–3
17–2.600—Specific Source Emission Limiting Standards: (11)(a)3., 7., 9., (11)(b)3.a., (11)(b)5.

(B) Revised regulations which became state-effective on July 9, 1989:

17–2.100—Definitions: (37) and (145)
17–2.210—Permits Required: (1) and (3)
17–2.260—Air Quality Models
17–2.300—Ambient Air Quality Standards: (2)
17–2.340—Air Warning: (1)(c)
17–2.410—Designation of Areas Not Meeting Ambient Air Quality Standards (Nonattainment Areas): (1) and (2)(a)
17–2.420—Designation of Areas Meeting Ambient Air Quality Standards (Attainment Areas): (3) thru (5)
17–2.430—Designation of Areas Which Cannot Be Classified As Attainment or Nonattainment (Unclassifiable Areas): (2) Introductory Paragraph
17–2.460—Designation of Air Quality Maintenance Areas: (1) and (2)
17–2.500—Prevention of Significant Deterioration: (1)(a)—(c)
17–2.520—Sources Not Subject to Prevention of Significant Deterioration or Nonattainment Requirements.: Title
17–2.540—Source Specific New Source Review Requirements: (2)(a)
17–2.600—Specific Emission Limiting and Performance Standards: Title, Introductory paragraph, (1)(a)1., (2)(a)2.a.; (2)(b)1.; (4)(b)2.; (5)(a)1., 2., 3a.(i), and 4. Introductory paragraph; (5)(b); (6); (12)(a)1.; (12)(a)7.; (12)(b); (12)(c) Introductory paragraph; (12)(c)4., (13); and (14)
17–2.610—General Particulate Emission Limiting Standards: Table 610–1 and (3)(c)7.
17–2.650—Reasonably Available Control Technology (RACT): (1)(c)3.a.(ii) and (iii); (1)(f)

introductory paragraph; (1)(f)10.c.(i) and (iv); (2)(a)1., (b), (c) Introductory paragraph, (c)1.b. and c., (c)2.b.(ii), (c)3.b.(ii), (c)4.b, (c)5.a. Introductory paragraph, (c)5.a.iv. and v., (c)5.b.(i)–(iv), (c)6.b.(i) and (iii), (c)7.b.(i) and (ii), (c)8. thru 10., (c)11.a. Introductory paragraph, (c)11.a.(vi), (c)11.b., and (c)12.; (2)(d)2.a., b. and c.

17–2.660—Standard of Performances for New Stationary Sources (NSPS): (2)(b)

17–2.700—Stationary Point Source Emissions Test Procedures: (1)(b) Introductory paragraph; (1)(d)1.b.(i), (2)(a)2., (2)(a)4. thru 9.; Table 700–1; (4)(c)1.c.(i) and (ii); (6)(a)1.a., (b)1., (b)2.a. and b., (b)3.a. and b., (b)5., (b)6.a. thru c.,(b)7.b. thru e., (b)10., (b)(12), (b)16.b. and c., (b)18 thru 22, (b)24. thru 31., and (c)6.d.

17–2.710—Continuous Monitoring Requirements: (1)(a)2.

17–2.960—Compliance Schedules for Specific Source Emission Limiting Standards: (1)(c) and (d) Introductory paragraph; (1)(e).

(ii) Additional material.

(A) Letter of May 19, 1988, from the Florida Department of Environmental Regulation (FDER) submitting the SIP revisions.

(B) Letter of July 18, 1989, from the FDER submitting additional SIP revisions.

(67) [Reserved]

(68) Revisions which were submitted on August 16 and November 8, 1989, concerning Biological Waste Incinerators

(i) Incorporation by reference. (A) Revisions to Florida Administrative Code, Chapter 17–2 which became state effective on August 30, 1989.

17–2.100 Definitions; 27, 28, 181, and 182

17.2.600 Specific Source Emission Limiting Standards: (1)(a)1., (1)(b) Introductory paragraph, (1)(c) Introductory paragraph, (1)(d)

17.2.700 Stationary Point Source Emissions Test Procedures:

Table 700–1: 17–2.600(1)(a)–(e)

17.2.710 Continuous Monitoring Requirements: paragraph (5)

(B) Revisions to Florida Administrative Code, chapter 17–2 which became state effective on November 9, 1989.

17–2.100 Definitions: 26 and 175

(ii) Additional material. (A) Letter of August 16, 1989, from the Florida Department of Environmental Regulation submitting the SIP revision.

(B) Letter of November 8, 1989, from the Florida Department of Environmental Regulation submitting the amendments to the August 16, 1989, submittal.

(69) Vehicle Anti-tampering and visible emissions regulations (Chapter 17–243 and Chapter 17–244 of the Florida Administrative Code respectively) which were submitted to EPA on March 20, 1990, and revisions to Chapter 17–243 submitted on June 18, 1990.

(i) *Incorporation by reference.*

(A) New Florida Administrative Code (FAC) regulations 17–243 (Tampering with Motor Vehicle Pollution Control Equipment) and 17–244 (Visible Emissions from Motor Vehicles) which became state effective on February 21, 1990.

(B) Revisions to FAC Chapter 17–243 (Tampering with Motor Vehicle Air Pollution Control Equipment) which became state effective May 29, 1990.

(ii) *Other material.*

(A) March 20, 1990, and June 18, 1990, letters from the Florida Department of Environmental Regulation.

(70) Revisions to chaper 17–2 of the Florida Administrative Code which were submitted on July 12, 1990.

(i) Incorporation by reference.

(A) Amendments to the following rules of F.A.C. which become effective on July 13, 1990:

17–2.100 (21), (22), (119) and (126);

17–2.310 (preamble), (1)(c), (2)(c), and (3)(c);

17–2.450 (1)(a), (2)(a), and (3); and

17–2.500 (2)(e)4.b., (3)(f)3., 4(a)3., 4(b)1. thru 3.a.

introductory paragraph, 4(b)3.b. thru d., 4(b)3.e. introductory paragraph and 4(b)3.e.(ii).

(ii) Other material.

(A) Letter of July 12, 1990, from the Florida Department of Environmental Regulation.

(B) Minimum program elements.

(71) The Florida Department of Environmental Regulation submitted an Order authorizing research and testing by the Florida Power & Light Company and the operating permit for the Orimulsion Fuel Test Burn at the Sanford Power Plant Unit No. 4 to EPA on October 11, 1990.

(i) *Incorporation by reference.* (A) Florida Department of Environmental Regulation Order authorizing research and testing by the Florida Power & Light Company adopted on October 4, 1990.

(B) Florida Power & Light operating permit number AC 64–180842, PSD–FL–150 which becomes State-effective on January 7, 1991.

(ii) *Other materials.* (A) Letter of October 11, 1990, from the Florida Department of Environmental Regulation.

(72) Revisions to Chapter 17–2 of the Florida Administrative Code which were submitted on August 16, 1989, and August 27, 1990.

(i) Incorporation by reference.

(A) Amendments to FAC 17–2.100(41), (153) and (217); 17–2.510(2)(a) introductory paragraph, 17–2.650(1)(a), (1)(b) title, (1)(b)2., (1)(c)1, (1)(d), (1)(e), (1)(f) introductory paragraph, (1)(f)2.a., (1)(f)3.a., (1)(f)5.b., (1)(f)6.a.(i), and (1)(f)14.a.(iii); which became State effective on August 30, 1989.

(B) Amendments to FAC 17–2.100(220); 17–2.650(1)(b)2, (1)(d), (1)(e), (1)(f)4.a., and (1)(f)16.a.; 17–2.700 TABLE 700–1; and 17–2.965, which became State effective on September 13, 1990.

(ii) Other material—None.

(73) Regulations for a centralized vehicle Inspection/Maintenance (I/M) program. These revisions were submitted by the State of Florida, through the Florida Department of Environmental Regulation (FDER) on March 20, 1989.

(i) Incorporated by reference.

(A) Florida Administrative Code, Chapter 17–242, Mobile Source—Vehicle Emission Standards and Test Procedures Rule which were adopted on January 31, 1989.

(ii) Other material.

(A) Letter of March 20, 1989, from the Florida Department of Regulation (FDER).

(74) Vehicle Anti-tampering revisions (Chapter 17–243 of the Florida Administrative Code) which were submitted to EPA on January 24, 1991.

(i) *Incorporation by reference.*

(A) Revisions to FAC Chapter 17–243 (Tampering with Motor Vehicle Air Pollution Control Equipment) which became state effective January 2, 1991, as follows:

17–243.200—Definitions: (1); (2) Introductory Paragraph and (a); and (3) Introductory paragraph
17–243.300—Exemptions: (2); (3) Introductory paragraph and (b); (4) Introductory paragraph, (b), (c) and (d)
17–243.400—Prohibitions
17–243.500—Certification: (1)(a) thru (d)
17–243.600—Enforcement: (2); (3) Introductory paragraph and (b), (4); (6); and (7)

(ii) *Other material.*

(A) Letter dated January 24, 1991, from the Florida Department of Environmental Regulation.

(75) Revisions to F.A.C. Chapter 17–242 (Motor Vehicle Emission Standards and Testing Procedures) which were submitted to EPA on March 25, 1991.

(i) Incorporation by reference.

(A) Revision to F.A.C. 17–242 (Motor Vehicle Emission Standards and Testing Procedures) which were adopted March 1, 1991.

Revision to F.A.C. Chapter 17–242 as follows:
17–242.100; and
17–242.200 (1), (6), (9), (11), (12), (15), (18), (26), (29) and (30); and
17–242.300; and
17–242.400; and
17–242.500; and
17–242.600 (1–3(a)(3)), 3(a)(6–10), 5(a–f), 5(h), 6 and
17–242.700; and
17–242.800; and
17–242.900 (1), (2)(a), (2)(b), (2)(d) through (2)(g), (3), (4) and (5)

(ii) Other material.

(A) Letter of March 25, 1991, from the Florida Department of Environmental Regulation.

(76) The Florida Department of Environmental Regulation submitted revisions to chapter 17–2 of the Florida Administrative Code which were submitted on January 14, 1992. These revisions incorporate Capture Efficiency Test Procedures for Volatile Organic Compound sources into the Florida Administrative Code.

(i) Incorporation by reference.

(A) Florida Administrative Code (FAC) 17–2.100 (32), (37), (38), (39), (40), (60), (61), (68), (95), (101), (117), (155), (163), (180), (218), (237), effective December 31, 1991.

(B) FAC 17–2.650(1)(f) Introductory paragraph, 1., 2., 3., 4., 5., 6., 7., 12., 14., 15., and 16., effective December 31, 1991.

(C) FAC 17–2.700(6)(c)7, effective December 31, 1991.

(D) FAC 17–2.700(7), effective December 31, 1991.

(ii) Other material—None.

(77) [Reserved]

(78) State Implementation Plan for chapters 17–296, and 17–297, Soil Thermal Treatment and Recodification of

the Florida Administrative Code, chapter 17–2, Air Pollution, submitted by the Department of Environmental Regulation on November 23, 1992, and January 11, 1993, respectively.

(i) Incorporation by reference.

(A) The following chapters of the Florida Administrative Code, effective October 15, 1992:

(*1*) 17–209, Local Air Pollution Programs,

(*2*) 17–210, Stationary Sources General Requirements,

(*3*) 17–212, Preconstruction Review,

(*4*) 17–252, Gasoline Vapor Control,

(*5*) 17–272, Ambient Air Quality Standards,

(*6*) 17–273, Air Pollution Episodes,

(*7*) 17–275, Air Quality Areas,

(*8*) 17–296, Stationary Sources—Emission Standards,

(*9*) 17–297, Stationary Sources—Emission Monitoring.

(B) Revisions to the following Florida Administrative Code: Chapters 17–296.200(162), 17–296.415, table 297.330–1: entry 17–296.415, 17–297.500(6), Soil Thermal Treatment, effective November 17, 1992.

(ii) Other material. None.

(79) Revisions to the F.A.C. Chapter 17–252 which were submitted by the Florida Department of Environmental Protection on January 8, 1993. The submittal revised the regulations for vapor recovery.

(i) Incorporation by reference.

(A) Revision to F.A.C. 17–252 which was effective on February 2, 1993: 17–252.100; 17–252.200(2–12); 17–252.300; 17–252.400; 17–252.500; 17–252.800; 17–252.900

(ii) Other material.

(A) Letter of January 8, 1993, from the Florida Department of Environmental Regulation.

(80) The Florida Department of Environmental Regulation has submitted revisions to chapter 403.0852 of the Florida Statutes on February 24, 1993. These revisions address the requirements of section 507 of title V of the CAA and establish the Small Business Stationary Source Technical and Environmental Assistance Program (PROGRAM).

(i) Incorporation by reference. Florida Statutes 403.031(20), 403.0852 (1), (2), (3), (4), 403.0872(10)(b), 403.0873, 403.8051, effective on April 28, 1992.

(ii) Other material. None.

(81) The maintenance plan for Duval County submitted by the Florida Department of Environmental Protection on June 23, 1993, as part of the Florida SIP.

(i) Incorporation by reference.

(A) Duval County Ozone Ten Year Maintenance Plan including Emissions Inventory Summary and Projections effective on August 23, 1994.

(ii) Other material. None.

(82) Revisions to chapter 17–296 and 17–297 of the Florida Administrative Code (FAC) regarding animal crematories and human crematories submitted on October 8, 1992, and December 9, 1993, respectively.

(i) Incorporation by reference.

(A) Amendments to FAC 17–2.600(d) and 17–2.700 and Table 700–1, adopted September 24, 1992.

(B) Amendments to FAC 17–296.200(84), 17–296.401(5), 17–297.330, Table 17–297.330–1 and 17–297.500(7), adopted November 12, 1992.

(ii) Additional information. None.

(83) Revisions to Chapter 17–296 of the Florida Administrative Code (FAC) regarding Stationary Sources submitted on July 2, 1993.

(i) Incorporation by reference.

(A) Amendments to FAC 17–296.405 and 17–296.406, adopted June 9, 1993.

(84) Revisions to Florida Administrative Code Chapters 1709242 and 1709275 which were effective February 2, 1993.

(i) Incorporation by reference.

(A) Revisions to Florida Administrative Code 1709242 and 1709275 which were effective February 2, 1993.17.242.200(2), (16), (22), (250926), (29), (31); 17.242.400(2093), (4)(a), (4)(b), (5) introductory text and (5)(a);1709242.500(1)(a-b), (3)(b)1.; 1709242.600(2), (3) introductory text, (3)(a)1., (3)(a)7., (3)(c), (5)(d); 1709242.700 (4) introductory text, (4)(a), (4)(c-d), (5); 1709242.800(1), 1709242.900(1)(b), (2), (3)(c), (4); 1709275.100; 1709275.200 introductory text, (15), (170918); 275.300(1)(c), (3) introductory text,(3)(a), (3)(b)introductory text, (3) introductory text, (3)(b) introductory text, (3)(b)2. introductory text, (3)(b)2.b.-c., (3)(b)3. introductory text, (3)(b)3.a.; 17.275.400(2095); 1709275.410(1093),(6); 1709275.420(1);1709275.600(1),(2) introductory text, (2)(b-c)

(ii) Other material. None.

(85) Revisions to the State of Florida State Implementation Plan (SIP) concerning emission statements were submitted on January 12, 1993 by the Florida Department of Environmental Protection.

(i) Incorporation by reference.

(A) Revisions to the following Florida Regulations were effective February 9, 1993. F.A.C. 17–210.100; 17–210.200(47), (49), (52) and (64); 17–210.370; and 17–210.900.

(ii) Other material. None.

(86) The maintenance plan for Southeast Florida submitted by the Florida Department of Environmental Protection on November 8, 1993, as part of the Florida SIP.

(i) Incorporation by reference.

(A) Southeast Florida Ozone Ten Year Maintenance Plan including Emissions Inventory Summary and Projections effective on November 8, 1993.

(ii) Other material. None.

(87) Revisions to the Florida State Implementation Plan submitted by the Department of Environmental Protection on December 10, 1996.

(i) Incorporation by reference. Section 62–210.200(1), (29)(g), (77)(a), (b), (137), (145)(a)29., (167), (259)(a)3–5 and (b), (309(y), and 62–210.220 of the Florida SIP effective October 15, 1996.

(ii) Other material. None.

(88) Revisions to the F.A.C. Chapters 17–212 and 17–296 which were effective February 2, 1993

(i) Incorporation by reference.

(A) Revision to F.A.C. 17–212, and 17–296 which were effective on : February 2, 1993. 17–212.100; 17–212.200 introductory paragraph, (5),(12),(57),(63)(e),(64),(75); 17–212.400 introductory paragraph,(2) introductory paragraph, (2)(f)3; 17–212.500(2)(a), (2)(a) introductory paragrpah, 2(a)2. introductory paragraph, 2(a)2.a., (2)(a)2.e.4.,(4)(b), (4)(c),(4)(d)1., (4)(d)2.a.–c., (4)(g), (5)(a), (5)(b)2.,4.–7.. 9.;17–296.200(13), (50), (198); 17.500 introductory paragraph,(1); 17–296.570(3).

(B) Revision to F.A.C. 17–296 which became effective on April 17, 1994. 17–296.500(1)(b), (2)(a)(1), (2)(b)(1), (2)(c), (6); 17–296.570(1–2), (4).

(ii) Other material.

(A) Letters of January 8, 1993 and April 25, 1994, from the Florida Department of Environmental Protection.

(89) The maintenance plan for Tampa, Florida, submitted by the Florida Department of Environmental Protection on February 7, 1995.

(i) Incorporation by reference. Tampa Redesignation Request and Attainment/Maintenance Plan for the Tampa Bay Florida Ozone Nonattainment Area including Emissions Inventory Summary and Projections adopted on November 16, 1994.

(ii) Other material. None.

(90) Revisions to Chapter 62–210, Stationary Sources—General Requirements, submitted by the Florida Department of Environmental Protection on December 21, 1994 and April 24, 1995.

(i) Incorporation by reference.

(A) Revised Sections 62–210.300, "Permits Required", except 62–210.300(2)(b)1., and 62–210.350, "Public Notice and Comment", effective November 23, 1994. Revised Section 62–210.300(2)(b)1., effective April 18, 1995.

(91) The State of Florida submitted revisions to the FDEP Administrative Code for the Air Pollution Control Program on August 18, 1994. These revisions provide for the control of lead emissions from facilities in the State of Florida, and will replace the Federal Implementation Plan requirements codified in 40 CFR 52.535.

(i) Incorporation by reference. Chapters 17–296.200 (97) and (163) introductory paragraph and (e), 17–296.600–605 effective on August 8, 1994.

(ii) Other material. None.

(92) The Florida Department of Environmental Protection has submitted revisions to the Florida State Implementation Plan on August 12, 1994. These revisions address including the Small Business Stationary Source Technical and Environmental Program in the Florida Administrative Code, Chapter 17–202.

(i) Incorporation by reference.

(A) Chapter 17–202, Small Business Stationary Source Technical and Environmental Compliance Assistance Program adopted on June 30, 1994.

(ii) Additional material. None.

(94) Revisions to the Florida SIP regarding perchloroethylene dry cleaning facilities submitted on April 24, 1995.

(i) Incorporation by reference.

Sections 62–210.200(17) and (48)(c); 62–210.300(2)(b) and (4); 62–296.200(58); and 62–296.412 of the F.A.C., effective April 18, 1995.

(ii) Other material. None.

(95) The maintenance plan for Southeast Florida submitted by the Florida Department of Environmental Protection on November 15, 1995, as part of the Florida SIP.

(i) Incorporation by reference. Revision of the Attainment/Maintenance Plan for the Southeast Florida Ozone Nonattainment Area (Dade, Broward, and Palm Beach Counties) effective on November 15, 1995.

(ii) Other material. None.

(96) Nine variances to F.A.C. Chapter 62–252 were submitted by the Florida Department of Environmental Protection on April 8, 1996. The submittal granted variances from the regulations for vapor recovery for nine facilities.

(i) Incorporation by reference.

(A) Florida Department of Environmental Protection Order Granting Variance effective February 28, 1996 for: FAC #508514770; FAC #508944721; FAC #508630588; FAC #50863023; FAC #508514723; FAC #508514722; FAC #508514484; FAC #508513991; FAC #508841861.

(ii) Other material. None.

(97) General permit rules and exclusionary rules for the State of Florida Department of Environmental Protection submitted by the Florida Department of Environmental Protection as part of the Florida SIP.

(i) Incorporation by reference.

(A) Florida Administrative Code Regulation 62–210.300(3)(c) and 62–210.300(4) of the Florida SIP as adopted by the Secretary of the Florida Department of Environmental Protection on July 26, 1996 and which became effective on August 15, 1996.

(ii) Other material. None.

(98) Revisions to the Florida SIP to amend the gasoline tanker truck leak testing procedures, change the requirements to submit test results and update the gasoline tanker truck leak test form which were submitted on September 25, 1996.

(i) Incorporation by reference.

62–252.500(3) and 62–252.900, effective September 10, 1996.

(ii) Other material. None.

(99) [Reserved]

(100) Revisions to Chapter 62–204, Stationary Sources—General Requirements, of the Florida SIP submitted by the Department of Environmental Protection on November 22, 1994.

(i) Incorporation by reference. Sections 62–204.100, 62–204.200, and 62–204.400 of the Florida SIP, effective November 30, 1994.

(ii) Other material. None.

(101) Revisions to the Florida SIP adding SO_2 permits to specify SO_2 emission limits for three sources in Duvall County, Florida submitted on January 28, 1997.

(i) Incorporation by reference. The following source specific SO_2 permits of the Florida Department of Environmental Protection.

SO_2 Permits:

(A) Permit AO16–169138 SCM Glidco Organics conditions 1 through 18.

(B) Permit AO16–222421 Anheuser-Busch, Inc., conditions 1 through 18.

(C) Permit AO16–185805 The Celotex Corporation conditions 11 through 16.

(ii) Other material. None.

[37 FR 10858, May 31, 1972. Redesignated at 64 FR 32348, June 16, 1999]

EDITORIAL NOTE: For FEDERAL REGISTER citations affecting § 52.536, see the List of CFR Sections Affected, which appears in the Finding Aids section of the printed volume and on GPO Access.

Subpart L—Georgia

§ 52.569 [Reserved]

§ 52.570 Identification of plan.

(a) *Purpose and scope.* This section sets forth the applicable State implementation plan for Georgia under section 110 of the Clean Air Act, 42 U.S.C. 7401, and 40 CFR part 51 to meet national ambient air quality standards.

(b) *Incorporation by reference.*

(1) Material listed in paragraph (c) and (d) of this section with an EPA approval date prior to April 10, 2003, was approved for incorporation by reference by the Director of the Federal Register in accordance with 5 U.S.C. 552(a) and 1 CFR part 51. Material is incorporated as it exists on the date of the approval, and notice of any change in the material will be published in the

FEDERAL REGISTER. Entries in paragraphs (c) and (d) of this section with EPA approval dates after April 10, 2003, will be incorporated by reference in the next update to the SIP compilation.

(2) EPA Region 4 certifies that the rules/regulations provided by EPA in the SIP compilation at the addresses in paragraph (b)(3) are an exact duplicate of the officially promulgated State rules/regulations which have been approved as part of the State implementation plan as of April 10, 2003.

(3) Copies of the materials incorporated by reference may be inspected at the Region 4 EPA Office at 61 Forsyth Street, SW., Atlanta, GA 30303; or at the EPA, Office of Air and Radiation Docket and Information Center, Room B–108, 1301 Constitution Avenue, (Mail Code 6102T) NW., Washington, DC 20460; or at the National Archives and Records Administration (NARA). For information on the availability of this material at NARA, call 202–741–6030, or go to: *http://www.archives.gov/federal_register/code_of_federal_regulations/ibr_locations.html.*

(c) *EPA approved regulations.*

EPA APPROVED GEORGIA REGULATIONS

State citation	Title/subject	State effective date	EPA approval date	Explanation
391–3–1–.01	Definitions	12/30/02.	07/09/03, 68 FR 40789	
391–3–1–.02	Provisions.			
391–3–1–.02(1)	General Requirements	03/20/79.	09/18/79, 44 FR 54047.	
391–3–1–.02(2)	Emission Standards	06/23/96.	06/27/96, 61 FR 33372.	
391–3–1–.02(2)(a)	General Provisions	01/09/91.	01/26/93, 58 FR 6093.	
391–3–1–.02(2)(b)	Visible Emissions	01/17/79.	09/18/79, 44 FR 54047.	
391–3–1–.02(2)(c)	Incinerators	06/15/98.	12/02/99, 64 FR 67491.	
391–3–1–.02(2)(d)	Fuel-burning Equipment	01/17/79.	09/18/79, 44 FR 54047.	
391–3–1–.02(2)(e)	Particulate Emission from Manufacturing Processes.	01/17/79.	09/18/79, 44 FR 54047.	
391–3–1–.02(2)(f)	Normal Superphosphate Manufacturing Facilities.	01/17/79.	09/18/79, 44 FR 54047.	
391–3–1–.02(2)(g)	Sulfur Dioxide	07/17/02.	07/09/03, 68 FR 40789.	
391–3–1–.02(2)(h)	Portland Cement Plants	01/17/79.	09/18/79, 44 FR 54047.	
391–3–1–.02(2)(i)	Nitric Acid Plants	01/17/79.	09/18/79, 44 FR 54047.	
391–3–1–.02(2)(j)	Sulfuric Acid Plants	01/17/79.	09/18/79, 44 FR 54047.	
391–3–1–.02(2)(k)	Particulate Emission from Asphaltic Concrete Hot Mix Plants.	01/17/79.	09/18/79, 44 FR 54047.	
391–3–1–.02(2)(l)	Conical Burners	01/17/79.	09/18/79, 44 FR 54047.	
391–3–1–.02(2)(m)	repealed	06/30/75.	10/03/75, 40 FR 45818.	
391–3–1–.02(2)(n)	Fugitive Dust	01/17/79.	09/18/79, 44 FR 54047.	
391–3–1–.02(2)(o)	Cupola Furnaces for Metallurgical Melting	01/27/72.	37 FR 10842.	
391–3–1–.02(2)(p)	Particulate Emissions from Kaolin and Fuller's Earth Processes.	12/16/75.	08/20/76, 41 FR 35184.	
391–3–1–.02(2)(q)	Particulate Emissions from Cotton Gins	01/27/72.	05/31/72, 37 FR 10842.	
391–3–1–.02(2)(r)	Particulate Emissions from Granular and Mixed Fertilizer Manufacturing Units.	01/27/72.	05/31/72 37, FR 10842.	
391–3–1–.02(2)(t)	VOC Emissions from Automobile and Light Duty Truck Manufacturing.	12/20/94.	02/02/96, 61 FR 3817.	
391–3–1–.02(2)(u)	VOC Emissions from Can Coating	01/09/91.	10/13/92, 57 FR 46780.	
391–3–1–.02(2)(v)	VOC Emissions from Coil Coating	01/09/91.	10/13/92, 57 FR 46780.	

EPA APPROVED GEORGIA REGULATIONS—Continued

State citation	Title/subject	State effective date	EPA approval date	Explanation
391–3–1–.02(2)(w)	VOC Emissions from Paper Coating	01/09/91.	10/13/92, 57 FR 46780.	
391–3–1–.02(2)(x)	VOC Emissions from Fabric and Vinyl Coating.	01/09/91.	10/13/92, 57 FR 46780.	
391–3–1–.02(2)(y)	VOC Emissions from Metal Furniture Coating	01/09/91.	10/13/92, 57 FR 46780.	
391–3–1–.02(2)(z)	VOC emissions from Large Appliance Surface Coating.	01/09/91.	10/13/92, 57 FR 46780.	
391–3–1–.02(2)(aa)	VOC Emissions from Wire Coating	01/09/91.	10/13/92, 57 FR 46780.	
391–3–1–.02(2)(bb)	Petroleum Liquid Storage	01/09/91.	10/13/92, 57 FR 46780.	
391–3–1–.02(2)(cc)	Bulk Gasoline Terminals	01/09/91.	10/13/92, 57 FR 46780.	
391–3–1–.02(2)(dd)	Cutback Asphalt	01/17/79.	09/18/79, 44 FR 54047.	
391–3–1–.02(2)(ee)	Petroleum Refinery	01/09/91.	10/13/92, 57 FR 46780.	
391–3–1–.02(2)(ff)	Solvent Metal Cleaning	05/29/96.	04/26/99, 64 FR 20186.	
391–3–1–.02(2)(gg)	Kraft Pulp Mills	06/03/88.	09/30/88, 53 FR 38290.	
391–3–1–.02(2)(hh)	Petroleum Refinery Equipment Leaks	06/24/94.	02/02/96, 61 FR 3817.	
391–3–1–.02(2)(ii)	VOC Emissions from Surface Coating of Miscellaneous Metal Parts and Products.	10/7/99.	7/10/01, 66 FR 35906.	
391–3–1–.02(2)(jj)	VOC Emissions from Surface Coating of Flat Wood Paneling.	04/03/91.	10/13/92, 57 FR 46780.	
391–3–1–.02(2)(kk)	VOC Emissions from Synthesized Pharmaceutical Manufacturing.	12/18/80.	11/24/81, 46 FR 57486.	
391–3–1–.02(2)(ll)	VOC Emissions from the Manufacture of Pneumatic Rubber Tires.	12/18/80.	11/24/81, 46 FR 57486.	
391–3–1–.02(2)(mm)	VOC Emissions from Graphic Arts Systems	04/03/91.	10/13/92, 57 FR 46780.	
391–3–1–.02(2)(nn)	VOC Emissions from External Floating Roof Tanks.	12/18/80.	11/24/81, 46 FR 57486.	
391–3–1–.02(2)(oo)	Fiberglass Insulation Manufacturing Plants	12/18/80.	11/24/81, 46 FR 57486.	
391–3–1–.02(2)(pp)	Bulk Gasoline Plants	04/03/91.	10/13/92, 57 FR 46780.	
391–3–1–.02(2)(qq)	VOC Emissions from Large Petroleum Dry Cleaners.	04/03/91.	10/13/92, 57 FR 46780.	
391–3–1–.02(2)(rr)	Gasoline Dispensing Facility—Stage I	12/26/01.	7/11/02, 67 FR 45909	
391–3–1–.02(2)(ss)	Gasoline Transport Vehicles and Vapor Collection Systems.	12/26/01.	7/11/02, 67 FR 45909	
391–3–1–.02(2)(tt)	VOC Emissions from Major Sources	2/16/00.	7/10/01, 66 FR 35906	
391–3–1–.02(2)(uu)	Visibility Protection	10/31/85.	01/28/86, 51 FR 3466	
391–3–1–.02(2)(vv)	Volatile Organic Liquid Handling and Storage	2/16/00.	7/10/01, 66 FR 35906	
391–3–1–.02(2)(ww)	Perchloroethylene Dry Cleaners	11/15/94.	06/27/96, 61 FR 33372	Repealed.
391–3–1–.02(2)(yy)	Emissions of Nitrogen Oxides from Major Sources.	2/16/00.	7/10/01, 66 FR 35906	
391–3–1–.02(2)(zz)	Gasoline Dispensing Facilities—Stage II	12/26/01.	7/11/02, 67 FR 45909	
391–3–1–.02(2)(aaa)	Consumer and Commercial Products	10/27/93.	04/26/99, 64 FR 20186	
391–3–1–.02(2)(bbb)	Gasoline Marketing	7/18/01.	2/22/02, 67 FR 8200	
391–3–1–.02(2)(ccc)	VOC Emissions from Bulk Mixing Tanks	2/16/00.	7/10/01, 66 FR 35906	
391–3–1–.02(2)(ddd)	VOC Emissions from Offset Lithography	2/16/00.	7/10/01, 66 FR 35906	
391–3–1–.02(2)(eee)	VOC Emissions from Expanded Polystyrene Products Manufacturing.	2/16/00.	7/10/01, 66 FR 35906	
391–3–1–.02(2)(fff)	Particulate Matter Emissions from Yarn Spinning Operations.	06/15/98.	12/02/99, 64 FR 67491	

EPA APPROVED GEORGIA REGULATIONS—Continued

State citation	Title/subject	State effective date	EPA approval date	Explanation
391–3–1–.02(2)(hhh)	Wood Furniture Finishing and Cleaning Operations.	2/16/00.	7/10/01, 66 FR 35906	
391–3–1–.02(2)(jjj)	NO_X Emissions from Electric steam Generating Units.	07/17/02.	07/09/03, 68 FR 40789.	
391–3–1–.02(2)(kkk)	VOC Emissions from Aerospace Manufacturing and Rework Facilities.	2/16/00.	7/10/01, 66 FR 35906	
391–3–1–.02(2)(lll)	NO_X Emissions from Fuel-burning Equipment	2/16/00.	7/10/01, 66 FR 35906	
391–3–1–.02(2)(mmm).	NO_X Emissions from Stationary Gas Turbines and Stationary Engines used to Generate Electricity.	2/16/00.	7/10/01, 66 FR 35906	
391–3–1–.02(2)(nnn)	NO_X Emissions from Large Stationary Gas Turbines.	2/16/00.	7/10/01,66 FR 35906	
391–3–1–.02(2)(ooo)	Heavy Duty Diese Engine Requirements	2/16/00.	7/10/01, 66 FR 35906	
391–3–1–.02(3)	Sampling	06/15/98.	12/02/99, 64 FR 67491	
391–3–1–.02(4)	Ambient Air Standards	01/09/91.	12/14/92, 57 FR 58989	
391–3–1–.02(5)	Open Burning	8/16/00.	7/10/01, 66 FR 35906	
391–3–1–.02(6)	Source Monitoring	12/28/00.	7/11/02, 67 FR 45909	
391–3–1–.02(7)	Prevention of Significant Deterioration of Air Quality (PSD).	06/15/98.	12/02/99, 64 FR 67491	
391–3–1.02(11)	Compliance Assurance Monitoring	06/15/98.	12/02/99, 64 FR 67491	
391–3–1–.03	Permits	12/26/01.	7/11/02, 67 FR 45909	Paragraph (9) Permit Fees; Paragraph (10) Title V Operating Permits are not federally approved.
391–3–1–.04	Air Pollution Episodes	11/20/75.	08/20/76 41 FR 35184	
391–3–1–.05	Regulatory Exceptions	11/22/92.	02/02/96, 61 FR 3819	
391–3–1–.07	Inspections and Investigations	11/20/75.	08/20/76, 41 FR 35184	
391–3–1–.08	Confidentiality of Information	11/20/75.	08/20/76, 41 FR 35184	
391–3–1–.09	Enforcement	11/22/92.	02/02/96, 61 FR 3819	
391–3–1-.10	Continuance of Prior Rules	11/22/92.	02/02/96, 61 FR 3819	
391–3–20	Enhanced Inspection and Maintenance	12/30/02.	07/09/03, 68 FR 40789.	
391–3–22	Clean Fueled Fleets	06/15/98.	12/02/99, 64 FR 67491.	

(d) *EPA-approved State Source specific requirements.*

EPA-APPROVED GEORGIA SOURCE-SPECIFIC REQUIREMENTS

Name of source	Permit No.	State effective date	EPA approval date	Explanation
Georgia Power Plant Bowen	EPD–AQC–180	11/17/80.	08/17/81, 46 FR 41498.	
Georgia Power Plant Harllee Branch.	4911–117–6716–0	04/23/80.	05/05/81, 46 FR 25092.	
ITT Rayonier, Inc.	2631–151–7686–C	11/04/80.	08/14/81, 46 FR 41050.	
Georgia Power Plant Bowen	EPD–AQC–163	05/16/79.	01/03/80, 45 FR 781.	
Union Camp	2631–025–7379–0	12/18/81.	04/13/82, 47 FR 15794.	
Blue Bird Body Company	3713–111–8601	01/27/84.	01/07/85, 50 FR 765.	
Plant McDonough	4911–033–5037–0 conditions 10 through 22.	12/27/95.	03/18/99, 64 FR 13348.	
Plant Yates	4911–038–4838–0 conditions 19 through 32.	12/27/95.	03/18/99, 64 FR 13348.	
Plant Yates	4911–038–4839–0 conditions 16 through 29.	12/27/95.	03/18/99, 64 FR 13348.	
Plant Yates	4911–038–4840–0 conditions 16 through 29.	12/27/95.	03/18/99, 64 FR 13348.	
Plant Yates	4911–038–4841–0 conditions 16 through 29.	12/27/95.	03/18/99, 64 FR 13348.	
Plant Atkinson	4911–033–1321–0 conditions 8 through 13.	11/15/94.	03/18/99, 64 FR 13348.	
Plant Atkinson	4911–033–1322–0 conditions 8 through 13.	11/15/94.	03/18/99, 64 FR 13348.	
Plant Atkinson	4911–033–6949 conditions 5 through 10.	11/15/94.	03/18/99, 64 FR 13348.	
Plant Atkinson	4911–033–1320–0 conditions 8 through 13.	11/15/94.	03/18/99, 64 FR 13348.	
Plant Atkinson	4911–033–1319–0 conditions 8 through 13.	11/15/94.	03/18/99, 64 FR 13348.	
Plant McDonough	4911–033–6951 conditions 5 through 10.	11/15/94.	03/18/99, 64 FR 13348.	
Atlanta Gas Light Company	4922–028–10902 conditions 20 and 21.	11/15/94.	03/18/99, 64 FR 13348.	
Atlanta Gas Light Company	4922–031–10912 conditions 27 and 28.	11/15/94.	03/18/99, 64 FR 13348.	
Austell Box Board Corporation	2631–033–11436 conditions 1 through 5.	11/15/94.	03/18/99, 64 FR 13348.	
Emory University	8922–044–10094 conditions 19 through 26.	11/15/94.	03/18/99, 64 FR 13348.	
General Motors Corporation	3711–044–11453 conditions 1 through 6 and Attachment A.	11/15/94.	03/18/99, 64 FR 13348.	
Georgia Proteins Company	2077–058–11226 conditions 16 through 23 and Attachment A.	11/15/94.	03/18/99, 64 FR 13348.	
Owens-Brockway Glass Container, Inc.	3221–060–10576 conditions 26 through 28 and Attachment A.	11/15/94.	03/18/99, 64 FR 13348.	
Owens-Corning Fiberglass Corporation.	3296–060–10079 conditions 25 through 29.	11/15/94.	03/18/99, 64 FR 13348.	

(e) EPA Approved Georgia Nonregulatory Provisions.

Name of nonregulatory SIP Provision	Applicable geographic or nonattainment area	State submittal date/effective date	EPA approval date
1. High Occupancy Vehicle (HOV) lane on I–85 from Chamblee-Tucker Road to State Road 316.	Atlanta Metropolitan Area.	11/15/93 and amended on 06/17/96.	03/18/99 and 04/26/99.
2. Clean Fuel Vehicles Revolving Loan Program.			
3. Regional Commute Options Program and HOV Marketing Program.			

Name of nonregulatory SIP Provision	Applicable geographic or nonattainment area	State submittal date/ effective date	EPA approval date
4. HOV lanes on I–75 and I–85.			
5. Two Park and Ride Lots: Rockdale County-Sigman at I-20 and Douglas County-Chapel Hill at I–20.			
6. MARTA Express Bus routes (15 buses).			
7. Signal preemption for MARTA routes #15 and #23.			
8. Improve and expand service on MARTA's existing routes in southeast DeKalb County.			
9. Acquisition of clean fuel buses for MARTA and Cobb County Transit.			
10. ATMS/ Incident Management Program on I–75/I–85 inside I–285 and northern ARC of I–285 between I–75 and I–85.			
11. Upgrading, coordination and computerizing intersections.			
12. Georgia Interagency Transportation Conformity Memorandum of Agreement, except for the following sections: Section 103(4)(d); Section 105(e); Section 106(c); Section 110(c)(1)(ii); Section 110(c)(2)(ii); Section 110(d)(2)(i); Section 110(d)(3)(i); Section 110(e)(2)(i); Section 110(e)(3)(i); Section 119(e)(1); Section 119b(a)(2); Section 130(1); and Section 133.	Atlanta Metropolitan Area.	2/16/99	11/26/02
13. Atlantic Steel Transportation Control Measure.	Atlanta Metropolitan Area.	03/29/00	8/28/00
14. Procedures for Testing and Monitoring Sources of Air Pollutants.	Atlanta Metropolitan Area.	7/31/00	7/10/01
15. Enhanced Inspection/Maintenance Test Equipment, Procedures and Specifications.	Atlanta Metropolitan Area.	9/20/00	7/10/01
16. Preemption Waiver Request for Low-RVP, Low-Sulfur Gasoline Under Air Quality Control Rule 391–3–1–.02(2)(bbb).	Atlanta Metropolitan Area.	5/31/00	2/22/02
17. Technical Amendment to the Georgia Fuel Waiver Request of May 31, 2000.	Atlanta Metropolitan Area.	11/09/01	2/22/02
18. Georgia's State Implementation Plan for the Atlanta Ozone Nonattainment Area.	Atlanta Metropolitan Area.	7/17/01	5/7/02

[64 FR 27701, May 21, 1999, as amended at 64 FR 35004, June 30, 1999; 64 FR 67494, Dec. 2, 1999; 64 FR 72940, Dec. 29, 1999; 65 FR 4136, Jan. 26, 2000; 65 FR 13241, Mar. 13, 2000; 65 FR 18249, Apr. 7, 2000; 65 FR 39822, June 28, 2000; 65 FR 52040, Aug. 28, 2000; 66 FR 35909, July 10, 2001; 67 FR 8202, Feb. 22, 2002; 67 FR 30589, May 7, 2002; 67 FR 19336, Apr. 19, 2002; 67 FR 45913, 45915, July 11, 2002; 67 FR 60871, Sept. 27, 2002; 68 FR 33015, June 3, 2003; 68 FR 40789, July 9, 2003; 68 FR 48558, Aug. 14, 2003]

EFFECTIVE DATE NOTE: At 69 FR 33864, June 17, 2004, § 52.570(c) was amended by revising the entry for "391–3–1–.02(2)(bbb) Gasoline Marketing", effective July 19, 2004. For the convenience of the user, the revised text follows:

§ 52.570 Identification of plan.

* * * * *

(c) * * *

EPA APPROVED GEORGIA REGULATIONS

State citation	Title/subject	State effective date	EPA approval date	Explanation
* *	* *		* *	*
391–3–1–.02(2)(bbb)	Gasoline Marketing	6/24/03.	6/17/04, 69 FR 33864.	
* *	* *		* *	*

* * * * *

§ 52.571 Classification of regions.

The Georgia plan was evaluated on the basis of the following classifications:

Air quality control region	Pollutant				
	Particulate matter	Sulfur oxides	Nitrogen dioxide	Carbon monoxide	Photochemical oxidants (hydrocarbons)
Augusta (Georgia)-Aiken (South Carolina) Interstate	I	II	III	III	III
Metropolitan Atlanta Intrastate	I	I	III	III	III
Chattanooga Interstate	I	II	III	III	III
Columbus (Georgia)-Phenix City (Alabama) Interstate	I	III	III	III	III
Central Georgia Intrastate	I	I	III	III	III
Jacksonville (Florida)-Brunswick (Georgia) Interstate	I	II	III	III	I
Northeast Georgia Intrastate	II	III	III	III	III
Savannah (Georgia)-Beaufort (South Carolina) Interstate	I	I	III	III	III
Southwest Georgia Intrastate	II	II	III	III	III

[37 FR 10859, May 31, 1972, as amended at 39 FR 16346, May 8, 1974]

§ 52.572 Approval status.

With the exceptions set forth in this subpart, the Administrator approves Georgia's plans for the attainment and maintenance of the national standards under section 110 of the Clean Air Act. Furthermore, the Administrator finds the plans satisfy all requirements of Part D, Title I, of the Clean Air Act as amended in 1977, except as noted below.

[44 FR 54050, Sept. 18, 1979]

§ 52.573 Control strategy: General.

The generic rules and procedures for emission trades (bubbles), submitted on October 27, 1982, by the Georgia Department of Natural Resources, are disapproved because they do not meet the requirements of the Clean Air Act.

[49 FR 44464, Nov. 7, 1984]

§ 52.574–52.575 [Reserved]

§ 52.576 Compliance schedules.

(a) [Reserved]

(b) The extended compliance schedule for the General Motors Lakewood Assembly Plant submitted on July 30, 1982, is disapproved because the State has failed to show that the schedule would not interfere with the attainment of the ozone standard in the Atlanta nonattainment area.

[40 FR 3413, Jan. 22, 1975, as amended at 40 FR 18432, Apr. 28, 1975; 40 FR 42352, Sept. 12, 1975; 51 FR 3778, Jan. 30, 1986; 51 FR 40675, 40676, Nov. 7, 1986; 54 FR 25258, June 14, 1989]

§ 52.577 [Reserved]

§ 52.578 Control Strategy: Sulfur oxides and particulate matter.

In a letter dated March 26, 1987, the Georgia Department of Natural Resources certified that no emission limits in the State's plan are based on dispersion techniques not permitted by EPA's stack height rules. This certification does not apply to Georgia Power plants; Hammond (Coosa), McDonough (Smyrna), Arkwright (Macon), Branch (Milledgeville), Wansley (Roopville), Scherer (Juliette), and Yates (Newnan), Savannah Electric Plants McIntosh (Rincon) and Port Wentworth (Port Wentworth); Inland (Rome); Buckeye Cellulose (Oglethorpe); Georgia Kraft (Macon), Union Camp (Savannah); and Stone Container (Savannah).

[54 FR 40002, Sept. 29, 1989]

§ 52.579 Economic feasibility considerations.

Section 88–906(h), (i), (k), (o) and (q) of the Georgia Code is disapproved, since consideration of economic feasibility could, in some cases, conflict, with the requirements of the Act that primary standards be attained as expeditiously as practicable, but in no case later than July 1975.

[39 FR 34536, Sept. 26, 1974]

§ 52.580 [Reserved]

§ 52.581 Significant deterioration of air quality.

(a) All applications and other information required pursuant to § 52.21 of this part from sources located in the State of Georgia shall be submitted to the Environmental Protection Division, Georgia Department of Natural Resources, 270 Washington Street, S.W., Atlanta, Georgia 30334, instead of the EPA Region IV office.

(b) A letter of commitment concerning the incorporation of EPA's revised modeling guidelines for PSD into the Georgia regulations was submitted to EPA on May 11, 1987, by the Georgia Department of Natural Resources.

[41 FR 24885, June 21, 1976, as amended at 47 FR 6018, Feb. 10, 1982; 52 FR 32918, Sept. 1, 1987]

§ 52.582 Control strategy: Ozone.

(a) Approval—The Administrator approves the incorporation of the photochemical assessment ambient monitoring system submitted by Georgia on November 8, 1993, into the Georgia State Implementation Plan. This submittal satisfies 40 CFR 58.20(f) which requires the State to provide for the establishment and maintenance of photochemical assessment monitoring stations (PAMS).

(b) On August 29, 1997, Harold F. Reheis, Director, Georgia Department of Natural Resources submitted to John Hankinson, Regional Administrator, United States Environmental Protection Agency Region IV, a State Implementation Plan revision including the following transportation control measures.

(1) *HOV Lane*—This project referred to as AR 073B is the addition of HOV lanes on I–85 from Chamblee-Tucker Road to State Route 316.

(2) *Ridershare Program*—This project is referred to as AR–220 and is a lump sum eligible to all colleges and universities with the 10 county ARC region.

(3) *Transportation Management Associations*—Referred to as project AR 221 is to set up a "pot" of funds set aside specially to assist in the development of transportation management associations and start-up ridershare services in the areas that are considered to be highly congested throughout the Region.

(4) *MARTA Transit Incentives Program*—This project is referred to as AR–231.

(5) *Alternative Fuel Refueling Station/Park and Ride Transportation Center*—This project is referred to as DO–AR–211.

(c) EPA is giving final interim approval to the Georgia Inspection and Maintenance (I/M) Program submitted on March 27, 1996, with supplemental information submitted on January 31, 1997, until November 11, 1999.

[59 FR 46178, Sept. 7, 1994, as amended at 63 FR 23390, Apr. 29, 1998; 63 FR 34302, June 24, 1998; 64 FR 4570, Jan. 29, 1999]

§ 52.583 Additional rules and regulations.

Section 391–3–1–.02(2)(e), Particulate Emissions from Manufacturing Processes, is hereby approved only to the extent that it provides for the establishment, as permit conditions, of emission limits more stringent than those otherwise applicable under the currently approved Georgia regulations. Any application of this regulation which would result in permit provisions less stringent than those otherwise required by the State's regulations must be formally submitted to EPA for prior approval as a plan revision pursuant to section 110(a) of the Clean Air Act.

[41 FR 35185, Aug. 20, 1976]

§ 52.590 Original identification of plan section.

(a) This section identifies the original "Air Implementation Plan for the State of Georgia" and all revisions submitted by Georgia that were federally approved prior to December 1, 1998.

(b) The plan was officially submitted on January 27, 1972.

(c) The plan revisions listed below were submitted on the dates specified.

(1) Revisions to paragraph (a)(2) of Code Chapter 88–9 submitted on March 28, 1972, by the Assistant Attorney General.

(2) Certification of public hearing submitted on February 14, 1972, by the Georgia Department of Health.

(3) Miscellaneous non-regulatory additions to the plan submitted on March

9, 1972, by the Georgia Department of Health.

(4) Clarifying comments on the plan submitted on May 5, 1972, by the Georgia Department of Health.

(5) Certification of public hearing and miscellaneous additions to Chapter 391–3–1, Sections .02(2)(d), .02(2)(q), .02(2)(r) and .02(6) submitted on July 31, 1972, by the Governor.

(6) Amendments concerning operating permits, Section 391–3–1–.03, submitted on March 20, 1974, by the Georgia Department of Natural Resources.

(7) AQMA identification material submitted on May 17, 1974, by the Georgia Department of Natural Resources.

(8) Revisions to Sections 391–3–1–02(2)(a) and 391–3–1–.02(2)(g) and revocation of Section 391–3–1–02(2)(i) submitted on July 23, 1974, by the Georgia Department of Natural Resources.

(9) Compliance schedules submitted on August 2, 1974, by the Georgia Department of Natural Resources.

(10) Temporary operating permits submitted as compliance schedules on October 8, 1974, by the Georgia Department of Natural Resources.

(11) Temporary operating permits submitted as compliance schedules on November 7, 1974, by the Georgia Department of Natural Resources.

(12) Compliance schedules submitted on January 23, 1975, by the Georgia Department of Natural Resources.

(13) AQMA identification material submitted on March 10, 1975, by the Georgia Department of Natural Resources.

(14) Permit to operate for Georgia Power Company's Plant Atkinson submitted on May 22, 1975, by the Georgia Department of Natural Resources.

(15) Deletion of Section 391–3–1–.02(2)(m), the last sentence in Section 391–3–1–.03(2)(c) and the last sentence in Section 391–3–1–.03(3) submitted on June 30, 1975, by the Georgia Department of Natural Resources.

(16) Miscellaneous plan revisions, submitted on December 16, 1975, by the Georgia Department of Natural Resources.

(17) 1979 Implementation plan revisions for nonattainment areas for ozone, total suspended particulates, and carbon monoxide, submitted on January 17, March 9, 16, 20, June 29, December 27, 1979 and April 8, 1980, by the Georgia Department of Natural Resources.

(18) Order for Georgia Power Company's Plant Bowen, Units 1 and 2, Taylorsville, submitted on May 16, 1979, by the Georgia Department of Natural Resources.

(19) Miscellaneous implementation plan revisions, submitted on March 9, 1979, by the Georgia Department of Natural Resources.

(20) Alternate VOC compliance schedules for Ford and General Motors plants in the Atlanta area, submitted on April 14, 1980 by the Georgia Department of Natural Resources.

(21) Order for Georgia Power Company's Plant Harllee Branch, Unit 3 and 4 submitted on May 13, 1980, by the Georgia Department of Natural Resources.

(22) Air quality surveillance plan submitted on January 29, 1980, by the Georgia Department of Natural Resources.

(23) Permit revision affecting the allowable particulate emission rates from the No. 6 Recovery Boiler, No. 3 Power Boiler and No. 5 Smelt Dissolving Tank at the ITT Rayonier, Inc. in Jesup, Georgia submitted on December 18, 1980, by the Georgia Department of Natural Resources.

(24) Order on Units 1 and 2 of Georgia Power Company's Plant Bowen submitted on December 20, 1980, by the Georgia Department of Natural Resources.

(25) Georgia lead SIP submitted on December 18, 1980, by the Georgia Department of Natural Resources.

(26) Prevention of significant deterioration SIP, submitted on December 18, 1980, by the Georgia Department of Natural Resources.

(27) A modified permit submitted on December 22, 1981, by the Georgia Department of Natural Resources which imposes special reporting and opacity limitations on Union Camp Corporation's Power Boilers 11 and 12 in Savannah, Georgia.

(28) Set II VOC regulations, submitted on December 18, 1980, by the Georgia Department of Natural Resources.

(29) Alternative VOC compliance schedules for three sources in the Atlanta area (St. Regis Paper Co., Printpack, Inc., and American Can Co.), submitted on December 18, 1980, and May 7, 1981, by the Georgia Department of Natural Resources.

(30) Revisions to the Part D plan for the Atlanta CO nonattainment area, submitted on July 30, 1982, by the Georgia Department of Natural Resources.

(31) Bubble permit for Blue Bird Body Company in Fort Valley, submitted on January 27, 1984, by the Georgia Department of Natural Resources.

(32) Visibility new source review regulations and visibility monitoring strategy were submitted to EPA on May 22, 1985, and October 31, 1985.

(i) Incorporation by reference.

(A) Letter of May 22, 1985, from the Georgia Department of Natural Resources and new paragraph (2)(uu) of Rule No. 391–3–1–.02, titled "Visibility Protection", adopted by the Georgia Board of Natural Resources on May 1, 1985.

(ii) Additional material.

(A) Narrative SIP, titled "Georgia's Plan for Visibility Protection in Class I Areas" which includes the State's Visibility Monitoring Strategy.

(B) Letter dated October 31, 1985, from the Georgia Department of Natural Resources, providing a schedule for the completion of Georgia's Visibility Monitoring Strategy.

(33) [Revised]

(34) Revision to Georgia's plan for visibility protection in Class I areas entitled "Visibility SIP" submitted to EPA on August 31, 1987, by the Georgia Environmental Protection Division (GEPD) to satisfy the Part 2 visibility requirements.

(i) Incorporation by reference.

(A) June 10, 1988, letter from the Georgia Department of Natural Resources, and page 5 of the section entitled "Visibility SIP" which is part of the Georgia plan for visibility protection in Class I areas. This page contains the periodic review requirements satisfying 40 CFR 51.306(c), and was adopted by the Georgia Department of Natural Resources on August 31, 1987.

(ii) Additional material.

(A) Narrative entitled "Visibility SIP", a revision to Georgia's plan for visibility protection in Class I areas.

(35) A revised subsection (2)(c), "Incinerators," of rule 391–3–1–02 was submitted by the Georgia Department of Natural Resources on May 22, 1985.

(i) Incorporation by reference.

(A) Letter of May 22, 1985, from the Georgia Department of Natural Resources and revised subsection (2)(c) of rule 391–3–1–.02, titled "Incinerators," adopted by the Georgia Board of Natural Resources on May 1, 1985.

(ii) Additional material—none.

(36) Revised subsections (b) and (d) of rule 391–3–1–.02 (5), "Open Burning," were submitted by the Georgia Department of Natural Resources on May 22, 1985.

(i) Incorporation by reference.

(A) Letter of May 22, 1985, from the Georgia Department of Natural Resources and revised subsections (b) and (d) of rule 391–3–1–.02(5), entitled "Open Burning," adopted by the Georgia Board of Natural Resources on May 1, 1985, to be effective May 27, 1985.

(ii) Additional material.

(A) Modeling demonstration, submitted on February 19, 1988, by the Georgia Department of Natural Resources.

(37) Revisions to the VOC regulations, to correct RACT deficiencies; Chapter 391–3–1–.01, and .02 of the Georgia Department of Natural Resources Rules for Air Quality Control, which was submitted on January 3, 1991, and April 3, 1991. Change to Chapter 391–3–1–.02(3) to reference a new version of the test manual which includes capture efficiency protocols, which was submitted on September 30, 1991, and November 15, 1991.

(i) Incorporation by reference.

(A) The following Rules of the Georgia Department of Natural Resources, Chapter 391–3–1, Air Quality Control, became State effective on January 9, 1991.

391–3–1–.01(jjj);
391–3–1–.02(2)(a)4.;
391–3–1–.02(2)(t);
391–3–1–.02(2)(u)2.(i) and (iii);
391–3–1–.02(2)(v)2.(i) and (iii);
391–3–1–.02(2)(w)2.(i) and (iii);
391–3–1–.02(2)(x)2.(i), (iii), and (x)3.(v);
391–3–1–.02(2)(y)2.(i) and (iii);
391–3–1–.02(2)(z)2.(i) and (iii);

391–3–1–.02(2)(aa)2.(i) and (iii);
391–3–1–.02(2)(bb)1.(ii);
391–3–1–.02(2)(cc);
391–3–1–.02(2)(ee)1.(iii);
391–3–1–.02(2)(ff)2.(ii)(V) and 3.(iii)(III);
391–3–1–.02(2)(ii)4.(i) and (iii);
391–3–1–.02(2)(jj)2.(i) and (iii);
391–3–1–.02(2)(mm)1.(i), (ii), and (iii);
391–3–1–.02(2)(pp);
391–3–1–.02(2)(qq);
391–3–1–.0292)(rr);
391–3–1–.02(2)(ss);
391–3–1–.02(3)(a);
391–3–1–.02(6)(a)3.

(B) A revised Rule 391–3–1–.02(3)(a) "Sampling" which became State effective October 17, 1991.

(ii) Other material—None.

(38) State implementation plan for PM10 which was submitted on April 15, 1988, January 3, 1991, and April 3, 1991, by the Georgia Department of Natural Resources.

(i) Incorporation by reference.

(A) Revisions to Chapter 391–3–1, "Air Quality Control" which became State effective April 14, 1988. Rule 391–3–1–.01, "Definitions", mm, yyy, zzz, aaaa; Rule 391–3–1–.02(4)(c), "Ambient Air Standards"; Rule 391–3–1.–02(7), "Prevention of Significant Deterioration of Air Quality".

(B) Revisions to Rule 391–3–1–.02(4)(c), "PM10", which became State effective January 9, 1991.

(ii) Other material.

(A) April 15, 1988, January 3, 1991, and April 3, 1991, letters from the Georgia Department of Natural Resources.

(39) On December 15, 1986, and November 13, 1992, the Georgia Department of Natural Resources, Environmental Protection Division submitted regulations for Part D New Source Review.

(i) Incorporation by reference. Revisions to the following Rules of Georgia Department of Natural Resources, Environmental Protection Division, effective November 22, 1992:

(A) 391–3–1–.01 introductory paragraph

(B) 391–3–1–.03(8)(c)

(ii) Other material. Letter dated February 28, 1989, from the Georgia Department of Natural Resources, page 3 regarding change in operation of a source.

(40) Revisions to include NO_2 increment requirements in the PSD regulations, Chapter 391–3–.02(7) of the Georgia Department of Natural Resources Administrative Code which was submitted on January 3, 1991.

(i) *Incorporation by reference.*

(A) Rule 391–3–1–.02(7) entitled "Prevention of Significant Deterioration of Air Quality" which became state effective on January 9, 1991.

(ii) *Other material.*

(A) Letters dated January 3, 1991, and April 3, 1991, from the Georgia Department of Natural Resources.

(B) Letter dated August 6, 1991, from the Georgia Department of Natural Resources regarding minimum program elements.

(41) Revisions to Chapters 391–3–1–.01, 391–3–1–.02, and 391–3–1–.03 of the Georgia Department of Natural Resources Rules for Air Quality Control, adopted on May 29, 1996, October 27, 1993, and August 23, 1995.

(i) Incorporation by reference.

(A) Rules of the Georgia Department of Natural Resources, Environmental Protection Division, Chapter 391–3–1, Air Quality Control, adopted on May 29, 1996:

(*1*) 391–3–1–.01(llll).
(*2*) 391–3–1–.01(mmmm).
(*3*) 391–3–1–.02(2)(ff)4.
(*4*) 391–3–1–.02(2)(ff)5.
(*5*) 391–3–1–.02(7).
(*6*) 391–3–1–.03(6).
(*7*) 391–3–1–.03(6)(b)11.
(*8*) 391–3–1–.03(6)(b)13.
(*9*) 391–3–1–.03(6)(c).
(*10*) 391–3–1–.03(6)(g).
(*11*) 391–3–1–.03(6)(h).

(B) Rules of the Georgia Department of Natural Resources, Environmental Protection Division, Chapter 391–3–1, Air Quality Control, adopted October 27, 1993:

(*1*) 391–3–1–.02(2)(aaa).
(*2*) 391–3–1–.02(5)(a)3.
(*3*) 391–3–1–.02(5)(a)13.
(*4*) 391–3–1–.02(5)(b).

(C) Rules of the Georgia Department of Natural Resources, Environmental Protection Division, Chapter 391–3–1, Air Quality Control, adopted August 23, 1995:

(*1*) 391–3–1–.02(2)(ii)6.
(*2*) 391–3–1–.02(2)(rr)1.
(*3*) 391–3–1–.02(2)(rr)3(vii).
(*4*) 391–3–1–.02(2)(rr)6.
(*5*) 391–3–1–.02(2)(zz)3.
(*6*) 391–3–1–.02(2)(zz)7.

(*7*) 391–3–1–.02(2)(zz)8.
(*8*) 391–3–1–.02(2)(zz)9.
(*9*) 391–3–1–.02(2)(zz)10.
(*10*) 391–3–1–.02(2)(zz)11.
(*11*) 391–3–1–.02(2)(zz)13.
(*12*) 391–3–1–.02(2)(zz)20.
(*13*) 391–3–1–.02(2)(aaa)4.

(ii) Other material. None.

(42) Revisions to the Georgia stack height regulations; Chapter 391–3–1 of the Georgia Department of Natural Resources Administrative Code which were submitted on December 15, 1986, and January 3, 1991.

(i) Incorporation by reference.

(A) Rule 391–3–1–.02 (2)(g), which was adopted by the Georgia Dept. of Natural Resources on December 3, 1986.

(B) Rule 391–3–1–.01 (Definitions) to include definitions (bbbb) and (cccc) for "stack" and "stack in existence"; and Rule 391–3–1–.02 (2)(a)4., which were adopted on December 5, 1990 by the Georgia Department of Natural Resources, and became State law effective January 9, 1991.

(43) The Georgia Environmental Protection Division has submitted revisions to the Georgia State Implementation Plan on September 27, 1995. These revisions address the requirements of section 507 of Title V of the Clean Air Act and establish the Small Business Stationary Source Technical and Environmental Program.

(i) Incorporation by reference.

(A) The submittal of the state of Georgia's Small Business Stationary Source Technical and Environmental Compliance Assistance Program which was adopted on July 20, 1995.

(ii) Additional Material. None.

(44) Revisions to the Georgia State Implementation Plan; Chapter 391–3–1 and Chapter 391–3–10 of the Georgia Department of Natural Resources Administrative Code which were submitted to EPA on November 13, 1992.

(i) Incorporation by reference.

(A) Georgia Department of Natural Resources Air Quality Rules submitted by the Georgia Department of Natural Resources, Environmental Protection Division for inclusion in the Georgia state implementation plan which were adopted on October 28, 1992, are as follows:

391–3–1–.05, 391–3–1–.09, 391–3–1–.10, 391–3–1–.02(2)(zz), 391–3–1–.02(6)(a)4., 391–3–1–.03(5), 391–3–1–.03(6)(h), 391–3–10.01(d)(e), 391–3–10–.04(d), 391–3–10–.07(2), 391–3–10–.10(b), 391–3–10–.12, 391–3–10–.24(11), 391–3–10–.30(1), 391–3–10–.30(2).

(ii) Other material. None.

(45) The State of Georgia submitted a lead SIP for the Muscogee County lead nonattainment area dated September 28, 1998.

(i) Incorporation by reference.

State Implementation Plan for Lead Columbus, Georgia Muscogee County, Requirements for the GNB facility that were adopted on September 28, 1998.

(ii) Other material. None.

(46) Revisions to minor source permit rules submitted by the Georgia Environmental Protection Division on March 15, 1995.

(i) Incorporation by reference. Revised Rule 391–3–1–.03, "Permits", sections (1), (2), and (12), effective August 17, 1994.

(ii) Other material. None.

(47) Chapter 391–3–1–.01, .02(2), and .02(7), of the Georgia Department of Natural Resources Rules for Air Quality Control, submitted on June 24, 1994, and November 15, 1994. Change to Chapters 391–3–1–.02(3) and 391–3–1–.02(6) to reference a new version of the Georgia Department of Natural Resources Manual of Procedures for Testing and Monitoring Sources of Air Pollutants, submitted on November 15, 1994.

(i) Incorporation by reference.

(A) The following revised Rules of the Georgia Department of Natural Resources, Chapter 391–3–1, Air Quality Control, became State effective on June 13, 1994:

391–3–1–.02(2)(hh)(iii);
391–3–1–.02(7);

(B) The following revised Rules of the Georgia Department of Natural Resources, Chapter 391–3–1, Air Quality Control, became State effective on November 20, 1994:

391–3–1–.01;
391–3–1–.02(2)(t);
391–3–1–.02(2)(ccc);
391–3–1–.02(2)(eee);
391–3–1–.02(3)(a);
391–3–1–.02(6)(a)2.(v)(I);
391–3–1–.02(6)(a)2.(vii)(I);
391–3–1–.02(6)(a)2.(vii)(II)I.;
391–3–1–.02(6)(b)1.(vi)

(ii) Other material. None.

(48) Clean Fuel Fleet program submitted to EPA by the Georgia Department of Natural Resources on May 5, 1994.

(i) Incorporation by reference.

(A) Addition of Regulations 391–3–21–.01, "Definitions," 391–3–21–.02, "Covered Area," 391–3–21–.03, "Covered Fleet Operators," 391–3–21–.04, "Covered Fleet Vehicles," 391–3–21–.05, "Determination of Capable of Being Centrally Fueled," 391–3–21.06, "Purchase Requirements," 391–3–21.07, "Emission Standards," 391–3–21.08, "Credit Program," 391–3–21.09, "Transportation Control Exemptions," 391–3–21.10, "Requirements for Fuel Providers," 391–3–21–.11, " Enforcement" which became effective on May 22, 1994.

(ii) Other material. None.

(49) Addition of NO_X RACT permits to specify RACT for specific sources, submitted on November 15, 1994, and March 19, 1998.

(i) Incorporation by reference.

(A) The following source specific NO_X RACT permits of the Georgia Department of Natural Resources, Chapter 391–3–1, Air Quality Control, effective on December 27, 1995.

NO_X RACT Permits:

(*1*) Permit 4911–033–5037–0 Plant McDonough conditions 10 through 22;

(*2*) Permit 4911–038–4838–0 Plant Yates conditions 19 through 32;

(*3*) Permit 4911–038–4839–0 Plant Yates conditions 16 through 29;

(*4*) Permit 4911–038–4840–0 Plant Yates conditions 16 through 29; and

(*5*) Permit 4911–038–4841–0 Plant Yates conditions 16 through 29.

(B) The following source specific NO_X RACT permits of the Georgia Department of Natural Resources, Chapter 391–3–1, Air Quality Control, effective on November 15, 1994.

NO_X RACT Permits:

(*1*) Permit 4911–033–1321–0 Plant Atkinson conditions 8 through 13.

(*2*) Permit 4911–033–1322–0 Plant Atkinson conditions 8 through 13.

(*3*) Permit 4911–033–6949 Plant Atkinson conditions 5 through 10.

(*4*) Permit 4911–033–1320–0 Plant Atkinson conditions 8 through 13.

(*5*) Permit 4911–033–1319–0 Plant Atkinson conditions 8 through 13.

(*6*) Permit 4911–033–6951 Plant McDonough conditions 5 through 10.

(*7*) Permit 4922–028–10902 Atlanta Gas Light Company conditions 20 and 21.

(*8*) Permit 4922–031–10912 Atlanta Gas Light Company conditions 27 and 28.

(*9*) Permit 2631–033–11436 Austell Box Board Corp. conditions 1 through 5.

(*10*) Permit 8922–044–10094 Emory University conditions 19 through 26.

(*11*) Permit 3711–044–11453 General Motors Corporation conditions 1 thorough 6 and Attachment A.

(*12*) Permit 2077–058–11226 Georgia Proteins Company conditions 16 through 23 and Attachment A.

(*13*) Permit 3221–060–10576 Owens-Brockway Glass Container, Inc. conditions 26 through 28 and Attachment A.

(*14*) Permit 3296–060–10079 Owens-Corning Fiberglass Corporation conditions 25 through 29.

(*15*) Permit 3354–038–6686–0 William L. Bonnell Co. conditions 17 through 30.

(*16*) Permit 4922–075–10217 Transcontinental Gas Pipe Line Corporation conditions 21 through 24.

(*17*) Permit 9711–033–11456 Lockheed-Georgia Company conditions 1 through 11.

(*18*) Permit 3241–060–8670 Blue Circle Incorporated conditions 48 through 54.

(ii) Other material. None.

(50) Georgia Enhanced Inspection and Maintenance submitted to EPA by the Georgia Department of Natural Resources on March 27, 1996.

(i) Incorporation by reference.

(A) Chapter 391–3–20 Enhanced Inspection and Maintenance program effective on September 24, 1996.

(ii) Other material. None.

[37 FR 10859, May 31, 1972. Redesignated at 64 FR 27701, May 21, 1999]

EDITORIAL NOTE: For FEDERAL REGISTER citations affecting § 52.590, see the List of CFR Sections Affected, which appears in the Finding Aids section of the printed volume and on GPO Access.

Subpart M—Hawaii

§ 52.620 Identification of plan.

(a) Title of plan: "State of Hawaii Air Pollution Control Implementation Plan".

(b) The plan was officially submitted on January 28, 1972.

(1) Previously approved on May 31, 1972 and now deleted without replacement chapter 43, section 7.

(c) The plan revisions listed below were submitted on the dates specified.

(1) Certification that the plan was adopted submitted on April 4, 1972, by the Department of Health.

(2) Telegram and letters (Non-regulatory) clarifying the plan submitted on May 8, 1972, by the Governor.

(3) Telegram (Non-regulatory) clarifying the particulate matter control strategy submitted on May 22, 1972, by the Governor.

(4) Letter (Non-regulatory) clarifying disapproval of the plan submitted on June 15, 1972, by the Governor.

(5) Revised regulations (in their entirety) for the State of Hawaii submitted on November 21, 1972, by the Governor.

(6) Regulations establishing a permit system for agricultural burning submitted on May 15, 1973, by the Governor.

(7) Compliance schedule submitted on July 27, 1973, by the Governor.

(8) 18-month extension plan for particulate matter submitted on August 15, 1973, by the Governor.

(9) Date for attainment of the national ambient air quality standards for particulate matter submitted on April 25, 1974, by the Governor.

(10) Previously approved on April 23, 1979 and now deleted without replacement: A variance to the Hawaii Public Health Regulations, chapter 43, section 7(b)(5) submitted on September 12, 1978, by the Governor.

(11) A variance to the Hawaii Public Health Regulations, Chapter 43, Section 7(b)(5) submitted on February 22, 1979 by the Governor.

(12) The following amendments to the plan were submitted on August 21, 1980, by the Governor.

(i) XII. Air Quality Surveillance Network.

(13) A variance to the Hawaii Public Health Regulations, Chapter 43, section 8 (b)(1) submitted on November 25, 1980 by the Governor.

(14) Previously approved on September 30, 1982 and now deleted without replacement: A variance of the Hawaii Public Health Regulations, chapter 43, section 8(b)(1) submitted on April 6, 1982, by the Governor.

(15) Hawaii State Lead SIP Revision submitted on October 29, 1982, by the State.

(16) The following amendments to the plan were submitted on December 20, 1982 by the State.

(i) Title 11—Department of Health, Chapter 60, Air Pollution Control.

(A) Amended sections 11–60–01 thru 11–60–29, 11–60–35 thru 11–60–38.

(B) Previously approved on August 18, 1983 and now deleted without replacement section 11–60–36.

[37 FR 10861, May 31, 1972, as amended at 41 FR 8959, Mar. 2, 1976; 44 FR 23828, Apr. 23, 1979; 44 FR 46274, Aug. 7, 1979; 46 FR 40513, Aug. 10, 1981; 47 FR 3111, Jan. 22, 1982; 48 FR 37403, Aug. 18, 1983; 62 FR 34648, June 27, 1997]

§ 52.621 Classification of regions.

The Hawaii plan was evaluated on the basis of the following classifications:

Air quality control region	Pollutant				
	Particulate matter	Sulfur oxides	Nitrogen dioxide	Carbon monoxide	Photochemical oxidants (hydrocarbons)
State of Hawaii	II	III	III	III	III

[37 FR 10860, May 31, 1972]

§ 52.622 [Reserved]

§ 52.623 Approval status.

With the exceptions set forth in this subpart, the Administrator approves Hawaii's plan for attainment and maintenance of the national standards. The State included various provisions in its plan to provide for the attainment of State ambient air quality standards. As described in the Governor's letters of January 28, May 8, and May 22, 1972, these provisions were included for information purposes only and were not

to be considered a part of the plan to implement national standards. Accordingly, these additional provisions are not considered a part of the applicable plan.

[37 FR 10861, May 31, 1972, as amended at 38 FR 12712, May 14, 1973; 39 FR 7280, Feb. 25, 1974]

§ 52.624 General requirements.

(a) The requirements of § 51.116(c) of this chapter are not met since the legal authority to provide for public availability of emission data is inadequate.

(b) *Regulation for public availability of emission data.* (1) Any person who cannot obtain emission data from the Agency responsible for making emission data available to the public, as specified in the applicable plan, concerning emissions from any source subject to emission limitations which are part of the approved plan may request that the appropriate Regional Administrator obtain and make public such data. Within 30 days after receipt of any such written request, the Regional Administrator shall require the owner or operator of any such source to submit information within 30 days on the nature and amounts of emissions from such source and any other information as may be deemed necessary by the Regional Administrator to determine whether such source is in compliance with applicable emission limitations or other control measures that are part of the applicable plan.

(2) Commencing after the initial notification by the Regional Administrator pursuant to paragraph (b)(1) of this section, the owner or operator of the source shall maintain records of the nature and amounts of emissions from such source and any other information as may be deemed necessary by the Regional Administrator to determine whether such source is in compliance with applicable emission limitations or other control measures that are part of the plan. The information recorded shall be summarized and reported to the Regional Administrator, on forms furnished by the Regional Administrator, and shall be submitted within 45 days after the end of the reporting period. Reporting periods are January 1 to June 30 and July 1 to December 31.

(3) Information recorded by the owner or operator and copies of this summarizing report submitted to the Regional Administrator shall be retained by the owner or operator for 2 years after the date on which the pertinent report is submitted.

(4) Emission data obtained from owners or operators of stationary sources will be correlated with applicable emission limitations and other control measures that are part of the applicable plan and will be available at the appropriate regional office and at other locations in the state designated by the Regional Administrator.

[39 FR 34536, Sept. 26, 1974, as amended at 40 FR 55329, Nov. 28, 1975; 51 FR 40676, Nov. 7, 1986]

§ 52.625 Legal authority.

(a) The requirements of § 51.230(f) of this chapter are not met, since sections 322–64(5) and 322–66 of the Hawaii Revised Statutes could, in some circumstances, prohibit the disclosure of emission data to the public. Therefore, sections 322–64(5) and 322–66 are disapproved.

[39 FR 34536, Sept. 26, 1974, as amended at 51 FR 40676, Nov. 7, 1986]

§ 52.626 Compliance schedules.

(a) [Reserved]

(b) The compliance schedules for the sources identified below are disapproved as not meeting the requirements of Subpart N of this chapter. The regulations cited are air pollution control regulations of the State.

Source	Location	Regulation sections involved	Date of adoption
Nanakuli Paving & Rock Co., Ltd.	Molokai	8, 13	7/27/73.
Kohala Corp	Halaula	8, 12	Do.

[39 FR 16348, May 8, 1974, as amended at 51 FR 40676, Nov. 7, 1986; 54 FR 25258, June 14, 1989]

§ 52.627–52.631 [Reserved]

§ 52.632 Significant deterioration of air quality.

(a) The requirements of sections 160 through 165 of the Clean Air Act are

not met, since the plan does not include approvable procedures for preventing the significant deterioration of air quality.

(b) Regulations for preventing significant deterioration of air quality. The provisions of § 52.21 except paragraph (a)(1) are hereby incorporated and made a part of the applicable State plan for the State of Hawaii.

[43 FR 26410, June 19, 1978, as amended at 45 FR 52741, Aug. 7, 1980; 68 FR 11322, Mar. 10, 2003; 68 FR 74488, Dec. 24, 2003]

§ 52.633 Visibility protection.

(a) The requirements of section 169A of the Clean Air Act are not met, because the plan does not include approvable procedures for protection of visibility in mandatory Class I Federal areas.

(b) Regulations for visibility monitoring and new source review. The provisions of §§ 52.26, 52.27 and 52.28, are hereby incorporated and made part of the applicable plan for the State of Hawaii.

(c) *Long-term strategy*. The provisions of § 52.29 are hereby incorporated and made part of the applicable plan for the State of Hawaii.

[50 FR 28553, July 12, 1985, as amended at 52 FR 45137, Nov. 24, 1987]

§ 52.634 Particulate matter (PM–10) Group III SIP.

(a) On September 14, 1988, the Governor of Hawaii submitted a revision to the State Implementation Plan (SIP) for implementing the required monitoring activities and other tasks necessary to satisfy the requirements of the PM–10 Group III SIP.

(b) The Hawaii Department of Health has committed to meet the ongoing requirements for PM–10 Group III areas.

[55 FR 18110, May 1, 1990]

Subpart N—Idaho

§ 52.670 Identification of plan.

(a) Title of plan: "Idaho Air Quality Implementation Plan."

(b) The plan was officially submitted on January 31, 1972.

(c) The plan revisions listed below were submitted on the dates specified.

(1) Miscellaneous additions (compliance schedules and non-regulatory provisions) to the plan submitted on February 23, 1972, by the Idaho Air Pollution Control Commission.

(2) Request for delegation of legal authority submitted on March 2, 1972, by the Governor.

(3) Compliance schedules submitted on April 12, 1972, by the Governor.

(4) Request for an 18-month extension for particulate matter in all AQCR's submitted on May 5, 1972, by the Governor.

(5) Miscellaneous additions (Non-regulatory) to the plan submitted on May 26, 1972, by the Idaho Air Pollution Control Commission.

(6) Appendices D and E of the plan submitted on June 9, 1972, by the Governor.

(7) Revisions to the Rules and Regulations for the Control of Air Pollution in Idaho submitted on February 15, 1973, by the Governor.

(8) Compliance schedules submitted on July 23, 1973, by the Governor.

(9) Amendment to Chapter IX of the plan to provide for review of indirect sources and a new Chapter XIV which sets forth the control strategy for attaining secondary particulate matter standards on October 16, 1973, by the Governor.

(10) Revisions to 1972 Session Laws, Chapter 347; 1973 Session Laws, Chapter 87, 136, 137, 138, 139, and 143; Chapters 18 and 52, Idaho Code; and the accompanying Attorney General's opinion submitted August 15, 1973, by the Governor.

(11) A new section 4 of Regulation A (General Provisions) and revised Regulation T (Air Pollution Sources Permits) of the Rules and Regulations for the Control of Air Pollution in Idaho (Chapter VII of the plan), an addition to Chapter XI of the plan to include administrative procedures for indirect source review, and compliance schedules submitted on July 1, 1974, by the Governor.

(12) Air quality maintenance area designation submitted on June 11, 1974, by the Idaho Department of Environmental and Community Services.

(13) An amendment to Regulation C (Ambient Air Quality Standards) and Regulation S (Control of Sulfur Oxide

Emissions from Combined Lead/Zinc Smelters) of the Rules and Regulations for the Control of Air Pollution in Idaho and revisions to Chapter IV and Appendix F of the Implementation Plan submitted on January 10, 1975, by the Governor.

(14) Revised sections 2 and 6 of Regulation A (General Provisions) of the Rules and Regulations for the Control of Air Pollution in Idaho submitted on January 24, 1975, by the Governor.

(15) Consent Order for Beker Industries submitted on July 28, 1975 by the Governor.

(16) On January 15, 1980 the Governor submitted the transportation portion of the Boise-Ada County carbon monoxide plan.

(17) On July 1, 1980 the Governor submitted a SIP revision containing a variance from the indirect source regulation for an urban renewal project located in downtown Boise, as well as an adjustment to the TCP which had been submitted to EPA in January 1980.

(18) On February 14, 1980 the State of Idaho Department of Health and Welfare submitted a plan revision to meet the requirements of Air Quality Monitoring 40 CFR part 58, subpart C, § 58.20.

(19) Revisions to the "Implementation Plan for the Control of Air Pollution in the State of Idaho" submitted by the Governor of Idaho on January 15, 1980: Chapter I "Introduction;" Chapter II "General Administration;" Chapter III "Emissions Inventory;" Chapter IV "Air Quality Monitoring;" Chapter V "Source Surveillance;" Chapter VI "Emergency Episode Plan;" Chapter VII "Approval Procedures for New and Modified Sources;" Chapter VIII "Non-Attainment Area Plans;" Chapter VIII–a "Silver Valley Non-Attainment Plan;" Chapter VIII–e "Soda Springs Non-Attainment Plan;" Appendix A.2 Legal Authority (Section 39–100, *Idaho Code);* Appendix A.3, Title I, Chapter I, Rules and Regulations for the Control of Air Pollution in Idaho, except indirect source review provisions (1–1002.37, 1–1002.76 and 1–1004), variance provisions (1–1007 and 1–1904) and "Sulfur Dioxide Emission Limitations for Combined Zinc and Lead Smelters" (1–1851 through 1–1868); Appendix B "Emission Inventory, Ada County Carbon Monoxide Non-Attainment Area;" Appendix G "Permits—Silver Valley" (six permits); and Appendix K "Permits—Soda Springs" (four permits).

(20) Chapter VIII–b "Lewiston Non-Attainment Plan" submitted by the Governor of Idaho on January 15, 1980. On December 4, 1980, the Governor submitted revised pages 31–39, an operating permit for a kraft pulp and paper mill (Appendix H.1), operating permits for two grain loading terminals (Appendices H.3 and H.4), and an operating permit for an asphalt plant (Appendix H.5). On February 5, 1981 the Governor further revised the nonattainment area plan by submitting a permit for a wood products operation (Appendix H.2).

(21) Chapter VIII–d "Pocatello TSP Non-Attainment Plan" submitted by the Governor of Idaho on March 7, 1980. This submittal included operating permits for an elemental phosphorus plant (Appendix J.1), a phosphate fertilizer manufacturing plant (Appendix J.2), and a Portland cement plant (Appendix J.3). On February 5, 1981, the Governor submitted a revised Chapter VIII–d.

(22) On February 3, 1984 the State of Idaho Department of Health and Welfare submitted a revision to add a lead maintenance strategy to the Idaho Implementation Plan.

(23) On May 29, 1984, the State of Idaho Department of Health and Welfare submitted the Boise-Ada County carbon monoxide attainment plan as an official State Implementation Plan revision. The submittal was then supplemented on January 3, 1985.

(24) A revised Chapter VII *Approval Procedures for New and Modified Facilities;* revised sections 1–1002, 1–1012, 1–1013, 1–1014, and 1–1101 of Appendix A. 3 "Title 1, Chapter 1, *Rules and Regulations for the Control of Air Pollution in Idaho Manual;*" and the repeal of sections 1–1003, 1–1102 through 1–1112, and 1–1900 through 1–1906 of Appendix A. 3 "Title 1, Chapter 1, *Rules and Regulations for the Control of Air Pollution in Idaho Manual;*" of the Implementation Plan for the Control of Air Pollution in the State of Idaho, submitted by the Director of the State of Idaho Department of Health and Welfare on April 19, 1985. (Sections 1–1003, 1–1102 through 1–1112, and 1–1900 through 1–1906 of Appendix A. 3 "Title 1, Chapter 1, *Rules and Regulations for the Control of Air*

Pollution in Idaho Manual" were previously approved by EPA at 40 CFR 52.670(c)(19).) An April 3, 1986, commitment letter from the Director of the State of Idaho Department of Health and Welfare regarding stack height provisions.

(i) Incorporation by reference. (A) Revised sections 1–1002, 1–1012, 1–1013, 1–1014, and 1–1101 of Appendix A. 3, "Title 1, Chapter 1, *Rules and Regulations for the Control of Air Pollution in Idaho Manual*" of the Implementation Plan for the Control of Air Pollution in the State of Idaho, as adopted by the Idaho Board of Health and Welfare on November 1, 1984. An April 3, 1986, commitment letter from the Director of the State of Idaho Department of Health and Welfare regarding stack height provisions.

(ii) Other materials. (A) Revised Chapter VII *Approval Procedures for New and Modified Facilities* of the Implementation Plan for the Control of Air Pollution in the State of Idaho, submitted by the Director of the Idaho Department of Health and Welfare on April 19, 1985. (This revised chapter replaces an earlier version which was approved by EPA and incorporated by reference at 40 CFR 52.670(c)(19).)

(B) Sections 1–1003, 1–1102 through 1–1112, and 1–1900 through 1–1906 of Appendix A. 3 "Title 1, Chapter 1, *Rules and Regulations for the Control of Air Pollution in Idaho*," of the Implementation Plan for the Control of Air Pollution in the State of Idaho, repealed by the Idaho Board of Health and Welfare on November 1, 1984. (These sections, noted as repealed, replace the earlier versions which were approved by EPA and incorporated by reference at 40 CFR 52.670(c)(19).)

(25) On March 27, 1987, the State of Idaho Department of Health and Welfare submitted revised rules regulating the use of stack heights and dispersion techniques (section 16.01.1002.94 and section 16.01.1014) as revisions to the Idaho state implementation plan. Additional revisions included clarifications to section 16.01.1009 (Total Compliance), and section 16.01.1201.03 (Visible Emissions-Exception).

(i) Incorporation by reference.

(A) March 27, 1987 letter from the State of Idaho Department of Health and Welfare to EPA, Region 10.

(B) Section 16.01.1002.94 (Stack), section 16.01.1014 (Stack Heights and Dispersion Techniques), section 16.01.1009 (Total Compliance) and section 16.01.1201.03 (Visible Emissions-Exception) adopted by the State of Idaho Department of Health and Welfare on February 11, 1987.

(26) On June 15, 1990, the Administrator of the Idaho Department of Health and Welfare submitted amendments to State of Idaho's Rules and Regulations for the Control of Air Pollution in Idaho Manual as revisions to the Idaho state implementation plan as follows: Idaho Administrative Procedures Act, Section 16.01.01002 Definitions, Section 16.01.01012 Procedures and Requirements for Permits to Construct and Operating Permits, and Section 16.01.01101 Air Quality Standards and Area Classification.

(27) On September 4, 1992, the Administrator of the Idaho Department of Health and Welfare submitted a revised and recodified Rules and Regulations for the Control of Air Pollution in Idaho Manual (Idaho Administrative Procedures Act Sections 16.01.01000 through 16.01.01999) as a revision to the Idaho state implementation plan.

(i) Incorporation by reference.

(A) June 15, 1990, letter from the Administrator of the Idaho Department of Health and Welfare to EPA Region 10 submitting amendments to the Idaho state implementation plan.

(B) September 4, 1992, letter from the Administrator of the Idaho Department of Health and Welfare to EPA Region 10 submitting amendments to the Idaho state implementation plan.

(C) Idaho's Rules and Regulations for the Control of Air Pollution in Idaho Manual (except for sections IDAPA 16.01.01007 Variances, IDAPA 16.01.01853 through 16.01.01856 Combined Zinc and Lead Smelters, IDAPA 16.01.0951 through 16.01.01968 Regulation of Standards of Performance for New Stationary Sources, and IDAPA 16.01.01997 Confidentiality of Records) as adopted by the Board of the Idaho Department of Health and Welfare on July 30, 1992, and effective on August 21, 1992.

(28) On April 14, 1992, the State of Idaho submitted a revision to the SIP for Pinehurst, ID, for the purpose of bringing about the attainment of the national ambient air quality standards for particulate matter with an aerodynamic diameter less than or equal to a nominal 10 micrometers. This submittal includes an additional area in Shoshone County adjacent to the City of Pinehurst which EPA designated nonattainment and moderate for PM–10 on January 20, 1994.

(i) Incorporation by reference.

(A) April 7, 1992 letter from Idaho Department of Health and Welfare to EPA Region 10 submitting the Pinehurst Particulate Air Quality Improvement Plan as a revision to the Implementation Plan for the Control of Air Pollution in the State of Idaho. The plan has been adopted in accordance with the authorities and requirements of the Federal Clean Air Act and the Idaho Environmental Protection and Health Act (Idaho Code section 39–10/*et seq*).

(B) SIP revision for Pinehurst Particulate Air Quality Improvement Plan, February 5, 1992 (adopted on April 7, 1992).

(29) On June 29, 1994, the Idaho Department of Health and Welfare submitted a CO State Implementation Plan for Northern Ada County, Idaho.

(i) Incorporation by reference.

(A) June 29, 1994 letter from Idaho Department of Health and Welfare to EPA Region 10 submitting the CO SIP for Northern Ada County, Idaho.

(B) Minor Revision of the Northern Ada County, Idaho 1984 State Implementation Plan for CO, June 1994 (including Ada County Ordinance 228, City of Boise Ordinance 5273, City of Meridian Ordinance 547, City of Garden City Ordinance 558, and City of Eagle Ordinance 177), as adopted by the Idaho Department of Health and Welfare on June 28, 1994.

(30) On January 7, 1994, the Administrator for the Idaho Department of Health and Welfare, Division of Environmental Quality, submitted the State PROGRAM as a revision to the Idaho SIP.

(i) Incorporation by reference.

(A) The January 3, 1994 letter from the Administrator of the Idaho Department of Health and Welfare, Division of Environmental Quality, submitting the PROGRAM to EPA.

(B) The State Implementation Plan Revision to Establish a State Small Business Stationary Source Technical and Environmental Compliance Assistance Program (which includes the text of Idaho Code 39–118E, Small Business Assistance, signed into law Senate bill 1236 by Idaho Governor, Cecil D. Andrus, on March 29, 1993), dated December 29, 1993, and adopted on January 3, 1994.

(31) On November 14, 1991, and on December 30, 1994, the Idaho Department of Health and Welfare (IDHW) submitted revisions to the Idaho State Implementation Plan (SIP) for the Northern Ada County/Boise Particulate (PM_{10}) Air Quality Improvement Plan.

(i) Incorporation by reference.

(A) November 14, 1991, letter from the IDHW Administrator to the EPA Region 10 Regional Administrator submitting a revision to the Idaho SIP for the Northern Ada County/Boise Particulate Air Quality Improvement Plan; The Northern Ada County Boise Particulate (PM_{10}) Air Quality Improvement Plan adopted on November 14, 1991.

(B) December 30, 1994, letter from the IDHW Administrator to the EPA Region 10 Regional Administrator including a revision to the Idaho SIP for the Northern Ada County/Boise PM_{10} Air Quality Improvement Plan; Appendix C–1, Supplemental Control Strategy Documentation, Northern Ada County/Boise PM_{10} Air Quality Improvement Plan, adopted December 30, 1994, with the following attachments: Garden City Ordinances #514 (May 14, 1987), #533 (January 10, 1989) and #624 (September 13, 1994); Meridian Ordinance #667 (August 16, 1994); Eagle Ordinance #245 (April 26, 1994); Ada County Ordinance #254 (November 3, 1992); and Table Ordinance-1 (December 30, 1994).

(32) On December 6, 2000, the Idaho Department of Environmental Quality submitted amendments to State of Idaho's Rules and Regulations for the Control of Air Pollution in Idaho as revisions to the Idaho state implementation plan as follows: sections 58.01.01.563 through 58.01.01.574.

(i) Incorporation by reference.

(A) Section 58.01.01.563 Transportation Conformity, Section 58.01.01.564 Incorporation by Reference, Section 58.01.01.565 Abbreviations, Section 58.01.01.566 Definitions for the Purpose of Sections 563 Through 574 and 582, Section 58.01.01.567 Agencies Affected by Consultation, Section 58.01.01.568 ICC Member Roles in Consultation, Section 58.01.01.569 ICC Member Responsibilities in Consultation, Section 58.01.01.570 General Consultation Process, Section 58.01.01.571 Consultation Procedures, Section 58.01.01.572 Final Conformity Determinations by USDOT, Section 58.01.01.573 Resolving Conflicts, Section 58.01.01.574 Public Consultation Procedures.

(33) On February 9, 2001, the Idaho Department of Environmental Quality submitted amendments to State of Idaho's Rules and Regulations for the Control of Air Pollution in Idaho as revisions to the Idaho state implementation plan as follows:

Section 58.01.01.582

(i) Incorporation by reference.

(A) Section 58.01.01.582 Interim Conformity Provisions for Northern Ada County Former Nonattainment Area for PM–10.

(34) On February 9, 2001, the Idaho Department of Environmental Quality submitted amendments to State of Idaho's Rules and Regulations for the Control of Air Pollution in Idaho as revisions to the Idaho state implementation plan as follows: Section 58.01.01.204.

(i) Incorporation by Reference.

(A) IDAPA 58.01.01.204 Permit Requirements for New Major Facilities or Major Modifications in Nonattainment Areas and in the Former PM–10 Northern Ada County Nonattainment Area (as Defined in Section 582), state adopted January 26, 2001.

(35) On August 16, 1996, the State of Idaho adopted and submitted a revision to the SIP for Sandpoint, Idaho, for the purpose of bringing about the attainment of the national ambient air quality standards for particulate matter with an aerodynamic diameter less than or equal to a nominal 10 micrometers.

(i) Incorporation by reference.

(A) Ordinance No. 939, Material Specifications for Street Sanding Material, as adopted by the City of Sandpoint on February 22, 1994.

(B) Ordinance No. 965, Solid Fuel Heating Appliance Ordinance, as adopted by the City of Sandpoint on February 21, 1995.

(C) The following terms and conditions limiting particulate matter emissions in the following permits:

(*1*) State of Idaho Air Pollution Operating Permit for Lake Pre-Mix concrete, Permit No. 777–00182, issued May 17, 1996, the following conditions for the cement silo vent: 1.1, 2.1.1, 2.1.2, 3.1.1, and 3.1.2.

(*2*) State of Idaho Air Pollution Operating Permit for Interstate Concrete & Asphalt, Permit No. 017–00048, issued August 2, 1999, the following conditions: for the asphalt plant, 2.2, 3.1.1, 4.1, 4.1.1, 4.1.2, 4.2.1 (as it applies to the hourly PM_{10} emission limit in Appendix A), 4.2.2, 4.2.2.1, 4.2.2.2, and 4.2.2.3; for the concrete batch plant, 2.1, 3.1.1, 4.1, 4.1.1, and 4.1.2; Appendix A (as it applies to PM_{10} emission rates after 7/1/96) and Appendix B (as it applies after 7/1/96).

(*3*) State of Idaho Department of Environmental Quality Air Quality Tier II Operating Permit for Louisiana-Pacific Corporation, Permit No. 017–00003, issued October 31, 2001, the following conditions: for the Kipper and Sons Hog Fuel Boiler, 2.3 (as it applies to PM_{10}), 2.5, 2.7, 2.13, 2.14, 2.17, 2.19; Cleaver-Brooks Natural Gas-Fired Boilers, 3.2 (as it applies to PM_{10}); Pneumatic Conveyance System, 4.2, 4.4, 4.7; Drying Kilns, 5.2, 5.4, 5.5; Fugitive Emission Sources, 6.5, 6.7, 6.13; and the Appendix (as it applies to PM_{10}).

(ii) Additional Materials.

(A) Sandpoint PM_{10} Air Quality Improvement Plan, adopted August 16, 1996.

(36) [Reserved]

(37) On May 17, 1994, May 11, 1995, November 21, 1996, February 28, 1997, December 18, 1997, April 9, 1998, May 5, 1999, December 5, 2000, and May 30, 2002, the Idaho Department of Environmental Quality submitted amendments to State of Idaho Rules for Control of Air Pollution in Idaho (IDAPA 58.01.01) as revisions to the Idaho State implementation plan.

(i) Incorporation by Reference.

(A) IDAPA 58.01.01 as in effect on March 30, 2001 except for the following provisions: section 000; section 002; section 003; section 008; section 009; section 010; subsections 107.03; section 128; sections 140 through 149; section 161; subsection 203.03; section 209; section 210; section 214; subsection 222.03; section 223; sections 300 through 387; subsection 401.01.a. and 401.04; sections 440 and 441; sections 525 through 538; sections 552, 553, 556, 558, and 561; subsection 577.06; sections 585, 586, 587, 590 and 591; section 700; section 710; sections 750 and 751; sections 775 and 776; section 818; section 819; section 820; subsection 824.01; sections 835 through 839; and sections 855 through 862.

(B) IDAPA 58.01.01 sections 209 and 700 as in effect on April 5, 2000.

(C) IDAPA 58.01.01 sections 552, 553, 556, 558, and 561 as in effect on March 15, 2002.

(38) The Idaho Department of Environmental Quality (Idaho DEQ, the State, or Idaho) submitted a PM_{10} maintenance plan and redesignation request for the Ada County/Boise, Idaho area on September 27, 2002, and provided supplemental information on July 10, 2003 and July 21, 2003.

(i) Incorporation by reference.

(A) The following terms and conditions limiting particulate matter emissions in the following permits:

(*1*) State of Idaho Air Pollution Operating Permit for LP Wood Polymers, Inc. Permit No. 001–00115, issued July 12, 2002, the following conditions: 1.1, 1.3, 3.1, and the Appendix.

(*2*) State of Idaho Air Pollution Operating Permit for Consolidated Concrete Company, Permit No. 001–00046, issued December 03, 2001, the following conditions: 1.1, 1.3, 2.3, 3.1, 3.2, and the Appendix.

(*3*) State of Idaho Air Pollution Operating Permit for Crookham Company, Permit No. 027–00020, issued January 18, 2002, the following conditions: 1.1, 1.3, 2.1, 2.3, 3.1, 3.1.1, 3.1.2, 3.2, and the Appendix.

(*4*) State of Idaho Air Pollution Operating Permit for Double D Service Center, Permit No. 001–00168, issued February 4, 2002, the following conditions: 1.1, 1.3, 3.1, 3.2.1, 3.2.2, 3.2.3, and the Appendix.

(*5*) State of Idaho Air Pollution Operating Permit for Plum Creek Northwest Lumber, Inc., Permit No. 001–00091, issued July 12, 2002, the following conditions: 1.1, 1.3, 2.1.2, 3.1, and the Appendix.

(*6*) State of Idaho Air Pollution Operating Permit for C. Wright Construction, Inc., Permit No. T2–000033, issued July 08, 2003, the following conditions: 2 (heading only), 2.5, (2.12, Table 2.2 as it applies to PM_{10}), 2.14, 3 (heading only), 3.3, Table 3.2, 3.4, 3.5, 3.6, 3.7, 3.8, 3.10, 4 (heading only), 4.2, 4.3, 4.4, 4.7, 5, and Table 5.1.

(*7*) State of Idaho Air Pollution Operating Permit for Nelson Construction Co., Permit No. T2–020029, issued July 21, 2003, the following conditions: 2 (heading only), 2.12, 2.14, 3 (heading only, 3.3, 3.4, 3.6, 3.7, 3.9, 3.10, 3.11, 3.12, 4 (heading only), 4.3, 4.4, 4.5, 4.6, 5, and Table 5.1.

(*8*) State of Idaho Air Pollution Operating Permit for Mike's Sand and Gravel, Permit No. 001–00184, issued July 12, 2002, the following conditions: 1.1, 1.3, 2.2.1, 3.1, and the Appendix.

(*9*) State of Idaho Air Pollution Operating Permit for Idaho Concrete Co., Permit No. T2–020031, issued July 8, 2003, the following conditions: 2 (heading only), 2.5, 2.13, 3 (heading only), 3.3, 3.4, 3.6, 3.7, 3.8, 4 (heading only), and Table 4.1.

(*10*) State of Idaho Air Pollution Operating Permit for Idaho Concrete Co., Permit No T2–020032, issued July 8, 2003, the following conditions: 2 (heading only), 2.5, 2.13, 3 (heading only), 3.3, 3.4, 3.6, 3.7, 3.8, 4 (heading only), and Table 4.1.

(*11*) State of Idaho Air Pollution Operating Permit for Idaho Concrete Co., Permit No. T2–020033, issued July 8, 2003, the following conditions: 2 (heading only), 2.5, 2.13, 3 (heading only), 3.3, 3.4, 3.6, 3.7, 3.8, 4 (heading only), and Table 4.1.

(*12*) State of Idaho Air Pollution Operating Permit for The Amalgamated Sugar Company LLC, Permit No. 027–00010, issued September 30, 2002, the following conditions: 2 (heading only), (2.7, Table 2.2 as it applies to PM_{10},) 2.10, 2.10.1, 2.10.2, 2.11, 2.11.1, 2.11.2, 2.11.3, 2.11.4, 2.11.5, 2.12, 2.12.1, 2.12.2, 2.12.3, 2.13, 2.13.1, 2.13.2, 2.13.3, 2.14, 2.14.1, 2.14.2, 2.16, 3 (heading only), (3.3,

Table 3.2 as it applies to PM_{10}), 3.5, 3.7, 3.8, 3.8.1, 3.8.2, 3.8.3, 3.8.4, 3.8.5, 3.8.6, 3.8.7, 3.8.8, 3.9, 4 (heading only), (4.3, Table 4.1 as it applies to PM_{10}), 4.5, 4.6, 4.7, 5 (heading only), (5.3, Table 5.3 as it applies to PM_{10}), 5.5, 5.9, 5.9.1, 5.9.2, 5.9.3, 5.9.4, 5.9.5, 5.9.6, 5.9.7, 5.9.8, 5.9.9, 5.10, 5.11, 6 (heading only), 6.3, Table 6.1, 6.5, 6.6, 6.7, 6.7.1, 6.7.2, 6.8, 7 (heading only), (7.3, Table 7.1 as it applies to PM_{10}), 7.5, 7.7, 7.7.1, 7.7.2, 7.8, 8 (heading only), 8.3, Table 8.1, 8.5, 8.7, 8.7.1, 8.7.2, 8.8, 9 (heading only), 9.3, Table 9.1, 9.5, 9.7, 9.7.1, 9.7.2, 9.8, 10 (heading only), 10.3, Table 10.1, 10.6, 10.8, 10.8.1, 10.8.2, 10.9, 11 (heading only), 11.3, Table 11.2, 11.6, 11.8, 11.8.1, 11.8.2, 11.9, 12 (heading only), 12.3, Table 12.1, 12.5, 12.7, 12.7.1, 12.7.2, 12.8, 13 (heading only), 13.1, Table 13.1 (except as it applies to condition 13.3), (13.2, Table 13.2 as it applies to PM_{10}), 13.2.1, 13.4, 13.4.1, 13.4.2, 13.4.3, 13.5, 13.5.2, 13.5.3, 13.6, 13.6.1, 13.6.2, 13.7, 13.7.1, 13.7.2, 13.8, 13.8.1, 13.8.2, 13.8.3, 13.10, and 13.11.

[37 FR 10861, May 31, 1972, as amended at 41 FR 8959, Mar. 2, 1976; 41 FR 23202, June 9, 1976; 45 FR 70261, Oct. 23, 1980; 46 FR 15136, Mar. 4, 1981; 47 FR 32533, July 28, 1982; 49 FR 18833, May 3, 1984; 50 FR 23811, June 6, 1985; 51 FR 22810, June 23, 1986; 53 FR 48540, Dec. 1, 1988; 58 FR 39447, July 23, 1993; 59 FR 43751, Aug. 25, 1994; 59 FR 47804, Sept. 19, 1994; 59 FR 61549, Dec. 1, 1994; 60 FR 27893, May 26, 1995; 61 FR 27023, May 30, 1996; 66 FR 18876, Apr. 12, 2001; 66 FR 19724, Apr. 17, 2001; 67 FR 43012, June 26, 2002; 68 FR 2222, Jan. 16, 2003; 68 FR 61109, Oct. 27, 2003]

§ 52.671 Classification of regions.

The Idaho plan was evaluated on the basis of the following classifications:

Air quality control region	Pollutants				
	Particulate matter	Sulfur oxides	Nitrogen dioxide	Carbon monoxide	Ozone
Eastern Idaho Intrastate	I	II	III	III	III.
Eastern Washington Northern Idaho Interstate (Idaho)	I	II	III	III	III.
Idaho Intrastate	I	III	III	III	III.
Metropolitan Boise Intrastate	II	III	III	I	III.

[37 FR 10861, May 31, 1972, as amended at 45 FR 70261, Oct. 23, 1980; 47 FR 32534, July 28, 1982]

§ 52.672 Approval of plans.

(a) *Carbon Monoxide.* (1) EPA approves as a revision to the Idaho State Implementation Plan, the Limited Maintenance Plan for the Northern Ada County Carbon Monoxide Not-Classified Nonattainment Area, submitted by the State on January 17, 2002.

(2) [Reserved]

(b) *Lead.* [Reserved]

(c) *Nitrogen Dioxide.* [Reserved]

(d) *Ozone.* [Reserved]

(e) *Particulate Matter.* (1) EPA approves as a revision to the Idaho State Implementation Plan, the Northern Ada County PM_{10} SIP Maintenance Plan, adopted by the State on September 26, 2002.

(2) [Reserved]

(f) *Sulfur Dioxide.* [Reserved]

[67 FR 65718, Oct. 28, 2002, as amended at 68 FR 61110, Oct. 27, 2003]

§ 52.673 Approval status.

With the exceptions set forth in this subpart, the Administrator approves Idaho's plan for the attainment and maintenance of the national standards.

§ 52.674 [Reserved]

§ 52.675 Control strategy: Sulfur oxides—Eastern Idaho Intrastate Air Quality Control Region.

(a)(1) Regulation R of the Rules and Regulations for the Control of Air Pollution in Idaho, which is part of the sulfur dioxide (SO_2) control strategy, is disapproved since it is inconsistent with the purposes and provisions of subpart G of this chapter. These requirements are not met by Regulation R in that the SO_2 control strategy contained therein is not adequate for the attainment and maintenance of SO_2 national ambient air quality standards (NAAQS).

(2) Rules 1–1801 through 1–1804 (Rules for Control of Sulfur Oxide Emissions from Sulfuric Acid Plants) of the "Rules and Regulations for the Control of Air Pollution in Idaho" are inadequate to ensure attainment and maintenance of Sulfur Dioxide National Ambient Air Quality Standards in the Eastern Idaho Intrastate Air Quality Control Region. Special limits have previously been established for certain existing acid plants in this Air Quality Control Region (§§ 52.670(c)(15) and 52.675(b)). Therefore, Rules 1–1801 through 1–1804 are approved except as they apply to existing acid plants with approved or promulgated emission limits that are more stringent than the limit found in 1–1802.

(b) Regulation for control of sulfur dioxide (SO_2) emissions: Sulfuric Acid Plants. (1) The provisions of this paragraph shall apply to the owner(s) and operator(s) of The J. R. Simplot Company's Minerals and Chemical Division, located in Power County, Idaho, in the Eastern Idaho Intrastate Air Quality Control Region.

(2) The owner(s) and operator(s) of The J. R. Simplot Company facility shall utilize best engineering techniques in the operation of their plant to prevent fugitive SO losses. Such techniques shall include but are not limited to:

(i) Operating and maintaining all conducts, flues, and stacks in a leakfree condition.

(ii) Operating and maintaining all process equipment and gas collection systems in such a fashion that leakage of SO_2 gases will be prevented to the maximum extent possible.

(3) The owner(s) and operator(s) of The J. R. Simplot Company facility shall limit SO_2 emissions from their sulfuric acid plants per the following:

(i) The combined SO_2 emissions from the designated 100 and 200 sulfric acid plants shall not exceed 2 kilograms (kg) per metric ton (4 pounds per ton) of 100 percent sulfuric acid produced.

(ii) The SO_2 emissions from the designated 300 sulfuric acid plant and stack shall not exceed 994 kg per hour (2190 pounds per hour).

(4) (i) The owner(s) and operator(s) of The J. R. Simplot Company shall achieve compliance with the requirements specified in paragraphs (b)(2) and (b)(3) of this section in accordance with the following schedule:

(A) Advise EPA as to status of contract(s) and construction schedules for pollution abatement projects within 30 days of the effective date of this regulation.

(B) Attain final compliance by July 31, 1976.

(ii) A performance test of the 300 acid plant shall be necessary to determine whether compliance has been achieved with the requirements of paragraph (b)(3) of this section. Such test must be completed within 15 days of the final compliance date specified in paragraph (b)(4)(i) of this section. Notice must be given to the Administrator at least 10 days prior to such a test to afford him an opportunity to have an observer present.

(iii) Within 60 days after achieving the maximum production rate at which the 100 and 200 acid plant will be operated, but not later than 180 days after initial start-up of these plants and at such other times as may be required by the Administrator under section 114 of the Clean Air Act, the owner(s) and operator(s) of the facility shall conduct performance test(s) in accordance with the requirements of 40 CFR 60.8.

(iv) If the owner(s) and operator(s) of the J. R. Simplot Company facility are presently in compliance with the requirements of paragraphs (b)(2) and (b)(3) of this section or in compliance with a portion of these requirements, such compliance shall be certified to the Administrator within 15 days following the date of the publication of these requirements as a final regulation in the FEDERAL REGISTER. If the owner(s) or operator(s) of The J. R. Simplot Company achieve compliance prior to July 31, 1976, such compliance shall be certified to the Administrator within 15 days of the date of achieving compliance. The Administrator may request whatever supporting information he considers necessary to determine the validity of the certification.

(5) (i) By no later than September 30, 1976, the owner(s) and operator(s) of The J. R. Simplot Company facility shall install, calibrate, maintain and operate measurement system(s) for:

(A) Continuously monitoring and recording SO_2 concentration rates in each sulfuric acid plant discharge stack per the requirements of 40 CFR 60.13 and 60.84.

(B) Continuously monitoring and recording gas volumetric flow rates in the exhaust stack of the designated 300 sulfuric acid plant.

(ii) By no later than October 30, 1976, and at such other times following that date as the Administrator may specify, the SO_2 concentration measurement system(s) and stack gas volumetric flow rate system(s) installed and used pursuant to this paragraph shall be demonstrated to meet the measurement system performance specifications prescribed in 40 CFR 60.13 and Appendix E to this part, respectively. The Administrator shall be notified at least 10 days prior to the start of this field test period to afford the Administrator the opportunity to have an observer present.

(iii) The sampling point for monitoring the concentration of SO_2 emissions shall be in the duct at the centroid of the cross section of the discharge stack if the cross sectional area is less than 4.65 m^2 (50 ft^2) or at a point no closer to the wall than 0.91 m (3 ft) if the cross sectional area is 4.65 m^2 (50 ft^2) or more. The monitor sample point shall be representative of the average concentration in the duct.

(iv) The measurement system(s) shall be maintained, operated and calibrated in accordance with the methods prescribed by the manufacturers. Records of maintenance and/or calibration shall be kept and submitted to the Administrator upon request. These records shall clearly show instrument readings before and after such calibration and/or maintenance.

(v) The owner(s) and operator(s) of The J. R. Simplot Company facility shall maintain a daily record of three hour average emission rate measurements for each sulfuric acid plant. Three hour average emission rates shall be calculated for each day beginning at midnight. For the 100 and 200 acid plants, the calculations shall be in conformance with 40 CFR 60.84. For the 300 acid plant, average SO_2 emission rates expressed in kg SO_2 per hour shall be calculated. The results of these calculations for each month shall be submitted to the Administrator within 15 days following the end of each month. Such submission shall identify each period of excess emissions that occurred and the nature and cause of any malfunction (if known), the corrective action taken or preventative measures adopted. The records of such measurements including strip charts and other appropriate raw data shall be retained for a minimum of two years following the date of such measurements.

(vi) The continuous monitoring and recordkeeping requirements of paragraph (b)(5) of this section shall become applicable September 30, 1976.

(6)(i) Compliance with the requirements set forth in paragraph (b)(3) of this section shall be determined using the emission rates measured by the continuous measurement system(s) installed, calibrated, maintained and operated in accordance with the requirements of paragraph (b)(5) of this section.

(ii) At the Administrator's discretion, compliance may also be determined using the manual source test methods per 40 CFR 60.85 and Appendix A to part 60 of this title. Emission rates for each stack shall be expressed in units consistent with those in paragraph (b)(3) of this section.

(iii) A violation of the requirements of paragraph (b)(3) of this section shall occur whenever the SO_2 emission rates determined according to paragraph (b)(6)(i) or (b)(6)(ii) of this section exceed the corresponding SO_2 emission rates specified in paragraph (b)(3) of this section.

(7) The owner(s) and operator(s) of The J. R. Simplot Company facility shall by September 30, 1976, install, calibrate, maintain and operate a network for continuously monitoring ground level ambient SO_2 concentrations and wind speed and direction.

(i) The monitoring network shall consist of at least four ambient SO_2 monitoring stations and one meteorological station placed at locations approved by the Administrator.

(ii) The SO_2 monitoring network shall be consistent with automated equivalent methods for measurement of ambient concentrations of SO_2 as defined in part 53 of this chapter.

(iii) The monitoring network installed and used pursuant to this subparagraph shall be maintained, operated and calibrated in accordance with the methods prescribed by the manufacturers. Records of maintenance and/or calibration shall be kept and submitted to the Administrator upon request. These records shall clearly show instrument readings before and after such calibration and/or maintenance.

(iv) The owner(s) and operator(s) of The J. R. Simplot Company facility shall maintain a daily record of all measurements required by this subparagraph. Strip charts and other raw data from the monitoring network shall be retained for a minimum of two years following the date of such measurement.

(v) The owner(s) and operator(s) of The J. R. Simplot Company shall calculate hourly average ambient SO_2 concentrations, wind speed, and wind direction from each monitoring station and submit such values to the Administrator within 15 days following the end of each month.

(vi) The continuous monitoring and recordkeeping requirements of paragraph (b)(7) of this section shall become applicable September 30, 1976 and shall remain applicable until such time as the Administrator declares that an adequate ambient air data base has been established, which shall be no earlier than at least one calendar year.

(vii) Within 90 days of the Administrator's declaration of an adequate data base, Simplot shall submit to the Administrator a technical analysis of the degree of permanent control required on the 300 acid plant to ensure attainment and maintenance of NAAQS.

(8) Nothing in paragraph (b) of this section shall be construed to relieve the owner(s) and operator(s) of The J. R. Simplot Company to comply with any applicable requirements of part 60 of this title. In the event of conflicting requirements or interpretations between part 60 of this title and this paragraph, the more restrictive interpretation or requirement shall apply.

(9) In the event that measurement systems cannot be installed and operational by the date specified in this section, The J. R. Simplot Company shall propose the earliest possible date by which such requirements can be met. Such proposal shall include adequate justification and supporting documentation.

[41 FR 23202, June 9, 1976, as amended at 47 FR 32534, July 28, 1982; 51 FR 40676, Nov. 7, 1986]

§ 52.676 [Reserved]

§§ 52.677–52.678 [Reserved]

§ 52.679 Contents of Idaho State Implementation Plan.

IMPLEMENTATION PLAN FOR THE CONTROL OF AIR POLLUTION IN THE STATE OF IDAHO

Chapter I—Introduction (submitted 1–15–80)
Chapter II—Administration (submitted 1–15–80)
Chapter III—Emission Inventory (submitted 1–15–80)
Chapter IV—Air Quality Monitoring (submitted 1–15–80, and 2–14–80)
Chapter V—Source Surveillance (submitted 1–15–80)
Chapter VI—Emergency Episode Plan (submitted 1–15–80)
Chapter VIII—Nonattainment Area Plans
- VIII-a—Silver Valley TSP Nonattainment Area Plan (submitted 1–15–80): EPA effective 7–28–82.
- VIII-b—Lewiston TSP Nonattainment Plan (submitted 1–15–80, 12–4–80, and 2–5–81): EPA effective 7–28–82.
- VIII-c—Transportation Control Plan for carbon monoxide, Ada County (submitted 5–24–84, 1–3–85, 3–25–85, and 6–29–94): EPA effective 7–28–82, 8–5–85, and 1–30–95.
- VIII-d—Pocatello TSP Nonattainment Plan (submitted 3–7–80, and 2–5–81): EPA effective 7–28–82.
- VIII-e—Soda Springs TSP Nonattainment Plan (submitted 1–15–80): EPA effective 7–28–82.
- VIII-f—Pinehurst PM–10 Nonattainment Plan (4–14–92): EPA effective 10–24–94.
- VIII-g—North Ada County PM10 Nonattainment Area Plan (submitted 11–14–91, 12–30–94, and 7–13–95): EPA effective 7–29–96.
- VIII-h—Fort Hall PM–10 Nonattainment Area Plan (FIP): EPA effective 9–22–00.
- VIII-i—Sandpoint PM10 Nonattainment Area Plan (submitted 8–16–96): EPA effective 8–26–02.
- VIII-j—North Ada County CO Limited Maintenance Plan (submitted 1–17–02): EPA effective 11–27–02.

Chapter IX—Reserved
Chapter X—Plan for Maintenance of National Ambient Air Quality Standards for Lead (submitted 2–3–84): EPA effective 6–4–84.

Small Business Assistance Program (submitted 1–3–94): EPA effective 11–18–94.

Appendix A Legal Authority and other General Administrative Matters (submitted 1–15–80)

Appendix A.2 Idaho Environmental Protection and Health Act, Idaho Code Section 39–101 *et seq.* (submitted 3–15–01)

Appendix A.3 Idaho Administrative Procedures Act (IDAPA) Chapter 58, Rules for the Control of Air Pollution in Idaho, previously codified at IDAPA Chapter 39 (submitted 5–17–94, 5–11–95, 11–21–96, 2–28–97, 12–18–97, 4–9–98, 5–5–99, 12–5–00, and 5–30–02)

EPA-approved rules which are incorporated by reference are listed in the table below:

Citation	Title	State effective date
	IDAPA 58—Department of Environmental Quality	
	58.01.01—Rules for the Control of Air Pollution in Idaho	
001.	Title and Scope	5/1/94
004.	Catchlines	5/1/94
005.	Definitions	5/1/94
006.	General Definitions	4/5/00
		3/20/97
		5/1/95
		5/1/94
007.	Definitions for the Purposes of Sections 200 Through 225 and 400 Through 461	4/5/00
		6/30/95
		5/1/95
		5/1/94
106.	Abbreviations	5/1/94
107.	Incorporations by Reference (Except subsection 03.)	7/1/97
		5/1/94
121.	Compliance Requirements by Department	5/1/94
122.	Information Orders by the Department	4/5/00
		5/1/94
123.	Certification of Documents	5/1/94
124.	Truth, Accuracy and Completeness of Documents	5/1/94
125.	False Statements	3/23/98
126.	Tampering	3/23/98
127.	Format of Responses	5/1/94
130.	Startup, Shutdown, Scheduled Maintenance, Safety Measures, Upset and Breakdown	4/5/00
131.	Excess Emissions	4/5/00
132.	Correction of Condition	4/5/00
133.	Startup, Shutdown and Scheduled Maintenance Requirements	4/5/00
		3/20/97
134.	Upset, Breakdown, and Safety Requirements	4/5/00
		3/20/97
135.	Excess Emission Reports	4/5/00
		3/20/97
136.	Excess Emission Records	4/5/00
		3/23/98
		3/20/97
155.	Circumvention	4/5/00
156.	Total Compliance	5/1/94
157.	Test Methods and Procedures	4/5/00
160.	Provisions Governing Specific Activities and Conditions	4/5/00
162.	Modifying Physical Conditions	5/1/94
163.	Source Density	5/1/94
164.	Polychlorinated Biphenyls (PCBs)	5/1/94
200.	Procedures and Requirements for Permits to Construct	4/5/00
201.	Permit to Construct Required	3/30/01
202.	Application Procedures	4/5/00
		5/1/94
203.	Permit Requirements for New and Modified Stationary Sources (Except subsection 203.03)	5/1/94
204.	Permit Requirements for New Major Facilities or Major Modifications in Nonattainment Areas	3/30/01
		4/5/00
		5/1/94
205.	Permit Requirements for New Major Facilities or Major Modifications in Attainment or Unclassifiable Areas.	4/5/00
		5/1/94
206.	Optional Offsets for Permits to Construct	6/30/95
207.	Requirements for Emission Reduction Credit	5/1/94
208.	Demonstration of Net Air Quality Benefit	4/5/00
		5/1/94

Citation	Title	State effective date
209.	Procedures for Issuing Permits	4/5/00
		3/19/99
		3/23/98
		5/1/94
211.	Conditions for Permits to Construct	5/1/94
212.	Obligation to Comply	5/1/94
213.	Pre-permit Construction	4/5/00
		3/23/98
220.	General Exemption Criteria for Permit to Construct Exemptions	4/5/00
221.	Category I Exemption	4/5/00
222.	Category II Exemption (Except subsection 222.03.)	4/5/00
		7/1/97
		5/1/94
400.	Procedures and Requirements for Tier II Operating Permits	5/1/94
401.	Tier II Operating Permit (Except subsections 401.01.a and 401.04)	4/5/00
		3/19/99
		5/1/94
402.	Application Procedures	4/5/00
		5/1/94
403.	Permit Requirements for Tier II Sources	5/1/94
404.	Procedures for Issuing Permits	4/5/00
		5/1/94
405.	Conditions for Tier II Operating Permits	5/1/94
406.	Obligation to Comply	5/1/94
460.	Requirements for Emission Reduction Credit	4/5/00
		5/1/94
461.	Requirements for Banking Emission Reduction Credits (ERC's)	4/5/00
		5/1/94
470.	Permit Application Fees for Tier II Permits	3/7/95
500.	Registration Procedures and Requirements for Portable Equipment	5/1/94
510.	Stack Heights and Dispersion Techniques	5/1/94
511.	Applicability	4/5/00
512.	Definitions	4/5/00
		5/1/94
513.	Requirements	4/5/00
514.	Opportunity for Public Hearing	5/1/94
515.	Approval of Field Studies and Fluid Models	5/1/94
516.	No Restriction on Actual Stack Height	5/1/94
550.	Air Pollution Emergency Rule	5/1/94
551.	Episode Criteria	5/1/94
552.	Stages	3/15/02
		5/1/94
553.	Effect of Stages	3/15/02
556.	Criteria for Defining Levels Within Stages	3/15/02
		4/5/00
557.	Public Notification	5/1/94
558.	Information to Be Given	3/15/02
		5/1/94
559.	Manner and Frequency of Notification	5/1/94
560.	Notification to Sources	4/5/00
561.	General Rules	3/15/02
		4/5/00
		5/1/94
562.	Specific Emergency Episode Abatement Plans for Point Sources	5/1/94
563.	Transportation Conformity	3/30/01
564.	Incorporation by Reference	3/30/01
565.	Abbreviations	3/30/01
566.	Definitions for the Purpose of Sections 563 Through 574 and 582	3/30/01
567.	Agencies Affected by Consultation	3/30/01
568.	ICC Member Roles in Consultation	3/30/01
569.	ICC Member Responsibilities in Consultation	3/30/01
570.	General Consultation Process	3/30/01
571.	Consultation Procedures	3/30/01
572.	Final Conformity Determinations by USDOT	3/30/01
573.	Resolving Conflicts	3/30/01
574.	Public Consultation Procedures	3/30/01
575.	Air Quality Standards and Area Classification	4/5/00
576.	General Provisions for Ambient Air Quality Standards	5/1/94
577.	Ambient Air Quality Standards for Specific Air Pollutants (Except subsection 577.06)	5/1/94
578.	Designation of Attainment, Unclassifiable, and Nonattainment Areas	5/1/94
579.	Baselines for Prevention of Significant Deterioration	4/5/00
		5/1/94

Citation	Title	State effective date
580.	Classification of Prevention of Significant Deterioration Areas	4/5/00
		5/1/94
581.	Prevention of Significant Deterioration (PSD) Increments	4/5/00
		7/1/97
		5/1/94
582.	Interim Conformity Provisions for Northern Ada County Former Nonattainment Area for PM–10	3/30/01
600.	Rules for Control of Open Burning	3/19/99
601.	Fire Permits, Hazardous Materials and Liability	5/1/94
602.	Nonpreemption of Other Jurisdictions	5/1/94
603.	General Restrictions	5/1/94
604.	Alternatives to Open Burning	5/1/94
606.	Categories of Allowable Burning	5/1/94
607.	Recreational and Warming Fires	5/1/94
608.	Weed Control Fires	5/1/94
609.	Training Fires	5/1/94
610.	Industrial Flares	5/1/94
611.	Residential Solid Waste Disposal Fires	5/1/94
612.	Landfill Disposal Site Fires	3/19/99
613.	Orchard Fires	4/5/00
		5/1/94
614.	Prescribed Burning	5/1/94
615.	Dangerous Material Fires	5/1/94
616.	Infectious Waste Burning	5/1/94
625.	Visible Emissions	4/5/00
		5/1/94
626.	General Restrictions on Visible Emissions from Wigwam Burners	4/5/00
650.	Rules for Control of Fugitive Dust	5/1/94
651.	General Rules	5/1/94
675.	Fuel Burning Equipment—Particulate Matter	4/5/00
676.	Standards for New Sources	5/1/94
677.	Standards for Minor and Existing Sources	5/1/94
678.	Combinations of Fuels	5/1/94
679.	Averaging Period	4/5/00
		5/1/94
680.	Altitude Correction	5/1/94
681.	Test Methods and Procedures	4/5/00
700.	Particulate Matter—Process Weight Limitations	4/5/00
701.	Particulate Matter—New Equipment Process Weight Limitations	4/5/00
702.	Particulate Matter—Existing Equipment Process Weight Limitations	4/5/00
		5/1/94
703.	Particulate Matter—Other Processes	4/5/00
725.	Rules for Sulfur Content of Fuels	4/5/00
726.	Definitions as Used in Sections 727 Through 729	5/1/94
727.	Residual Fuel Oils	5/1/94
728.	Distillate Fuel Oil	5/1/94
729.	Coal	5/1/94
785.	Rules for Control of Incinerators	5/1/94
786.	Emission Limits	4/5/00
787.	Exceptions	3/23/98
805.	Rules for Control of Hot-mix Asphalt Plants	5/1/94
806.	Emission Limits	5/1/94
807.	Multiple Stacks	5/1/94
808.	Fugitive Dust Control	5/1/94
815.	Rules for Control of Kraft Pulping Mills	5/1/94
816.	Statement of Policy	5/1/94
817.	General Rules	5/1/94
821.	Recovery Furnace Particulate Standards	5/1/94
822.	Lime Kiln Standards	5/1/94
823.	Smelt Tank Standards	5/1/94
824.	Monitoring and Reporting (Except subsection 824.01)	4/5/00
		5/1/94
825.	Special Studies	5/1/94
826.	Exceptions	5/1/94
845.	Rules for Control of Sulfur Oxide Emissions from Sulfuric Acid Plants	5/1/94
846.	Emission Limits	4/5/00
847.	Monitoring and Testing	4/5/00
848.	Compliance Schedule	5/1/94

[68 FR 2222, Jan. 16, 2003]

§ 52.680 [Reserved]

§ 52.681 Permits to construct and tier II operating permits.

(a) Except as otherwise provided in pargraph (b) of this section, emission limitations and other provisions contained in Permits to Construct and Tier II Operating Permits issued by the Idaho Department of Environmental Quality in accordance with the Federally-approved State of Idaho Rules for Control of Air Pollution in Idaho, incorporated by reference in section 52.670 (IDAPA 58.01.01.200 through 222, IDAPA 58.01.01.400 through 406), shall be applicable requirements of the Federally-approved Idaho SIP (in addition to any other provisions) for the purposes of section 113 of the Clean Air Act and shall be enforceable by EPA and by any person in the same manner as other requirements of the SIP.

(b) Operating Permits authorizing the use of alternative emission limits (bubbles) under IDAPA 58.01.01.401.01.a, 58.01.01.440, and 58.01.01.441 (including the use of banked emission reduction credits in a bubble pursuant to IDAPA 58.01.01.461), and Tier II Operating Permits authorizing compliance schedule extensions under IDAPA 58.01.01.401.04 must be submitted to EPA for approval as revisions to the Idaho SIP before they become applicable requirements of the Idaho SIP.

[68 FR 2225, Jan. 16, 2003]

§ 52.682 [Reserved]

§ 52.683 Significant deterioration of air quality.

(a) The State of Idaho Rules for Control of Air Pollution in Idaho, specifically, IDAPA 58.01.01.005 through 007 (definitions), IDAPA 58.01.01.200 through 222 (permit to construct rules), IDAPA 58.01.01.510 through 516 (stack height rules), and IDAPA 58.01.01.575 through 581 (standards, increments and area designations) are approved as meeting the requirements of title I, part C, subpart 1 of the Clean Air Act for preventing significant deterioration of air quality.

(b) The requirements of sections 160 through 165 of the Clean Air Act are not met for Indian reservations since the plan does not include approvable procedures for preventing significant deterioration of air quality on Indian reservations. Therefore, the provisions of § 52.21 except paragraph (a)(1) are hereby incorporated and made part of the applicable plan for Indian reservations in the State of Idaho.

(c) The requirements of section 165 of the Clean Air Act are not met for sources subject to prevention of significant deterioration requirements prior to August 22, 1986, the effective date of EPA's approval of the rules cited in paragraph (a) of this section. Therefore, the provisions of § 52.21 except paragraph (a)(1) are hereby incorporated and made part of the applicable plan for sources subject to § 52.21 prior to August 22, 1986.

[68 FR 2226, Jan. 16, 2003, as amended at 68 FR 20072, Apr. 24, 2003; 68 FR 74489, Dec. 24, 2003]

§ 52.684–52.689 [Reserved]

§ 52.690 Visibility protection.

(a) The requirements of section 169A of the Clean Air Act are not met, because the plan does not include approvable procedures for protection of visibility in mandatory Class I Federal areas.

(b) Regulation for visibility monitoring. The provisions of § 52.26 are hereby incorporated and made a part of the applicable plan for the State of Idaho.

(c) *Long-term strategy*. The provisions of § 52.29 are hereby incorporated and made part of the applicable plan for the State of Idaho.

[50 FR 28553, July 12, 1985; 51 FR 23759, July 1, 1986, as amended at 52 FR 45137, Nov. 24, 1987]

§ 52.691 Extensions.

(a) The Administrator, by authority delegated under section 188(d) of the Clean Air Act, as amended in 1990, hereby extends for one year (until December 31, 1995) the attainment date for the Power-Bannock Counties PM–10 nonattainment area and the Sandpoint PM–10 nonattainment area.

(b) The Administrator, by authority delegated under section 188(d) of the Clean Air Act, as amended in 1990,

hereby grants a second one-year extension (until December 31, 1996) to the attainment date for the Power-Bannock Counties PM–10 nonattainment area.

[61 FR 20732, May 8, 1996, as amended at 61 FR 66606, Dec. 18, 1996]

Subpart O—Illinois

§ 52.719 [Reserved]

§ 52.720 Identification of plan.

(a) Title of plan: "State of Illinois Air Pollution Implementation Plan."

(b) The plan was officially submitted on January 31, 1972.

(c) The plan revision listed below were submitted on the dates specified.

(1) The role of the City of Chicago as a local agent was defined in a letter from the State Environmental Protection Agency on March 13, 1972.

(2) Copies of the Illinois Pollution Control Board Regulations, Chapter 2, Parts I, II and III were submitted May 4, 1972, by the Governor.

(3) A document describing the role of the Chicago Department of Environmental Control was submitted July 28, 1972, by the State Environmental Protection Agency.

(4) Copies of the revisions to the State air episode regulations were submitted on August 29, 1972, by the Governor.

(5) Compliance schedules submitted on March 13, 1973, by the Pollution Control Board.

(6) Compliance schedules submitted on April 3, 1973, by the Pollution Control Board.

(7) Transportation control plan submitted on April 17, 1973, by the Pollution Control Board.

(8) Compliance schedules submitted on May 3, 1973, by the Pollution Control Board.

(9) Compliance schedules submitted on June 15, 1973, by the Pollution Control Board.

(10) Compliance schedules submitted on August 7, 1973, by the Pollution Control Board.

(11) Information concerning the coal ban in the Chicago area was submitted on October 22, 1973, by Governor Walker.

(12) On July 22, 1976, the Director of the Illinois Environmental Protection Agency submitted revised emergency episode regulations.

(13) On November 29, 1977, the Director of the Illinois Environmental Protection Agency submitted grain handling and drying emission limitations as revisions to Rule 203.

(14) Revision consisting of an Illinois Pollution Control Board Order issued on July 20, 1978 to Commonwealth Edison Company, Christian County, Illinois and submitted on August 14, 1978 by the Illinois Environmental Protection Agency.

(15) Revision consisting of an Illinois Pollution Control Board Order issued to Shell Oil Company's Wood River refinery on December 14, 1978 by the Illinois Environmental Protection Agency.

(16) On April 4, 1979, the State submitted its draft nonattainment area plan for all areas designated nonattainment as of March 3, 1978 and as revised on October 5, 1978. This submittal contained a request for extensions of the statutory attainment deadline for CO and 03. The submittal also included a vehicle emission inspection and maintenance program and a new source review plan. Although the State submittal also included the following provisions, U.S. EPA is taking no action to include them in the federally approved SIP at this time: the portions of Rules 101, 103 and 105 relating to the provisions addressing malfunctions, general requirements of the Clean Air Act which are not Part D requirements, and the provisions covering open burning, mobile source emission standards, diesel locomotive emission standards, sulfur dioxide emissions for certain fuel combustion sources located outside major metropolitan areas, compliance dates for organic emission limitations, particulate emissions from low carbon waste incinerators, and adoption of Federal New Source Performance Standards. In addition, U.S. EPA is not rulemaking at this time on those portions of the following rules which contain specified changes made between the publication of the notice of proposed rulemaking and the final rulemaking action:

(i)—(iii) [Reserved]

(iv) The new materials in Section 4.11 of the Rules for Issuance of Permits to New or Modified Air Pollution Sources;

(v) The addition of a definition of "reconstruction" in Section 4.7 of the Rules for Issuance of Permits;

(vi) The procedure allowing external offsets contained in Section 10 of the Rules for Issuance of Permits.

(17) On August 29, 1979, the State submitted additional information and clarification for the nonattainment area plan in response to USEPA's July 2, 1979 notice of proposed rulemaking.

(18) On September 20, 1979, the State submitted a summary of public hearing comments on the plan.

(19) On October 30, 1979, the State submitted copies of Illinois Pollution Control Board final orders for control of VOC emissions from stationary sources (Rule 205), sources of fugitive particulate (Rule 203(f)), and particulate emissions from iron and steel sources (Rule 203(d)).

(20) On December 20, 1979, the State submitted a letter containing the dates that most of the regulatory and nonregulatory portions of the nonattainment area plans were finally adopted by the Illinois Pollution Control Board. Rule 205 containing RACT controls for stationary sources of VOC was effective in the State on July 18, 1979. Rule 203(f) governing fugitive dust emissions was effective in the State on September 18, 1979.

(21) On January 25, 1980, the State submitted a copy of finally enacted "Rules for the Issuance of Permits to New or Modified Air Pollution Sources Affecting Nonattainment Areas." Sections 5.1(a)(2)(ii) and 5.1(a)(2)(iii) of these rules were reserved by the State. The effective date of these Rules was January 16, 1980.

(22) On March 21, 1979, the State of Illinois submitted to the USEPA revised regulations for control of sulfur dioxide emissions. On September 19, 1979, the State submitted additional information on these revised regulations to the USEPA.

(23) On January 17, 1980 and on February 7, 1980 the State submitted further information and clarifications to Rule 204.

(24) On September 19, 1979, the State of Illinois submitted a revision to Rule 204(e)(1) for the Commonwealth Edison Company. The revision approves an emission limitation of 105,162 lbs SO_2/hour for the Kincaid Generating Station in Christian County, Illinois.

(25) On April 30, 1980, the State submitted revisions to the transportation control plan for northeast Illinois (Chicago).

(26) On December 20, 1979, the State of Illinois submitted a revision to provide for modification of the existing air quality surveillance network.

(27) On January 8, 1980, the State submitted an Opinion and Final Order of the Pollution Control Board (dated November 19, 1979) which deletes Rule 206(d) of Chapter 2 from the Illinois Air Pollution Control Regulations.

(28) On September 18, 1979, the State submitted a Final Order of the Pollution Control Board (dated April 12, 1979) which amended Rule 205(g)(1) of Chapter 2 of the Illinois Air Pollution Control Regulations.

(29) On July 21, 1981, the State submitted Volume 9 Lead, of the Illinois State Implementation Plan for Air Pollution Control for incorporation in the Illinois State Implementation Plan. This plan covers all areas in Illinois except for Granite City in the St. Louis Interstate AQCR.

(30) On July 29, 1980, the State submitted a May 29, 1980, Opinion and Order of the Illinois Pollution Control Board granting a variance from the requirements Rule 203(d)(8)(B) of Chapter 2 of the Air Pollution Control Regulations to Continental Grain Company's grain elevator located in Crossville, White County, Illinois. This variance expired July 1, 1980.

(31) On April 4, 1980, the State submitted a November 29, 1979, Opinion and Order of the Illinois Pollution Control Board (IPCB) and Supplementary IPCB Orders dated January 24, 1980, and February 7, 1980. These Orders grant 13 Caterpillar Tractor Company boilers a variance from the requirements of IPCB (A), Rule 203(g)(1)(C)(i) and/or Rule 203(g)(1)(D) which regulate particulate emissions from new and existing sources. No action is taken at this time on variance provisions for Mapleton facility boilers #2, 3, 4, and 5. This variance expired on October 8, 1981.

(32) On August 31, 1981, the State of Illinois submitted a revision to the Illinois State Implementation Plan in the form of a July 9, 1981, Order of the Illinois Pollution Control Board (R–77–15). This Order creates Rule 204(c)(1)(E) which establishes sulfur dioxide (SO_2) emission limitations of 5.5 lbs/SO/MMBTU for solid fuel combustion sources having actual heat input not greater than 250 million BTU's per hour owned or operated by Bemis Company, Inc., Celotex Corporation or Sherex Corporation. On November 17, 1981, the State submitted additional information in support of this revision.

(33) On August 20, 1980, and March 20, 1981, the State submitted additional information on the transportation control plans for the Northeast Illinois (Chicago) Area.

(34) On October 15, 1980, the State submitted additional information on the transportation control plans for the Peoria Metropolitan Area.

(35) On April 1, 1981, the State submitted additional information on the transportation control plans for the St. Louis Metropolitan (Illinois) Area.

(36) On December 10, 1980, the State submitted a July 24, 1980, Opinion and Order of the Illinois Pollution Control Board and a September 18, 1980, Order of the Board granting Bunge Corporation's Cairo, Illinois soybean processing plant and grain elevator variance from Illinois Pollution Control Board's particulate emission standards under Rules 203(g)(1)(D) and 103(b)(1) of Chapter 2 of the Air Pollution Control Regulations through October 15, 1981.

(37) On July 17, 1980, the State submitted an April 3, 1980, Opinion and Order of the Illinois Pollution Control Board adopting a December 13, 1979, Proposed Opinion and Order of the Board which exempted certain small explosive waste incinerators from the requirements of Rule 203(e) Particulate Emission Standards and Limitations for incinerators and Rule 206(b) Carbon Monoxide Emissions Standards and Limitations for incinerators.

(38) On May 10, 1982, the State submitted a February 4, 1982, Illinois Pollution Control Board Opinion and Order (PCB 81–184) granting a variance from the requirements of Rules 205(m)(1)(B) and 204(n)(1)(G) of Chapter 2 of the Air Pollution Control Regulations to the Lyon Metal Products, Incorporated, Montgomery, Illinois facility. This variance expires on May 31, 1985.

(39) On October 1, 1981, the State submitted a report in satisfaction of the Total Suspended Particulate Control Strategy approval condition in which the State agreed to conduct an analysis of the potential air quality impact from storage piles with uncontrolled emissions of less than 50 tons per year, to submit the results of any analysis to EPA, to submit any necessary regulations to the Illinois Pollution Control Board, and promulgate and submit any necessary regulations to EPA. This report concluded that no further regulations were needed.

(40) EPA Study Volatile Organic Compound Emissions from Solvent Cleaning Operations in the State of Illinois (EPA 905/4–80–008) was prepared to satisfy the Ozone Control Strategy approval condition in which the State agreed to conduct a study to demonstrate that the three pound per hour, 15 pound per day exemption for solvent metal cleaners contained in Rule 205(k) represents RACT, to submit the results of the study to EPA, to submit the necessary regulations to the Illinois Pollution Control Board and promulgate and submit any necessary regulations to EPA. The State reviewed this report and in a February 11, 1981, letter to EPA noted their agreement with the findings of the report and indicated that because there was no need for further regulations, this condition is satisfied.

(41) On December 7, 1981, the State submitted a October 8, 1981, Illinois Pollution Control Board Final Order (R79–11). This Final Order amends Rule 203(g)(1) by adding subsection (E).

(42) On January 4, 1983, the State submitted a revision to the Illinois State Implementation Plan in the form of an October 27, 1982, Illinois Pollution Control Board (IPCB) Opinion and Order (PCB 82–88). This Opinion and Order grants a variance from the requirements of Rule 203(a) of Chapter 2 of the Air Pollution Control Regulations to a proposed fluidized bed combustion boiler at B.F. Goodrich's Henry County, Illinois facility. This variance continues

until October 1, 1987, or until the facility is no longer subject to Rule 206(a), whichever comes first.

(43) On July 29, 1982, the State submitted a revision to the Illinois State Implementation Plan in the form of a May 28, 1981, Illinois Pollution Control Board (IPCB) Final Opinion of the Board (R78–17). This Final Opinion deletes Rule 204(c)(1)(D) and the reference to it in Rule 204(h) from the IPCB Air Pollution Control Regulations.

(44) On March 17, 1983, the Illinois Environmental Protection Agency (IEPA) submitted a revision to its ozone SIP for Chrysler's Belvidere facility. The revision request contains an alternative compliance time schedule with interim emission limitations which is in the form of a variance for prime coating and prime surface coating operations. Final compliance is changed from December 31, 1982 to December 31, 1987.

(45) On August 19, 1983, the State of Illinois submitted a revision to the Illinois State Implementation Plan in the form of a July 26, 1983, Order of the Illinois Pollution Control Board (R82–12). This Order creates Rule 313 which establishes 1.5 micrograms per cubic meter, maximum arithmetic mean, averaged over a calendar quarter as the State's ambient air quality standard for lead. The Board also adopted, as part of Rule 313, a measurement method for determining compliance with the standard.

(46) On August 15, 1983, the Illinois Environmental Protection Agency submitted a May 19, 1983, Opinion and Order (PCB–82–147) of the Illinois Pollution Control Board (IPCB) granting Del Monte Corporation's Can Manufacturing Plant No. 115 located in Rochelle, Ogle County, Illinois, a variance from the IPCB volatile organic compound emission standards under Rule 205(n)(1)(B)(i) and Rule 205(n)(1)(B)(vi) of Chapter 2: Air Pollution Regulations. The variance expires on December 31, 1984.

(47) On March 24, 1983, and May 3, 1983, the State submitted information that indicated that a February 21, 1980 (45 FR 11472), conditional approval of the incorporation of a revised Part D sulfur dioxide control strategy into the Illinois State Implementation Plan has been satisfied for Cincinnati, Pekin and Elm Grove Townships in Tazewell County and for Logan and Limestone Townships in Peoria County. This approval condition required that the SIP include a reanalysis of the Pekin, Illinois area; a submittal of the analysis results to USEPA; the proposal of any necessary regulations to the Illinois Pollution Control Board necessary to insure attainment and maintenance of the sulfur dioxide standard; and the promulgation of any necessary regulations. Any promulgated regulations must be submitted to USEPA.

(48)–(49) [Reserved]

(50) On May 3, 1983, the State requested that USEPA incorporate IPCB Rule 204 (f)(2) into the Illinois SIP. Rule 204(f)(2) was adopted by Illinois as part of a February 24, 1983, Order of the Board (R80–22). USEPA approves the incorporation of Rule 204(f)(2) as it pertains to Pekin Energy, a source in the Peoria major metropolitan area.

(51) On January 30, 1984, the State submitted Rule 204(f) as contained in a February 24, 1983, Order of the IPCB (R80–22) as it applies to sources in the Peoria Major Metropolitan area for incorporation in the SIP. USEPA approves the incorporation of Rule 204(f) into the SIP as it applies to all sources in Peoria and Tazewell Counties except Caterpillar Tractor Mapleton and East Peoria Plants. No action is taken on Rule 204(f) as it applies to the Chicago or St. Louis (Illinois—portion) Major Metropolitan Areas or on Rule 204(f) (1) and (2).

(52) [Reserved]

(53) On September 30, 1983, the State submitted a revision to the Illinois State Implementation Plan in the form of a lead plan to assure attainment and maintenance of the NAAQS in the Granite City area. The Illinois plan includes a discussion of air quality data measured since 1978, an emission inventory of three source categories capable of emitting lead, atmospheric modeling analyses and proposed necessary control strategies. On March 19, 1984, the State submitted five consent decrees entered by the State of Illinois with the Circuit Court for the Third Judicial Circuit of Madison County and filed March 16, 1984, for incorporation in the lead plan. These include *People of the*

State of Illinois vs. *Taracorp, Inc.; People of the State of Illinois* vs. *St. Louis Lead Recyclers; People of the State of Illinois* vs. *First Granite City National Bank; People of the State of Illinois,* vs. *Stackorp Inc.;* and *People of the State of Illinois* vs. *B.V. and G.V. Transport Company.*

(54) [Reserved]

(55) On November 14, 1985, the State of Illinois submitted a negative declaration for natural gas/gasoline processing plants.

(i) Incorporation by reference.

(A) Letter dated November 14, 1985, from Michael J. Hayes, Manager, Division of Air Pollution Control, Illinois Environmental Protection Agency.

(56) On June 19, 1984, the State submitted Illinois Environmental Protection Agency Rule 252 entitled, "Rules for Governing Public Participation in the Air Pollution Permit Program for Major Source in Nonattainment Areas."

(i) Incorporation by reference.

(A) Illinois Environmental Protection Agency Rule 252 entitled, "Rule for Governing Public Participation in the Air Pollution Permit Program for Major Sources in Nonattainment Areas," published on June 8, 1984.

(57)–(60) [Reserved]

(61) On March 15, 1984 and June 14, 1984 the Illinois Environmental Protection Agency submitted commitments for satisfying several outstanding conditions to the sulfur dioxide [52.724(a)(1)] State Implementation Plan.

(62) On January 16, 1985, the Illinois Environmental Protection Agency submitted a variance from Illinois Rule 206(a).

(i) Incorporation by reference.

(A) June 14, 1984, Opinion and Order of the Illinois Pollution Control Board (IPCB), PCB 84–19. This is a variance from Illinois Rule 206(a) until June 14, 1987, for CO emissions from a fluidized bed combustion boiler at Midwest Solvents Company's facility in Tazewell County, Illinois.

(63) On February 6, 1985, the Illinois Environmental Protection Agency (IEPA) submitted a site-specific revision to its total suspended particulates State Implementation Plan for Villa Grove's "Dump and Boot Pit" emissions in Champaign County, Illinois.

(i) Incorporation by reference.

(A) Illinois Pollution Control Board, Opinion and Order of the Board, PCB 84–53, Villa Grove's "Dump and Boot Pit" site-specific TSP revision. This revision extends the compliance date for control requirements on these emissions until September 1, 1987, and was adopted on July 14, 1984.

(64) On May 13, 1985, the Illinois Environmental Protection Agency (IEPA) submitted a variance from Illinois Rule 202(b) for a Brule pathological waste incinerator (BPWI) at NPWC's facility located at the Great Lakes Naval Base, Great Lakes, Shields Township, Illinois, as a revision to its TSP SIP. Shields Township is an attainment area for both the primary and secondary national ambient air quality standards (NAAQS) for TSP.

(i) Incorporation by reference.

(A) Opinion and Order of the Illinois Pollution Control Board 84–156 adopted on March 22, 1985.

(65) Submitted from the Illinois Environmental Protection Agency (IEPA) dated July 22, 1985, requesting an extended compliance schedule for Precision Coatings Incorporated (PCI) coating Machine Number 2.

(i) Incorporation by reference.

(A) Illinois Pollution Control Board Opinion and Order of the Board, PCB 84–117, which was adopted on February 20, 1985, and a modification to PCB 84–117 which was adopted on April 14, 1985.

(66) On March 27, 1985, the Illinois Environmental Protection Agency (IEPA) submitted a site-specific revision to its Carbon Monoxide State Implementation Plan for Anderson Clayton Foods, Inc. (ACF), a variance from 35 Illinois Administrative Code (IAC) 216.121 which governs Carbon Monoxide emissions from the Fluidized Bed Combuster retrofitted boiler at ACF's Jacksonville, Illinois facility. IAC 216.121 was incorporated in the Illinois SIP on May 31, 1972 (37 FR 10862), as Illinois Pollution Control Board Rule 206(a).

(i) Incorporation by reference.

(A) Illinois Pollution Control Board Opinion and Order of the Board, PCB 84–147, which was adopted on January 24, 1985.

(67) On April 18, 1983, the State of Illinois submitted a 0.60 lb TSP/MMBTU emission limit for the City of Rochelle Municipal Steam Power Plant. On May 24, 1985, it submitted a revised modeling analysis.

(i) Incorporation by reference.

Illinois Pollution Control Board Order (R78–15), Rule 203(g)(1)(C)(iii) which is dated February 24, 1983.

(68) On May 8, 1985, the Illinois Environmental Protection Agency submitted a variance until December 31, 1987, from Illinois Rule 205(n)(1)(b)(v) and Rule 205(n)(1)(b)(vi), for American Can Corporation's Hoopeston, Illinois facility in the form of a January 24, 1985, Opinion and Order of the Illinois Pollution Control Board (PCB 84–106).

(i) Incorporation by reference. (A) A January 24, 1985, Opinion and Order of the Illinois Pollution Control Board (ICPB), PCB 84–106. This is a variance until December 31, 1987, for the coating reformulation programs at American Can Corporation's Hoopeston facility located in Hoopeston, Illinois.

(69) On January 28, 1983, the Illinois Environmental Protection Agency submitted a December 30, 1982, Illinois Pollution Control Board Order (R80–5). Illinois Pollution Control Board Rules 205(l) (4) through (10), 205(t) and 205(u) are approved.

(i) Incorporation by reference. (A) Ilinois Pollution Control Board Rules 205(l)(4) through (10), 205(t) and 205(u) as contained in December 30, 1982, Illinois Pollution Control Board Order R80–5.

(ii) Additional material—none.

(70) On February 13, 1986, the Illinois Environmental Protection Agency (IEPA) submitted a revision to its ozone SIP for the Fedders-USA's facility located in Effingham, Effingham County, Illinois. It grants Fedders-USA a compliance date extension for control requirements from October 1, 1982, to April 1, 1986, and provides for a legally enforceable compliance program.

(i) Incorporation by reference.

(A) A January 9, 1986, Opinion and Order of the Illinois Pollution Control Board (IPCB), PCB 83–47.

(71) On October 20, 1983, the Illinois Environmental Protection Agency submitted a site-specific revision to Illinois' sulfur dioxide plan for Illinois Power Company's Baldwin Power Station. The revised SO_2 emission limitations are 101,966 lbs/hour, in the aggregate, and 6 lbs/MMBTU.

(i) Incorporation by reference. (A) Emission limits within Paragraph 1 of Illinois Pollution Control Board Final Order PCB 79–7, which was adopted September 8, 1983.

(72) [Reserved]

(73) On May 6, 1985, the Illinois Environmental Protection Agency, requested an extended compliance schedule for National Can Corporation's Rockford facility.

(i) Incorporation by reference.

(A) Illinois Pollution Control Board, April 1, 1982, Opinion and Order of the Board, PCB 81–189 and a January 24, 1985, Opinion and Order PCB 84–108. These orders grant National Can Corporation (Rockford Plant) a variance from the existing VOC SIP requirements from December 31, 1982, until December 31, 1983, and from December 31, 1983, until December 31, 1985, respectively.

(74) On October 30, 1986, the Illinois Environmental Protection Agency submitted a September 25, 1986, Final Order of the Illinois Pollution Control Board R85–33 revises the State's coke oven pushing and charging rules and recodifies some related rules.

(i) Incorporation by reference. (A) Order of the Illinois Pollution Control Board R85–33, which was adopted September 25, 1986.

(75)–(77) [Reserved]

(78) On January 28, 1983, June 25, 1987, August 21, 1987, September 28, 1987, October 2, 1987, December 22, 1987, January 8, 1988, March 29, 1988, and May 2, 1988 the State submitted stationary source control measures for incorporation in the ozone plan.

(i) Incorporation by reference. (A) The following sections of title 35, Environmental Protection; subtitle B: Air Pollution; Chapter 1: Pollution Control Board of the Illinois Administrative Code, (June 1989): section 211.122 (definitions of bead-dipping; component; dry cleaning facility; external floating roof; gas service; green tire spraying; green tires; heavy liquid; liquid mounted seal; liquid service; pneumatic rubber tire manufacture; refinery unit,

process unit, or unit; tread end cementing; undertread cementing; valves not externally regulated; vapor collection system; vapor mounted primary seal; volatile organic liquid; and volatile organic material) of subpart B (part 211); section 215.104 (definitions of continuous process; in vacuum service; material recovery section; open-ended valve; polystyrene plant; polystyrene resin; repaired; styrene devolatilizer unit; and styrene recovery unit) of subpart A (part 215); sections 215.124, 215.125, and 215.126 of subpart B (part 215); section 215.205 of subpart F (part 215); sections 215.240, 215.241, and 215.249 of subpart H (part 215); section 215.408 of subpart P (part 215); sections 215.420 through 215.431, 215.433, 215.434, 215.435, 215.437, and 215.438, all of subpart Q (part 215); section 215.453 of subpart R (part 215); sections 215.465 and 215.466 of subpart S (part 215); sections 215.520, 215.521, 215.525, 215.526, and 215.527 all of subpart V (part 215); sections 215.582, 215,583, and 215.584 of subpart Y (part 215); sections 215.607 through 215.613 of subpart Z (part 215); and sectons 215.875, 215.877, 215.879, 215.881, 215.883, and 215.886 all of subpart BB (part 215) are approved.

(ii) Additional material.

(79) On March 20, 1986, November 17, 1986, and July 1, 1987, Illinois submitted its vehicle inspection and maintenance plan for the Chicago and East St. Louis areas.

(i) *Incorporation by reference.* (A) Title 35: Environmental Protection, Subtitle B: Air Pollution, Chapter II: Environmental Protection Agency, Part 276, Procedures To Be Followed in the Performance of Annual Inspections of Motor Vehicle Exhaust Emissions, Adopted at 10 Illinois Register 13954, effective August 13, 1986.

(ii) *Additional material.* (A) "Technical Procedures Memorandum—Enforcement" between the Illinois Secretary of State and the Illinois Environmental Protection Agency, as submitted by Michael J. Hayes, Manager, Division of Air Pollution Control on July 1, 1987.

(80) [Reserved]

(81) On April 6, 1990, and May 4, 1990, Illinois submitted a regulation which reduced the maximum allowable volatility for gasoline sold in Illinois during July and August 1990 to 9.5 pounds per square inch.

(i) Incorporation by reference

(A) Title 35: Environmental protection, Subtitle B: Air pollution, Chapter I: Pollution control board, Part 215, Organic material emission standards and limitations, §215.585, Gasoline volatility standards, Adopted at 14 Illinois register *6434*, effective April 11, 1990.

(82)–(83) [Reserved]

(84) On September 18, 1991, and November 18, 1991, the State submitted documents intended to satisfy federal requirements for an operating permit program which can issue federally enforceable operating permits.

(i) Incorporation in Reference.

(A) Public Act 87–555, an Act to amend the Environmental Protection Act by changing section 9.1, effective September 17, 1991. (Ch. 111 1/2, par. 1009.1) par. 1009.1(a), (b), (c), (d) and (f).

(85) On March 24, 1988, the State submitted rules for issuance of construction permits to new and modified air pollution sources located in or affecting nonattainment areas (New Source Review rules).

(i) Incorporation by reference.

(A) Illinois Administrative Code, Title 35 Environmental Protection, Subtitle B: Air Pollution, Chapter 1: Pollution Control Board, Part 203: Major Stationary Sources.

(86) On February 8, 1991, the State submitted revisions to its sulfur dioxide measurement methodology.

(i) *Incorporation by reference.* (A) Title 35: Environmental Protection, Subtitle B: Air Pollution, Chapter 1: Pollution Control Board, Part 214 Sulfur Limitations, Subpart A: General Provisions, section 214.101 Measurement Methods. Adopted December 20, 1990, effective January 15, 1991.

(87) On March 13, 1985, the State submitted revisions to its sulfur dioxide limitations.

(i) Incorporation by reference.

(A) Title 35: Environmental Protection, Subtitle B: Air Pollution, Chapter 1: Pollution Control Board, Part 214 Sulfur Limitations, Subpart C: Existing Solid Fuel Combustion Emission Sources, Section 214.141 Sources Located in Metropolitan Areas, through paragraph (a) only, effective March 28, 1983; Subpart F: Alternative Standards for Sources Inside Metropolitan Areas, Section 214.201 Alternative Standards

for Sources in Metropolitan Areas and Section 214.202 Dispersion Enhancement Techniques, effective March 28, 1983.

(88) On June 9, 1986, the State submitted revisions to its sulfur dioxide limitations in the form of a April 24, 1986, opinion and order of the Illinois Pollution Board in proceeding R84–28.

(i) Incorporation by reference.

(A) Title 35: Environmental Protection, Subtitle B: Air Pollution Chapter 1: Pollution Control Board Part 214 Sulfur Limitations, Subpart C: Existing Solid Fuel Combustion Emission Sources, § 214.141 Sources Located in Metropolitan Areas, paragraphs b), c) and d), and Subpart X: Utilities, § 214.560 Scope and § 214.561 E.D. Edwards Electric Generating Station effective May 20, 1986.

(89) On March 17, 1989, and August 28, 1990, the State of Illinois submitted a revision to the Illinois State Implementation Plan. The revision is contained in subpart J, § 201.281 and subpart L, §§ 201.401-.408 of part 210 of title 35 of the Illinois Administrative Code. This revision provides a legally enforceable procedure for continuously monitoring and recording emissions to determine the status of compliance of certain stationary source categories and complies with 40 CFR 51.214 and part 51, appendix P. The rules were adopted by the Illinois Pollution Control Board on December 15, 1988, published (13 Ill. Reg. 2066) and became effective February 3, 1989. The rules were corrected for an omission, published on November 15, 1989, (13 Ill Reg. 19444), and became effective December 5, 1989. In a November 18, 1991, letter from Bharat Mathur, then Manager, Division of Air Pollution Control, Illinois Environmental Protection Agency (IEPA) to Stephen Rothblatt, Chief, Regulation Development Branch, Region 5, USEPA, Illinois committed to notify USEPA of any pending construction or operating permit application during the 30 day public comment period which is part of Illinois' permit issuance process (Section 203.150). This commitment is part of the administrative record of USEPA's approval of the Illinois' operating permit program for the purpose of issuing federally enforceable operating permits at 40 CFR 52.720 (c) (84) and 52.737 on December 17, 1992 (57 FR 59928). USEPA may deem a permit not federally enforceable if monitoring provisions do not comply with the requirements of 40 CFR 51.214, part 51, appendix P or § 51.165.

(i) Incorporation by reference.

(A) Title 35: Environmental Protection; Subtitle B: Air Pollution; Chapter I: Pollution Control Board; Subchapter a: Permits and General Provisions; Part 201: Permits and General Provisions, Subpart J: Monitoring and Testing, Section 201.281; and Subpart L: Continuous Monitoring, Sections 201.401 through 201.408, adopted at Ill. Reg. 2066, effective February 3, 1989.

(90) On June 11, 1991, Illinois submitted regulations concerning the emission of volatile organic compounds from pharmaceutical manufacturing.

(i) Incorporation by reference.

(A) Title 35 of the Illinois Administrative Code: Environmental Protection, Subtitle B: Air Pollution, Chapter 1: Pollution Control Board, Subchapter C: Emissions Standards and Limitations for Stationary Sources, Part 215: Organic Material Emission Standards and Limitations, Subpart T: Pharmaceutical Manufacturing, Subpart A: General Provisions: Amendments to sections 215.102 and 215.105 and Creation of section 215.108. Adopted at 15 ILLINOIS REGISTER 80 18, effective May 14, 1991.

(B) Title 35 of the Illinois Administrative Code: Environmental Protection, Subtitle B: Air Pollution, Chapter 1: Pollution Control Board, Subchapter C: Emissions Standards and Limitations for Stationary Sources, Part 211: Definitions and General Provisions, Subpart B: Definitions. Adopted at 15 ILLINOIS REGISTER 79 01, effective May 14, 1991.

(91) [Reserved]

(92) On June 4, 1992, the State submitted particulate matter regulations adopted as part of Pollution Control Board Proceeding R91–35. These regulations concern particulate matter ambient limits and episode regulations.

(i) Incorporation by reference. Illinois Administrative Code, Title 35: Environmental Protection, Subtitle B: Air Pollution, Chapter I: Pollution Control Board

(A) Part 212 Visible and Particulate Matter Emissions: Section 212.113 Incorporations by Reference; section 212.424 Fugitive Particulate Matter Control for the Portland Cement Manufacturing Plant and Associated Quarry Operations located in LaSalle County, South of the Illinois River; section 212.443 Coke Plants; section 212.445 Blast Furnace Cast Houses; adopted at 16 Illinois Register 8204, effective May 15, 1992.

(B) Part 243 Air Quality Standards: Section 243.108 Incorporations by Reference; section 243.120 PM_{-10}; section 243.121 Repealed; adopted at 16 Illinois Register 8185, effective May 15, 1992.

(C) Part 244 Episodes: Section 244.101 Definitions; section 244.106 Monitoring; section 244.107 Determination of Areas Affected; section 244.121 Local Agency Responsibilities; section 244.161 Advisory Alert and Emergency Levels; section 244.162 Criteria for Declaring and Advisory; section 244.163 Criteria for Declaring a Yellow Alert; section 244.166 Criteria for Terminating Advisory, Alert and Emergency; section 244.167 Episode Stage Notification; section 244.168 Contents of Episode Stage Notification; section 244.169 Actions During Episode Stages Adopted; section 244 appendix D; adopted at 16 Illinois Register 8191, effective May 15, 1992.

(93) On September 30, 1992, the State submitted rules regulating volatile organic compound emissions from gasoline dispensing facilities' motor vehicle fuel operations.

(i) Incorporation by reference.

(A) Illinois Administrative Code, title 35 Environmental Protection, subtitle B: Air Pollution, chapter I: Pollution Control Board part 218: Organic Material Emission Standards and Limitations for the Chicago Area; subpart Y: Gasoline Distribution; § 218.583 Gasoline Dispensing Facilities—Storage Tank Filling Operations, amended at 16 Illinois Register 13864 effective August 24, 1992, and; § 218.586 Gasoline Dispensing Facilities—Motor Vehicle Fueling Operations, added at 16 Illinois Register 13864, effective August 24, 1992.

(B) [Reserved]

(ii) Additional materials.

(A) Stage II Vapor Recovery SIP Program Description dated September 29, 1992.

(94) On July 30, 1986, the State submitted particulate boiler rules intended to replace rule 203(g)(1) which was vacated by the Courts. No action is taken on § 212.209 because the variance which it authorized has expired. On July 22, 1988, the State submitted opacity rules intended to replace rule 202(b) which had been vacated by the Courts. Also on July 22, 1988, the State submitted Illinois Pollution Control Board procedural rules for considering Air Adjusted Standard Procedures.

(i) Incorporation by reference.

(A) Title 35: Environmental Protection, Illinois Administrative Code, Subtitle B: Air Pollution; Chapter 1: Pollution Control Board; part 212 Visible and Particulate Matter Emissions; subpart E: Particulate Matter Emission from Fuel Combustion Emission Sources; §§ 212.201, 212.202, 212.203 and 212.204. Amended or added at 10 Ill Reg. 12637, effective July 9, 1986.

(B) Title 35: Environmental Protection, Illinois Administrative Code, Subtitle B: Air Pollution; Chapter 1: Pollution Control Board; part 212 Visible and Particulate Matter Emissions; subpart B: Visible Emissions. Amended or added at 12 Ill. Reg 12492, effective July 13, 1988.

(C) Title 35: Environmental Protection, Illinois Administrative Code; Subtitle A: General Provisions; Chapter 1: Pollution Control Board; part 106: Hearings Pursuant to Specific Rules; subpart E: Air Adjusted Standards Procedures. Added at 12 Ill. Reg 12484, effective July 13, 1988.

(95) On October 16, 1991, and November 13, 1991, the State submitted particulate matter regulations adopted as part of Pollution Control Board Proceeding R91–6. These regulations concern particulate matter controls for LaSalle County, Illinois.

(i) Incorporation by reference. Illinois Administrative Code, Title 35: Environmental Protection, Subtitle B: Air Pollution, Chapter I: Pollution Control Board.

(A) The addition of definitions for "Condensible PM–10", "PM–10", "Portland Cement Manufacturing Process Emission Source", and the modification

of the definition of "Portland Cement Process" to Part 211 Definitions and General Provisions: Section 211.122 Definitions; adopted at 15 Illinois Register 15673, effective October 14, 1991.

(B) Part 212 Visible and Particulate Matter Emissions: Section 212.110 Measurement Methods; the addition of an abbreviation for pounds per hour to Section 212.111 Abbreviations and Units; additions and deletions to Section 212.113 Incorporations by Reference including the addition and/or renumbering of paragraphs (a), (b), (c), (d), (e), and (h) and the deletion of paragraphs earlier numbered as (a) and (f); Section 212.423 Emission Limits for Portland Cement the Manufacturing Plant Located in LaSalle County, South of the Illinois River; adopted at 15 Illinois Register 15708, effective October 4, 1991.

(96) On November 12, 1992, the State of Illinois submitted a Small Business Stationary Source Technical and Environmental Assistance Program for incorporation in the Illinois State Implementation Plan as required by section 507 of the Clean Air Act Amendments of 1990. Included in the State's submittal were a program description, newly adopted enabling legislation including new subsection 20 of section 39.5 of the Environmental Protection Act, Public Act 87–1213, and new subsection 46.13(a) of the Civil Administrative Code, Public Act 87–1177, and a May 4, 1992, State of Illinois, Illinois Department of Commerce and Community Affairs (DCCA), Illinois Environmental Protection Agency (IEPA) Interagency Agreement defining the responsibilities of DCCA and IEPA in developing and implementing the Small Business Stationary Source Technical and Environmental Compliance Assistance Program (Program).

(i) *Incorporation by reference.* (A) Subsection 20 of section 39.5 of the Environmental Protection Act adopted as Public Act 87–1213 signed into law on September 26, 1992, and effective upon signature.

(B) Subsection 46.13(a) of the Civil Administrative Code adopted as Public Act 87–1177 signed into law on September 21, 1992, and effective upon signature.

(ii) *Other material.* (A) Program description.

(B) May 4, 1992, Interagency Agreement between DCCA and IEPA defining the responsibilities of each agency in developing and implementing the program.

(97) On October 12, 1992, and June 2, 1993, the State of Illinois submitted a requested revision to the Illinois State Implementation Plan (SIP) intended to satisfy the requirements of section 182(a)(3)(B) of the Clean Air Act as amended in 1990. Included were State rules establishing procedures for the annual reporting of emissions of volatile organic material (VOM) and oxides of nitrogen (NO_X) as well as other regulated air pollutants by stationary sources in ozone nonattainment areas. Also included was a June 2, 1993, commitment letter from the Illinois Environmental Protection Agency (IEPA) to fulfill the reporting requirements of the United States Environmental Protection Agency by performing the following tasks:

(i) Update the AIRS Facility Subsystem using the annual emissions report data. The 1992 data will be updated by December 31, 1993, and subsequent updates will be made by July 1st of each year.

(ii) Retain annual emissions reports for at least three (3) years.

(iii) Develop and submit Emissions Statement Status Reports (ESSR) on a quarterly basis each year until all applicable sources have submitted the required annual emissions reports. The report will show the total number of facilities from which emission statement data was requested, the number of facilities that met the provisions, and the number of facilities that failed to meet the provisions. Sources that are delinquent in submitting their emissions statements will be individually listed if they emit 500 tons per year or more of VOM or 2500 tons per year or more of NO_X. The report will also contain the emission data requested in Appendix F of the July 6, 1992, Draft Guidance on the Implementation of an Emission Statement Program.

(iv) All sources subject to the emission statement requirements must report, at a minimum, the information

specified under subpart C of part 254 of chapter II of subtitle B of title 35 of the Illinois Administrative Code.

(A) Incorporation by reference. Illinois Administrative Code, Title 35: Environmental Protection, Subtitle B: Air Pollution, Chapter II: Environmental Protection Agency, Part 254: Annual Emissions Report, adopted at 17 Illinois Register 7782, effective May 14, 1993.

(B) *Other material.* June 2, 1993, commitment letter.

(98) On July 21, 1986, the State a submitted revision to its particulate matter regulations to incorporate an emission limit for continuous automatic stoking animal pathological waste incinerators.

(i) Incorporation by reference.

(A) Title 35: Environmental Protection, Subtitle B: Air Pollution, Chapter 1: Pollution Control Board, Part 212 Visible and Particulate Matter Emissions, subpart D: Particulate Matter Emissions from Incinerators, section 212.185 Continuous Automatic Stoking Animal Pathological Waste Incinerators. Adopted December 18, 1986, added at 11 Ill. Reg. 1410, effective December 30, 1986.

(99) On January 4, 1989, the State submitted revisions to its sulfur dioxide rules.

(i) Incorporation by reference.

(A) Title 35: Environmental Protection, Subtitle B: Air Pollution, Chapter 1: Pollution Control Board, Subchapter c: Emission Standards and Limitations for Stationary Sources, Part 214 Sulfur Limitations, Subpart A: General Provisions, section 214.102 Abbreviations and Units. Amended at 12 Ill. Reg. 20778, effective December 5, 1988.

(B) Title 35: Environmental Protection, Subtitle B: Air Pollution, Chapter 1: Pollution Control Board, Subchapter c: Emission Standards and Limitations for Stationary Sources, Part 214 Sulfur Limitations, Subpart A: General Provisions, section 214.104 Incorporations by Reference. Amended at 15 Ill. Reg. 1017, effective January 15, 1991.

(C) Title 35: Environmental Protection, Subtitle B: Air Pollution, Chapter 1: Pollution Control Board, Subchapter c: Emission Standards and Limitations for Stationary Sources, Part 214 Sulfur Limitations, Subpart O: Petroleum Refining, Petrochemical and Chemical Manufacturing, section 214.382 Petroleum and Petrochemical Processes. Amended at 12 Ill. Reg. 20778, effective December 5, 1988.

(100) On October 21, 1993, the State submitted definitions codified as part of the Illinois Administrative Code for incorporation in the Illinois State Implementation Plan.

(i) *Incorporation by reference.*

Illinois Administrative Code Title 35: Environmental Protection, Subtitle B: Air Pollution, Chapter I: Pollution Control Board, Subchapter c: Emission Standards and Limitations for Stationary Sources, Part 211 Definitions and General Provisions, Subpart A: General Provisions: Sections 211.101 and 211.102, Subpart B: Definitions, Sections 211.121, 211.130, 211.150, 211.170, 211.210, 211.230, 211.250, 211.290, 211.310, 211.330, 211.350, 211.370, 211.390, 211.410, 211.430, 211.450, 211.470, 211.490, 211.510, 211.530, 211.550, 211.570, 211.590, 211.610, 211.630, 211.650, 211.670, 211.690, 211.710, 211.730, 211.750, 211.770, 211.790, 211.810, 211.830, 211.850, 211.870, 211.890, 211.910, 211.930, 211.950, 211.970, 211.990, 211.1010, 211.1050, 211.1090, 211.1110, 211.1130, 211.1150, 211.1170, 211.1190, 211.1210, 211.1230, 211.1250, 211.1270, 211.1290, 211.1310, 211.1330, 211.1350, 211.1370, 211.1390, 211.1410, 211.1430, 211.1470, 211.1490, 211.1510, 211.1530, 211.1550, 211.1570, 211.1590, 211.1610, 211.1630, 211.1650, 211.1670, 211.1690, 211.1710, 211.1730, 211.1750, 211.1770, 211.1790, 211.1810, 211.1830, 211.1850, 211.1870, 211.1890, 211.1910, 211.1930, 211.1950, 211.1970, 211.1990, 211.2010, 211.2050, 211.2070, 211.2090, 211.2110, 211.2130, 211.2150, 211.2170, 211.2190, 211.2210, 211.2230, 211.2250, 211.2270, 211.2310, 211.2330, 211.2350, 211.2370, 211.2390, 211.2410, 211.2430, 211.2450, 211.2470, 211.2490, 211.2510, 211.2530, 211.2550, 211.2570, 211.2590, 211.2650, 211.2670, 211.2690, 211.2710, 211.2730, 211.2750, 211.2770, 211.2790, 211.2810, 211.2830, 211.2850, 211.2870, 211.2890, 211.2910, 211.2930, 211.2950, 211.2970, 211.2990, 211.3010, 211.3030, 211.3050, 211.3070, 211.3090, 211.3110, 211.3130, 211.3150, 211.3170, 211.3190, 211.3210, 211.3230, 211.3250, 211.3270, 211.3290, 211.3310, 211.3330, 211.3350, 211.3370, 211.3390, 211.3410, 211.3430, 211.3450, 211.3470, 211.3490, 211.3510, 211.3530, 211.3550,

211.3570, 211.3590, 211.3610, 211.3630, 211.3650, 211.3670, 211.3690, 211.3710, 211.3730, 211.3750, 211.3770, 211.3790, 211.3810, 211.3830, 211.3850, 211.3870, 211.3890, 211.3910, 211.3930, 211.3970, 211.3990, 211.4010, 211.4030, 211.4050, 211.4070, 211.4090, 211.4110, 211.4130, 211.4150, 211.4170, 211.4190, 211.4210, 211.4230, 211.4250, 211.4270, 211.4290, 211.4310, 211.4330, 211.4350, 211.4370, 211.4390, 211.4410, 211.4430, 211.4450, 211.4470, 211.4490, 211.4510, 211.4530, 211.4550, 211.4590, 211.4610, 211.4630, 211.4650, 211.4670, 211.4690, 211.4710, 211.4730, 211.4750, 211.4770, 211.4790, 211.4810, 211.4870, 211.4890, 211.4910, 211.4930, 211.4950, 211.4990, 211.5030, 211.5050, 211.5070, 211.5090, 211.5110, 211.5130, 211.5150, 211.5170, 211.5185, 211.5190, 211.5210, 211.5230, 211.5250, 211.5270, 211.5310, 211.5330, 211.5350, 211.5370, 211.5410, 211.5430, 211.5450, 211.5470, 211.5490, 211.5510, 211.5550, 211.5570, 211.5590, 211.5610, 211.5630, 211.5650, 211.5670, 211.5690, 211.5710, 211.5730, 211.5750, 211.5770, 211.5790, 211.5810, 211.5830, 211.5850, 211.5870, 211.5890, 211.5910, 211.5930, 211.5950, 211.5970, 211.5990, 211.6010, 211.6030, 211.6050, 211.6070, 211.6090, 211.6130, 211.6150, 211.6190, 211.6210, 211.6230, 211.6270, 211.6290, 211.6310, 211.6330, 211.6350, 211.6370, 211.6390, 211.6410, 211.6430, 211.6450, 211.6470, 211.6490, 211.6510, 211.6530, 211.6550, 211.6570, 211.6590, 211.6610, 211.6670, 211.6690, 211.6730, 211.6750, 211.6770, 211.6790, 211.6810, 211.6850, 211.6870, 211.6890, 211.6910, 211.6930, 211.6950, 211.6970, 211.6990, 211.7010, 211.7030, 211.7070, 211.7090, 211.7110, 211.7130, 211.7150, 211.7170, 211.7190, 211.7210, 211.7230, 211.7250, 211.7270, 211.7290, 211.7310, 211.7330, 211.7350.

These section were added at 17 Ill. Reg. 16504, effective September 27, 1993.

(101) On October 21, 1993, the state submitted volatile organic compound (VOC) control regulations for incorporation in the Illinois State Implementation for ozone.

(i) *Incorporation by reference.*

(A) Illinois Administrative Code Title 35: Environmental Protection, Subtitle B: Air Pollution, Chapter I: Pollution Control Board, Subchapter c: Emissions Standards and Limitations for Stationary Sources, Part 218: Organic Material Emission Standards and Limitations for the Chicago Area Subparts A, B, C, E, F, G, H, Q, R, S, T, V, W, X, Y, Z, AA, BB, and Section 218.

Appendix A, B, C, and D. These regulations were adopted at R91–7 at 15 Ill. Reg. 12231, effective August 16, 1991; amended in R91–23 at Ill. Reg. 13564, effective August 24, 1992; amended in R91–28 and R91–30 at 16 Ill. Reg. 13864, effective August 24, 1992; amended in R93–9 at 17 Ill. Reg. 16636, effective September 27, 1993. The specific adoption and effective dates of the rules incorporated by reference follow.

(*1*) Adopted at R91–7 at 15 Ill. Reg. 12231, effective August 16, 1991. Subpart A 218.108; Subpart C: 218.142; Subpart R: 218.442, 218.444, 218.448, 218.451; Subpart T: 218.484, 218.488; Subpart V: 218.526; Subpart X: 218.561, 218.563; Subpart Z: 218.607; Subpart AA: 218.625, 218.626 and 218.630.

(*2*) Amended in R93–9 at 17 Ill. Reg. 16636, effective September 27, 1993. Subpart A: 218.100, 218.101, 218.102, 218.103, 218.104, 218.105, 218.106, 218.107, 218.109, 218.110, 218.111, 218.112; Subpart B: 218.121, 218.122, 218.123, 218.124; Subpart C: 218.141, 218.143, 218.144; Subpart E: 218.181, 218.182, 218.183, 218.184, 218.186; Subpart F: 218.204, 218.205, 218.206, 218.207, 218.208, 218.209, 218.210, 218.211; Subpart G: 218.301, 218.302, 218.303, 218.304; Subpart H: 218.401, 218.402, 218.403, 218.404, 218.405; Subpart Q: 218.421, 218.422, 218.423, 218.424, 218.425, 218.426, 218.427, 218.428, 218.429; Subpart R: 218.441, 218.443, 218.445, 218.446, 218.447, 218.449, 218.450, 218.452; Subpart S: 218.461, 218.462, 218.463, 218.464; Subpart T: 218.480, 218.481, 218.482, 218.483, 218.485, 218.486, 218.487, 218.489; Subpart V: 218.525; Subpart W: 218.541; Subpart X: 218.562; Subpart Y: 218.581, 218.582, 218.583, 218.584, 218.585, 218.586; Subpart Z: 218.601, 218.602, 218.603, 218.608, 218.609, 218.610, 218.611; Subpart AA: 218.620, 218.621, 218.623, 218.624, 218.628, 218.636, 218.637; Subpart BB: 218.640, 218.642, 218.644, Section 218: Appendix A, Appendix B, Appendix C, Appendix D.

(B) Illinois Administrative Code Title 35: Environmental Protection, Subtitle B: Air Pollution, Chapter I: Pollution Control Board, Subchapter c: Emissions Standards and Limitations for Stationary Sources, Part 219: Organic Material Emission Standards and Limitations for Metro East Area Subparts

A, B, C, E, F, G, H, Q, R, S, T, V, W, X, Y, Z, AA, BB and Section 219 Appendix A, B, C, and D. These regulations were adopted at R91–8 at Ill. Reg. 12491, effective August 16, 1991; amended in R91–24 at 16 Ill. Reg. 13597, effective August 24, 1992; amended in R91–30 at 16 Ill. Reg. 13833, effective August 24, 1992, emergency amendment in R93–12 at Ill. Reg. 8295, effective May 24, 1993, for a maximum of 150 days, amended in R93–9 at 17 Ill. Reg. 16918, effective September 27, 1993 and October 21, 1993. The specific adoption and effective dates of the rules incorporated by reference follow.

(*1*) Adopted at R91–8 at 15 Ill. Reg. 12491, effective August 16, 1991: Subpart A: 219.103, 219.108; Subpart C: 219.142; Subpart R: 219.442, 219.444, 219.448, 219.451; Subpart T: 219.484, 219.488; Subpart V: 219.526; Subpart X: 219.561, 219.563; Subpart Z: 219.607; Subpart AA: 219.625, 219.626, 219.630.

(*2*) Amended in R93–9 at 17 Ill. Reg. 16918, effective September 27, 1993:

Subpart A: 219.100, 219.101, 219.102, 219.104, 219.105, 219.106, 219.107, 219.109, 219.110, 219.111, 219.112;
Subpart B: 219.121, 219.122, 219.123, 219.124;
Subpart C: 219.141, 219.143, 219.144;
Subpart E: 219.181, 219.182, 219.183, 219.184, 219.186;
Subpart F: 219.204, 219.205, 219.206, 219.207, 219.208, 219.209, 219.210, 219.211;
Subpart G: 219.301, 219.302, 219.303, 219.304;
Subpart H: 219.401, 219.402, 219.403, 219.404, 219.405;
Subpart Q: 219.421, 219.422, 219.423, 219.424, 219.425, 219.426, 219.427, 219.428, 219.429;
Subpart R: 219.441, 219.443, 219.445, 219.446, 219.447, 219.449, 219.450, 219.452;
Subpart S: 219.461, 219.462, 219.463, 219.464;
Subpart T: 219.480, 219.481, 219.482, 219.483, 219.485, 219.486, 219.487, 219.489;
Subpart V: 219.525;
Subpart W: 219.541;
Subpart X: 219.562;
Subpart Y: 219.581, 219.582, 219.583, 219.584, 219.585, 219.586;
Subpart Z: 219.601, 219.602, 219.603, 219.608, 219.609, 219.610, 219.611;
Subpart AA: 219.620, 219.621, 219.623, 219.624, 219.628, 219.636, 219.637;
Subpart BB: 219.640, 219.642, 219.644;
Section 219: Appendix A, Appendix B, Appendix C, Appendix D.

(102) On October 21, 1993 and March 4, 1994, the State submitted volatile organic compound control regulations for incorporation in the Illinois State Implementation Plan for ozone.

(i) *Incorporation by reference.*

(A) Title 35: Environmental Protection, Subtitle B: Air Pollution, Chapter I: Pollution Control Board, Subchapter c: Emission Standards and Limitations for Stationary Sources, Part 211: Definitions and General Provisions, Subpart B: Definitions, Sections 211.270, 211.1070, 211.2030, 211.2610, 211.3950, 211.4050, 211.4830, 211.4850, 211.4970, 211.5390, 211.5530, 211.6110, 211.6170, 211.6250, 211.6630, 211.6650, 211.6710, 211.6830, 211.7050. These sections were adopted on January 6, 1994, Amended at 18 Ill. Reg. 1253, and effective January 18, 1994.

(B) Illinois Administrative Code Title 35: Environmental Protection, Subtitle B: Air Pollution, Chapter I: Pollution Control Board, Subchapter c: Emissions Standards and Limitations for Stationary Sources, Part 218: Organic Material Emissions Standards and Limitations for the Chicago Area, Subpart PP: 218.927, 218.928; Subpart QQ: 218.947, 218.948; Subpart RR: 218.967, 218.968; Subpart TT: 218.987, 218.988; Subpart UU: 218.990. These sections were adopted on September 9, 1993, Amended at 17 Ill. Reg. 16636, effective September 27, 1993.

(C) Illinois Administrative Code Title 35: Environmental Protection, Subtitle B: Air Pollution, Chapter I: Pollution Control Board, Subchapter c: Emissions Standards and Limitations for Stationary Sources, Part 218: Organic Material Emissions Standards and Limitations for the Chicago Area, Subpart A: 218.106, 218.108, 218.112, 218.114; Subpart H: 218.402; Subpart Z: 218.602, 218.611; Subpart AA: 218.620, 218.623 (repealed); Subpart CC; Subpart DD; Subpart PP: 218.920, 218.926; Subpart QQ: 218.940, 218.946; Subpart RR: 218.960, 218.966; Subpart TT: 218.980, 218.986; Subpart UU: 218.991. These sections were adopted on January 6, 1994, Amended at 18 Ill. Reg. 1945, effective January 24, 1994.

(103) On February 11, 1993, Illinois submitted a site specific revision to its carbon monoxide State Implementation Plan for a General Motors Corporation iron foundry located adjacent to Interstate 74 at G Street in Vermilion County, Illinois.

(i) *Incorporation by reference.*

(A) Illinois Administrative Code; Title 35 Environmental Protection; Subtitle B: Air Pollution; Chapter I: Pollution Control Board; Subchapter C: Emission Standards and Limitations for Stationary Sources; P 216: Carbon Monoxide Emissions; Subpart O: Primary and Fabricated Metal Products; Section 216.382 Exception, General Motors Ferris Foundry in Vermilion County. Added at 16 Illinois Register 18075, effective November 13, 1992.

(104) [Reserved]

(105) On February 7, 1994, the State submitted revisions intended to create a permit program for small sources. The purpose of these revisions is to lessen the permitting burden on small sources and the permitting authority by reducing the frequency and/or the requirement of operating permit renewal for sources emitting a total of less than 25 tons per year of regulated air pollutants. A permit obtained through these procedures is intended to continue as a legally binding State document until the source modifies its operations, withdraws its permit or becomes subject to a new applicable requirement. At that time, the State will determine whether the small source procedures continue to be appropriate and issue a revised small source permit or direct the source in following the correct permit procedures. Since small source permits are not subject to a public comment period or review by USEPA, they are not federally enforceable and cannot be used to limit sources' potential to emit and thereby exempt them from the requirements of the title v operating permit program.

(i) Incorporation by reference. Illinois Administrative Code, Title 35: Environmental Protection, Subtitle B: Air Pollution, Chapter I: Pollution Control Board.

(A) Subchapter a: Permits and General Provisions, Part 201: Permits and General Provisions.

(1) Subpart D: Permit Applications and Review Process, Section 201.162 Duration and Section 201.163 Joint Construction and Operating Permits. Amended at 17 Ill. Reg., effective December 7, 1993.

(2) Subpart E: Special Provisions for Operating Permits for Certain Smaller Sources, Section 201.180 Applicability, Section 201.181 Expiration and Renewal and Section 201.187 Requirement for a Revised Permit Added at 17 Ill. Reg., effective December 7, 1993.

(B) Subchapter C: Emission Standards and Limitations for Stationary Sources, Part 211: Definitions and General Provisions, Subpart B: Definitions, Section 211.5500 Regulated Air Pollutant. Adopted at 17 Ill. Reg., effective December 7, 1993.

(106) On November 23, 1994, the State submitted amended marine vessel loading rules which consisted of revised definitions, and revisions to the Ozone Control Plan for the Chicago and Metro-East St. Louis areas.

(i) *Incorporation by reference.*

Illinois Administrative Code, Title 35: Environmental Protection, Subtitle B: Air Pollution, Chapter I: Pollution Control Board, Subchapter c: Emissions Standards and Limitations for Stationary Sources.

(A) Part 211: Definitions and General Provisions, Subpart B: Definitions, Sections 211.3480 Loading Event and 211.3660 Marine Vessel added at 18 Ill. Reg. 166769, effective October 25, 1994; Sections 211.3650 Marine Terminal, and 211.6970 Vapor Collection System, and Section 211.6990 Vapor Control System amended at 18 Ill. Reg. 16769, effective October 25, 1994.

(B) Part 218: Organic Material Emission Standards and Limitations for the Chicago Area, Subpart A; General Provisions, Sections 218.101 Savings Clause and 218.106 Compliance Dates amended at 18 Ill. Reg. 16392, effective October 25, 1994; Subpart GG: Marine Terminals, Sections 218.760 Applicability, 218.762 Control Requirements, 218.764 Compliance Certification, 218.766 Leaks, 218.768 Testing and Monitoring, and 218.770 Recordkeeping and Reporting added at 18 Ill. Reg. 16392, effective October 25, 1994; Appendix E: List of Affected Marine Terminals amended at 18 Ill. Reg. 16392, effective October 25, 1994.

(C) Part 219: Organic Material Emissions Standards and Limitations for the Metro-East Area, Subpart A; General Provisions, Sections 219.101 Savings Clause and 219.106 Compliance Dates amended at 18 Ill. Reg. 16415, effective October 25, 1994; Subpart GG:

Marine Terminals, Sections 219.760 Applicability, 219.762 Control Requirements, 219.764 Compliance Certification, 219.766 Leaks, 219.768 Testing and Monitoring, and 219.770 Recordkeeping and Reporting added at 18 Ill. Reg. 16415, effective October 25, 1994.

(D) Part 219: Organic Material Emissions Standards and Limitations for the Metro-East Area, Appendix E: List of affected Marine Terminals amended at 20 Ill. Reg. 3848. Effective February 15, 1996.

(107) On October 25, 1994, Illinois submitted a regulation which requires gasoline dispensing operations in the Chicago and Metro-East St. Louis ozone nonattainment areas that have storage tanks of at least 575 gallons to install pressure/vacuum relief valves on storage tank vent pipes. Tanks installed before January 1, 1979, are exempt from the rule if they have a capacity of less than 2000 gallons, as are tanks that are equipped with floating roofs or equivalent control devices that have been approved by the State and USEPA.

(i) *Incorporation by reference.* Illinois Administrative Code Title 35: Environmental Protection, Subtitle B: Air Pollution, Chapter I: Pollution Control Board, Subchapter c: Emissions Standards and Limitations for Stationary Sources.

(A) Part 201 Permits and General Provisions, Section 201.302 Reports. Amended at 18 Ill. Reg. 15002. Effective September 21, 1994.

(B) Part 211 Definitions and General Provisions, Section 211.5060 Pressure/Vacuum Relief Valve. Added at 18 Ill. Reg. 14962. Effective September 21, 1994.

(C) Part 218 Organic Material Emission Standards and Limitations for Chicago Area, Section 218.583 Gasoline Dispensing Operations–Storage Tank Filling Operations. Amended at 18 Ill. Reg. 14973. Effective September 21, 1994.

(D) Part 219 Organic Material Emission Standards and Limitations for Metro East Area, Section 219.583 Gasoline Dispensing Operations–Storage Tank Filling Operations. Amended at 18 Ill. Reg. 14987. Effective September 21, 1994.

(108) On January 25, 1994, the State submitted a revision to its ozone State Implementation Plan (SIP) for Quantum Chemical Corporation's facility located in Morris, Aux Sable Township, Grundy County, Illinois. It grants an adjusted standard from Parts 35 Illinois Administration Code (IAC) 218.966 and 218.986 as they apply to specific units or plants within this facility.

(i) *Incorporation by reference.*

(A) Illinois Pollution Control Board Final Opinion and Order, AS 92–14, adopted on October 7, 1993, and effective on October 7, 1993.

(109) On October 25, 1994, Illinois submitted a regulation that reduces the maximum allowable volatility for gasoline sold in the Metro-East St. Louis ozone nonattainment area, which includes Madison, Monroe, and St. Clair Counties, to 7.2 pounds per square inch Reid Vapor Pressure (RVP) during the summer control period. On May 14, 1996, Illinois submitted an amendment to its RVP rule which changes the summer regulatory control period of the program. The summer control period for the Illinois RVP program is June 1 to September 15.

(i) *Incorporation by reference.* Illinois Administrative Code Title 35: Environmental Protection, Subtitle B: Air Pollution, Chapter I: Pollution Control Board, Subchapter c: Emissions Standards and Limitations for Stationary Sources, Part 219 Organic Material Emission Standards and Limitations for Metro East Area.

(A) Section 219.112 Incorporation by Reference. Amended at 18 Ill. Reg. 14987. Effective September 21, 1994.

(B) [Reserved]

(C) Section 219.585 Gasoline Volatility Standards. Amended at 20 Ill. Reg. 3848: Effective February 15, 1996.

(110) On September 26, 1994, the State of Illinois submitted a revision to its ozone State Implementation Plan for the J. M. Sweeney Company located in Cicero, Cook County, Illinois. It grants a compliance date extension from Stage II vapor control requirements (35 Ill. Adm. Code 218.586) from November 1, 1993, to March 31, 1995.

(i) *Incorporation by reference.*

(A) Illinois Pollution Control Board Final Opinion and Order, PCB 93–257, adopted on September 1, 1994, and effective on September 1, 1994. Certification dated 9/23/94 of Acceptance by J. M. Sweeney.

(111) On July 29, 1994, Illinois submitted regulations which require adoption and implementation of particulate matter contingency measures for Illinois' four moderate particulate matter nonattainment areas. Sources in the nonattainment areas which emit at least 15 tons of particulate matter must submit two levels of contingency measures, which will then become Federally enforceable. Sources will be required to implement the contingency measures if an exceedance of the National Ambient Air Quality Standard for Particulate Matter is measured, or if the United States Environmental Protection Agency finds that an area has failed to attain the National Ambient Air Quality Standards.

(i) *Incorporation by reference.*

Illinois Administrative Code Title 35: Environmental Protection, Subtitle B: Air Pollution, Chapter I: Pollution Control Board;

(A) Part 106 Hearings Pursuant to Specific Rules, Section 106.930—Applicability, Section 106.931—Petition for Review, Section 106.932—Response and Reply, Section 106.933—Notice and Hearing, Section 106.934—Opinion and Order. Amended at 18 Ill. Reg. 11579–11586. Effective July 11, 1994.

(B) Part 212 Visible and Particulate Matter Emissions, Section 212.700—Applicability, Section 212.701—Contingency Measure Plans, Submittal and Compliance Date, Section 212.702—Determination of Contributing Sources, Section 212.703—Contingency Measure Plan Elements, Section 212.704—Implementation, Section 212.705—Alternative Implementation. Added at 18 Ill. Reg. 11587–11606. Effective July 11, 1994.

(112) On March 28, 1995, the State of Illinois submitted a revision to its ozone State Implementation Plan for P & S, Incorporated's facility located in Wood Dale, Du Page County, Illinois. It grants a compliance date extension from Stage II vapor control requirements (35 Ill. Adm. Code 218.586) from November 1, 1994 until April 1, 1996, or 60 days after notification to P & S, Incorporated that the roadway construction complicating the installation of Stage II equipment will be abandoned for any reason, whichever is sooner.

(i) *Incorporation by reference.*

(A) Illinois Pollution Control Board Final Opinion and Order, PCB 94–299, adopted on February 16, 1995, and effective on February 16, 1995. Certification dated March 1, 1995 of Acceptance by P & S, Incorporated.

(113) On April 27, 1995, the Illinois Environmental Protection Agency requested a revision to the Illinois State Implementation Plan in the form of revisions to the State's New Source Review rules for sources in the Chicago and metropolitan East St. Louis ozone nonattainment areas and are intended to satisfy Federal requirements of the Clean Air Act as amended in 1990. The State's New Source Review provisions are codified at Title 35: Environmental Protection Subtitle B: Air Pollution, Chapter I: Pollution Control Board, Subchapter a: Permits and General Provisions. Part 203 Major Stationary Sources Construction and Modification is amended as follows:

(i) *Incorporation by reference.*

(A) Title 35: Environmental Protection, Subpart A: General Provisions, Section 203.101 Definitions, Section 203.107 Allowable Emissions, Section 203.110 Available Growth Margin, Section 203.112 Building, Structure and Facility, Section 203.121 Emission Offset, Section 203.122 Emissions Unit, Section 203.123 federally Enforceable, Section 203.126 Lowest Achievable Emission Rate, Section 203.128 Potential to Emit, Section 203.145 Volatile Organic Material, Section 203.150 Public Participation. Effective April 30, 1993.

(B) Title 35: Environmental Protection, Subpart B: Major Stationary Sources in Nonattainment Areas, Section 203.201 Prohibition, Section 203.203 Construction Permit Requirement and Application, Section 203.206 Major Stationary Source, Section 203.207 Major Modification of a Source, Section 203.208 Net Emission Determination, Section 203.209 Significant Emissions Determination. Effective April 30, 1993.

(C) Title 35: Environmental Protection, Subpart C: Requirements for Major Stationary Sources in Nonattainment Areas, Section 203.301 Lowest Achievable Emission Rate, Section 203.302 Maintenance of Reasonable Further Progress and Emission Offsets, Section 203.303 Baseline and Emission Offsets Determination, Section 203.306

Analysis of Alternatives. Effective April 30, 1993.

(D) Title 35: Environmental Protection, Subpart H: Offsets for Emission Increases From Rocket Engines and Motor Firing, Section 203.801 Offsetting by Alternative or Innovative Means. Effective April 30, 1993. Published in the Illinois Register, Volume 17, Issue 20, May 14, 1993.

(114) On November 30, 1994, the State submitted an amended Synthetic Organic Chemical Manufacturing Industry Air Oxidation Process rule which consisted of extended applicability and tightened control measures to the Ozone Control Plan for the Chicago and Metro-East St. Louis areas.

(i) *Incorporation by reference.* Illinois Administrative Code, Title 35: Environmental Protection, Subtitle B: Air Pollution, Chapter I: Pollution Control Board, Subchapter c: Emissions Standards and Limitations for Stationary Sources.

(A) Part 218: Organic Material Emission Standards and Limitations for the Chicago Area, Subpart V; Air Oxidation Processes, Sections 218.520 Emission Limitations for Air Oxidation Processes, 218.522 Savings Clause, 218.523 Compliance, 218.524 Determination of Applicability, and 218.525 Emission Limitations for Air Oxidation Processes (Renumbered) at 18 Ill. Reg. 16972, effective November 15, 1994.

(B) Part 219: Organic Material Emissions Standards and Limitations for the Metro-East Area, Subpart V; Air Oxidation Processes, Sections 219.520 Emission Limitations for Air Oxidation Processes, 219.522 Savings Clause, 219.523 Compliance, 219.524 Determination of Applicability, and 219.525 Emission Limitations for Air Oxidation Processes (Renumbered) at 18 Ill. Reg. 17001, effective November 15, 1994.

(115) On May 5, 1995, and May 26, 1995, the State submitted an amended coating rule which consisted of a tightened applicability cut-off level for wood furniture coating operations to the Ozone Control Plan for the Chicago and Metro-East St. Louis areas.

(i) *Incorporation by reference.* Illinois Administrative Code, Title 35: Environmental Protection, Subtitle B: Air Pollution, Chapter I: Pollution Control Board, Subchapter c: Emissions Standards and Limitations for Stationary Sources.

(A) Part 218: Organic Material Emission Standards and Limitations for the Chicago Area, Subpart F; Coating Operations, Sections 218.208 Exemptions from Emission Limitations, Subsection (b), amended at 19 Ill. Reg. 6848, effective May 9, 1995.

(B) Part 219: Organic Material Emissions Standards and Limitations for the Metro-East Area, Subpart F; Coating Operations, Section 219.208 Exemptions from Emission Limitations, Subsection (b), amended at 19 Ill. Reg. 6958, effective May 9, 1995.

(116) On May 5, 1995, and May 26, 1995, the State submitted a rule for automotive/transportation and business machine plastic parts coating operations, which consisted of new volatile organic compound emission limitations to the Ozone Control Plan for the Chicago and Metro-East St. Louis areas.

(i) *Incorporation by reference.* Illinois Administrative Code, Title 35: Environmental Protection, Subtitle B: Air Pollution, Chapter I: Pollution Control Board, Subchapter c: Emissions Standards and Limitations for Stationary Sources.

(A) Part 211: Definitions and General Provisions, Subpart B; Definitions, Sections 211.660 Automotive/Transportation Plastic Parts, 211.670 Baked Coatings, 211.820 Business Machine Plastic Parts, 211.1880 Electromagnetic Interference/Radio Frequency Interference Shielding Coatings, 211.1900 Electrostatic Prep Coat, 211.2360 Flexible Coatings, 211.2630 Gloss Reducers, 211.4055 Non-Flexible Coating, 211.4740 Plastic Part, 211.5480 Reflective Argent Coating, 211.5600 Resist Coat, 211.6060 Soft Coat, 211.6140 Specialty Coatings, 211.6400 Stencil Coat, 211.6580 Texture Coat, and 211.6880 Vacuum Metallizing, amended at 19 Ill. 6823, effective May 9, 1995.

(B) Part 218: Organic Material Emission Standards and Limitations for the Chicago Area, Subpart F; Coating Operations, Sections 218.204 Emission Limitations, Subsection (n) Plastic Parts Coating: Automotive/Transportation and (o) Plastic Parts Coating: Business Machine, 218.205 Daily-Weighted Average Limitations, Subsection (g), and 218.207 Alternative

Emission Limitations, Subsection (i), amended at 19 Ill. 6848, effective May 9, 1995.

(C) Part 219: Organic Material Emissions Standards and Limitations for the Metro-East Area, Subpart F; Coating Operations, Section 219.204 Emission Limitations, Subsection (m) Plastic Parts Coating: Automotive/Transportation and (n) Plastic Parts Coating: Business Machine, 219.205 Daily-Weighted Average Limitations, Subsection (f), and 219.207 Alternative Emission Limitations, Subsection (h), amended at 19 Ill. Reg. 6958, effective May 9, 1995.

(117) On May 31, 1995, the State submitted amended lithographic printing rules which consisted of revised definitions, and revisions to the Ozone Control Plan for the Chicago and Metro-East St. Louis areas.

(i) *Incorporation by reference.*

Illinois Administrative Code, Title 35: Environmental Protection, Subtitle B: Air Pollution, Chapter I: Pollution Control Board, Subchapter c: Emissions Standards and Limitations for Stationary Sources.

(A) Part 211: Definitions and General Provisions, Subpart B: Definitions, Sections 211.474 Alcohol, 211.560 As-Applied Fountain Solution, 211.2850 Heatset Web Offset Lithographic Printing Line, 211.4065 Non-Heatset, 211.5980 Sheet-Fed added at 19 Ill. Reg. 6823, effective May 9, 1995.

(B) Part 218: Organic Material Emission Standards and Limitations for the Chicago Area, Subpart H; Printing and Publishing, Sections 218.405 Lithographic Printing: Applicability, 218.406 Provisions Applying to Heatset Web Offset Lithographic Printing Prior to March 15, 1996, 218.407 Emissions Limitations and Control Requirements for Lithographic Printing Lines On and After March 15, 1996, 218.408 Compliance Schedule for Lithographic Printing on and After March 15, 1996, 218.409 Testing for Lithographic Printing On and After March 15, 1996, 218.410 Monitoring Requirements for Lithographic Printing, 218.411 Recordkeeping and Reporting for Lithographic Printing added at 19 Ill. Reg. 6848, effective May 9, 1995.

(C) Part 219: Organic Material Emissions Standards and Limitations for the Metro-East Area, Subpart H; Printing and Publishing, Sections 219.405 Lithographic Printing: Applicability, 219.406 Provisions Applying to Heatset Web Offset Lithographic Printing Prior to March 15, 1996, 219.407 Emissions Limitations and Control Requirements for Lithographic Printing Lines On and After March 15, 1996, 219.408 Compliance Schedule for Lithographic Printing on and After March 15, 1996, 219.409 Testing for Lithographic Printing On and After March 15, 1996, 219.410 Monitoring Requirements for Lithographic Printing, 219.411 Recordkeeping and Reporting for Lithographic Printing added at 19 Ill. Reg. 6848, effective May 9, 1995.

(118) On October 24, 1994, the State submitted a site-specific revision to the State Implementation Plan establishing lubricant selection and temperature control requirements for Alumax Incorporated, Morris, Illinois facility's hot and cold aluminum rolling mills, as part of the Ozone Control Plan for the Chicago area.

(i) *Incorporation by reference.* September 1, 1994, Opinion and Order of the Illinois Pollution Control Board AS 92–13, effective September 1, 1994.

(119) On May 5, 1995, and May 26, 1995, the State submitted a revised rule tightening volatile organic compound emission limitations for certain surface coating operations in the Chicago and Metro-East St. Louis areas.

(i) *Incorporation by reference.* Illinois Administrative Code, Title 35: Environmental Protection, Subtitle B: Air Pollution, Chapter I: Pollution Control Board, Subchapter c: Emissions Standards and Limitations for Stationary Sources.

(A) Part 218: Organic Material Emission Standards and Limitations for the Chicago Area, Subpart F; Coating Operations, Sections 218.204 Emission Limitations, 218.205 Daily-Weighted Average Limitations, 218.207 Alternative Emission Limitations, 218.208 Exemptions From Emission Limitations, 218.210 Compliance Schedule, 218.212 Cross-line Averaging to Establish Compliance for Coating Lines, 218.213 Recordkeeping and Reporting for Cross-line Averaging Participating

Coating Lines, 218.214 Changing Compliance Methods, 218 Appendix H Baseline VOM Content Limitations for Subpart F, Section 218.212 Cross-Line Averaging, amended at 19 Ill. 6848, effective May 9, 1995.

(B) Part 219: Organic Material Emissions Standards and Limitations for the Metro-East Area, Subpart F; Coating Operations, Sections 219.204 Emission Limitations, 219.205 Daily-Weighted Average Limitations, 219.207 Alternative Emission Limitations, 219.208 Exemptions From Emission Limitations, 219.210 Compliance Schedule, 219.212 Cross-line Averaging to Establish Compliance for Coating Lines, 219.213 Recordkeeping and Reporting for Cross-line Averaging Participating Coating Lines, 219.214 Changing Compliance Methods, 219 Appendix H Baseline VOM Content Limitations for Subpart F, Section 219.212 Cross-line Averaging, amended at 19 Ill. Reg. 6958, effective May 9, 1995.

(120) On May 5, 1995, and May 31, 1995, the State of Illinois submitted a rule for motor vehicle refinishing operations, which consisted of new volatile organic material (VOM) emission limitations to the Ozone Control Plan for the Chicago and Metro East St. Louis areas. This State Implementation Plan revision contains rules which establish VOM content limits for certain coatings and surface preparation products used in automobile and mobile equipment refinishing operations in the Chicago and Metro-East area, as well as requires these operations to meet certain equipment and work practice standards to further reduce VOM.

(i) *Incorporation by reference.* Illinois Administrative Code, Title 35: Environmental Protection, Subtitle B: Air Pollution, Chapter I: Pollution Control Board, Subchapter c: Emissions Standards and Limitations for Stationary Sources.

(A) Part 211: Definitions and General Provisions, Subpart B; Definitions, Sections 211.240 Adhesion Promoter, 211.495 Anti-Glare/Safety Coating, 211.685 Basecoat/Clearcoat System, 211.1875 Elastomeric Materials, 211.3915 Mobile Equipment, 211.3960 Motor Vehicles, 211.3965 Motor Vehicle Refinishing, 211.5010 Precoat, 211.5061 Pretreatment Wash Primer, 211.5080 Primer Sealer, 211.5090 Primer Surfacer Coat, 211.6145 Specialty Coatings for Motor Vehicles, 211.6540 Surface Preparation Materials, 211.6620 Three or Four Stage Coating System, 211.6695 Topcoat System, 211.6720 Touch-Up Coating, 211.6860 Uniform Finish Blender, amended at 19 Ill. 6823, effective May 9, 1995.

(B) Part 218: Organic Material Emission Standards and Limitations for the Chicago Area, Subpart HH; Motor Vehicle Refinishing, Sections 218.780 Emission Limitations, 218.782 Alternative Control Requirements, 218.784 Equipment Specifications, 218.786 Surface Preparation Materials, 218.787 Work Practices, 218.788 Testing, 218.789 Monitoring and Record keeping for Control Devices, 218.790 General Record keeping and Reporting, 218.791 Compliance Date, 218.792 Registration, amended at 19 Ill. 6848, effective May 9, 1995.

(C) Part 219: Organic Material Emissions Standards and Limitations for the Metro-East Area, Subpart HH; Motor Vehicle Refinishing, Sections 219.780 Emission Limitations, 219.782 Alternative Control Requirements, 219.784 Equipment Specifications, 219.786 Surface Preparation Materials, 219.787 Work Practices, 219.788 Testing, 219.789 Monitoring and Record keeping for Control Devices, 219.790 General Record keeping and Reporting, 219.791 Compliance Date 219.792 Registration, amended at 19 Ill. Reg. 6958, effective May 9, 1995.

(121) On May 23, 1995, and June 7, 1995, the State submitted volatile organic compound control regulations for incorporation in the Illinois State Implementation Plan for ozone.

(i) *Incorporation by reference.*

(A) Title 35: Environmental Protection, Subtitle B: Air Pollution, Chapter I: Pollution Control Board, Subchapter c: Emission Standards and Limitations for Stationary Sources, Part 211: Definitions and General Provisions, Subpart B: Definitions, Sections 211.695, 211.696, 211.5245, 211.6025. These sections were adopted on May 4, 1995, Amended at 19 Ill. Reg. 7344, and effective May 22, 1995.

(B) Title 35: Environmental Protection, Subtitle B: Air Pollution, Chapter I: Pollution Control Board, Subchapter c: Emission Standards and Limitations

for Stationary Sources, Part 218: Organic Material Emission Standards and Limitations for the Chicago Area, Subpart V: 218.500, 218.501, 218.502, 218.503, 218.504, 218.505, 218.506. These sections were adopted on May 4, 1995, Amended at 19 Ill. Reg. 7359, and effective May 22, 1995.

(C) Title 35: Environmental Protection, Subtitle B: Air Pollution, Chapter I: Pollution Control Board, Subchapter c: Emission Standards and Limitations for Stationary Sources, Part 219: Organic Material Emission Standards and Limitations for the Metro East Area, Subpart V: 219.500, 219.501, 219.502, 219.503, 219.504, 219.505, 219.506. These sections were adopted on May 4, 1995, Amended at 19 Ill. Reg. 7385, and effective May 22, 1995.

(122) On June 26, 1995, the Illinois Environmental Protection Agency (IEPA) submitted a State Implementation Plan (SIP) revision containing the 1992 enhancements to the Illinois vehicle inspection and maintenance (I/M) program. Such enhancements were originally developed to meet the I/M performance standard as called for in the United States Environmental Protection Agency's (USEPA's) proposed 'post-1987' I/M SIP policy and specified in the settlement agreement entered into by the parties in *Wisconsin* v. *Reilly*, Case No. 87–C–0395, E.D. Wis. The submittal includes authorizing legislation P.A. 86–1433, signed into law on September 12, 1990 and procedural rules published in the Illinois Register on June 26, 1992 at Volume 16, Issue #16.

(i) *Incorporation by reference.*

(A) 35 Illinois Administrative Code 276; Sections 276.101, 276.102, 276.204, 276.206, 276.301, 276.303, 276.304, 276.307, 276.308, 276.309, 276.310, 276.311, 276.401, 276.402, 276.701, 276.702, and 276.703 amended or added at 16 Ill. Reg. 10230, effective June 15, 1992.

(ii) Other material.

(A) Public Act 86–1433 adopted by the Illinois General Assembly on June 29, 1990, signed into law by Governor Edgar on September 12, 1990 effective September 12, 1990 (Sections 2,3, and 4) and January 1, 1991 (Section 1). (B) June 26, 1995 letter and attachments from the IEPA's Bureau of Air Chief to the USEPA's Regional Air and Radiation Division Director submitting Illinois' revision to the ozone SIP.

(123) On May 5, 1995, May 26, 1995, and May 31, 1995, the State of Illinois submitted miscellaneous revisions to its Volatile Organic Material (VOM) Reasonably Available Control Technology (RACT) rules contained in 35 Illinois Administrative Code Part 218: Organic Material Emission Standards and Limitations for the Chicago Area, and Part 219: Organic Material Emission Standards and Limitations for the Metro East Area. These amendments clarify certain applicability provisions, control requirements, and compliance dates contained within these regulations. Also included in these amendments is an exemption for certain polyethylene foam packaging operations from VOM RACT requirements.

(i) *Incorporation by reference.* Illinois Administrative Code, Title 35: Environmental Protection, Subtitle B: Air Pollution, Chapter I: Pollution Control Board, Subchapter c: Emission Standards and Limitations for Stationary Sources.

(A) Part 218: Organic Material Emission Standards and Limitations for the Chicago Area, Subpart A: General Provisions, Section 218.106; Subpart T: Pharmaceutical Manufacturing, Section 218.480; Subpart DD: Aerosol Can Filling, Section 218.686; Subpart RR: Miscellaneous Organic Chemical Process, Section 218.966; Subpart TT: Other Emission Units, Section 218.980. Amended at 19 Ill. Reg. 6848; effective May 9, 1995.

(B) Part 219: Organic Material Emission Standards and Limitations for the Metro East Area, Subpart T: Pharmaceutical Manufacturing, Section 219.480; Subpart TT: Other Emission Units, Section 219.980. Amended at 19 Ill. Reg. 6958, effective May 9, 1995.

(124) The state of Illinois requested a revision to the Illinois State Implementation Plan (SIP). This revision is for the purpose of establishing and implementing a Clean-Fuel Fleet Program in the Chicago ozone nonattainment area, which includes Cook, DuPage, Grundy (Aux Sable and Goose Lake townships only), Kane, Kendall (Oswego township only), Lake, McHenry, and Will counties, to satisfy the federal requirements for a Clean

Fuel Fleet Program to be part of the SIP for Illinois.

(i) *Incorporation by reference.*

(A) 35 Illinois Administrative Code 241; Sections 241.101, 241.102, 241.103, 241.104, 241.110, 241.111, 241.112, 241.113, 241.114, 241.115, 241.130, 241.131, 241.140, 241.141, 241.142, 241. Appendix A, 241. Appendix B adopted in R95–12 at 19 Ill. Reg. 13265, effective September 11, 1995.

(ii) Other material.

(A) September 29, 1995 letter and attachments from the Illinois Environmental Protection Agency's Bureau of Air Chief to the USEPA's Regional Air and Radiation Division Director submitting Illinois' revision to the ozone SIP.

(125) On November 14, 1995 the State submitted requested revisions to the Illinois State Implementation Plan in the form of revisions to the definitions of Organic Material and Organic Materials, Organic Solvent, Petroleum Liquid and Volatile Organic Material (VOM) or Volatile Organic Compound (VOC) intended to exempt acetone from regulation as a VOC.

(i) *Incorporation by reference.* Illinois Administrative Code, Title 35: Environmental Protection, Subtitle B: Air Pollution, Chapter I: Pollution Control Board, Subchapter c: Emission Standards and Limitations for Stationary Sources, Part 211: Definitions and General Provisions, Subpart B: Definitions, Section 211.4250 Organic Material and Organic Materials, Section 211.4260 Organic Solvent, Section 211.4610 Petroleum Liquid, Section 211.7150 Volatile Organic Material (VOM) or Volatile Organic Compounds (VOC). Amended at 19 Ill. Reg. 15176, effective October 19, 1995.

(126) On November 15, 1995 the State submitted a requested revision to the Illinois State Implementation Plan in the form of a revision to the definition Volatile Organic Material (VOM) or Volatile Organic Compound (VOC) intended to exempt parachlorobenzotrifluoride and cyclic, branched or linear completely methylated siloxanes from the definition of VOM or VOC and thereby, from regulation as a VOC.

(i) *Incorporation by reference.* Illinois Administrative Code, Title 35: Environmental Protection, Subtitle B: Air Pollution, Chapter I: Pollution Control Board, Subchapter c: Emission Standards and Limitations for Stationary Sources, Part 211: Definitions and General Provisions, Subpart B: Definitions, Section 211.7150 Volatile Organic Material (VOM) or Volatile Organic Compounds (VOC). Amended at 19 Ill. Reg. 11066, effective July 12, 1995.

(127) On October 21, 1993, and May 26, 1995, Illinois submitted volatile organic compound control regulations for incorporation in the Illinois State Implementation Plan for ozone.

(i) *Incorporation by reference.*

(A) Illinois Administrative Code Title 35: Environmental Protection, Subtitle B: Air Pollution, Chapter I: Pollution Control Board, Subchapter c: Emissions Standards and Limitations for Stationary Sources, Part 219: Organic Material Emissions Standards and Limitations for Metro East Area, Subpart PP: 219.920, 219.923, 219.927, 219.928; Subpart QQ: 219.940, 219.943, 219.947, 219.948; Subpart RR: 219.960, 219.963, 219.967, 219.968; Subpart TT: 219.980, 219.983, 219.987, 219.988; and Subpart UU. These Subparts were adopted on September 9, 1993, Amended at 17 Ill. Reg. 16918, effective September 27, 1993.

(B) Illinois Administrative Code Title 35: Environmental Protection, Subtitle B: Air Pollution, Chapter I: Pollution Control Board, Subchapter c: Emissions Standards and Limitations for Stationary Sources, Part 219: Organic Material Emissions Standards and Limitations for Metro East Area, Subpart PP: 219.926; Subpart QQ: 219.946; Subpart RR: 219.966; and Subpart TT: 219.986. These Subparts were adopted on April 20, 1995, Amended at 19 Ill. Reg. 6958, effective May 9, 1995.

(128) On November 30, 1994, the State submitted volatile organic compound control regulations for incorporation in the Illinois State Implementation Plan for ozone.

(i) *Incorporation by reference.*

(A) Title 35: Environmental Protection, Subtitle B: Air Pollution, Chapter I: Pollution Control Board, Subchapter c: Emission Standards and Limitations for Stationary Sources, Part 211: Definitions and General Provisions, Subpart B: Definitions, Sections 211.2300, 211.3695. These sections were adopted on October 20, 1994, Amended at 18 Ill.

Reg. 16929, and effective November 15, 1994.

(B) Title 35: Environmental Protection, Subtitle B: Air Pollution, Chapter I: Pollution Control Board, Subchapter c: Emission Standards and Limitations for Stationary Sources, Part 218: Organic Material Emission Standards and Limitations for the Chicago Area, Subpart B: 218.119, 218.120, 218.125, 218.127, 218.128, 218.129. These sections were adopted on October 20, 1994, Amended at 18 Ill. Reg. 16950, and effective November 15, 1994.

(C) Title 35: Environmental Protection, Subtitle B: Air Pollution, Chapter I: Pollution Control Board, Subchapter c: Emission Standards and Limitations for Stationary Sources, Part 219: Organic Material Emission Standards and Limitations for the Metro East Area, Subpart B: 219.119, 219.120, 219.125, 219.127, 219.128, 219.129. These sections were adopted on October 20, 1994, Amended at 18 Ill. Reg. 16980, and effective November 15, 1994.

(129) [Reserved]

(130) On June 29, 1995, the State of Illinois submitted a revision to the State Implementation Plan (SIP) for the implementation of an enhanced motor vehicle inspection and maintenance (I/M) program in the Chicago and East St. Louis ozone nonattainment areas. This revision included the Vehicle Emissions Inspection Law of 1995 (625 ILCS 5/13B), P.A. 88–533, effective January 18, 1995; I/M regulations (R94–19 and R94–20) adopted on December 1, 1994, by the Illinois Pollution Control Board; February 29, 1996, Request-For-Proposals; April 22, 1996, letter of commitment; plus additional support documentation including modeling demonstration.

(i) *Incorporation by reference.*

(A) Vehicle Emissions Inspection Law of 1995 (625 ILCS 5/13B), Public Act 88–533, signed into law by Governor Edgar on January 18, 1995 effective January 18, 1995.

(B) 35 Illinois Administrative Code 240; Sections 240.101, 240.102, 240.104, 240.105, 240.106, 240.107, 240.124, 240.125, 240.151, 240.152, 240.153, 240.161, 240.162, 240.163, 240.164, 240.171, 240.Table A, 240.Table B amended or added in R94–19 at 18 Ill. Reg. 18228, effective December 14, 1994.

(C) 35 Illinois Administrative Code 240; Sections 240.172, 240.173 amended in R94–20 at 18 Ill. Reg. 18013, effective December 12, 1994.

(ii) Additional materials.

(A) February 29, 1996, Request-For-Proposals submitted on April 22, 1996.

(B) April 22, 1996, letter of commitment and attachments from IEPA's Bureau of Air Chief to the USEPA's Regional Air and Radiation Division Director.

(131) On January 10, 1996, the State of Illinois submitted a site-specific State Implementation Plan (SIP) revision request for ozone, which extends the required deadline for the Rexam Medical Packaging Inc. facility in Mundelein, Lake County, Illinois (Rexam), to comply with 35 Illinois Administrative Code, part 218, subpart H, as it applies to its Inline Press Number No.105, Inline Press No. 111, Offline 32-inch Press, Offline 36-inch Press, and Offline 42-inch press. The compliance date is extended from March 15, 1995, until June 15, 1996, or upon submittal of the ''certificate of compliance'' required under section 218.404 of subpart H, whichever occurs first. The variance includes a compliance plan requiring the installation and use of a catalytic oxidizer to control emissions from Inline Press No. 105, Inline Press No. 111, Offline 32-inch Press, and Offline 42-inch Press. The Offline 36-inch Press is required to convert to water-based ink, or be controlled by the oxidizer if the press is not converted by March 1, 1996. The variance is contingent upon certain compliance milestone conditions.

(i) *Incorporation by reference.*

(A) Illinois Pollution Control Board Final Opinion and Order, PCB 95–99, adopted on October 19, 1995, and effective March 15, 1995. Certification of Acceptance dated November 29, 1996, by Rexam.

(132) On January 8, 1996, Illinois submitted a site-specific revision to the State Implementation Plan establishing lubricant selection and temperature control requirements for the hot and cold aluminum operations at Reynolds Metals Company's McCook Sheet and Plate Plant in McCook, Illinois (in Cook County), as part of the

Ozone Control Plan for the Chicago area.

(i) *Incorporation by reference.* September 21, 1995, Opinion and Order of the Illinois Pollution Control Board AS 91–8, effective September 21, 1995.

(133) On July 23, 1996, the Illinois Environmental Protection Agency submitted a site-specific State Implementation Plan revision request for the Chase Products Company's Broadview (Cook County), Illinois facility located at 19th Street and Gardner Road, as part of the Ozone Control Plan for the Chicago area. The resulting revision revises the control requirements codified at 35 Illinois Administrative Code Part 218 Subpart DD Section 218.686 as they apply to the Chase Products Company's Broadview facility.

(i) *Incorporation by reference.* May 16, 1996, Opinion and Order of the Illinois Pollution Control Board AS 94–4, effective May 16, 1996.

(134) On May 5, 1995, and May 26, 1995, the State of Illinois submitted a State Implementation Plan revision request to the United States Environmental Protection Agency for reactor processes and distillation operation processes in the Synthetic Organic Chemical Manufacturing Industry as part of the State's control measures for Volatile Organic Material (VOM) emissions for the Chicago and Metro-East (East St. Louis) areas. VOM, as defined by the State of Illinois, is identical to ''volatile organic compounds'' (VOC), as defined by EPA. This plan was submitted to meet the Clean Air Act requirement for States to adopt Reasonably Available Control Technology rules for sources that are covered by Control Techniques Guideline documents. The EPA approves the State Implementation Plan revision request as it applies to Stepan Company's Millsdale Facility.

(i) *Incorporation by reference.* Illinois Administrative Code, Title 35: Environmental Protection, Subtitle B: Air Pollution, Chapter I: Pollution Control Board, Subchapter c: Emissions Standards and Limitations for Stationary Sources.

(A) Part 211: Definitions and General Provisions, Subpart B; Definitions, 211.980 Chemical Manufacturing Process Unit, 211.1780 Distillation Unit, 211.2365 Flexible Operation Unit, 211.5065 Primary Product.

(B) Part 218: Organic Material Emission Standards and Limitations for the Chicago Area, Subpart Q: Synthetic Organic Chemical and Polymer Manufacturing Plant, Sections 218.431 Applicability, 218.432 Control Requirements, 218.433 Performance and Testing Requirements, 218.434 Monitoring Requirements, 218.435 Recordkeeping and Reporting Requirements, 218.436 Compliance Date, 218 Appendix G, TRE Index Measurement for SOCMI Reactors and Distillation Units, amended at 19 Ill. Reg. 6848, effective May 9, 1995.

(135) On January 23, 1996, Illinois submitted a site-specific revision to the State Implementation Plan which relaxes the volatile organic material (VOM) content limit for fabricated product adhesive operations at Solar Corporation's Libertyville, Illinois facility from 3.5 pounds VOM per gallon to 5.75 pounds VOM per gallon.

(i) Incorporation by reference. July 20, 1995, Opinion and Order of the Illinois Pollution Control Board, AS 94–2, effective July 20, 1995.

(136) On January 9, 1997, Illinois submitted a site-specific revision to the State Implementation Plan which grants a temporary variance from certain automotive plastic parts coating volatile organic material requirements at Solar Corporation's Libertyville, Illinois facility.

(*i*) *Incorporation by reference.* September 5, 1996, Opinion and Order of the Illinois Pollution Control Board, PCB 96–239, effective September 13, 1996. Certificate of Acceptance signed September 13, 1996.

(137) Approval—On April 25, 1997, the Illinois Environmental Protection Agency submitted a revision to the State Implementation Plan for general conformity rules. The general conformity rules enable the State of Illinois to implement the general conformity requirements in the nonattainment or maintenance areas at the State or local level in accordance with 40 CFR part 93, subpart B—Determining Conformity of General Federal Actions to State or Federal Implementation Plans.

(i) *Incorporation by reference.*

(A) Illinois Administrative Code, Title 35: Environmental Protection, Subtitle B: Air Pollution, Chapter 2: Environmental Protection Agency, Part 255 General Conformity: Criteria and Procedures. Adopted at 21 Ill. Reg. effective March 6, 1997.

(138) On May 5, 1995, and May 26, 1995, the State of Illinois submitted State Implementation Plan (SIP) revision requests for reactor processes and distillation operation processes in the Synthetic Organic Chemical Manufacturing Industry as part of the State's control measures for Volatile Organic Material emissions for the Metro-East (East St. Louis) area. This State Implementation Plan revision request is approved as it applies to Monsanto Chemical Group's Sauget Facility.

(i) *Incorporation by reference.* Illinois Administrative Code, Title 35: Environmental Protection, Subtitle B: Air Pollution, Chapter I: Pollution Control Board, Subchapter c: Emissions Standards and Limitations for Stationary Sources.

(A) Part 211: Definitions and General Provisions, Subpart B; Definitions, 211.980 Chemical Manufacturing Process Unit, 211.1780 Distillation Unit, 211.2365 Flexible Operation Unit, 211.5065 Primary Product, amended at 19 Ill. Reg. 6823, effective May 9, 1995.

(B) Part 219: Organic Material Emission Standards and Limitations for the Metro East Area, Subpart Q: Synthetic Organic Chemical and Polymer Manufacturing Plant, Sections 219.431 Applicability, 219.432 Control Requirements, 219.433 Performance and Testing Requirements, 219.434 Monitoring Requirements, 219.435 Recordkeeping and Reporting Requirements, 219.436 Compliance Date, 219.Appendix G, TRE Index Measurement for SOCMI Reactors and Distillation Units, amended at 19 Ill. Reg. 6958, effective May 9, 1995.

(139) On September 8, 1997, the State of Illinois submitted tightened volatile organic material rules for cold cleaning degreasing operations in the Chicago and the Metro-East ozone nonattainment areas.

(i) *Incorporation by reference.* Illinois Administrative Code, Title 35: Environmental Protection, Subtitle B: Air Pollution, Chapter I: Pollution Control Board, Subchapter c: Emissions Standards and Limitations for Stationary Sources.

(A) Part 211: Definitions and General Provisions, Subpart B: Definitions, Section 211.1885, amended at 21 Ill. 7695, effective June 9, 1997.

(B) Part 218: Organic Material Emission Standards and Limitations for the Chicago Area, Subpart E: Solvent Cleaning, Section 218.182, amended at 21 Ill. 7708, effective June 9, 1997.

(C) Part 219: Organic Material Emissions Standards and Limitations for the Metro-East Area, Subpart E: Solvent Cleaning, Section 219.182, amended at 21 Ill. 7721, effective June 9, 1997.

(140) On March 5, 1998, the State of Illinois submitted amended rules for the control of volatile organic material emissions from wood furniture coating operations in the Chicago and Metro-East (East St. Louis) ozone nonattainment areas, as a requested revision to the ozone State Implementation Plan. This plan was submitted to meet the Clean Air Act requirement for States to adopt Reasonably Available Control Technology rules for sources that are covered by Control Techniques Guideline documents.

(i) *Incorporation by reference.* Illinois Administrative Code, Title 35: Environmental Protection, Subtitle B: Air Pollution, Chapter I: Pollution Control Board, Subchapter c: Emissions Standards and Limitations for Stationary Sources.

(A) Part 211: Definitions and General Provisions, Subpart B; Definitions, 211.1467 Continuous Coater, 211.1520 Conventional Air Spray, 211.6420 Strippable Spray Booth Coating, 211.7200 Washoff Operations, amended at 22 Ill. Reg. 3497, effective February 2, 1998.

(B) Part 218: Organic Material Emission Standards and Limitations for the Chicago Area, Subpart F: Coating Operations 218.204 Emission Limitations, 218.205 Daily-weighted Average Limitations, 218.210 Compliance Schedule, 218.211 Recordkeeping and Reporting, 218.215 Wood Furniture Coating Averaging Approach, 218.216 Wood Furniture Coating Add-On Control Use, 218.217 Wood Furniture Coating Work Practice Standards, amended at 22 Ill. Reg. 3556, effective February 2, 1998.

(C) Part 219: Organic Material Emission Standards and Limitations for the Metro East Area, Subpart F: Coating Operations 219.204 Emission Limitations, 219.205 Daily-weighted Average Limitations, 219.210 Compliance Schedule, 219.211 Recordkeeping and Reporting, 219.215 Wood Furniture Coating Averaging Approach, 219.216 Wood Furniture Coating Add-On Control Use, 219.217 Wood Furniture Coating Work Practice Standards, amended at 22 Ill. Reg. 3517, effective February 2, 1998.

(141) On November 14, 1995, May 9, 1996, June 14, 1996, and February 3, 1997, October 16, 1997, and October 21, 1997, the State of Illinois submitted State Implementation Plan (SIP) revision requests to meet commitments related to the conditional approval of Illinois' May 15, 1992, SIP submittal for the Lake Calumet (SE Chicago), McCook, and Granite City, Illinois, Particulate Matter (PM) nonattainment areas. The EPA is approving the portion of the SIP revision request that applies to the Granite City area. The SIP revision request corrects, for the Granite City PM nonattainment area, all of the deficiencies of the May 15, 1992, submittal.

(i) *Incorporation by reference.* (A) Illinois Administrative Code Title 35: Environmental Protection, Subtitle B: Air Pollution, Chapter 1: Pollution Control Board, Subchapter c: Emission Standards and Limitations for Stationary Sources, Part 212: Visible and Particulate Matter Emissions, Subpart A: General, Sections 212.107, 212.108, 212.109, 212.110; Subpart L: Particulate Matter from Process Emission Sources, Section 212.324; Subpart N: Food Manufacturing, Section 212.362; Subpart Q: Stone, Clay, Glass and Concrete Manufacturing, Section 212.425; Subpart R: Primary and Fabricated Metal Products and Machinery Manufacture, Sections 212.446, 212.458; Subpart S: Agriculture, Section 212.464. Adopted at 20 *Illinois Register* 7605, effective May 22, 1996.

(B) Joint Construction and Operating Permit: Application Number 95010005, Issued on October 21, 1997, to Granite City Division of National Steel Corporation.

(142) On May 5, 1995, and May 26, 1995, the State of Illinois submitted State Implementation Plan revision requests for reactor processes and distillation operations in the Synthetic Organic Chemical Manufacturing Industry as part of the State's control measures for Volatile Organic Material emissions for the Chicago and Metro-East (East St. Louis) areas. This plan was submitted to meet the Clean Air Act requirement for States to adopt Reasonably Available Control Technology rules for sources that are covered by Control Techniques Guideline documents.

(i) *Incorporation by reference.* Illinois Administrative Code, Title 35: Environmental Protection, Subtitle B: Air Pollution, Chapter I: Pollution Control Board, Subchapter c: Emissions Standards and Limitations for Stationary Sources.

(A) Part 211: Definitions and General Provisions, Subpart B; Definitions, 211.980 Chemical Manufacturing Process Unit, 211.1780 Distillation Unit, 211.2365 Flexible Operation Unit, 211.5065 Primary Product, amended at 19 Ill. Reg. 6823, effective May 9, 1995.

(B) Part 218: Organic Material Emission Standards and Limitations for the Chicago Area, Subpart Q: Synthetic Organic Chemical and Polymer Manufacturing Plant, Sections 218.431 Applicability, 218.432 Control Requirements, 218.433 Performance and Testing Requirements, 218.434 Monitoring Requirements, 218.435 Recordkeeping and Reporting Requirements, 218.436 Compliance Date, 218.Appendix G, TRE Index Measurement for SOCMI Reactors and Distillation Units, amended at 19 Ill. Reg. 6848, effective May 9, 1995.

(C) Part 219: Organic Material Emission Standards and Limitations for the Metro East Area, Subpart Q: Synthetic Organic Chemical and Polymer Manufacturing Plant, Sections 219.431 Applicability, 219.432 Control Requirements, 219.433 Performance and Testing Requirements, 219.434 Monitoring Requirements, 219.435 Recordkeeping and Reporting Requirements, 219.436 Compliance Date, 219.Appendix G, TRE Index Measurement for SOCMI Reactors and Distillation Units, amended at 19 Ill. Reg. 6958, effective May 9, 1995.

(143) [Reserved]

(144) On September 3, 1997, the Illinois Environmental Protection Agency submitted a temporary, site specific

State Implementation Plan revision request for the D.B. Hess Company, Incorporated's (DB Hess) lithographic printing operations located in Woodstock (McHenry County), Illinois. This variance took the form of a March 20, 1997, Opinion and Order of the Illinois Pollution Control Board issued in PCB 96–194 (Variance—Air). The variance which will expire on March 30, 1999, grants DB Hess a variance from 35 Illinois Administrative Code Sections 218.407(a)(1)(C),(D),(E) and 218.411(b)(1), (2)and (3) for heatset web offset presses 3, 4, and 5 which are located at the Woodstock (McHenry County), Illinois facility.

(i) Incorporation by reference.

(A) March 20, 1997, Opinion and Order of the Illinois Pollution Control Board in PCB 96–194 (Variance—Air) which was effective on March 20, 1997 and expires on March 30, 1999.

(ii) The variance is subject to the following conditions (the dates specified indicate the latest start dates of compliance periods terminating on March 30, 1999, when presses 3, 4, and 5 must be replaced by complying presses or must be brought into compliance with the rules from which DB Hess seeks the variance):

(A) On or before March 20, 1997, the combined actual volatile organic material (VOM) emissions from all of the presses in the Woodstock plant shall not exceed 18 tons per year or 1.5 tons per month.

(B) On or before March 20, 1997, DB Hess shall use only cleaning solutions with VOM concentrations less than or equal to 30 percent by weight.

(C) On or before March 20, 1997, DB Hess shall use cleaning solutions on presses 3, 4, and 5 that have a VOM composite partial vapor pressure of less than 10 millimeters (mm) of Mercury (Hg) at 20 degrees Celsius. These cleaning solutions must comply with the requirements of 35 IAC 218.407(a)(4).

(D) On or before March 20, 1997, DB Hess shall store and dispose of all cleaning towels in closed containers.

(E) On or before May 5, 1997, DB Hess shall monitor presses 3, 4, and 5 pursuant to 35 IAC 218.410 (b), (c), and (e).

(F) On or before May 5, 1997, DB Hess shall use fountain solutions on presses 3, 4, and 5 that are less than 5 percent VOM by volume, as applied, and which contain no alcohol.

(G) On or before May 5, 1997, DB Hess shall prepare and maintain records pursuant to 35 IAC 218.411 (b), (c), and (d) for presses 3, 4, and 5 and must show compliance with the requirements of 35 IAC 218.407(a)(1) (C), (D), and (E) and with the requirements of 35 IAC 218.411(b) (1), (2), and (3) for these presses.

(H) On or before May 5, 1997, DB Hess shall submit quarterly reports to the Illinois Environmental Protection Agency's (IEPA's) Compliance and Systems Management Section demonstrating compliance with the terms of the Illinois Pollution Control Board Order.

(I) On or before March 30, 1998, DB Hess shall cease operation of press 3.

(J) On or before March 30, 1999, DB Hess shall either:

(*1*) Cease operation of presses 4 and 5, and notify the IEPA of such cessation; or

(*2*) Retrofit presses 4 and 5 or replace presses 4 and 5 in compliance with 35 IAC 218.407 (a)(1) (C), (D), and (E) and with 35 IAC 218.411(b) (1), (2), and(3). In this case:

(*i*) DB Hess must apply for and obtain necessary construction permits by March 30, 1998, or six months before retrofitting or replacing presses 4 and 5, whichever is earlier.

(*ii*) DB Hess must send monthly status reports, due the 15th day of each month, to the IEPA, covering the progress of the installation of the presses and control equipment and testing of the control equipment.

(K) On or before March 30, 1999, DB Hess shall cease operations at presses 3, 4, and 5 except for those presses for which it has obtained permits and installed controls, which have been tested and demonstrated to be in compliance with applicable rules.

(145) On September 16, 1998, the State of Illinois submitted amendments to Volatile Organic Material (VOM) rules affecting Illinois' ozone attainment area (the area of the State not including the Chicago and Metro-East ozone nonattainment areas). The amendments contain various deletions of obsolete provisions, changes of some word usage to comport Part 215 with other

Illinois VOM regulations, and the addition of certain exemptions from VOM coating requirements.

(i) Incorporation by reference.

Illinois Administrative Code, Title 35: Environmental Protection, Subtitle B: Air Pollution, Chapter I: Pollution Control Board, Subchapter c: Emissions Standards and Limitations for Stationary Sources.

(A) Part 215: Organic Material Emission Standards and Limitations; Subpart A: General Provisions, 215.104 Definitions, 215.109 Monitoring for Negligibly-Reactive Compounds; Subpart F: Coating Operations, 215.204 Emission Limitations for Manufacturing Plants, 215.205 Alternative Emission Limitations, 215.206 Exemptions from Emission Limitations, 215.207 Compliance by Aggregation of Emissions Units, 215.211 Compliance Dates and Geographical Areas, 215.212 Compliance Plan, and 215.214 Roadmaster Emissions Limitations (Repealed); Subpart Z: Dry Cleaners, 215.601 Perchloroethylene Dry Cleaners(Repealed), 215.602 Exemptions (Repealed), 215.603 Leaks (Repealed), 215.604 Compliance Dates and Geographical areas (Repealed), 215.605 Compliance Plan (Repealed), and 215.606 Exception to Compliance Plan (Repealed), amended at 22 Ill. Reg. 11427, effective June 19, 1998.

(146) On February 13, 1998, the Illinois Environmental Protection Agency (IEPA) submitted a revision to the Illinois State Implementation Plan (SIP). This revision amends certain sections of the Clean-Fuel Fleet Program (CFFP) in the Chicago ozone nonattainment area to reflect that fleet owners and operators will have an additional year to meet the purchase requirements of the CFFP. The amendment changes the first date by which owners or operators of fleets must submit annual reports to IEPA from November 1, 1998 to November 1, 1999. In addition, this revision corrects two credit values in the CFFP credit program.

(i) Incorporation by reference.

(A) 35 Illinois Administrative Code 241; Sections 241.113, 241.130, 241.140, 241.Appendix B.Table A, 241.Appendix B.Table D adopted in R95–12 at 19 Ill. Reg. 13265, effective September 11, 1995; amended in R98–8, at 21 Ill. Reg. 15767, effective November 25, 1997.

(ii) Other material.

(A) February 13, 1998, letter and attachments from the Illinois Environmental Protection Agency's Bureau of Air Chief to the United States Environmental Protection Agency's Regional Air and Radiation Division Director submitting Illinois' amendments to the Clean Fuel Fleet regulations as a revision to the ozone State Implementation Plan.

(147) On June 21, 1997, and December 9, 1998, the State of Illinois submitted regulations adopted by the Illinois Pollution Control Board and the Illinois Environmental Protection Agency and legislation adopted by the General Assembly and signed by the Governor related to Illinois' vehicle inspection and maintenance (I/M) program. The purpose of these submittals was to change the existing program from a basic I/M program to a fully enhanced I/M program. These changes modify the program in both the Chicago and Saint Louis (Illinois Portion) Ozone nonattainment areas.

(i) Incorporation by reference.

(A) Illinois Administrative Code, Title 35: Environmental Protection, Subtitle B: Air Pollution, Chapter I: Pollution Control Board, Subchapter k: Emission Standards and Limitations for Mobile sources, Part 240 Mobile Sources, Except for Section 240. Table C. Adopted at 22 *Ill. Reg.* 13723, effective July 13, 1998.

(B) Illinois Administrative Code, Title 35: Environmental Protection, Subtitle B: Air Pollution, Chapter I: Pollution Control Board, Subchapter k: Emission Standards and Limitations for Mobile sources, Part 240 Mobile Sources, Section 240. Table C. Corrected at 22 *Ill. Reg.* 21120, effective July 13, 1998.

(C) Illinois Administrative Code, Title 35: Environmental Protection, Subtitle B: Air Pollution, Chapter II: Environmental Protection Agency, Part 276 Procedures to be Followed in the Performance of Inspections of Motor Vehicle Emissions. Amended at 22 *Ill. Reg.* 18867, effective September 28, 1998.

(ii) Other materials.

(A) Transmittal letters dated June 21, 1997, and December 9, 1998.

(B) Public Act 90–475, effective August 17, 1997. This Act amends the Illinois Environmental Protection Act by changing Sections 3.32, 3.78, 21, and 22.15 and adding Sections 3.78a and 22.38.

(148) On October 13, 1998, the State of Illinois submitted a site-specific State Implementation Plan (SIP) revision affecting Volatile Organic Material controls at Central Can Company (CCC), located in Chicago, Illinois. The SIP revision allows CCC to apply can coating control rules to pail coating operations limited to certain conditions.

(i) Incorporation by reference. August 6, 1998, Opinion and Order of the Illinois Pollution Control Board, AS 94–18, effective July 1, 1991.

(149) On September 17, 1998, the Illinois Environmental Protection Agency submitted a site specific State Implementation Plan revision request for W.R. Grace and Company's facility, which manufactures container sealants, lubricant fluids, and concrete additives, and is located at 6050 West 51st Street in Chicago, Illinois (Cook County). This rule revision is contained in R98–16, the July 8, 1998, Opinion and Order of the Illinois Pollution Control Board, and consists of new Section 218.940(h), which exempts W.R. Grace's facility from the control requirements in 35 Illinois Administrative Code Part 218 Subpart QQ.

(i) Incorporation by reference.

Illinois Administrative Code Title 35: Environmental Protection, Subtitle B: Air Pollution, Chapter I: Pollution Control Board, Subchapter c: Emissions Standards and Limitations for Stationary Sources, Part 218 Organic Material Emission Standards and Limitations for the Chicago Area, Subpart QQ: Miscellaneous Formulation Manufacturing Processes, Section 218.940 Applicability, paragraph (h) which was amended in R98–16 at 22 Ill. Reg. 14282, effective July 16, 1998.

(150) On November 14, 1995, May 9, 1996, June 14, 1996, February 1, 1999, and May 19, 1999, the State of Illinois submitted State Implementation Plan (SIP) revision requests to meet commitments related to the conditional approval of Illinois' May 15, 1992, SIP submittal for the Lake Calumet (Southeast Chicago), McCook, and Granite City, Illinois, Particulate Matter (PM) nonattainment areas. The EPA is approving the SIP revision request as it applies to the Lake Calumet area. The SIP revision request corrects, for the Lake Calumet PM nonattainment area, all of the deficiencies of the May 15, 1992, submittal.

(i) Incorporation by reference.

(A) Illinois Administrative Code Title 35: Environmental Protection, Subtitle B: Air Pollution, Chapter I: Pollution Control Board, Subchapter c: Emission Standards and Limitations for Stationary Sources, Part 212: Visible and Particulate Matter Emissions, Subpart A: General, Section 212.113; Subpart E: Particulate Matter from Fuel Combustion Sources, Section 212.210; Subpart K: Fugitive Particulate Matter, Sections 212.302, 212.309, and 212.316. Adopted at 20 Illinois Register 7605, effective May 22, 1996.

(B) Federally Enforceable State Operating Permit—Special: Application Number 98120091, Issued on May 14, 1999, to LTV Steel Company, Inc.

(151) On July 23, 1998, the State of Illinois submitted a State Implementation Plan (SIP) revision that included certain "clean-up" amendments to the State's permitting rules.

(i) Incorporation by reference.

Illinois Administrative Code, Title 35: Environmental Protection, Subtitle B: Air Pollution, Chapter I: Pollution Control Board.

(A) Subchapter A: Permits and General Provisions, Part 201: Permits and General Provisions.

(1) Subpart D: Permit Applications and Review Process, Section 201.152 Contents of Application for Construction Permit, 201.153 Incomplete Applications (Repealed), Section 201.154 Signatures (Repealed), Section 201.155 Standards for Issuance (Repealed), Section 201.157 Contents of Application for Operating Permit, Section 201.158 Incomplete Applications, Section 201.159 Signatures, 201.160 Standards for Issuance, Section 201.162 Duration, Section 201.163 Joint Construction and Operating Permits, and Section 201.164 Design Criteria. Amended at 22 Ill. Reg. 11451, effective June 23, 1998.

(2) Subpart E: Special Provisions for Operating Permits for Certain Smaller Sources, Section 201.180 Applicability (Repealed), Section 201.181 Expiration and Renewal (Repealed), Section 201.187 Requirement for a Revised Permit (Repealed), Repealed at 22 Ill. Reg. 11451, effective June 23, 1998.

(3) Subpart F: CAAPP Permits, Section 201.207 Applicability, Amended at 22 Ill. Reg. 11451, effective June 23, 1998.

(152) On February 5, 1998, the Illinois Environmental Protection Agency submitted a requested revision to the Illinois State Implementation Plan. This revision provided additional exemptions from State of Illinois permit requirements codified by the State at Part 201 of Title 35 of the Illinois Administrative Code (35 IAC Part 201). The revision also added a definition of "Feed Mill" to Part 211 of 35 IAC (35 IAC Part 211).

(i) Incorporation by reference.

Illinois Administrative Code, Title 35: Environmental Protection, Subtitle B: Air Pollution, Chapter I: Pollution Control Board, Subchapter C: Emission Standards and Limitations for Stationary Sources.

(A) Part 211 Definitions and General Provisions, Subpart B: Definitions, Section 211.2285 Feed Mill. Added at 21 Ill. Reg. 7856, effective June 17, 1997.

(B) Part 201 Permits and General Conditions, Subpart C: Prohibitions, Section 201.146 Exemptions from State Permit Requirements. Amended at 21 Ill. Reg. 7878, effective June 17, 1997.

(153) On July 9, 1999, the State of Illinois submitted a site-specific State Implementation Plan (SIP) revision affecting Volatile Organic Material control requirements at Sun Chemical Corporation (Sun) in Northlake, Illinois. The SIP revision changes requirements for 17 resin storage tanks operated by Sun. Specifically, the SIP revision exempts the 17 tanks from the bottom or submerged fill pipe requirements, provided that no odor nuisance exists at the Sun Northlake facility, and that the vapor pressures of materials stored in the tanks remain less the 0.5 pounds per square inch absolute at 70 degrees Fahrenheit.

(i) Incorporation by reference.

May 20, 1999, Opinion and Order of the Illinois Pollution Control Board, AS 99–4, effective May 20, 1999.

(155) On May 21, 1999, the Illinois Environmental Protection Agency submitted a temporary, site-specific revision to the State Implementation Plan (SIP) for sulfur dioxide (SO_2) for the Central Illinois Light Company's E.D. Edwards Generating Station in Peoria County, Illinois (CILCO Edwards). The SIP revision took the form of an April 15, 1999, Opinion and Order of the Illinois Pollution Control Board (PCB 99–80, Variance-Air). In this Opinion and Order, the IPCB granted CILCO Edwards a variance from 35 Illinois Administrative Code 214.141, and provided for a relaxation in the fuel quality limit for one of the facility's three boilers, but added an overall fuel quality limit and retained an overall SO_2 emissions cap for the three CILCO Edwards boilers. The variance will expire on February 28, 2002, unless CILCO applies to Illinois for a permanent SIP revision.

(i) Incorporation by Reference

An April 15, 1999, Opinion and Order of the Illinois Pollution Control Board in PCB 99–80 (Variance-Air), granting a variance from 35 IAC 214.141 for Boiler No. 2 at the Central Illinois Light Company's E.D. Edwards Generating Station near Peoria, Illinois. The variance expires on February 28, 2002, unless CILCO applies to Illinois for a permanent SIP revision. If CILCO applies for a permanent SIP revision, and the IPCB allows CILCO Edwards' variance to continue unamended through July 31, 2003, as stated in the Opinion and Order, then federal approval of the variance will continue until EPA approves alternate SO_2 limits for CILCO Edwards, or until July 31, 2003, whichever is earlier.

(156) On May 8, 2001, the State submitted rules to control Oxides of Nitrogen emissions from electric generating units.

(i) Incorporation by reference. Title 35: Environmental Protection; Subtitle B: Air Pollution; Chapter I: Pollution Control Board; Subchapter C: Emission Standards and Limitations for Stationary Sources; Part 217 Nitrogen Oxides Emissions; Subpart V: Electric

Power Generation. Adopted at 25 *Ill. Reg.* 5914, effective April 17, 2001.

(157) On May 8, 2001, the Illinois Environmental Protection Agency submitted revisions to 35 Ill. Adm. Code 217, Subpart W: NO[x] Trading Program for Electrical Generating Units with a request that these rules be incorporated into the Illinois State Implementation Plan. On June 11, 2001, the Illinois EPA submitted Section 9.9(f) of the Illinois Environmental Protection Act as revised by Public Act 92–012 (formerly House Bill 1599) which was approved by both Houses of the Illinois General Assembly on June 7, 2001, approved by the Governor on June 22, 2001, and became effective on July 1, 2001. Section 9.9(f) requires a May 31, 2004 final compliance date for 35 Ill. Adm. Code 215, Subparts T, U and W. This compliance date replaces the compliance date contained in Section 217.756(d)(3).

(i) Incorporation by reference.

(A) Title 35: Environmental Protection, Subtitle B: Air Pollution, Chapter 1: Pollution Control Board, Subchapter c: Emission Standards and Limitations for Stationary Sources, Part 217 Nitrogen Oxides Emissions, Subpart W: NO[x] Trading Program for Electrical Generating Units except for 217.756(d)(3) which has been superseded by Section 9.9(f) of the Illinois Environmental Protection Act. Added at 25 Ill. Reg. 128, January 25, 2001, effective December 26, 2000.

(B) Section 9.9(f) of the Illinois Environmental Protection Act. Adopted by both Houses of the Illinois General Assembly as part of Public Act 92–0012 (previously House Bill 1599) on May 31, 2001, approved by the Governor of Illinois on June 22, 2001, effective July 1, 2001.

(158) On December 16, 1997, Bharat Mathur, Chief, Bureau of Air, Illinois Environmental Protection Agency, submitted rules for a cap and trade program regulating volatile organic compound emissions in the Chicago area. By letter dated August 23, 2001, the state requested that USEPA defer rulemaking on section 205.150(e), which exempts new and modified sources obtaining offsets under the trading program from the requirements for traditional, full year offsets.

(i) Incorporation by reference.

Illinois Administrative Code, Title 35, Subtitle B, Chapter I, subchapter b, Part 205, entitled Emissions Reduction Market System, adopted November 20, 1997, effective November 25, 1997, except section 205.150(e).

(159) On April 9, 2001, David Kolaz, Chief, Bureau of Air, Illinois Environmental Protection Agency, submitted rules regulating NO_X emissions from cement kilns. On May 1, 2001, Mr. Kolaz submitted rules regulating NO_X emissions from industrial boilers and turbines and requesting two minor revisions to the Illinois NO_X emissions budget. On June 18, 2001, Mr. Kolaz submitted a demonstration that Illinois' regulations were sufficient to assure that NO_X emissions in Illinois would be reduced to the level budgeted for the state by USEPA. On September 20, 2001, Mr. Kolaz sent a letter clarifying that Illinois' rules for industrial boilers and turbines require compliance on a unit-by-unit basis.

(i) Incorporation by reference.

(A) Illinois Administrative Code, Title 35, Subtitle B, Chapter I, subchapter c, Part 211, Definitions, sections 211.955, 211.960, 211.1120, 211.3483, 211.3485, 211.3487, 211.3780, 211.5015, and 211.5020, published at 25 Ill. Reg. 4582, effective March 15, 2001.

(B) Illinois Administrative Code, Title 35, Subtitle B, Chapter I, subchapter c, Part 217, Subpart A, Section 217.104, Incorporations by Reference, published at 25 Ill. Reg. 4597, effective March 15, 2001.

(C) Illinois Administrative Code, Title 35, Subtitle B, Chapter I, subchapter c, Part 217, Subpart T, Cement Kilns, sections 217.400, 217.400, 217.402, 217.404, 217.406, 217.408, and 217.410, published at 25 Ill. Reg. 4597, effective March 15, 2001.

(D) Illinois Administrative Code, Title 35, Subtitle B, Chapter I, subchapter c, Part 211, Sections 211.4067 and 211.6130, published at 25 Ill. Reg. 5900, effective April 17, 2001.

(E) Illinois Administrative Code, Title 35, Subtitle B, Chapter I, subchapter c, Part 217, Subpart U, NO_X Control and Trading Program for Specified NO_X Generating Units, sections 217.450, 217.452, 217.454, 217.456, 217.458, 217.460, 217.462, 217.464, 217.466, 217.468,

217.470, 217.472, 217.474, 217.476, 217.478, 217.480 and 217.482, published at 25 Ill. Reg. 5914, effective April 17, 2001.

(ii) Additional material.

(A) Letter dated June 18, 2001, from David Kolaz, Illinois Environmental Protection Agency, to Cheryl Newton, United States Environmental Protection Agency.

(B) Letter dated September 20, 2001, from David Kolaz, Illinois Environmental Protection Agency, to Bharat Mathur, United States Environmental Protection Agency.

(160) On March 21, 2001, Illinois submitted revisions to volatile organic compound rules for Formel Industries, Incorporated in Cook County, Illinois. The revisions consist of a January 18, 2001 Opinion and Order of the Illinois Pollution Control Board in the Matter of: Petition of Formel Industries, Inc. for an Adjusted Standard from 35 ILL. ADM. CODE 218.401(a),(b) and (c): AS 00–13 (Adjusted Standard Air). This Opinion and Order grants Formel Industries, Incorporated an adjusted standard to the Flexographic Printing Rule. The adjusted standard requirements include participation in a market-based emissions trading system, maintaining daily records, conducting trials of compliant inks, and reviewing alternate control technologies.

(i) Incorporation by reference.

Volatile organic compound emissions limits contained in a January 18, 2001 Opinion and Order of the Illinois Pollution Control Board in the Matter of: Petition of Formel Industries, Inc. for an Adjusted Standard from 35 ILL. ADM. CODE 218.401(a), (b) and (c): AS 00–13 (Adjusted Standard-Air). This Opinion and Order was adopted by the Illinois Pollution Control Board on January 18, 2001. It became effective under State law on January 18, 2001.

(161) On March 28, 2001, Illinois submitted revisions to volatile organic compound rules for Bema Film Systems, Incorporated in DuPage County, Illinois. The revisions consist of AS 00–11, an adjusted standard to the Flexographic Printing Rule, 35 IAC 218.401 (a), (b), and (c). The adjusted standard requirements include reducing the allotment baseline for the Illinois market-based emissions trading system, maintaining daily records, conducting trials of compliant inks, and reviewing alternate control technologies.

(i) Incorporation by reference.

AS 00–11, an adjusted standard from the Volatile Organic Compound emission limits for Bema Film Systems, Inc. contained in Illinois Administrative Code Title 35: Environmental Regulations for the State of Illinois, Subtitle B: Air Pollution, Chapter I: Pollution Control Board, Subchapter c: Emission Standards and Limitations for Stationary Sources, Part 218.401 (a), (b), and (c). Effective on January 18, 2001.

(ii) Other material.

(A) November 14, 2001, letter from Dennis A. Lawler, Manager, Division of Air Pollution Control, Illinois Environmental Protection Agency to Jay Bortzer, Chief, Regulation Development Section, Air and Radiation Division, USEPA, Region 5, indicating that the effective date of the adjusted standard for Bema Film Systems, Inc. AS 00–11, is January 18, 2001, the date that AS 00–11 was adopted by the Illinois Pollution Control Board.

(162) On March 28, 2001, Illinois submitted revisions to volatile organic compound rules for Vonco Products, Incorporated in Lake County, Illinois. The revisions consist of AS 00–12, an adjusted standard to the Flexographic Printing Rule, 35 IAC 218.401 (a), (b), and (c). The adjusted standard requirements include reducing the allotment baseline for the Illinois market-based emissions trading system, maintaining daily records, conducting trials of compliant inks, and reviewing alternate control technologies.

(i) Incorporation by reference.

AS 00–12, an adjusted standard from the Volatile Organic Compound emission limits applicable to Vonco Products, Inc. contained in Illinois Administrative Code Title 35: Environmental Regulations for the State of Illinois, Subtitle B: Air Pollution, Chapter I: Pollution Control Board, Subchapter c: Emission Standards and Limitations for Stationary Sources, Part 218.401 (a), (b), and (c). Effective on January 18, 2001.

(ii) Other material.

(A) November 14, 2001, letter from Dennis A. Lawler, Manager, Division of

Air Pollution Control, Illinois Environmental Protection Agency to Jay Bortzer, Chief, Regulation Development Section, Air and Radiation Division, USEPA, Region 5, indicating that the effective date of the adjusted standard for Vonco Products, Inc. AS 00–12, is January 18, 2001, the date that AS 00–12 was adopted by the Illinois Pollution Control Board.

(163) [Reserved]

(164) On October 9, 2001, the State of Illinois submitted new rules regarding emission tests.

(i) Incorporation by reference.

(A) New rules of 35 Ill. Admin. Code Part 283, including sections 283.110, 283.120, 283.130, 283.210, 283.220, 283.230, 283.240, and 283.250, effective September 11, 2000, published in the Illinois Register at 24 Ill. Reg. 14428.

(B) Revised section 283.120 of 35 Ill. Admin. Code, correcting two typographical errors, effective September 11, 2000, published in the Illinois Register at 25 Ill. Reg. 9657.

(165) On April 8, 1999, the Illinois Environmental Protection Agency submitted revisions to particulate matter control requirements for rural grain elevators in Illinois. The revised requirements exempt rural grain elevators from certain particulate matter control requirements.

(i) *Incorporation by reference.* Revised grain elevator provisions in Section 9(f) of the Illinois Environmental Protection Act. Adopted by both Houses of the Illinois General Assembly as Public Act 89–491 (previously Senate Bill 1633) on April 25, 1996, approved by the Governor of Illinois on May 23, 1996, effective June 21, 1996.

(166) On November 6, 2001, the State of Illinois submitted revisions to its emission reporting rules, restructuring these rules and adding hazardous air pollutant emission reporting for sources in Illinois' Emission Reduction Market System.

(i) Incorporation by reference.

(A) Revised rules of 35 Ill. Admin. Code Part 254, including new or amended sections 254.101, 254.102, 254.103, 254.120, 254.132, 254.134, 254.135, 254.136, 254.137, 254.138, 254.203, 254.204, 254.303, 254.306, and 254.501, effective July 17, 2001, retention of section 254.133, and the repeal of other previously approved sections of 35 Ill. Admin. Code 254. Amended or adopted at 25 Ill. Reg. 9856. Effective July 17, 2001.

(167) On August 31, 1998, Illinois submitted revisions to its major stationary sources construction and modification rules (NSR Rules) as a State Implementation Plan revision request. These revisions apply only in areas in Illinois that have been designated as being in serious or severe nonattainment with the national ambient air quality standards for ozone.

(i) Incorporation by reference. Illinois Administrative Code, Title 35: Environmental Protection, Subtitle B: Air Pollution, Chapter I: Pollution Control Board, Subchapter A: Permits and General Provisions, Part 203 Major Stationary Sources Construction and Modification, Subpart B: Major Stationary Sources in Nonattainment Areas, Section 203.206 Major Stationary Source and Section 203.207 Major Modification of a Source; and, Subpart C: Requirements for Major Stationary Sources in Nonattainment Areas, Section 203.301 Lowest Achievable Emissions Rate. Amended in R98–10 at 22 Ill. Reg. 5674, effective March 10, 1998.

(168) [Reserved]

(169) On June 20, 2003, Illinois submitted an Adjusted Standard for Ford Motor Company's Chicago Assembly Plant. This Adjusted Standard from 35 Ill.Adm. Code 218.986 replaces those requirements with the control requirements in the Illinois Pollution Control Board's November 21, 2002, Order.

(i) Incorporation by reference.

(A) The Illinois Pollution Control Board's November 21, 2002, Opinion and Order which granted the Ford Motor Company's Chicago Assembly Plant an adjusted standard (AS 02–3) from 35 Ill. ADM. Code 218.986. The requirements in 35 Ill. ADM. Code 218.986 have been replaced by the requirements in the Illinois Pollution Control Board's November 21, 2002, Order.

[37 FR 10862, May 31, 1972]

EDITORIAL NOTE: For FEDERAL REGISTER citations affecting § 52.720, see the List of CFR Sections Affected, which appears in the Finding Aids section of the printed volume and on GPO Access.

EFFECTIVE DATE NOTE 1: At 69 FR 29449, May 24, 2004, § 52.720 was amended by adding paragraph (c)(170), effective July 23, 2004. For

the convenience of the user, the added text follows:

§ 52.720 Identification of plan.

* * * * *

(c) * * *

(170) On May 28, 2003, Illinois submitted an amendment to its leather coating rules for the Horween Leather Company's Chicago leather manufacturing facility. This adds a test method in Section 218.112(a)(26) and a new Section 35 Ill. Adm. Code 218.929. These amendments were incorporated in the Illinois Pollution Control Board's February 20, 2003, Final Order R02–20.

(i) Incorporation by reference. Illinois Administrative Code Title 35: Environmental Protection, Subtitle B: Air Pollution, Chapter I: Pollution Control Board, Subchapter c: Emissions Standards and Limitations for Stationary Sources, Part 218 Organic Material Emission Standards and Limitations for the Chicago Area.

(A) Subpart A: General Provisions, Section 218.112 Incorporations by Reference, (a) American Society for Testing and Materials, 100 Barr Harbor Drive, West Conshohocken, PA 19428–9555, 26) ASTM D2099–00. Amended at 27 Ill. Reg. 7283, effective April 8, 2003.

(B) Subpart PP: Miscellaneous Fabricated Product Manufacturing Processes, Section 218.929 Cementable and Dress or Performance Shoe Leather. Added at 27 Ill. Reg. 7283, effective April 8, 2003.

EFFECTIVE DATE NOTE 2: At 69 FR 30227, May 27, 2004, § 52.720 was amended by adding paragraph (c)(172), effective July 26, 2004. For the convenience of the user, the added text follows:

§ 52.720 Identification of plan.

* * * * *

(c) * * *

(172) On September 19, 2003, Illinois submitted a site-specific revision to the State Implementation Plan which relaxes the volatile organic material (VOM) content limit for the coating operations at Louis Berkman Company, d/b/a/ the Swenson Spreader Company's Lindenwood, Ogle County, Illinois facility from 3.5 pounds VOM per gallon to a monthly average of 4.75 pounds VOM per gallon until May 7, 2008.

(i) Incorporation by reference. Order contained in a May 7, 1998, Opinion and Order of the Illinois Pollution Control Board, AS 97–5, effective May 7, 1998.

EFFECTIVE DATE NOTE: 3. At 69 FR 36023, June 28, 2004, § 52.720 was amended by adding new paragraph (c)(168), effective Aug. 27, 2004. For the convenience of the user, the added text is set forth as follows:

§ 52.720 Identification of plan.

* * * * *

(c) * * *

(168) On October 31, 2003, the Illinois Environmental Protection Agency submitted revisions to the Illinois State Implementation Plan for ozone. The submittal revises the definition for volatile organic material (VOM) or volatile organic compound (VOC) contained in 35 Ill. Adm. Code 211.7150 to incorporate an exemption for perchloroethylene (tetrachloroethylene); 3,3-dichloro-1,1,1,2,2-pentafluoropropane (HCFC–225ca); 1,3-dichloro-1,1,2,2,3-pentafluoropropane (HCFC–225cb); decafluoropentane (HFC 43–10mee); difluoromethane (HFC–32); ethylfluoride (HFC–161); 1,1,1,3,3,3-hexafluoropropane (HFC–236fa); 1,1,2,2,3-pentafluoropropane (HFC–245ca); 1,1,2,3,3-pentafluoropropane (HFC–245ea); 1,1,1,2,3-pentafluoropropane (HFC–245eb); 1,1,1,3,3-pentafluoropropane (HFC–245fa); 1,1,1,2,3,3-hexafluoropropane (HFC–236ea); 1,1,1,3,3-pentafluorobutane (HFC–365mfc); chlorofluoromethane (HCFC–31); 1,2-dichloro-1,1,2-trifluoroethane (HCFC–123a); 1-chloro-1-fluoroethane (HCFC–151a); 1,1,1,2,2,3,3,4,4-nonafluoro-4-methoxybutane ($C_4F_9OCH_3$); 2-(difluoromethoxymethyl)-1,1,1,2,3,3,3-heptafluoropropane ($(CF_3)_2CFCF_2OCH_3$); 1-ethoxy-1,1,2,2,3,3,4,4,4-nonafluorobutane ($C_4F_9OC_2H_5$); 2-(ethoxydifluoromethyl)-1,1,1,2,3,3,3-heptafluoropropane ($(CF_3)_2CFCF_2OC_2H_5$); and methyl acetate from the definition of VOM or VOC and thereby, from regulation as ozone precursors.

(i) Incorporation by reference.

(A) Illinois Administrative Code Title 35: Environmental Protection, Subtitle B: Air Pollution, Chapter 1: Pollution Control Board, Subchapter c: Emission Standards and Limitations for Stationary Sources, Part 211: Definitions and General Provisions, Subpart B: Definitions, Section 211.7150 Volatile Organic Material (VOM) or Volatile Organic Compound (VOC), amended at 22 Illinois Register 11405, effective June 22, 1998.

§ 52.721 Classification of regions.

The Illinois plan was evaluated on the basis of the following classifications:

Air quality control region	Pollutant				
	Particulate matter	Sulfur oxides	Nitrogen dioxide	Carbon monoxide	Ozone
Burlington-Keokuk Interstate	I	I	III	III	III
East Central Illinois Intrastate	III	II	III	III	III
Metropolitan Chicago Interstate (Indiana-Illinois)	I	I	I	I	I
Metropolitan Dubuque Interstate	I	III	III	III	III
Metropolitan Quad Cities Interstate	I	III	III	III	III
Metropolitan St. Louis Interstate (Missouri-Illinois)	I	I	III	I	I
North Central Illinois Intrastate	II	IA	III	III	III
Paducah (Kentucky)-Cairo (Illinois) Interstate	I	II	III	III	III
Rockford (Illinois)-Janesville-Beloit (Wisconsin) Interstate	II	III	III	III	III
Southeast Illinois Intrastate	III	II	III	III	III
West Central Illinois Intrastate	I	IA	III	III	III

[37 FR 10862, May 31, 1972, as amended at 39 FR 16346, May 8, 1974; 45 FR 11493, Feb. 21, 1980]

§ 52.722 Approval status.

(a) With the exceptions set forth in this subpart, the Administrator approved Illinois' plan for the attainment and maintenance of the National Ambient Air Quality Standards under section 110 of the Clean Air Act. Furthermore, the Administrator finds the plan satisfies all requirements of part D, title I of the Clean Air Act as amended in 1977, except as noted below. In addition, continued satisfaction of the requirements of part D for the ozone portion of the SIP depends on the adoption and submittal of RACT requirements by July 1, 1980, for the sources covered by CTGs between January 1978 and January 1979 and adoption and submittal by each subsequent January of additional RACT requirements for sources covered by CTGs issued by the previous January.

(b) The Administrator finds that the transportation control plans for the East St. Louis and Chicago areas submitted on December 3, 1982, satisfy the related requirements of part D, title I of the Clean Air Act, as amended in 1977.

(c) The Administrator finds that the carbon monoxide control strategy submitted on May 4, 1983, satisfies all requirements of part D, title I of the Clean Air Act, as amended in 1977, except for section 172(b)(6).

[55 FR 40661, Oct. 4, 1990]

§ 52.723 [Reserved]

§ 52.724 Control strategy: Sulfur dioxide.

(a) Part D—Conditional Approval—The Illinois plan is approved provided that the following condition is satisfied:

(1) The plan includes a reanalysis of the Pekin, Illinois area, a submittal of the analysis results to USEPA, the proposal of any additional regulations to the Illinois Pollution Control Board necessary to insure attainment and maintenance of the sulfur dioxide standard, and the promulgation of any necessary regulations. The State must complete the reanalysis, submit the results to USEPA and submit any necessary, additional regulations to the Illinois Pollution Control Board by September 30, 1980. Any necessary regulation must be finally promulgated by the State and submitted to USEPA by September 30, 1981.

(2) Extension of Condition—USEPA approves the date of July 1, 1984 for submitting the draft sulfur dioxide rule revisions and supporting documentation as required in (a)(1) for Peoria, Hollis and Groveland Townships in Illinois. The State must complete final rule adoption as expeditiously as possible but no later than December 31, 1985.

(b) Part D—Disapproval—USEPA disapproves Rules 204(c)(1)(B), Rule 204(c)(1)(C), Rule 204(e)(1) and Rule 204(e)(2) for those sources for which these rules represent a relaxation of the federally enforceable State Implementation Plan. Rule 204(c)(1)(B), Rule

204(c)(1)(C), Rule 204(e)(1) and Rule 204(e)(2) are approved as not representing relaxations of the State Implementation Plan for the following sources:

SOURCES OF 10 MILLION BTU PER HOUR OR MORE NOT INCREASING ALLOWABLE SULFUR DIOXIDE EMISSIONS AS A RESULT OF RECORD RULES 204(c) AND 204(e) BECAUSE NEW ALLOWABLE EMISSIONS RATE IS SAME AS OR LESS THAN OLD ALLOWABLE RATE POUNDS PER HOUR (POUNDS PER MILLION BTU)

County	Name	Emissions formerly allowable [1]	Emissions now allowable without new permit application [2]
Boone	Chrysler	1,760 (4.4)	1,760 (4.4)
Champaign	Chanute Air Base	1,317 (3.0)	1,317 (3.0)
Crawford	CIPS	8,242 (5.1)	8,242 (5.1)
Douglas	USI Chemicals	8,022 (5.3)	8,022 (5.3)
Fulton	Freeman Coal	22.2 (1.2)	22.2 (1.2)
La Salle	Del Monte	296 (3.9)	296 (3.9)
Massac	EEI Joppa	36,865 (3.6)	36,865 (3.6)
Montgomery	CIPS	55,555 (5.8)	55,555 (5.8)
Morgan	.....do	24,000 (6.0)	20,800 (5.2)
Putnam	Illinois Power	17,051 (5.8)	17,051 (5.8)
Randolph	.....do [3]	81,339 (4.6)	81,339 (4.6)
Rock Island	International Harvester	1,643 (4.35)	1,643 (4.35)
Williamson	Marion Correctional	396 (5.7)	396 (5.7)

[1] 6.0 lbs/MMBTU of existing coal fired capacity or total 204(e)(2) emissions less actual oil fired and NSPS emissions, whichever is lower.
[2] Maximum allowable emissions for existing coal fired capacity according to revised rules 204(c) and 204(e) consolidated, usually equally equalling total emissions as given by 204(e)(2) less actual oil fired NSPS emissions. (In the one case wherein the new allowable limit is less than that given by 204(e)(2) the allowable emissions were determined by 204(e)(1) with which the source is required to comply.)
[3] Source is in compliance per 204(e)(3).

CIPS=Central Illinois Public Service.
EEI=Electric Energy Incorporated.

This disapproval does not in and of itself result in the growth restrictions of section 110(a)(2)(1).

(c) Disapproval—USEPA disapproves Rule 204(e)(4) as not being adequate to protect the NAAQS. This disapproval does not in and of itself result in the growth restrictions of section 110(a)(2)(I).

(d) Disapproval—USEPA disapproves Rule 204(f)(1)(D) as completely deregulating SO_2 emissions from existing processes without providing an assessment of the ambient air quality impact or a showing that increasing the allowable emissions from these sources will not cause or contribute to violations of the NAAQS or PSD increments. This disapproval does not in and of itself result in the growth restrictions of section 110(a)(2)(I).

(e) Disapproval—USEPA disapproves Rule 204(h) for those sources for which USEPA has disapproved rules 204(c) and 204(e). This disapproval does not in and of itself result in the growth restrictions of section 110(a)(2)(I).

(f) Approval—USEPA approves rule 204(e)(3) for those sources able to show that the proposed emission rate will not cause or contribute to a violation of the NAAQS. The State must submit these emission limitations, along with the technical support to USEPA for approval.

(g) Part D—Approval—The State plan for Alton Township, Madison County, which consists of a federally Enforceable State Operating Permit controlling sulfur dioxide emissions from the boilers and reheat furnaces at Laclede Steel, which was submitted on November 18, 1993, is approved.

(h) Approval—On November 10, 1994, the Illinois Environmental Protection Agency submitted a sulfur dioxide redesignation request and maintenance plan for Peoria and Hollis Townships in Peoria County and Groveland Township in Tazewell County to redesignate the townships to attainment for sulfur dioxide. The redesignation request and maintenance plan meet the redesignation requirements in section

107(d)(3)(d) of the Clean Air Act (Act) as amended in 1990.

[45 FR 62806, 62809, Sept. 22, 1980, as amended at 50 FR 5250, Feb. 7, 1985; 59 FR 18753, Apr. 20, 1994; 60 FR 17001, Apr. 4, 1995]

§ 52.725 Control strategy: Particulates.

(a) [Reserved]

(b) Part D—Disapproval. (1) U.S. EPA disapproves the provisions of Rule 203(f) which allow the use of an equivalent method without review and approval of that method. Any source subject to Rule 203(f) which chooses to use an equivalent method must have that equivalent method submitted to U.S. EPA and approved as a SIP revision.

(2) U.S. EPA disapproves the following portions of Rule 203(d)(5) which regulate the control of particulate matter from specific sources within the iron and steel industry: Rule 205(d)(5)(B)(ii), Rule 205(d)(5)(B)(iii), Rule 205(d)(5)(D), and Rule 205(d)(5)(K).

(3) USEPA disapproves a proposed SIP revision submitted by the State on May 12, 1982, in the form of a May 18, 1981 Consent Decree (Civil Action 81–3009) to which USEPA, Illinois Environmental Protection Agency and National Steel Corporation are parties and a draft Alternative Control Strategy Permit. This submission was modified by the State, September 30, 1982, with the submission of a separate document embodying the elements of the Alternative Control Strategy. This separate document was intended to become an enforceable part of the SIP.

(c) Approval—On September 28, 1988, the State of Illinois submitted a committal SIP for particulate matter with an aerodynamic diameter equal to or less than 10 micrometers (PM_{10}) for the Illinois Group II areas of concern in DuPage, Will, Rock Island, Macon, Randolph, and St. Clair Counties. The committal SIP contains all the requirements identified in the July 1, 1987, promulgation of the SIP requirements for PM_{10} at 52 FR 24681.

(d) Approval—On June 2, 1995, and January 9, 1996, the State of Illinois submitted a maintenance plan for the particulate matter nonattainment portion of LaSalle County, and requested that it be redesignated to attainment of the National Ambient Air Quality Standard for particulate matter. The redesignation request and maintenance plan satisfy all applicable requirements of the Clean Air Act.

(e) Approval—On March 19, 1996, and October 15, 1996, Illinois submitted requests to redesignate the Granite City Particulate Matter (PM) nonattainment area to attainment status for the PM National Ambient Air Quality Standards (NAAQS), as well as a maintenance plan for the Granite City area to ensure continued attainment of the NAAQS. The redesignation request and maintenance plan satisfy all applicable requirements of the Clean Air Act.

(f) On November 14, 1995, May 9, 1996, and June 14, 1996, the State of Illinois submitted State Implementation Plan (SIP) revision requests to meet commitments related to the conditional approval of Illinois' May 15, 1992, SIP submittal for the Lake Calumet (SE Chicago), McCook, and Granite City, Illinois, Particulate Matter (PM) nonattainment areas. The EPA is approving the SIP revision request as it applies to the McCook PM nonattainment area. For the McCook PM nonattainment area, all of the deficiencies of the May 15, 1992, submittal have been corrected.

(g) Approval—On May 5, 1992, November 14, 1995, May 9, 1996, June 14, 1996, February 3, 1997, October 16, 1997, October 21, 1997, February 1, 1999, and May 19, 1999, Illinois submitted SIP revision requests to meet the Part D particulate matter (PM) nonattainment plan requirements for the Lake Calumet, Granite City and McCook moderate PM nonattainment areas. The submittals include federally enforceable construction permit, application number 93040047, issued on January 11, 1999, to Acme Steel Company. The part D plans for these areas are approved.

[45 FR 11493, Feb. 21, 1980, as amended at 46 FR 44185, Sept. 3, 1981; 47 FR 26620, June 21, 1982; 48 FR 45246, Oct. 4, 1983; 49 FR 1905, Jan. 16, 1984; 55 FR 20266, May 16, 1990; 61 FR 41345, Aug. 8, 1996; 63 FR 11846, Mar. 11, 1998; 63 FR 47434, Sept. 8, 1998; 64 FR 37851, July 14, 1999]

§ 52.726 Control strategy: Ozone.

(a) Part D—Conditional Approval—The Illinois plan is approved provided that the following conditions are satisfied:

(1) [Reserved]

(2) The State conducts a study to demonstrate that the 75 percent overall control efficiency requirement in Rule 205(n) represents RACT, submits the results of the study to USEPA, and submits any necessary regulations representing RACT to the Illinois Pollution Control Board. The State must comply with these conditions by February 28, 1981. Any necessary regulations must be finally promulgated by the State and submitted to USEPA by February 28, 1982.

(3) Extension of Condition—USEPA approves the date of July 31, 1984 for the State of Illinois to satisfy the condition of approval to the ozone State Implementation Plan listed in paragraph (a)(2) of this section.

(b) Disapproval—USEPA disapproves the compliance schedule in Rule 205(j) as it applies to loading rack controls for all emission sources subject to Rule 205(b)(1), as approved by USEPA on May 31, 1972 which were required to be in compliance by December 31, 1973. This disapproval does not in and of itself result in the growth restrictions of section 110(a)(2)(I).

(c) *Negative Declarations—Stationary Source Categories.* The State of Illinois has certified to the satisfaction of USEPA that no sources are located in the nonattainment areas of the State which are covered by the following Control Technique Guidelines:

(1) High density polyethylene and polypropylene manufacturers.

(2) Vegetable oil processing sources with volatile organic compound emissions equal to or greater than 100 tons per year.

(d) Part D Disapproval—The Administrator finds that Illinois' ozone plan for Cook, Lake, DuPage and Kane Counties, which was required to be submitted by July 1, 1982, does not satisfy all the requirements of Part D, Title I of the Clean Air Act and, thus, is disapproved. No major new stationary source, of major modification of a stationary source, or volatile organic compounds may be constructed in Cook, Lake, DuPage or Kane Counties, unless the construction permit application is complete on or before November 16, 1988. This disapproval does not affect USEPA's approval (or conditional approval) of individual parts of Illinois' ozone plan, and they remain approved.

(e) Disapproval—The Administrator finds that the following State rules have not been demonstrated to be consistent with the reasonably available control technology requirements of section 172 of the Clean Air Act, as amended in 1977, and thus, are disapproved: subpart F, section 215.204(c); subpart F, section 215.206(b); subpart F, section 215.204(j)(4); subpart I; subpart AA; subpart PP; subpart QQ; subpart RR; subpart A, section 215.102; subpart T; subpart H, section 215.245; subpart F, section 215.207; and subpart A, section 215.107, all of title 35; Environmental Protection; subtitle B: Air Pollution; Chapter 1: Pollution Control Board of the Illinois Administrative Code (June 1989).

(f) On September 30, 1992, the State submitted rules regulating volatile organic compound emissions from gasoline dispensing facilities' motor vehicle fuel operations (Stage II vapor recovery rules) in the Chicago ozone nonattainment area. The Illinois Environmental Protection Agency Bureau of Air must as part of the program conduct inspections of facilities subject to this rule to ensure compliance with the applicable rules. These inspections will be conducted on an annual basis or an alternative schedule as approved in the USEPA Fiscal Year Inspection Program Plan.

(g) Approval—The Administrator approves the incorporation of the photochemical assessment ambient monitoring system submitted by Illinois on November 4, 1993, into the Illinois State Implementation Plan. This submittal satisfies 40 CFR 58.20(f) which requires the State to provide for the establishment and maintenance of photochemical assessment monitoring stations (PAMS) by November 12, 1993.

(h) Approval—On November 12, 1993, the Illinois Environmental Protection Agency submitted an ozone redesignation request and maintenance plan for Jersey County ozone nonattainment area and requested that Jersey County be redesignated to attainment for ozone. The redesignation request and maintenance plan meet the redesignation requirements in section

107(d)(3)(d) of the Act. The redesignation meets the Federal requirements of section 182(a)(1) of the Clean Air Act as a revision to the Illinois ozone State Implementation Plan for Jersey County.

(i) The base year (1990) ozone emission inventory requirement of section 182(a)(1) of the Clean Air Act, as amended in 1990, has been satisfied for the following Illinois ozone nonattainment areas: the Chicago nonattainment area—Cook, DuPage, Kane, Lake, Will and McHenry Counties, Aux Sable and Gooselake Townships in Grundy County, and Oswego Township in Kendall County; the Metro-East St. Louis nonattainment area—Madison, Monroe, and St. Clair Counties; and Jersey County.

(j) Approval—On July 14, 1994, Illinois submitted two of three elements required by section 182(d)(1)(A) of the Clean Air Amendments of 1990 to be incorporated as part of the vehicle miles traveled (VMT) State Implementation Plan intended to offset any growth in emissions from a growth in vehicle miles traveled. These elements are the offsetting of growth in emissions attributable to growth in VMT which was due November 15, 1992, and, transportation control measures (TCMs) required as part of Illinois' 15 percent reasonable further progress (RFP) plan which was due November 15, 1993. Illinois satisfied the first requirement by projecting emissions from mobile sources and demonstrating that no increase in emissions would take place. Illinois satisfied the second requirement by submitting the TCMs listed in Table 1 which are now approved into the Illinois SIP.

TABLE 1

Project type	Location description	Completion status	SIP credit VOC tpd
RS/SIG MOD	Madison Street (Western Ave. to Halsted Street)	Done	0.015400
SIG COORD	Willow Road (Landwer Road to Shermer)	Awarded	0.052000
SIG COORD	Rand Road (Baldwin Road to Kennicott)	Awarded	0.052000
SIG COORD	Northwest Hwy (Potter Road to Cumberland Avenue)	Awarded	0.030000
SIGS/SIG COORD	159th Street (US 45 to 76th Ave & at 91st Avenue)	Awarded	0.030000
SIG COORD	Harlem Ave. (71st St. to 92nd)	Awarded	0.052000
SIG COORD	Harlem Ave. (99th Street to 135th St.)	Awarded	0.052000
RECONST/SIGS/LTS	Archer Ave. (88th Ave to 65th St.)	Awarded	0.030000
SIG COORD	Ogden Ave. (N. Aurora Road to Naper Boulevard)	Awarded	0.030000
SIG COORD	North Ave. (Tyler to Kautz)	Awarded	0.030000
SIG COORD	Higgens Road (Il 72 at Il 31)	Awarded	0.030000
SIG COORD	Sheridan Road (Il 173 to Wadsworth)	Awarded	0.030000
SIG COORD	Lagrange Road (Belmont to Lake St.)	Awarded	0.030000
SIG COORD	Dundee Road (Sanders Road to Skokie Valley Road)	Awarded	0.052000
SIG COORD	Dundee Road (Buffalo Grove Road to Il 21)	Awarded	0.030000
INT IMP/SIG COORD	Golf Road (E. River Road to Washington Ave.)	Awarded	0.052000
SIG COORD	Golf Road (Barrington to Roselle Road)	Awarded	0.030000
SIG COORD	Higgins Road (Barrington to Roselle Road)	Awarded	0.030000
SIG COORD	Joe Orr Road (Vincennes Ave. to Il 1)	Awarded	0.030000

TABLE 1

Project type	Location description	Completion status	SIP credit
SIG COORD/RS	Crawford Ave. (93rd Street to 127th Street)	Awarded	0.052000
SIG COORD	IL 53 (Briarcliff to South of I–55)	Done	0.030000
SIG COORD	Ogden Ave. (Oakwood Avenue to Fairview Avenue)	Awarded	0.019000
SIG COORD	US 14 (Rohlwing Road to Wilke Road)	Awarded	0.030000
SIG COORD	US 30 (At Cottage Grove, Ellis St)	Awarded	0.030000
SIG COORD	IL 53 (Modonough to Mills)	Done	0.030000
SIG CONN	Ogden Ave. (IL 43 to 31st Street)	Awarded	0.013000
SIG CONN	US 12 (Long Grove—Hicks Road)	Awarded	0.055200
SIG CONN	North Ave. (Oak Park to Ridgeland)	Awarded	0.007000
SIG CONN	Roosevelt Road (Westchester Bl—IL 43)	Awarded	0.137000
SIG CONN	Depster St (Keeler to Crawford Ave.)	Awarded	0.010000
SIG CONN	Arlington Hgts Rd. (Thomas to Central)	Awarded	0.044000
SIG CONN	Palatine Rd. (Shoenbeck to Wolf Roads)	Awarded	0.042500
SIG CONN	Western Ave. (US 30—Lakewood)	Awarded	0.018900
RS/INT IMP	North Ave. (I–290 to IL 43)	Awarded	0.056100
INT IMP	Plum Grove Rd. (At Higgins Road)	Awarded	0.010700
INT IMP	St Street (At Illinois)	Awarded	0.002700

TABLE 1—Continued

Project type	Location description	Completion status	SIP credit
RS/SIG MOD/INT IMP	Illinois/Grand (Kingsbury to Lake Shore Drive)	Done	0.004200
ADD TURN LANES	York Rd. (Industrial to Grand Ave.)	Done	0.003800
SERVICE IMP	SW Route Lane Service	Scheduled	0.005516
SIG INTCONN	Washington Street	Scheduled	0.030370
SIG INTCONN	IL 59	Scheduled	0.068650
ENGR	Citywide—Naperville		0.086230
SIG INTCONN	Washington Street	Scheduled	0.008230
SIG INTCONN	Lewis Ave. (Yorkhousse to ILL 173)	Scheduled	0.034600
SIG INTCONN	Schaumberg Rd. (Barrington to Martingale)	Scheduled	0.078080
Vanpool Program (94 vehicles)	Region-Wide Suburban	Done	0.134000
Transp. Center	North West Cook County	Done	0.032835
Transp. Center	Sears T.F.	Done	0.005805
Station	Clark/Lake	Done	0.010000
Station Recon	18 Th Douglas Line	Done	0.001500
Station Recon	Linden	Done	0.001500
Station Recon	Cottage Grove	Done	0.001300
Com. Pkg	Lisle	Done	0.010177
Com. Pkg	Jefferson Park	Done	0.000110
Com. Pkg	Edison Park	Done	0.003614
Com. Pkg	Palatine	Done	0.004336
Com. Pkg	Central Street	Done	0.000519
Com. Pkg	Palatine	Done	0.004890
Com. Pkg	Crystal Lake	Done	0.034948
Com. Pkg	137Th/Riverdale	Done	0.004565
Com. Pkg	River Forest	Done	0.000289
Com. Pkg	115Th/Kensington	Done	0.002795
Com. Pkg	119Th St	Done	0.004483
Com. Pkg	Wilmette	Done	0.001587
Com. Pkg	111Th St	Done	0.000507
Com. Pkg	Edison Park	Done	0.002371
Com. Pkg	Joliet	Done	0.003967
Com. Pkg	Hanover Park	Done	0.021799
Com. Pkg	Bartlett	Done	0.008911
Com. Pkg	Chicago Ridge	Done	0.002159
Com. Pkg	103 Rd St	Done	0.000675
Com. Pkg	Elmhurst	Done	0.003857
Com. Pkg	Bartlett	Done	0.009326
Com. Pkg	Morton Grove	Done	0.001444
Com. Pkg	Palatine	Done	0.003598
Com. Pkg	Harvard	Done	0.006299
Com. Pkg	Willow Springs	Done	0.001200
Com. Pkg	Edgebrook	Done	0.002240
Com. Pkg	Bensenville	Done	0.002010
Com. Pkg	Hanover Park	Done	0.015020
Com. Pkg	Midlothian	Done	0.002570
Com. Pkg	Route 59	Done	0.025020
Com. Pkg	Lake Forest (West)	Done	0.013780
Com. Pkg	Lombard	Done	.....
Com. Pkg	Elmhurst	Done	0.001010
Com. Pkg	Woodstock	Done	0.019000
Com. Pkg	University Park	Done	0.019950
Com. Pkg	Grayslake	Done	0.006210
Com. Pkg	Oak Forest	Done	0.004260
Com. Pkg	91 St St.	Done	0.003380
Com. Pkg	Lockport	Done	0.007360
Com. Pkg	Ravenswood	Done	0.000130
Com. Pkg	Hickory Creek	Done	0.060140
Com. Pkg	Cary	Done	0.005980
Com. Pkg	Blue Island	Done	0.019430
Com. Pkg	Lemont	Done	0.016200
Com. Pkg	Itasca	Done	0.003860
Com. Pkg	Maywood	Done	0.000600
Com. Pkg	Ivanhoe	Done	0.001960
Com. Pkg	Ravinia	Done	0.003210
Com. Pkg	Fox River Grove	Done	0.025170
Com. Pkg	Medinah	Done	0.012250
Com. Pkg	Hanover Park	Done	0.011840
Com. Pkg	Worth	Done	0.003530
Com. Pkg	Roselle	Done	0.007710
Com. Pkg	Crystal Lake	Done	0.015050
Com. Pkg	Gresham	Done	0.000300

TABLE 1—Continued

Project type	Location description	Completion status	SIP credit
Com. Pkg	Barrington	Done	0.002420
Rideshare Prog.	Regionwide	Scheduled	0.040000
Rapid Transit Service	Midway Airport	Done	0.220000
Transp. Center	Deerfield Lake-Cook	Done	0.004160
Station Recon	Davis St.	Done	0.004000
Station Recon	Addison	Done	0.004000
Station Recon	King Drive	Done	0.003000
Station Recon	Washington/Wells	Done	0.003000
Com. Pkg	Cary	Done	0.027910
Com. Pkg	Morton Grove	Done	0.002460
Com. Pkg	80th Ave.	Scheduled	0.043200
Com. Pkg	Round Lake	Done	0.015150
Com. Pkg	Grayslake	Done	0.009170
Com. Pkg	Ingleside	Scheduled	0.005430
Com. Pkg	Schamburg	Scheduled	0.042090
Com. Pkg	Oak Forest	Scheduled	0.004680
Com. Pkg	Lake Cook	Scheduled	0.026390
Com. Pkg	Grayslake	Scheduled	0.035290

(k) Approval—EPA is approving the section 182(f) oxides of nitrogen (NO_X) reasonably available control technology (RACT), new source review (NSR), vehicle inspection/maintenance (I/M), and general conformity exemptions for the Illinois portion of the Chicago-Gary-Lake County severe ozone nonattainment area as requested by the States of Illinois, Indiana, Michigan, and Wisconsin in a July 13, 1994 submittal. This approval does not cover the exemption of NO_X transportation conformity requirements of section 176(c) for this area. Approval of these exemptions is contingent on the results of the final ozone attainment demonstration expected to be submitted in mid-1997. The approval will be modified if the final attainment demonstration demonstrates that NO_X emission controls are needed in the nonattainment area to attain the ozone standard in the Lake Michigan Ozone Study modeling domain.

(l) Approval—The United States Environmental Protection Agency is approving under section 182(b)(1) of the Clean Air Act the exemption of the Chicago severe, ozone nonattainment area from the build/no-build and less than-1990 interim transportation conformity oxides of nitrogen requirements as requested by the State of Illinois in a June 20, 1995 submittal. In light of the modeling completed thus far and considering the importance of the OTAG process and attainment plan modeling efforts, USEPA grants this NO_X waiver on a contingent basis. As the OTAG modeling results and control recommendations are completed in 1996, this information will be incorporated into attainment plans being developed by the LADCO States. When these attainment plans are submitted to USEPA in mid-1997, these new modeling analyses will be reviewed to determine if the NO_X waiver should be continued, altered, or removed. USEPA's rulemaking action to reconsider the initial NO_X waiver may occur simultaneously with rulemaking action on the attainment plans. The USEPA also reserves the right to require NO_X emission controls for transportation sources under section 110(a)(2)(D) of the Act if future ozone modeling demonstrates that such controls are needed to achieve the ozone standard in downwind areas. The Chicago severe ozone nonattainment area includes the Counties of Cook, DuPage, Grundy (Aux Sable and Gooselake Townships), Kane, Kendall (Oswego Township), Lake, McHenry, and Will.

(m) [Reserved]

(n) Negative declaration— Shipbuilding and ship repair industry. On October 11, 1996, the State of Illinois certified to the satisfaction of the United States Environmental Protection Agency that no major sources categorized as part of the shipbuilding and ship repair industry are located in the Chicago, Illinois ozone nonattainment area which is comprised of Cook, DuPage, Kane, Lake, McHenry, Will

Counties and Aux Sable and Goose Lake Townships in Grundy County and Oswego Township in Kendall County or the Metro-East, Illinois ozone nonattainment area which is comprised of Madison, Monroe, and St. Clair Counties.

(o) Negative declaration— Aerospace manufacturing and rework industry. On October 11, 1996, the State of Illinois certified to the satisfaction of the United States Environmental Protection Agency that no major sources categorized as part of the Aerospace Manufacturing and Rework Industry are located in the Chicago, Illinois ozone nonattainment area which is comprised of Cook, DuPage, Kane, Lake, McHenry, Will Counties and Aux Sable and Goose Lake Townships in Grundy County and Oswego Township in Kendall County or the Metro-East, Illinois ozone nonattainment area which is comprised of Madison, Monroe, and St. Clair Counties.

(p) Approval—On November 15, 1993, Illinois submitted 15 percent rate-of-progress and 3 percent contingency plans for the Chicago ozone nonattainment area as a requested revision to the Illinois State Implementation Plan. These plans satisfy sections 182(b)(1), 172(c)(9), and 182(c)(9) of the Clean Air Act, as amended in 1990.

(q) Approval—On November 15, 1993, Illinois submitted 15 percent rate-of-progress and 3 percent contingency plans for the Metro-East St. Louis ozone nonattainment area as a requested revision to the Illinois State Implementation Plan. These plans satisfy sections 182(b)(1) and 172(c)(9) of the Clean Air Act, as amended in 1990.

(r) Approval—On November 15, 1993, Illinois submitted the following transportation control measures as part of the 15 percent rate-of-progress and 3 percent contingency plans for the Metro-East ozone nonattainment area: Work trip reductions; transit improvements; and traffic flow improvements.

(s) On October 10, 1997, Illinois submitted a site-specific revision to the State Implementation Plan, in the form of a letter from Bharat Mathur, Chief, Bureau of Air, Illinois Environmental Protection Agency. This October 10, 1997, letter requests a change in regulatory status for Riverside Laboratories, Inc.'s Kane County facility, to reflect that the Federal site-specific rule for Riverside (40 CFR 52.741(e)(10)) has been superseded by the State of Illinois regulations, including the emission limits in 35 Illinois Administrative Code 218.204(c) and the associated control requirements, test methods and recordkeeping requirements in Part 218 and the associated definitions in part 211. These State regulations shall become the federally approved regulations applicable to Riverside on August 31, 1998. The site-specific rule, applicable to Riverside, promulgated by the Environmental Protection Agency on August 21, 1995 (40 CFR 52.741(e)(10)), remains in effect and is enforceable after August 31, 1998 for the period before August 31, 1998.

(t) The Illinois volatile organic compound (VOC) rules that apply to the Stepan Company Millsdale Plant for volatile organic liquid storage (35 Ill. Admin. Code Part 218, Subpart B), batch processing (35 Ill. Admin. Code Parts 218 and 219, Subpart V) and continuous reactor and distillation processes (35 Ill. Admin. Code Part 218, Subpart Q) were approved by the United States Environmental Protection Agency (USEPA) on August 8, 1996, April 2, 1996, and June 17, 1997, respectively. Because these rules have been approved into the State Implementation Plan and represent reasonably available control technology for VOC, USEPA revokes the June 29, 1990 Federal Implementation Plan as it applies to Stepan and replaces it with Illinois' volatile organic liquid storage, batch process, and continuous reactor and distillation process rules.

(u) Negative declaration—Industrial wastewater category. On October 2, 1998, the State of Illinois certified to the satisfaction of the United States Environmental Protection Agency that no major sources categorized as part of the Industrial wastewater category are located in the Metro-East ozone nonattainment area (Metro-East). The Metro-East area is comprised of Madison, Monroe and St. Clair Counties which are located in southwest Illinois, adjacent to St. Louis, Missouri.

(v) Negative declaration—Industrial cleaning solvents category. On October 2, 1998, the State of Illinois certified to

the satisfaction of the United States Environmental Protection Agency that no major sources categorized as part of the Industrial cleaning solvents category are located in the Metro-East ozone nonattainment area (Metro-East). The Metro-East area is comprised of Madison, Monroe and St. Clair Counties which are located in southwest Illinois, adjacent to St. Louis, Missouri.

(w) *Approval*—On December 18, 1997, December 17, 1999, January 14, 2000, and January 21, 2000, Illinois submitted a post-1996 Rate Of Progress Plan for the Chicago ozone nonattainment area as a requested revision to the Illinois State Implementation Plan. This plan reduces ozone precursor emissions by 9 percent from 1990 baseline emissions by November 15, 1999. This plan also supports a mobile source emissions budget of 279.3 tons/day of volatile organic compounds for transportation conformity purposes.

(x) *Approval*—On December 18, 1997, Illinois submitted a contingency measure plan as part of the Chicago Area post-1996 Rate of Progress Plan. This plan reduces volatile organic compound emissions in the Chicago ozone nonattainment area by 3 percent from 1990 baseline emissions by November 15, 1999.

(y) *Approval*—On December 18, 1997, Illinois submitted Transportation Control Measures (TCMs) as part of the post-1996 Rate Of Progress Plan for the Chicago ozone nonattainment area. The TCMs being approved are listed in the following documents published by the Chicago Area Transportation Study: "Transportation Control Measures Contribution to the Post-1996 Rate-Of-Progress State Implementation Plan," March 22, 1996; "Transportation Control Measures Contribution to the 9 percent Control Strategy State Implementation Plan," June 11, 1998; and "1999 Transportation Control Measures Contribution to the 9 percent Rate of Progress Control Strategy State Implementation Plan," December 9, 1999.

(z) Negative declaration—Industrial cleaning solvents category. On December 23, 1999, the State of Illinois certified to the satisfaction of the United States Environmental Protection Agency that no major sources categorized as part of the industrial cleaning solvents category are located in the Chicago ozone nonattainment area. The Chicago ozone nonattainment area includes Cook County, DuPage County, Aux Sable and Goose Lake Townships in Grundy County, Kane County, Oswego Township in Kendall County, Lake County, McHenry County and Will County.

(aa) Negative declaration—Industrial wastewater category. On December 23, 1999, the State of Illinois certified to the satisfaction of the United States Environmental Protection Agency that no major sources categorized as part of the Industrial Wastewater Category are located in the Chicago ozone nonattainment area. The Chicago ozone nonattainment area includes Cook County, DuPage County, Aux Sable and Goose Lake Townships in Grundy County, Kane County, Oswego Township in Kendall County, Lake County, McHenry County and Will County.

(bb) Approval—Revisions to the SIP submitted by Illinois on November 15, 1999; February 10, 2000; April 13, 2001; and April 30, 2001. The revisions are for the purpose of satisfying the attainment demonstration requirements of section 182(c)(2)(A) of the Act for the Metro-East St. Louis area. The revision establishes an attainment date of November 15, 2004, for the St. Louis moderate ozone nonattainment area. This revision establishes MVEBs for 2004 of 26.62 TPD of VOC and 35.52 TPD of NO_X to be used in transportation conformity in the Metro-East St. Louis area until revised budgets pursuant to MOBILE6 are submitted and found adequate. In the revision, Illinois commits to revise its VOC and NO_X transportation conformity budgets within two years of the release of MOBILE6. No conformity determinations will be made during the second year following the release of MOBILE6 unless and until the MVEBs have been recalculated using MOBILE6 and found adequate by EPA. EPA is granting a waiver for the Metro East St. Louis area to the state of Illinois from the NO_X RACT requirements of the Act and disapproving the request for a waiver from the NO_X NSR and NO_X general conformity requirements. EPA is finding that the Contingency Measures

identified by Illinois are adequate to meet the requirements of the Act. EPA finds that the Illinois SIP meets the requirements pertaining to RACM under the Act for the Metro-East St. Louis area.

(cc) Approval—Illinois has adopted and USEPA has approved sufficient NO_X emission regulations to assure that it will achieve the level of NO_X emissions budgeted for the State by USEPA. USEPA has made two minor budget revisions requested by Illinois, adding a boiler owned by LTV Steel and deleting a boiler owned by the University of Illinois from the inventory of large NO_X sources.

(dd) Chicago Ozone Attainment Demonstration Approval—On December 26, 2000, Illinois submitted a one-hour ozone attainment demonstration plan as a requested revision to the Illinois State Implementation Plan. This plan includes: A modeled demonstration of attainment and associated attainment year conformity emission budgets; a plan to reduce ozone precursor emissions by 3 percent per year from 2000 to 2007 (a post-1999 rate-of-progress plan), and associated conformity emission budgets; a contingency measures plan for both the ozone attainment demonstration and the post-1999 rate-of-progress plan; a commitment to conduct a Mid-Course Review of the ozone attainment demonstration by the end of 2004; a demonstration that Illinois has implemented all reasonably available control measures; and a commitment to revise motor vehicle emission budgets within two years after the U.S. Environmental Protection Agency officially releases the MOBILE6 emission factor model.

(ee) Approval of the Maintenance Plan for the Illinois Portion of the St. Louis Area—On December 30, 2002 Illinois submitted Maintenance Plan for the Illinois portion of the St. Louis Nonattainment Area. The plan includes 2014 On-Road Motor Vehicle Emission Budget of 10.13 tons per ozone season weekday of VOCs and 18.72 tons per ozone season weekday NO_X to be used in transportation conformity.

(ff) Approval—On April 11, 2003, Illinois submitted a revision to the ozone attainment plan for the Chicago severe 1-hour ozone nonattainment area. This plan revised the 2005 and 2007 Motor Vehicle Emissions Budgets (MVEB) recalculated using the emissions factor model MOBILE6. The approved motor vehicle emissions budgets are 151.11 tons per day VOC for 2005 and 127.42 tons per day VOC and 280.4 tons per day NO_X for 2007.

[45 FR 55197, Aug. 19, 1980]

EDITORIAL NOTE: For FEDERAL REGISTER citations affecting § 52.726, see the List of CFR Sections Affected, which appears in the Finding Aids section of the printed volume and on GPO Access.

§ 52.727 [Reserved]

§ 52.728 Control strategy: Nitrogen dioxide. [Reserved]

§ 52.729 Control strategy: Carbon monoxide.

The following source specific emission controls are approved:

(a) Approval—On August 15, 1996, the Illinois Environmental Protection Agency requested that the Marathon Oil Company in Robinson, Illinois be granted a carbon monoxide (CO) state implementation plan (SIP) revision with specified conditions. This SIP revision limits the Marathon Oil Company's CO emissions from its fluid bed catalytic cracking unit CO boiler to be no more than 300 parts per million of CO corrected for 50 percent excess air beginning January 19, 1996, and ending August 4, 1997. The variance became effective January 19, 1996. The SIP revision request satisfies all applicable requirements of the Clean Air Act.

(b) [Reserved]

[62 FR 16705, Apr. 8, 1997]

§ 52.730 Compliance schedules.

(a) The requirements of § 51.262(a) of this chapter are not met since compliance schedules with adequate increments of progress have not been submitted for every source for which they are required.

(b) Federal compliance schedules. (1) Except as provided in paragraph (b)(3) of this section, the owner or operator of any stationary source subject to the following emission limiting regulations in the Illinois implementation plan shall comply with the applicable compliance schedule in paragraph (b)(2) of

this section: Illinois Air Pollution Control Regulations Rule 203(d)(4), 203(d)(6)(B)(ii)(bb), 203(g)(1)(B), 203(g)(2), 203(g)(3), 203(g)(4), 204(c)(1)(A), 204(c)(2), 204(d), and 204(e).

(2) *Compliance schedules.* (i) The owner or operator of any stationary source subject to Illinois Air Pollution Control Regulation Rule 203(d)(4) shall take the following actions with respect to the source no later than the date specified.

(*a*) September 30, 1973—Advertise for bids for purchase and construction or installation of equipment, or for materials requisite for process modification sufficient to control particulate emissions from the source.

(*b*) November 15, 1973—Award contracts for emission control systems or process modification, or issue orders for the purchase of component parts to accomplish emission control or process modification.

(*c*) May 31, 1974—Initiate onsite construction or installation of emission control system or process modification.

(*d*) March 31, 1975—Complete onsite construction or installation of emission system or process modification.

(*e*) May 31, 1975—Complete shakedown operation and performance test on source, submit performance test results to the Administrator; achieve full compliance with State agency regulation.

(ii) The owner or operator of any stationary source subject to Illinois Air Pollution Control Regulation Rule 203(d)(6)(B)(ii)(bb) shall take the following actions with respect to the source no later than the date specified.

(*a*) September 30, 1973—Advertise for bids for purchase and construction or for modification of equipment sufficient to control particulate emissions from the source.

(*b*) November 15, 1973—Award contracts for emissions control systems or process modification, or issue orders for the purchase of component parts to accomplish emission control or process modification.

(*c*) March 31, 1974—Initiate onsite construction or installation of emission control system.

(*d*) October 31, 1974—Complete onsite construction or installation of emission control system.

(*e*) December 31, 1974—Achieve final compliance with Illinois Air Pollution Control Regulations Rule 203(d)(6)(B)(ii)(bb).

(iii) (*a*) The owner or operator of any boiler or furnace of more than 250 million BTU per hour heat input subject to Illinois Air Pollution Control Regulation Rule 204(c)(1)(A), 204(c)(2), 204(d), and 204(e) shall notify the Administrator, no later than October 1, 1973, of his intent to utilize either low-sulfur fuel or stack gas desulfurization to the requirements of said regulation.

(*b*) Any owner or operator of a stationary source subject to paragraph (b)(2)(iii)(*a*) of this section who elects to utilize low sulfur fuel shall take the following actions with respect to the source no later than the date specified.

(*1*) November 1, 1973—Submit to the Administrator a projection of the amount of fuel, by types, that will be substantially adequate to enable compliance with Illinois Air Pollution Control Regulations Rule 204(c)(1)(A), 204(c)(2), 204(d), and 204(e) on May 31, 1975, and for at least one year thereafter.

(*2*) December 31, 1973—Sign contracts with fuel suppliers for fuel requirements as projected above.

(*3*) January 31, 1974—Submit a statement as to whether boiler modifications will be required. If modifications will be required, submit plans for such modifications.

(*4*) March 15, 1974—Let contracts for necessary boiler modifications, if applicable.

(*5*) June 15, 1974—Initiate onsite modifications, if applicable.

(*6*) March 31, 1975—Complete onsite modifications, if applicable.

(*7*) May 31, 1975—Final compliance with the emission limitation of Rules 204(c)(1)(A), 204(c)(2), 204(d), and 204(e).

(*c*) Any owner or operator of a fuel combustion source subject to paragraph (b)(2)(iii)(*a*) of this section who elects to utilize stack gas desulfurization shall take the following actions with respect to the source no later than the date specified.

(*1*) November 1, 1973—Let necessary contracts for construction.

(*2*) March 31, 1974—Initiate onsite construction.

(*3*) March 31, 1975—Complete onsite construction.

(*4*) May 31, 1975—Complete shakedown operations and performance test on source, submit performance test results to the Administrator; achieve full compliance with Rule 204(c)(1)(A), 204(c)(2), 204(d), and 204(e).

(iv) (*a*) The owner or operator of any stationary source subject to Illinois Air Pollution Control Regulations Rule 203(g)(1)(B), 203(g)(2), 203(g)(3), and 203(g)(4) shall notify the Administrator, no later than October 1, 1973, of his intent to utilize either low ash fuel or a stack gas cleaning system to meet the requirements of said regulation.

(*b*) Any owner or operator of a stationary source subject to paragraph (b)(2)(iv)(*a*) of this section who elects to utilize low ash fuel shall take the following actions with respect to the source no later than the date specified.

(*1*) November 1, 1973—Submit to the Administrator a projection of the amount of fuel, by types, that will be substantially adequate to enable compliance with Illinois Air Pollution Control Regulations Rule 203(g)(1)(B), 203(g)(2), 203(g)(3), and 203(g)(4) on May 31, 1975, and for at least one year thereafter.

(*2*) December 31, 1973—Sign contracts with fuel suppliers for fuel requirements as projected above.

(*3*) January 31, 1974—Submit a statement as to whether boiler modifications will be required. If modifications will be required, submit plans for such modifications.

(*4*) March 15, 1974—Let contracts for necessary boiler modifications, if applicable.

(*5*) June 15, 1974—Initiate onsite modifications, if applicable.

(*6*) March 31, 1975—Complete onsite modifications, if applicable.

(*7*) May 31, 1975—Final compliance with the emission limitation of Rule 203(g)(1)(B), 203(g)(2), 203(g)(3), and 203(g)(4).

(*c*) Any owner or operator of a stationary source subject to paragraph (b)(2)(iv)(*a*) of this section who elects to utilize a stack gas cleaning system shall take the following actions with respect to the source no later than the date specified.

(*1*) January 15, 1974—Let necessary contracts for construction.

(*2*) April 1, 1974—Initiate onsite construction.

(*3*) April 1, 1975—Complete onsite construction.

(*4*) May 31, 1975—Complete shakedown operations and performance tests on source, submit performance test results to the Administrator; achieve full compliance with Rule 203(g)(1)(B), 203(g)(2), 203(g)(3), and 203(g)(4).

(v) Ten days prior to the conduct of any performance test required by this paragraph, the owner or operator of the affected source shall give notice of such test to the Administrator to afford him the opportunity to have an observer present.

(vi) Any owner or operator subject to a compliance schedule above shall certify to the Administrator, within five days after the deadline for each increment of progress in that schedule, whether or not the increment has been met.

(3)(i) None of the above paragraphs shall apply to a source which is presently in compliance with applicable regulations and which has certified such compliance to the Administrator by October 1, 1973. The Administrator may request whatever supporting information he considers necessary for proper certification.

(ii) Any compliance schedule adopted by the State and approved by the Administrator shall satisfy the requirements of this paragraph for the affected source.

(iii) Any owner or operator subject to a compliance schedule in this paragraph may submit to the Administrator no later than October 1, 1973, a proposed alternative compliance schedule. No such compliance schedule may provide for final compliance after the final compliance date in the applicable compliance schedule of this paragraph. If promulgated by the Administrator, such schedule shall satisfy the requirements of this paragraph for the affected source.

(4) Nothing in this paragraph shall preclude the Administrator from promulgating a separate schedule for any source to which the application of the compliance schedules in paragraph (b)(2) of this section fail to satisfy the

requirements of §§ 51.261 and 51.262(a) of this chapter.

(c) [Reserved]

(d) The compliance schedules for the sources identified below are disapproved as not meeting the requirements of subpart N of this chapter. All regulations cited are air pollution control regulations of the State, unless otherwise noted.

Source	Location	Regulation involved	Date schedule adopted
CHRISTIAN COUNTY			
Allied Mills, Inc	Taylorville	204(c)	Feb. 28, 1973.
COOK COUNTY			
Harco Aluminum Inc	Chicago	204(c)	Dec. 9, 1973.
J. L. Clark Manufacturing Co	Downers Grove	205(f)	May 4, 1973.
Johnson & Johnson	Bedford Park	205(f)	Jun. 20, 1973.
Lloyd J. Harris Pie, Co. Inc	Chicago	204(c)	Feb. 27, 1973.
Union Oil Co. of California	.....do	204(c)	Jun. 19, 1973,
(a) No. 10 boiler			Dec. 13, 1973.
(b) 11BIA crude heater.			
W. H. Hutchingson & Son, Inc	.....do	205(f)	Aug. 12, 1973.
Western Rust Proof Co	.....do	204(c)	Oct. 10, 1973.
Wheeler Uniform Service Inc	.....do	204(c)	May 22, 1973.
Wm. Yuenger Manufacturing Co	.....do	204(c)	Aug. 16, 1973.
World's Finest Chocolate Inc	.....do	204(c)	May 30, 1973.
JACKSON COUNTY			
Tuck Industries, Inc	Carbondale	204(c)	Jun. 20, 1973.
KANE COUNTY			
All Steel Equipment Corp	Montgomery	204(f)	July 24, 1973.
Consolidated Food Inc	Aurora	205(f)	May 9, 1973.
LAKE COUNTY			
Morton Manufacturing Co	Libertyville	205(f)	Aug. 27, 1973.
LA SALLE COUNTY			
Allied Mills Inc	Mendota	204(c)	May 28, 1973.
MADISON COUNTY			
Clark Oil & Refining Corp	Hartford	204(f)	Feb. 22, 1973.
Granite City Steel Co	Granite City	203(d)(6)	Apr. 25, 1972.
(a) Coke oven pushing operations			as amended.
(b) Charging operations			May 21, 1973.
Illinois Power Company (Wood River Boiler No. 5)	E. Alton	204(c)	May 1, 1973.
Owens-Illinois Inc	Madison	204(c)	May 2, 1973.
Owen-Illinois Inc. (No. 2 Powerhouse)	Alton	204(c)	Mar. 30, 1973.
Shell Oil Co. (Cat. Cracker Units Nos. 1, 2)	Roxana	203(b)	Nov. 27, 1972.
RANDOLF COUNTY			
Chester Dairy Co	Chester	204(c)	Aug. 6, 1973.
ST. CLAIR COUNTY			
Lock Stove Co	East St. Louis	205(b)	June 11, 1973.
TAZEWELL COUNTY			
Quaker Oats Co	Pekin	204(c)	May 24, 1973.
VERMILLION COUNTY			
Lauhoff Grain Co	Danville	204(c)	Mar. 31, 1973.

[38 FR 16145, June 20, 1973, as amended at 38 FR 22742, Aug. 23, 1973; 38 FR 24342, Sept. 7, 1973; 39 FR 28155, Aug. 5, 1974; 51 FR 40675, 40676, 40677, Nov. 7, 1986; 54 FR 25258, June 14, 1989]

§§ 52.731–52.735 [Reserved]

§ 52.736 Review of new sources and modifications.

(a) [Reserved]

(b) The rules submitted by the State on March 24, 1988, to satisfy the requirements of the Clean Air Act are approved. These rules are part 203: Major Stationary Sources Construction and Modification as effective March 22, 1991. The moratorium on construction and modification of new sources in nonattainment areas as provided in section 110(a)(2)(I) of the Clean Air Act is revoked.

[57 FR 59935, Dec. 17, 1992]

§ 52.737 Operating permits.

Emission limitation and other provisions contained in operating permits issued by the State in accordance with the provisions of the federally approved permit program shall be the applicable requirements of the federally approved Illinois SIP for the purpose of section 113 of the Clean Air Act and shall be enforceable by USEPA and by any person in the same manner as other requirements of the SIP. USEPA reserves the right to deem an operating permit not federally enforceable. Such a determination will be made according to appropriate procedures, and be based upon the permit, permit approval procedures or permit requirements which do not conform with the operating permit program requirements or the requirements of USEPA's underlying regulations.

[57 FR 59936, Dec. 17, 1992]

§ 52.738 Significant deterioration of air quality.

(a) The requirements of sections 160 through 165 of the Clean Air Act are not met, since the plan does not include approvable procedures for preventing the significant deterioration of air quality.

(b) *Regulations for preventing significant deterioration of air quality*. The provisions of § 52.21 except paragraph (a)(1) are hereby incorporated and made a part of the applicable State plan for the State of Illinois.

(c) All applications and other information required pursuant to § 52.21 from sources located in the State of Illinois shall be submitted to the Director of the Illinois Environmental Protection Agency, 2200 Churchill Road, Springfield, Illinois 62706 instead of the EPA Region V office.

[45 FR 52741, Aug. 7, 1980, as amended at 46 FR 9584, Jan. 29, 1981; 68 FR 11323, Mar. 10, 2003; 68 FR 74489, Dec. 24, 2003]

§ 52.739 Permit fees.

(a) The requirements of section 110(a)(2)(K) of the Clean Air Act as amended in 1977 are not met since the state has not submitted to EPA, as a part of its State Implementation Plan, provisions for a permit fee system.

[46 FR 23237, Apr. 24, 1981]

§ 52.740 Interstate pollution.

(a) The requirements of section 126(a)(2) of the Clean Air Act as amended in 1977 are not met since the state has not submitted to EPA, as a part of its State Implementation Plan, the procedures on which the state is relying to notify nearby states of any proposed major stationary source which may significantly contribute to levels of air pollution in excess of the National Ambient Air Quality Standards in that state.

[46 FR 23237, Apr. 24, 1981]

§ 52.741 Control strategy: Ozone control measures for Cook, DuPage, Kane, Lake, McHenry and Will Counties.

(a) *General Provisions*—(1) *Abbreviations and conversion factors.* (i) The following abbreviations are used in § 52.741:

ASTM American Society for Testing and Materials
bbl barrels (42 gallons)
°C degrees Celsius or centigrade
cm centimeters
cu in. cubic inches
°F degrees Fahrenheit
FIP Federal implementation plan
ft feet
ft^2 square feet
g grams
gpm gallons per minute
g/mole grams per mole
gal gallons
hr hours
in inches
K degrees Kelvin
kcal kilocalories

kg kilograms
kg/hr kilograms per hour
kPa kilopascals; one thousand newtons per square meter
l liters
l/sec liters per second
lbs pounds
lbs/hr pounds per hour
lbs/gal pounds per gallon
LEL lower explosive limit
m meters
m^2 square meters
m^3 cubmic meters
mg milligrams
Mg Megagrams, metric tons or tonnes
ml milliliters
min minutes
MJ megajoules
mm Hg millimeters of mercury
ppm parts per million
ppmv parts per million by volume
psi pounds per square inch
psia pounds per square inch absolute
psig pounds per square inch gauge
scf standard cubic feet
scm standard cubic meters
sec seconds
SIP State implementation plan
sq cm square centimeters
sq in square inches
USEPA United States Environmental Protection Agency
VOC volatile organic compounds
VOL volatile organic liquids
VOM volatile organic materials

(ii) The following conversion factors are used in §52.741.

English	Metric
1 gal	3.785 l.
1,000 gal	3,785 l or 3.785 m^3.
1 psia	6.897 kPa (51.71 mm Hg).
2.205 lbs	1 kg.
1 bbl	159.0 l.
1 cu in	16.39 ml.
1 lb/gal	119,800 mg/l.
1 ton	0.907 Mg.

(2) *Applicability*. (i) Any source that received a stay, as indicated in §218.103(a)(2), remains subject to the stay if still in effect, or (if the stay is no longer in effect) the federally-promulgated or federally-approved rule applicable to such source.

(ii)(A) Effective November 20, 1996 Illinois Administrative Code Title 35: Environmental Protection, Subtitle B: Air pollution, Chapter I: Pollution Control Board, Subchapter c: Emissions Standards and Limitations for Stationary Sources, Part 211: Definitions and General Provisions, and Part 218: Organic Material Emission Standards and Limitations for the Chicago Area replace the requirements of 40 CFR 52.741 Control strategy: Ozone control measures for Cook, DuPage, Kane, Lake, McHenry and Will County as the federally enforceable control measures in these counties for the major non-Control Technique Guideline (CTG) sources in the Chicago area, previously subject to paragraph u, v, w, or x because of the applicability criteria in these paragraphs.

(B) In accordance with §218.101(b), for the major non-CTG sources subject to paragraphs u, v, w, or x because of the applicability criteria of those paragraphs, the requirements of paragraphs u, v, w, and x, and the recordkeeping requirements in paragraph y and any related parts of §52.741 necessary to implement these paragraphs (including, but not limited to, those paragraphs containing test methods and definitions), shall remain in effect and are enforceable after November 20, 1996 for the period from July 30, 1990 until November 20, 1996.

(iii)(A) Except as provided in paragraphs (a)(2) (i) and (ii) of this section, effective October 11, 1994, Illinois Administrative Code Title 35: Environmental Protection, Subtitle B: Air pollution, Chapter I: Pollution Control Board, Subchapter c: Emissions Standards and Limitations for Stationary Sources, Part 211: Definitions and General Provisions, and Part 218: Organic Material Emission Standards and Limitations for the Chicago Area replace the requirements of this §52.741 Control strategy: Ozone control measures for Cook, DuPage, Kane, Lake, McHenry and Will County as the federally enforceable control measures in these counties.

(B) In accordance with §218.101(b), the requirements of §52.741 shall remain in effect and are enforceable after October 11, 1994, for the period from July 30, 1990, to October 11, 1994.

(3) *Definitions*. The following terms are defined for the purpose of §52.741.

NOTE: The Federal definitions supersede the State definitions for these terms, which were previously approved by USEPA as part of the SIP. The federally approved definitions for all other terms remain in effect and applicable to these Federal rules.

Accelacota means a pharmaceutical coating operation which consists of a horizontally rotating perforated drum in which tablets are placed, a coating is applied by spraying, and the coating is dried by the flow of air across the drum through the perforations.

Accumulator means the reservoir of a condensing unit receiving the condensate from a surface condenser.

Actual emissions means the actual quantity of VOM emissions from an emission source during a particular time period.

Adhesive means any substance or mixture of substances intended to serve as a joining compound.

Administrator means the Administrator of the USEPA or that person's designee.

Afterburner means a control device in which materials in gaseous effluent are combusted.

Air contaminant means any solid, liquid, or gaseous matter, any odor, or any form of energy, that is capable of being released into the atmosphere from an emission source.

Air dried coatings means any coatings that dry by use of air or forced air at temperatures up to 363.15 K (194 °F).

Air pollution means the presence in the atmosphere of one or more air contaminants in sufficient quantities and of such characteristics and duration as to be injurious to human, plant, or animal life, to health, or to property, or to unreasonably interfere with the enjoyment of life or property.

Air pollution control equipment means any equipment or facility of a type intended to eliminate, prevent, reduce or control the emission of specified air contaminants to the atmosphere.

Air suspension coater/dryer means a pharmaceutical coating operation which consists of vertical chambers in which tablets or particles are placed, and a coating is applied and then dried while the tablets or particles are kept in a fluidized state by the passage of air upward through the chambers.

Air-assisted airless spray means a spray coating method which combines compressed air with hydraulic pressure to atomize the coating material into finer droplets than is achieved with pure airless spray. Lower hydraulic pressure is used than with airless spray.

Airless spray means a spray coating method in which the coating is atomized by forcing it through a small opening at high pressure. The coating liquid is not mixed with air before exiting from the nozzle.

Allowable emissions means the quantity of VOM emissions during a particular time period from a stationary source calculated using the maximum rated capacity of the source (unless restricted by federally enforceable limitations on operating rate, hours of operation, or both) and the most stringent of:

(A) The applicable standards in 40 CFR parts 60 and 61:

(B) The applicable implementation plan; or

(C) A federally enforceable permit.

Ambient air quality standards means those standards designed to protect the public health and welfare codified in 40 CFR part 50 and promulgated from time to time by the USEPA pursuant to authority contained in Section 108 of the Clean Air Act, 42 U.S.C. 7401 *et seq.*, as amended from time to time.

Applicator means a device used in a coating line to apply coating.

As applied means the exact formulation of a coating during application on or impregnation into a substrate.

Asphalt means the dark-brown to black cementitious material (solid, semisolid, or liquid in consistency) of which the main constituents are bitumens which occur naturally or as a residue of petroleum refining.

Automobile means a motor vehicle capable of carrying no more than 12 passengers.

Automobile or light-duty truck assembly plant means a facility where parts are assembled or finished for eventual inclusion into a finished automobile or light-duty truck ready for sale to vehicle dealers, but not including customizers, body shops, and other repainters.

Automobile or light-duty truck refinishing means the repainting of used automobiles and light-duty trucks.

Baked coatings means any coating which is cured or dried in an oven where the oven air temperature exceeds 90 °C (194 °F).

Binders means organic materials and resins which do not contain VOM's.

Bituminous coatings means black or brownish coating materials which are soluble in carbon disulfide, which consist mainly of hydrocarbons, and which are obtained from natural deposits or as residues from the distillation of crude oils or of low grades of coal.

Brush or wipe coating means a manual method of applying a coating using a brush, cloth, or similar object.

Bulk gasoline plant means a gasoline storage and distribution facility with an average throughput of 76,000 l (20,000 gal) or less on a 30-day rolling average that distributes gasoline to gasoline dispensing facilities.

Can means any metal container, with or without a top, cover, spout or handles, into which solid or liquid materials are packaged.

Can coating means any coating applied on a single walled container that is manufactured from metal sheets thinner than 29 gauge (0.0141 in.).

Can coating facility means a facility that includes one or more can coating line(s).

Can coating line means a coating line in which any protective, decorative, or functional coating is applied onto the surface of cans or can components.

Capture means the containment or recovery of emissions from a process for direction into a duct which may be exhausted through a stack or sent to a control device. The overall abatement of emissions from a process with an add-on control device is a function both of the capture efficiency and of the control device.

Capture device means a hood, enclosed room floor sweep or other means of collecting solvent or other pollutants into a duct. The pollutant can then be directed to a pollution control device such as an afterburner or carbon adsorber. Sometimes the term is used loosely to include the control device.

Capture efficiency means the fraction of all VOM generated by a process that are directed to an abatement or recovery device.

Capture system means all equipment (including, but not limited to, hoods, ducts, fans, ovens, dryers, etc.) used to contain, collect and transport an air pollutant to a control device.

Clean Air Act means the Clean Air Act of 1963, as amended, including the Clean Air Act Amendments of 1977, (42 U.S.C. 7401 *et seq.*).

Clear coating means coatings that lack color and opacity or are transparent using the undercoat as a reflectant base or undertone color.

Clear topcoat means the final coating which contains binders, but not opaque pigments, and is specifically formulated to form a transparent or translucent solid protective film.

Closed vent system means a system that is not open to the atmosphere and is composed of piping, connections, and, if necessary, flow inducing devices that transport gas or vapor from an emission source to a control device.

Coating means a material applied onto or impregnated into a substrate for protective, decorative, or functional purposes. Such materials include, but are not limited to, paints, varnishes, sealers, adhesives, thinners, diluents, and inks.

Coating applicator means equipment used to apply a coating.

Coating line means an operation consisting of a series of one or more coating applicators and any associated flash-off areas, drying areas, and ovens wherein a surface coating is applied, dried, or cured. (It is not necessary for an operation to have an oven, or flash-off area, or drying area to be included in this definition.)

Coating plant means any plant that contains one or more coating line(s).

Coil means any flat metal sheet or strip that is rolled or wound in concentric rings.

Coil coating means any coating applied on any flat metal sheet or strip that comes in rolls or coils.

Coil coating facility means a facility that includes one or more coil coating line(s).

Coil coating line means a coating line in which any protective, decorative or functional coating is applied onto the surface of flat metal sheets, strips, rolls, or coils for industrial or commercial use.

Cold cleaning means the process of cleaning and removing soils from surfaces by spraying, brushing, flushing, or immersion while maintaining the organic solvent below its boiling point.

Wipe cleaning is not included in this definition.

Component means, with respect to synthetic organic chemical and polymer manufacturing equipment, and petroleum refining and related industries, any piece of equipment which has the potential to leak VOM including, but not limited to, pump seals, compressor seals, seal oil degassing vents, pipeline valves, pressure relief devices, process drains, and open ended pipes. This definition excludes valves which are not externally regulated, flanges, and equipment in heavy liquid service. For purposes of paragraph (i) of this section, this definition also excludes bleed ports of gear pumps in polymer service.

Concrete curing compounds means any coating applied to freshly poured concrete to retard the evaporation of water.

Condensate means volatile organic liquid separated from its associated gases, which condenses due to changes in the temperature or pressure and remains liquid at standard conditions.

Continuous process means, with respect to polystyrene resin, a method of manufacture in which the styrene raw material is delivered on a continuous basis to the reactor in which the styrene is polymerized to polystyrene.

Control device means equipment (such as an afterburner or adsorber) used to remove or prevent the emission of air pollutants from a contaminated exhaust stream.

Control device efficiency means the ratio of pollution prevented by a control device and the pollution introduced to the control device, expressed as a percentage.

Conveyorized degreasing means the continuous process of cleaning and removing soils from surfaces utilizing either cold or vaporized solvents.

Crude oil means a naturally occurring mixture which consists of hydrocarbons and sulfur, nitrogen, or oxygen derivatives of hydrocarbons and which is a liquid at standard conditions.

Crude oil gathering means the transportation of crude oil or condensate after custody transfer between a production facility and a reception point.

Custody transfer means the transfer of produced petroleum and/or condensate after processing and/or treating in the producing operations, from storage tanks or automatic transfer facilities to pipelines or any other forms of transportation.

Daily-weighted average VOM content means the average VOM content of two or more coatings as applied on a coating line during any day, taking into account the fraction of total coating volume that each coating represents, as calculated with the following equation:

$$VOM_w = \left[\frac{\sum_{i=1}^{n} V_i C_i}{V_T} \right]$$

where:

VOM_w=The average VOM content of two or more coatings as applied each day on a coating line in units of kg VOM/l (lbs VOM/gal) of coating (minus water and any compounds which are specifically exempted from the definition of VOM),

n=The number of different coatings as applied each day on a coating line,

V_i=The volume of each coating (minus water and any compounds which are specifically exempted from the definition of VOM) as applied each day on a coating line in units of l (gal).

C_i=The VOM content of each coating as applied each day on a coating line in units of kg VOM/l (lbs VOM/gal) of coating (minus water and any compounds which are specifically exempted from the definition of VOM), and

V_T=The total volume of all coatings (minus water and any compounds which are specifically exempted from the definition of VOM) as applied each day on a coating line in units of l (gal).

Day means the consecutive 24 hours beginning at 12 a.m. (midnight) local time.

Degreaser means any equipment or system used in solvent cleaning.

Delivery vessel means any tank truck or trailer equipped with a storage tank that is used for the transport of gasoline to a stationary storage tank at a gasoline dispensing facility, bulk gasoline plant, or bulk gasoline terminal.

Dip coating means a method of applying coatings in which the part is submerged in a tank filled with the coating.

Drum means any cylindrical metal shipping container of 13- to 110-gallon capacity.

Electrostatic bell or disc spray means an electrostatic spray coating method in which a rapidly-spinning bell- or disc-shaped applicator is used to create a fine mist and apply the coating with high transfer efficiency.

Electrostatic spray means a spray coating method in which opposite electrical charges are applied to the substrate and the coating. The coating is attracted to the object due to the electrostatic potential between them.

Emission source and source mean any facility from which VOM is emitted or capable of being emitted into the atmosphere.

Enamel means a coating that cures by chemical cross-linking of its base resin. Enamels can be distinguished from lacquers because enamels are not readily resoluble in their original solvent.

Enclose means to cover any VOL surface that is exposed to the atmosphere.

End sealing compound coat means a compound applied to can ends which functions as a gasket when the end is assembled onto the can.

Excessive release means a discharge of more than 295 g (0.65 lbs) of mercaptans and/or hydrogen sulfide into the atmosphere in any 5-minute period.

Exterior base coat means a coating applied to the exterior of a can body, or flat sheet to provide protection to the metal or to provide background for any lithographic or printing operation.

Exterior end coat means a coating applied to the exterior end of a can to provide protection to the metal.

External-floating roof means a cover over an open top storage tank consisting of a double deck or pontoon single deck which rests upon and is supported by the volatile organic liquid being contained and is equipped with a closure seal or seals to close the space between the roof edge and tank shell.

Extreme environmental conditions means exposure to any or all of the following: ambient weather conditions; temperatures consistently above 95 °C (203 °F); detergents; abrasive and scouring agents; solvents; or corrosive atmospheres.

Extreme performance coating means any coating which during intended use is exposed to extreme environmental conditions.

Fabric coating means any coating applied on textile fabric. Fabric coating includes the application of coatings by impregnation.

Fabric coating facility means a facility that includes one or more fabric coating lines.

Fabric coating line means a coating line in which any protective, decorative, or functional coating or reinforcing material is applied on or impregnated into a textile fabric.

Federally enforceable means all limitations and conditions which are enforceable by the Administrator including those requirements developed pursuant to 40 CFR parts 60 and 61; requirements within any applicable implementation plan; and any permit requirements established pursuant to 40 CFR 52.21 or under regulations approved pursuant to 40 CFR part 51 subpart I and 40 CFR 51.166.

Final repair coat means the repainting of any topcoat which is damaged during vehicle assembly.

Firebox means the chamber or compartment of a boiler or furnace in which materials are burned, but not the combustion chamber or afterburner of an incinerator.

Fixed-roof tank means a cylindrical shell with a permanently affixed roof.

Flexographic printing means the application of words, designs, and pictures to a substrate by means of a roll printing technique in which the pattern to be applied is raised above the printing roll and the image carrier is made of elastomeric materials.

Flexographic printing line means a printing line in which each roll printer uses a roll with raised areas for applying an image such as words, designs, or pictures to a substrate. The image carrier on the roll is made of rubber or other elastome

Floating roof means a roof on a stationary tank, reservoir, or other container which moves vertically upon change in volume of the stored material.

Fountain solution means the solution which is applied to the image plate to

maintain hydrophilic properties of the non-image areas.

Fuel combustion emission source means any furnace, boiler, or similar equipment used for the primary purpose of producing heat or power by indirect heat transfer.

Fuel gas system means a system for collection of refinery fuel gas including, but not limited to, piping for collecting tail gas from various process units, mixing drums and controls, and distribution piping.

Gas/gas method means either of two methods for determining capture which rely only on gas phase measurements. The first method requires construction of a temporary total enclosure (TTE) to ensure that all would-be fugitive emissions are measured. The second method uses the building or room which houses the facility as an enclosure. The second method requires that all other VOM sources within the room be shut down while the test is performed, but all fans and blowers within the room must be operated according to normal procedures.

Gas service means that the component contains process fluid that is in the gaseous state at operating conditions.

Gasoline means any petroleum distillate or petroleum distillate/alcohol blend having a Reid vapor pressure of 27.6 kPa or greater which is used as a fuel for internal combustion engines.

Gasoline dispensing facility means any site where gasoline is transferred from a stationary storage tank to a motor vehicle gasoline tank used to provide fuel to the engine of that motor vehicle.

Gross vehicle weight means the manufacturer's gross weight rating for the individual vehicle.

Gross vehicle weight rating means the value specified by the manufacturer as the maximum design loaded weight of a single vehicle.

Heated airless spray means an airless spray coating method in which the coating is heated just prior to application.

Heatset means a class of web-offset lithography which requires a heated dryer to solidify the printing inks.

Heatset-web-offset lithographic printing line means a lithographic printing line in which a blanket cylinder is used to transfer ink from a plate cylinder to a substrate continuously fed from a roll or an extension process and an oven is used to solidify the printing inks.

Heavy liquid means liquid with a true vapor pressure of less than 0.3 kPa (0.04 psi) at 294.3 K (70 °F) established in a standard reference text or as determined by ASTM method D2879–86 (incorporated by reference as specified in 40 CFR 52.742); or which has 0.1 Reid Vapor Pressure as determined by ASTM method D323–82 (incorporated by reference as specified in 40 CFR 52.742); or which when distilled requires a temperature of 421.95 K (300 °F) or greater to recover 10 percent of the liquid as determined by ASTM method D86–82 (incorporated by reference as specified in 40 CFR 52.742).

Heavy off-highway vehicle products means, for the purpose of paragraph (e) of this section, heavy construction, mining, farming, or material handling equipment; heavy industrial engines; diesel-electric locomotives and associated power generation equipment; and the components of such equipment or engines.

Heavy off-highway vehicle products coating facility means a facility that includes one or more heavy off-highway vehicle products coating line(s).

Heavy off-highway vehicle products coating line means a coating line in which any protective, decorative, or functional coating is applied onto the surface of heavy off-highway vehicle products.

High temperature aluminum coating means a coating that is certified to withstand a temperature of 537.8 °C (1000 °F) for 24 hours.

Hood means a partial enclosure or canopy for capturing and exhausting, by means of a draft, the organic vapors or other fumes rising from a coating process or other source.

Hood capture efficiency means the emissions from a process which are captured by the hood and directed into a control device, expressed as a percentage of all emissions.

Hot well means the reservoir of a condensing unit receiving the condensate from a barometric condenser.

Hour means a block period of 60 minutes (*e.g.*, 1 a.m. to 2 a.m.).

In vacuum service means, for the purpose of paragraph (i) of this section, equipment which is operating at an internal pressure that is at least 5 kPa (0.73 psia) below ambient pressure.

In-process tank means a container used for mixing, blending, heating, reacting, holding, crystallizing, evaporating or cleaning operations in the manufacture of pharmaceuticals.

Incinerator means a combustion apparatus in which refuse is burned.

Indirect heat transfer means transfer of heat in such a way that the source of heat does not come into direct contact with process materials.

Ink means a coating used in printing, impressing, or transferring an image onto a substrate.

Interior body spray coat means a coating applied by spray to the interior of a can body.

Internal-floating roof means a cover or roof in a fixed-roof tank which rests upon and is supported by the volatile organic liquid being contained and is equipped with a closure seal or seals to close the space between the roof edge and tank shell.

Lacquers means any clear wood finishes formulated with nitrocellulose or synthetic resins to dry by evaporation without chemical reaction, including clear lacquer sanding sealers.

Large appliance means any residential and commercial washers, dryers, ranges, refrigerators, freezers, water heaters, dish washers, trash compactors, air conditioners, and other similar products.

Large appliance coating means any coating applied to the component metal parts (including, but not limited to, doors, cases, lids, panels, and interior support parts) of residential and commercial washers, dryers, ranges, refrigerators, freezers, water heaters, dish washers, trash compactors, air conditioners, and other similar products.

Large appliance coating facility means a facility that includes one or more large appliance coating line(s).

Large appliance coating line means a coating line in which any protective, decorative, or functional coating is applied onto the surface of large appliances.

Light liquid means VOM in the liquid state which is not defined as heavy liquid.

Light-duty truck means any motor vehicle rated at 3,850 kg gross vehicle weight or less, designed mainly to transport property.

Liquid/gas method means either of two methods for determining capture which require both gas phase and liquid phase measurements and analysis. The first method requires construction of a TTE. The second method uses the building or room which houses the facility as an enclosure. The second method requires that all other VOM sources within the room be shut down while the test is performed, but all fans and blowers within the room must be operated according to normal procedures.

Liquid service means that the equipment or component contains process fluid that is in a liquid state at operating conditions.

Lithographic printing line means a printing line, except that the substrate is not necessarily fed from an unwinding roll, in which each roll printer uses a roll where both the image and non-image areas are essentially in the same plane (planographic).

Magnet wire means aluminum or copper wire formed into an electromagnetic coil.

Magnet wire coating means any coating or electrically insulating varnish or enamel applied to magnet wire.

Magnet wire coating facility means a facility that includes one or more magnet wire coating line(s).

Magnet wire coating line means a coating line in which any protective, decorative, or functional coating is applied onto the surface of a magnet wire.

Malfunction means any sudden and unavoidable failure of air pollution control equipment, process equipment, or a process to operate in a normal or usual manner. Failures that are caused entirely or in part by poor maintenance, careless operation, or any other preventable upset condition or preventable equipment breakdown shall not be considered malfunctions.

Manufacturing process means a method whereby a process emission source or series of process emission sources is used to convert raw materials, feed

stocks, subassemblies, or other components into a product, either for sale or for use as a component in a subsequent manufacturing process.

Maximum theoretical emissions means the quantity of volatile organic material emissions that theoretically could be emitted by a stationary source before add-on controls based on the design capacity or maximum production capacity of the source and 8760 hours per year. The design capacity or maximum production capacity includes use of coating(s) or ink(s) with the highest volatile organic material content actually used in practice by the source.

Metal furniture means a furniture piece including, but not limited to, tables, chairs, waste baskets, beds, desks, lockers, benches, shelving, file cabinets, lamps, and room dividers.

Metal furniture coating means any non-adhesive coating applied to any furniture piece made of metal or any metal part which is or will be assembled with other metal, wood, fabric, plastic or glass parts to form a furniture piece including, but not limited to, tables, chairs, waste baskets, beds, desks, lockers, benches, shelving, file cabinets, lamps, and room dividers. This definition shall not apply to any coating line coating miscellaneous metal parts or products.

Metal furniture coating facility means a facility that includes one or more metal furniture coating line(s).

Metal furniture coating line means a coating line in which any protective, decorative, or functional coating is applied onto the surface of metal furniture.

Metallic shoe-type seal means a primary or secondary seal constructed of metal sheets (shoes) which are joined together to form a ring, springs, or levers which attach the shoes to the floating roof and hold the shoes against the tank wall, and a coated fabric which is suspended from the shoes to the floating roof.

Miscellaneous fabricated product manufacturing process means:

(A) A manufacturing process involving one or more of the following applications, including any drying and curing of formulations, and capable of emitting VOM:

(*1*) Adhesives to fabricate or assemble components or products.

(*2*) Asphalt solutions to paper or fiberboard.

(*3*) Asphalt to paper or felt.

(*4*) Coatings or dye to leather.

(*5*) Coatings to plastic.

(*6*) Coatings to rubber or glass.

(*7*) Disinfectant material to manufactured items.

(*8*) Plastic foam scrap or "fluff" from the manufacture of foam containers and packaging material to form resin pallets.

(*9*) Resin solutions to fiber substances.

(*10*) Viscose solutions for food casings.

(B) The storage and handling of formulations associated with the process described above, and the use and handling of organic liquids and other substances for clean-up operations associated with the process described in this definition.

Miscellaneous formulation manufacturing process means:

(A) A manufacturing process which compounds one or more of the following and is capable of emitting VOM:

(*1*) Adhesives.

(*2*) Asphalt solutions.

(*3*) Caulks, sealants, or waterproofing agents.

(*4*) Coatings, other than paint and ink.

(*5*) Concrete curing compounds.

(*6*) Dyes.

(*7*) Friction materials and compounds.

(*8*) Resin solutions.

(*9*) Rubber solutions.

(*10*) Viscose solutions.

(B) The storage and handling of formulations associated with the process described above, and the use and handling of organic liquids and other substances for clean-up operations associated with the process described in this definition.

Miscellaneous metal parts or products means any metal part or metal product, even if attached to or combined with a nonmental part or product, except cans, coils, metal furniture, large appliances, magnet wire, automobiles, ships, and airplane bodies.

Miscellaneous metal parts and products coating means any coating applied to

any metal part or metal product, even if attached to or combined with a nonmetal part or product, except cans, coils, metal furniture, large appliances, and magnet wire. Prime coat, prime surfacer coat, topcoat, and final repair coat for automobiles and light-duty trucks are not miscellaneous metal parts and products coatings. However, underbody anti-chip (*e.g.*, underbody plastisol) automobile, and light-duty truck coatings are miscellaneous metal parts and products coatings. Also, automobile or light-duty truck refinishing coatings, coatings applied to the exterior of marine vessels, coatings applied to the exterior of airplanes, and the customized topcoating of automobiles and trucks if production is less than 35 vehicles per day are not miscellaneous metal parts and products coatings.

Miscellaneous metal parts or products coating facility means a facility that includes one or more miscellaneous metal parts or products coating lines.

Miscellaneous metal parts or products coating line means a coating line in which any protective, decorative, or functional coating is applied onto the surface of miscellaneous metal parts or products.

Miscellaneous organic chemical manufacturing process means:

(A) A manufacturing process which produces by chemical reaction, one or more of the following organic compounds or mixtures of organic compounds and which is capable of emitting VOM:

(*1*) Chemicals listed in appendix A of this section.

(*2*) Chlorinated and sulfonated compounds.

(*3*) Cosmetic, detergent, soap, or surfactant intermediaries or specialties and products.

(*4*) Disinfectants.

(*5*) Food additives.

(*6*) Oil and petroleum product additives.

(*7*) Plasticizers.

(*8*) Resins or polymers.

(*9*) Rubber additives.

(*10*) Sweeteners.

(*11*) Varnishes.

(B) The storage and handling of formulations associated with the process described above and the use and handling of organic liquids and other substances for clean-up operations associated with the process described in this definition.

Monitor means to measure and record.

Multiple package coating means a coating made from more than one different ingredient which must be mixed prior to using and has a limited pot life due to the chemical reaction which occurs upon mixing.

Offset means, with respect to printing and publishing operations, use of a blanket cylinder to transfer ink from the plate cylinder to the surface to be printed.

Opaque stains means all stains that are not semi-transparent stains.

Open top vapor depressing means the batch process of cleaning and removing soils from surfaces by condensing hot solvent vapor on the colder metal parts.

Open-ended valve means any valve, except pressure relief devices, having one side of the valve in contact with process fluid and one side open to the atmosphere, either directly or through open piping.

Organic compound means any compound of carbon, excluding carbon monoxide, carbon dioxide, carbonic acid, metallic carbides or carbonates, and ammonium carbonate.

Organic material means any chemical compound of carbon including diluents and thinners which are liquids at standard conditions and which are used as dissolvers, viscosity reducers, or cleaning agents, but excluding methane, carbon monoxide, carbon dioxide, carbonic acid, metallic carbonic acid, metallic carbide, metallic carbonates, and ammonium carbonate.

Organic vapor means the gaseous phase of an organic material or a mixture of organic materials present in the atmosphere.

Oven means a chamber within which heat is used for one or more of the following purposes: Dry, bake, cure, or polymerize a coating or ink.

Overall control means the product of the capture efficiency and the control device efficiency.

Overvarnish means a transparent coating applied directly over ink or coating.

Owner or operator means any person who owns, operates, leases, controls, or supervises an emission source or air pollution control equipment.

Packaging rotogravure printing means rotogravure printing upon paper, paper board, metal foil, plastic film, and other substrates, which are, in subsequent operations, formed into packaging products or labels for articles to be sold.

Packaging rotogravure printing line means a rotogravure printing line in which surface coatings are applied to paper, paperboard, foil, film, or other substrates which are to be used to produce containers, packaging products, or labels for articles.

Pail means any cylindrical metal shipping container of 1- to 12-gallon capacity and constructed of 29-gauge and heavier metal.

Paint manufacturing plant means a plant that mixes, blends, or compounds enamels, lacquers, sealers, shellacs, stains, varnishes, or pigmented surface coatings.

Paper coating means any coating applied on paper, plastic film, or metallic foil to make certain products, including (but not limited to) adhesive tapes and labels, book covers, post cards, office copier paper, drafting paper, or pressure sensitive tapes. Paper coating includes the application of coatings by impregnation and/or saturation.

Paper coating facility means a facility that includes one or more paper coating lines.

Paper coating line means a coating line in which any protective, decorative, or functional coating is applied on, saturated into, or impregnated into paper, plastic film, or metallic foil to make certain products, including (but not limited to) adhesive tapes and labels, book covers, post cards, office copier paper, drafting paper, and pressure sensitive tapes.

Parts per million (volume) means a volume/volume ratio which expresses the volumetric concentration of gaseous air contaminant in a million unit volume of gas.

Person means any individual, corporation, partnership, association, State, municipality, political subdivision of a State; any agency, department, or instrumentality of the United States; and any officer, agent, or employee thereof.

Petroleum means the crude oil removed from the earth and the oils derived from tar sands, shale, and coal.

Petroleum refinery means any facility engaged in producing gasoline, kerosene, distillate fuel oils, residual fuel oils, lubricants, or other products through distillation of petroleum, or through redistillation, cracking, or reforming of unfinished petroleum derivatives.

Pharmaceutical means any compound or mixture, other than food, used in the prevention, diagnosis, alleviation, treatment, or cure of disease in man and animal.

Pharmaceutical coating operation means a device in which a coating is applied to a pharmaceutical, including air drying or curing of the coating.

Pigmented coatings means opaque coatings containing binders and colored pigments which are formulated to conceal the wood surface either as an undercoat or topcoat.

Plant means all of the pollutant-emitting activities which belong to the same industrial grouping, are located on one or more contiguous or adjacent properties, and are under the control of the same person (or persons under common control), except the activities of any marine vessel. Pollutant-emitting activities shall be considered as part of the same industrial grouping if they belong to the same "Major Group" (*i.e.*, which have the same two-digit code) as described in the "Standard Industrial Classification Manual, 1987" (incorporated by reference as specified in 40 CFR 52.742).

Plasticizers means a substance added to a polymer composition to soften and add flexibility to the product.

Prime coat means the first of two or more coatings applied to a surface.

Prime surfacer coat means a coating used to touch up areas on the surface of automobile or light-duty truck bodies not adequately covered by the prime coat before application of the top coat. The prime surfacer coat is applied between the prime coat and topcoat. An anti-chip coating applied to main body parts (*e.g.*, rocker panels,

bottom of doors and fenders, and leading edge of roof) is a prime surfacer coat.

Primers means any coatings formulated and applied to substrates to provide a firm bond between the substrate and subsequent coats.

Printing means the application of words, designs, and pictures to a substrate using ink.

Printing line means an operation consisting of a series of one or more roll printers and any associated roll coaters, drying areas, and ovens wherein one or more coatings are applied, dried, and/or cured.

Process means any stationary emission source other than a fuel combustion emission source or an incinerator.

Production equipment exhaust system means a system for collecting and directing into the atmosphere emissions of volatile organic material from reactors, centrifuges, and other process emission sources.

Publication rotogravure printing line means a rotogravure printing line in which coatings are applied to paper which is subsequently formed into books, magazines, catalogues, brochures, directories, newspaper supplements, or other types of printed material.

Reactor means a vat, vessel, or other device in which chemical reactions take place.

Refiner means any person who owns, leases operates, controls, or supervises a refinery.

Refinery unit, process unit or unit means a set of components which are a part of a basic process operation such as distillation, hydrotreating, cracking, or reforming of hydrocarbons.

Refrigerated condenser means a surface condenser in which the coolant supplied to the condenser has been cooled by a mechanical device, other than by a cooling tower or evaporative spray cooling, such as refrigeration unit or steam chiller unit.

Repair coatings means coatings used to correct imperfections or damage to furniture surface.

Repaired means, for the purpose of paragraph (i) of this section, that equipment component has been adjusted, or otherwise altered, to eliminate a leak.

Roll coater means an apparatus in which a uniform layer of coating is applied by means of one or more rolls across the entire width of a moving substrate.

Roll printer means an apparatus used in the application of words, designs, or pictures to a substrate, usually by means of one or more rolls each with only partial coverage.

Roll printing means the application of words, designs, and pictures to a substrate usually by means of a series of hard rubber or metal rolls each with only partial coverage.

Roller coating means a method of applying a coating to a sheet or strip in which the coating is transferred by a roller or series of rollers.

Rotogravure printing means the application of words, designs, and pictures to a substrate by means of a roll printing technique in which the pattern to be applied is recessed relative to the non-image area.

Rotogravure printing line means a printing line in which each roll printer uses a roll with recessed areas for applying an image to a substrate.

Safety relief valve means a valve which is normally closed and which is designed to open in order to relieve excessive pressures within a vessel or pipe.

Sanding sealers means any coatings formulated for and applied to bare wood for sanding and to seal the wood for subsequent application of varnish. To be considered a sanding sealer a coating must be clearly labelled as such.

Sealer means a coating containing binders which seals wood prior to the application of the subsequent coatings.

Semi-transparent stains means stains containing dyes or semi-transparent pigments which are formulated to enhance wood grain and change the color of the surface but not to conceal the surface, including, but not limited to, sap stain, toner, non-grain raising stains, pad stain, or spatter stain.

Set of safety relief valves means one or more safety relief valves designed to open in order to relieve excessive pressures in the same vessel or pipe.

Sheet basecoat means a coating applied to metal when the metal is in

sheet form to serve as either the exterior or interior of a can for either two-piece or three-piece cans.

Side-seam spray coat means a coating applied to the seam of a three-piece can.

Single coat means one coating application applied to a metal surface.

Solvent means a liquid substance that is used to dissolve or dilute another substance.

Solvent cleaning means the process of cleaning soils from surfaces by cold cleaning, open top vapor degreasing, or conveyorized degreasing.

Specified air contaminant means any air contaminant as to which this Section contains emission standards or other specific limitations.

Splash loading means a method of loading a tank, railroad tank car, tank truck, or trailer by use of other than a submerged loading pipe.

Standard conditions means a temperature of 70 °F and a pressure of 14.7 psia.

Standard cubic foot (scf) means the volume of one cubic foot of gas at standard conditions.

Standard Industrial Classification Manual means the Standard Industrial Classification Manual (1987), Superintendent of Documents, U.S. Government Printing Office, Washington, DC 20402 (incorporated by reference as specified in 40 CFR 52.742).

Start-up means the setting in operation of an emission source for any purpose.

Stationary emission source and *Stationary source* mean an emission source which is not self-propelled.

Storage tank or storage vessel means any stationary tank, reservoir or container used for the storage of VOL's.

Submerged loading pipe means any discharge pipe or nozzle which meets either of the following conditions:

(A) Where the tank is filled from the top, the end of the discharge pipe or nozzle must be totally submerged when the liquid level is 15 cm (6 in.) above the bottom of the tank.

(B) Where the tank is filled from the side, the discharge pipe or nozzle must be totally submerged when the liquid level is 46 cm (18 in.) above the bottom of the tank.

Substrate means the surface onto which a coating is applied or into which a coating is impregnated.

Surface condenser means a device which removes a substance from a gas stream by reducing the temperature of the stream, without direct contact between the coolant and the stream.

Tablet coating operation means a pharmaceutical coating operation in which tablets are coated.

Thirty-day rolling average means any value arithmetically averaged over any consecutive thirty-days.

Three-piece can means a can which is made from a rectangular sheet and two circular ends.

Topcoat means a coating applied in a multiple coat operation other than prime coat, final repair coat, or prime surfacer coat.

Topcoat operation means all topcoat spray booths, flash-off areas, and bake ovens at a facility which are used to apply, dry, or cure the final coatings (except final off-line repair) on components of automobile or light-duty truck bodies.

Transfer efficiency means the ratio of the amount of coating solids deposited onto a part or product to the total amount of coating solids used.

True vapor pressure means the equilibrium partial pressure exerted by a volatile organic liquid as determined in accordance with methods described in American Petroleum Institute Bulletin 2517, "Evaporation Loss From Floating Roof Tanks," second edition, February 1980 (incorporated by reference as specified in 40 CFR 52.742).

Two-piece can means a can which is drawn from a shallow cup and requires only one end to be attached.

Undercoaters means any coatings formulated for and applied to substrates to provide a smooth surface for subsequent coats.

Unregulated safety relief valve means a safety relief valve which cannot be actuated by a means other than high pressure in the pipe or vessel which it protects.

Vacuum producing system means any reciprocating, rotary, or centrifugal blower or compressor or any jet ejector or device that creates suction from a pressure below atmospheric and discharges against a greater pressure.

Valves not externally regulated means valves that have no external controls, such as in-line check valves.

Vapor balance system means any combination of pipes or hoses which creates a closed system between the vapor spaces of an unloading tank and a receiving tank such that vapors displaced from the receiving tank are transferred to the tank being unloaded.

Vapor collection system means all piping, seals, hoses, connections, pressure-vacuum vents, and other possible sources between the gasoline delivery vessel and the vapor processing unit and/or the storage tanks and vapor holder.

Vapor control system means any system that limits or prevents release to the atmosphere of organic meterial in the vapors displaced from a tank during the transfer of gasoline.

Vapor recovery system means a vapor gathering system capable of collecting all VOM vapors and gases discharged from the storage tank and a vapor disposal system capable of processing such VOM vapors and gases so as to prevent their emission to the atmosphere.

Vehicle means a device by which any person or property may be propelled, moved, or drawn upon a highway, excepting a device moved exclusively by human power or used exclusively upon stationary rails or tracks.

Vinyl coating means any topcoat or printing ink applied to vinyl coated fabric or vinyl sheets. Vinyl coating does not include plastisols.

Vinyl coating facility means a facility that includes one or more vinyl coating line(s).

Vinyl coating line means a coating line in which any protective, decorative or functional coating is applied onto vinyl coated fabric or vinyl sheets.

Volatile organic liquid means any substance which is liquid at storage conditions and which contains volatile organic compounds.

Volatile organic material (VOM) or volatile organic compounds (VOC) is as defined in §51.100(s) of this chapter.

Wash coat means a coating containing binders which seals wood surfaces, prevents undesired staining, and controls penetration.

Web means a substrate which is printed in continuous roll-fed presses.

Wood furniture means room furnishings including cabinets (kitchen, bath, and vanity), tables, chairs, beds, sofas, shutters, art objects, wood paneling, wood flooring, and any other coated furnishings made of wood, wood composition, or fabricated wood materials.

Wood furniture coating facility means a facility that includes one or more wood furniture coating line(s).

Wood furniture coating line means a coating line in which any protective, decorative, or functional coating is applied onto wood furniture.

Woodworking means the shaping, sawing, grinding, smoothing, polishing, and making into products of any form or shape of wood.

(4) *Testing methods and procedures*—(i) Coatings, inks and fountain solutions. The following test methods and procedures shall be used to determine compliance of as applied coatings, inks, and fountain solutions with the limitations set forth in §52.741.

(A) *Sampling.* Samples collected for analyses shall be one-liter taken into a one-liter container at a location and time such that the sample will be representative of the coating as applied (i.e., the sample shall include any dilution solvent or other VOM added during the manufacturing process). The container must be tightly sealed immediately after the sample is taken. Any solvent or other VOM added after the sample is taken must be measured and accounted for in the calculations in paragraph(a)(4)(i)(C) of this section. For multiple package coatings, separate samples of each component shall be obtained. A mixed sample shall not be obtained as it will cure in the container. Sampling procedures shall follow the guidelines presented in:

(*1*) ASTM D3925–81 (Reapproved 1985) Standard Practice for Sampling Liquid Paints and Related Pigment Coating. This practice is incorporated by reference as specified in 40 CFR 52.742.

(*2*) ASTM E300–86 Standard Practice for Sampling Industrial Chemicals. This practice is incorporated by reference as specified in 40 CFR 52.742.

(B) *Analyses.* The applicable analytical methods specified below shall be

used to determine the composition of coatings, inks, or fountain solutions as applied.

(*1*) Method 24 of 40 CFR part 60, appendix A, shall be used to determine the VOM content and density of coatings. If it is demonstrated to the satisfaction of the Administrator that plant coating formulation data are equivalent to Method 24 results, formulation data may be used. In the event of any inconsistency between a Method 24 test and a facility's formulation data, the Method 24 test will govern.

(*2*) Method 24A of 40 CFR part 60, appendix A, shall be used to determine the VOM content and density of rotogravure printing inks and related coatings. If it is demonstrated to the satisfaction of the Administrator that the plant coating formulation data are equivalent to Method 24A results, formulation data may be used. In the event of any inconsistency between a Method 24A test and a facility's formulation data, the Method 24A test will govern.

(*3*) The following ASTM methods are the analytical procedures for determining VOM:

(*i*) ASTM D1475–85: Standard Test Method for Density of Paint, Varnish, Lacquer and Related Products. This test method is incorporated by reference as specified in 40 CFR 52.742.

(*ii*) ASTM D2369–87: Standard Test Method for Volatile Content of Coatings. This test method is incorporated by reference as specified in 40 CFR 52.742.

(*iii*) ASTM D3792–86: Standard Test Method for Water Content of Water-reducible Paints by Direct Injection into a Gas Chromatograph. This test method is incorporated by reference as specified in 40 CFR 52.742.

(*iv*) ASTM D4017–81 (Reapproved 1987): Standard Test Method for Water in Paints and Paint Materials by the Karl Fischer Method. This test method is incorporated by reference as specified in 40 CFR 52.742.

(*v*) ASTM D4457–85: Standard Test Method for Determination of Dichloromethane and 1,1,1-Trichloroethane in Paints and Coatings by Direct Injection into a Gas Chromatograph. (The procedure delineated above can be used to develop protocols for any compounds specifically exempted from the definition of VOM.) This test method is incorporated by reference as specified in 40 CFR 52.742.

(*vi*) ASTM D2697–86: Standard Test Method for Volume Non-Volatile Matter in Clear or Pigmented Coatings. This test method is incorporated by reference as specified in 40 CFR 52.742.

(*vii*) ASTM D3980–87: Standard Practice for Interlaboratory Testing of Paint and Related Materials. This practice is incorporated by reference as specified in 40 CFR 52.742.

(*viii*) ASTM E180–85: Standard Practice for Determining the Precision of ASTM Methods for Analysis of and Testing of Industrial Chemicals. This practice is incorporated by reference as specified in 40 CFR 52.742.

(*ix*) ASTM D2372–85: Standard Method of Separation of Vehicle from Solvent-reducible Paints. This method is incorporated by reference as specified in 40 CFR 52.742.

(*4*) Use of an adaptation to any of the analytical methods specified in paragraphs (a)(4)(i)(B)(*1*), (*2*) and (*3*) may be approved by the Administrator on a case-by-case basis. An owner or operator must submit sufficient documentation for the Administrator to find that the analytical methods specified in paragraphs (a)(4)(i)(B)(*1*), (*2*) and (*3*) will yield inaccurate results and that the proposed adaptation is appropriate.

(C) *Calculations.* Calculations for determining the VOM content, water content and the content of any compounds which are specifically exempted from the definition of VOM of coatings, inks and fountain solutions as applied shall follow the guidance provided in the following documents.

(1) "A Guide for Surface Coating Calculation" EPA–340/1–86–016 (which is available from the National Technical Information Services, 5285 Port Royal Road, Springfield, VA 22161)

(2) "Procedures for Certifying Quantity of Volatile Organic Compounds Emitted by Paint, Ink and Other Coatings" (revised June 1986) EPA–450/3–84–019 (which is available from the National Technical Information Services, 5285 Port Royal Road, Springfield, VA 22161)

(3) "A Guide for Graphic Arts Calculations" August 1988 EPA–340/1–88–003 (which is available from the National Technical Information Services, 5285 Port Royal Road, Springfield, VA 22161)

(ii) *Automobile or light-duty truck test protocol.* The protocol for testing, including determining the transfer efficiency, of coating applicators at topcoat coating operations at an automobile assembly facility shall follow the procedure in: "Protocol for Determining the Daily Volatile Organic Compound Emission Rate of Automobile and Light-Duty Truck Topcoat Operations" December 1988 EPA–450/3–88–018 (which is available for purchase from the National Technical Information Services, 5285 Port Royal Road, Springfield, VA 22161)

(iii) *Capture system efficiency test protocols*—(A) *Applicability.* The requirements of paragraphs (a)(4)(iii)(B) of this section shall apply to all VOM emitting processes employing capture equipment (*e.g.,* hoods, ducts), except those cases noted below.

(*1*) If a source installs a permanent total enclosure (PTE) that meets USEPA specifications, and which directs all VOM to a control device, then the source is exempted from the requirements described in paragraph (B). The USEPA specifications to determine whether a strucutre is considered a PTE are given in Procedure T of appendix B of this section. In this instance, the capture efficiency is assumed to be 100 percent and the source is still required to measure control efficiency using appropriate test methods as specified in (a)(4)(iv) of this section.

(*2*) If a source uses a control device designed to collect and recover VOM (*e.g.,* carbon adsorber), an explicit measurement of capture efficiency is not necessary provided that the conditions given below are met. The overall control of the system can be determined by directly comparing the input liquid VOM to the recovered liquid VOM. The general procedure for use in this situation is given in 40 CFR 60.433, with the following additional restrictions:

(*i*) The source must be able to equate solvent usage with solvent recovery on a 24-hour (daily) basis, rather than a 30-day weighted average, within 72 hours following the 24-hour period. In addition, one of the following two criteria must be met:

(*ii*) The solvent recovery system (i.e., capture and control system) must be dedicated to a single process line (*e.g.,* one process line venting to a carbon adsorber system), or

(*iii*) If the solvent recovery system controls multiple process lines, then the source must be able to demonstrate that the overall control (*i.e.,* the total recovered solvent VOM divided by the sum of liquid VOM input to all process lines venting to the control system) meets or exceeds the most stringent standard applicable for any process line venting to the control system.

(B) *Specific requirements.* The capture efficiency of a process line shall be measured using one of the four protocols given below. Any error margin associated with a test protocol may not be incorporated into the results of a capture efficiency test. If these techniques are not suitable for a particular process, then the source must present an alternative capture efficiency protocol and obtain approval for it by the Administrator as a SIP or FIP revisions.

(*1*) Gas/gas method using temporary total enclosure (TTE). The USEPA specifications to determine whether a temporary enclosure is considered a TTE are given in Procedure T of appendix B of this section. The capture efficiency equation to be used for this protocol is:

$$CE = Gw / (GW + Fw)$$

Where:

CE=capture efficiency, decimal fraction.

Gw=mass of VOM captured and delivered to control device using a TTE.

Fw=mass of fugitive VOM that escapes from a TTE.

Procedure G.2 contained in appendix B of this section is used to obtain Gw. Procedure F.1 in appendix B of this section is used to obtain Fw.

(*2*) *Liquid/gas method using TTE.* The USEPA specifications to determine whether a temporary enclosure is considered a TTE are given in Procedure T of appendix B of this section. The capture efficiency equation to be used for this protocol is:

$$CE = (L - F) / L$$

where:

CE=capture efficiency, decimal fraction.
L=mass of liquid VOM input to process.
Fw=mass of fugitive VOM that escapes from a TTE.

Procedure L contained in appendix B of this section is used to obtain L. Procedure F.1 in appendix B of this section is used to obtain Fw.

(*3*) Gas/gas method using the building or room (building or room enclosure) in which the affected source is located as the enclosure and in which "F" and "G" are measured while operating only the affected facility. All fans and blowers in the building or room must be operated as they would under normal production. The capture efficiency equation to be used for this protocol is:

$$CE = G / (G + F_B)$$

Where:

CE=capture efficiency, decimal fraction.
G=mass of VOM captured and delivered to control device.
F_B=mass of fugitive VOM that escapes from building enclosure.

Procedure G.2 contained in appendix B of this section is used to obtain G. Procedure F.2 in appendix B of this section is used to obtain F_B.

(*4*) Liquid/gas method using the building or room (building or room enclosure) in which the affected source is located as the enclosure and in which "F" and "L" are measured while operating only the affected facility. All fans and blowers in the building or room must be operated as they would under normal production. The capture efficiency equation to be used for this protocol is:

$$CE = (L - F_B) / L$$

Where:

CE=capture efficiency, decimal fraction.
L=mass of liquid VOM input to process.
F_B=mass of fugitive VOM that escapes from building enclosure.

Procedure L contained in appendix B of this section is used to obtain L. Procedure F.2 in appendix B of this section is used to obtain F_B.

(C) *Recordkeeping and reporting.* (*1*) All affected facilities must maintain a copy of the capture efficiency protocol submitted to USEPA on file. All results of the appropriate test methods and capture efficiency protocols must be reported to USEPA within sixty (60) days of the test date. A copy of the results must be kept on file with the source for a period of three (3) years.

(*2*) If any changes are made to capture or control equipment, then the source is required to notify USEPA of these changes and a new test may be required by USEPA.

(*3*) The source must notify the Administrator 30 days prior to performing any capture efficiency or control test. At that time, the source must notify the Administrator which capture efficiency protocol and control device test methods will be used.

(*4*) Sources utilizing a PTE must demonstrate that this enclosure meets the requirement given in Procedure T (in appendix B of this section) for a PTE during any testing of their control device.

(*5*) Sources utilizing a TTE must demonstrate that their TTE meets the requirements given in Procedure T (in appendix B of this section) for a TTE during testing of their control device. The source must also provide documentation that the quality assurance criteria for a TTE have been achieved.

(iv) *Control device efficiency testing and monitoring.* (A) The control device efficiency shall be determined by simultaneously measuring the inlet and outlet gas phase VOM concentrations and gas volumetric flow rates in accordance with the gas phase test methods specified in paragraph (a)(4)(vi) of this section.

(B) Any owner or operator that uses an afterburner or carbon adsorber to comply with any paragraph of § 52.741 shall use USEPA approved continuous monitoring equipment which is installed, calibrated, maintained, and operated according to vendor specifications at all times the afterburner or carbon adsorber is in use. The continuous monitoring equipment must monitor the following parameters:

(*1*) Combustion chamber temperature of each afterburner.

(*2*) Temperature rise across each catalytic afterburner bed or VOM concentration of exhaust.

(*3*) The VOM concentration of each carbon adsorption bed exhaust.

(v) *Overall efficiency.* (A) The overall efficiency of the emission control system shall be determined as the product of the capture system efficiency and the control device efficiency or by the liquid/liquid test protocol as specified in 40 CFR 60.433 (and revised by paragraph (a)(4)(iii)(A)(*2*) of this section for each solvent recovery system. In those cases in which the overall efficiency is being determined for an entire line, the capture efficiency used to calculate the product of the capture and control efficiency is the total capture efficiency over the entire line.

(B) For coating lines which are both chosen by the owner or operator to comply with paragraphs (e)(2)(ii), (e)(2)(iii), (e)(2)(iv), (e)(2)(v), or (e)(2)(vi) of this section by the alternative in paragraph (e)(2)(i)(B) of this section and meet the criteria allowing them to comply with paragraph (e)(2) of this section instead of paragraph (e)(1) of this section, the overall efficiency of the capture system and control device, as determined by the test methods and procedures specified in paragraphs (a)(4) (iii), (iv) and (v)(A) of this section, shall be no less than the equivalent overall efficiency which shall be calculated by the following equation:

$$E = ([VOM_a - VOM_1]/VOM_a) \times 100$$

Where:

E = Equivalent overall efficiency of the capture system and control device as a percentage,

VOM_a = Actual VOM content of a coating, or the daily-weighted average VOM content of two or more coatings (if more than one coating is used), as applied to the subject coating line as determined by the applicable test methods and procedures specified in paragraph (a)(4)(i) of this section in units of kg VOM/l (lb VOM/gal) of coating solids as applied,

VOM_1 = The VOM emission limit specified in paragraph (e)(2) (i) or (ii) of this section in units of kg VOM/l (lb VOM/gal) of coating solids as applied.

(vi) *Volatile organic material gas phase source test methods.* The methods in 40 CFR part 60, appendix A, delineated below shall be used to determine control device efficiencies.

(A) 40 CFR part 60, appendix A, Method 18, 25 or 25A, as appropriate to the conditions at the site, shall be used to determine VOM concentration. Method selection shall be based on consideration of the diversity of organic species present and their total concentration and on consideration of the potential presence of interfering gases. Except as indicated in paragraphs (a)(4)(vi)(A)(*1*) and (*2*) of this section, the test shall consist of three separate runs, each lasting a minimum of 60 min, unless the Administrator determines that process variables dictate shorter sampling times.

(*1*) When the method is to be used to determine the efficiency of a carbon adsoption system with a common exhaust stack for all the individual adsorber vessels, the test shall consist of three separate runs, each coinciding with one or more complete sequences through the adsorption cycles of all the individual adsorber vessels.

(*2*) When the method is to be used to determine the efficiency of a carbon adsorption system with individual exhaust stacks for each adsorber vessel, each adsorber vessel shall be tested individually. The test for each adsorber vessel shall consist of three separate runs. Each run shall coincide with one or more complete adsorption cycles.

(B) 40 CFR part 60, appendix A, Method 1 or 1A shall be used for sample and velocity traverses.

(C) 40 CFR part 60, appendix A, Method 2, 2A, 2C or 2D shall be used for velocity and volumetric flow rates.

(D) 40 CFR part 60, appendix A, Method 3 shall be used for gas analysis.

(E) 40 CFR part 60, appendix A, Method 4 shall be used for stack gas moisture.

(F) 40 CFR part 60, appendix A, Methods 2, 2A, 2C, 2D, 3 and 4 shall be performed, as applicable, at least twice during each test run.

(G) Use of an adaptation to any of the test methods specified in paragraphs (a)(4)(vi) (A), (B), (C), (D), (E), and (F) of this section may be approved by the Administrator on a case-by-case basis. An owner or operator must submit sufficient documentation for the Administrator to find that the test methods specified in paragraphs (a)(4)(vi) (A), (B), (C), (D), (E), and (F) of this section will yield inaccurate results and that the proposed adaptation is appropriate.

(vii) *Leak detection methods for volatile organic material.* Owners or operators required by the various subparts of this regulation to carry out a leak detection monitoring program shall comply with the following requirements:

(A) *Leak detection monitoring.* (*1*) Monitoring shall comply with 40 CFR part 60, appendix A. Method 21.

(*2*) The detection instrument shall meet the performance criteria of Method 21.

(*3*) The instrument shall be calibrated before use on each day of its use by the methods specified in Method 21.

(*4*) Calibration gases shall be:

(*i*) Zero air (less than 10 ppm of hydrocarbon in air); and

(*ii*) A mixture of methane or n-hexane and air at a concentration of approximately, but no less than, 10,000 ppm methane or n-hexane.

(*5*) The instrument probe shall be traversed around all potential leak interfaces as close to the interface as possible as described in Method 21.

(*B*) When equipment is tested for compliance with no detectable emissions as required, the test shall comply with the following requirements:

(*1*) The requirements of paragraphs (a)(4) (vii)(A)(*1*) through (vii)(A)(*5*) of this section shall apply.

(*2*) The background level shall be determined as set forth in Method 21.

(*C*) Leak detection tests shall be performed consistent with:

(*1*) "APTI Course SI 417 controlling Volatile Organic Compound Emissions from Leaking Process Equipment" EPA–450/2–82–015 (which is available for purchase from the National Technical Information Services, 5285 Port Royal Road, Springfield, VA 22161)

(*2*) "Portable Instrument User's Manual for Monitoring VOC Sources" EPA–340/1–86–015 (which is available for purchase from the National Technical Information Services, 5285 Port Royal Road, Springfield, VA 22161)

(*3*) "Protocols for Generating Unit-Specific Emission Estimates for Equipment Leaks of VOC and VHAP" EPA–450/3–88–010 (which is available for purchase from the National Technical Information Services, 5285 Port Royal Road, Springfield, VA 22161)

(*4*) "Petroleum Refinery Enforcement Manual" EPA–340/1–80–008 (which is available for purchase from the National Technical Information Services, 5285 Port Royal Road, Springfield, VA 22161)

(viii) *Bulk gasoline delivery system test protocol.* (A) The method for determining the emissions of gasoline from a vapor recovery system are delineated in 40 CFR part 60, subpart XX, § 60.503.

(B) Other tests shall be performed consistent with:

(*1*) "Inspection Manual for Control of Volatile Organic Emissions from Gasoline Marketing Operations: Appendix D" EPA–340/1–80–012 (which is available for purchase from the National Technical Information Services, 5285 Port Royal Road, Springfield, VA 22161)

(*2*) "Control of Hydrocarbons from Tank Truck Gasoline Loading Terminals: Appendix A" EPA–450/2–77–026 (which is available for purchase from the National Technical Information Services, 5285 Port Royal Road, Springfield, VA 22161)

(5) *Compliance dates.* Compliance with the requirements of all rules is required by July 1, 1991, unless otherwise indicated by compliance dates contained in specific rules. This paragraph shall not operate to provide additional time for compliance under section 113(d) of the Act, 42 U.S.C. 7413(d), for sources subject to compliance upon promulgation.

(6) *Afterburners.* The operation of any natural gas fired afterburner and capture system used to comply with § 52.741 is not required during the period of November 1 of any year to April 1 of the following year provided that the operation of such devices is not required for purposes of occupational safety or health, or for the control of toxic substances, odor nuisances, or other regulated pollutants.

(7) *Exemptions, variances, and alternative means of control or compliance determinations.* Notwithstanding the provisions of any other paragraphs of this section, any exemptions, variances or alternatives to the control requirements, emission limitations, or test methods in the Illinois SIP or FIP can only be allowed if approved by the Administrator as a SIP or FIP revision.

(8) *Vapor pressure of volatile organic liquids.* (i) If the VOL consists of only a single compound, the vapor pressure

shall be determined by ASTM Method D2879–86 (incorporated by reference as specified in 40 CFR 52.742) or the vapor pressure may be obtained from a published source such as: Boublik, T., V. Fried and E. Hala, "The Vapor Pressure of Pure Substances," Elsevier Scientific Publishing Co., New York (1973); Perry's Chemical Engineer's Handbook, McGraw-Hill Book Company (1984); CRC Handbook of Chemistry and Physics, Chemical Rubber Publishing Company (1986–87); and Lange's Handbook of Chemistry, John A. Dean, editor, McGraw-Hill Book Company (1985).

(ii) If the VOL is a mixture, the vapor pressure shall be determined by ASTM Method D2879–86 (incorporated by reference as specified in 40 CFR 52.742) or by the following equation:

$$P_{vol} = \sum_{i=1}^{n} P_i X_i$$

Where:

P_{vol}=Total vapor pressure of the mixture,
n=Number of components in the mixture,
i=Subscript denoting an individual component,
P_i=Vapor pressure of a component determined in accordance with paragraph (a) of this section
X_i=Mole fraction of the component in the total mixture.

(9) *Vapor pressure of organic material or solvent.* (i) If the organic material or solvent consists of only a single compound, the vapor pressure shall be determined by ASTM Method D2879–86 (incorporated by reference as specified in 40 CFR 52.742) or the vapor pressure may be obtained from a published source such as: Boublik, T., V. Fried and E. Hala, "The Vapor Pressure of Pure Substances," Elsevier Scientific Publishing Co., New York (1973); Perry's Chemical Engineer's Handbook, McGraw-Hill Book Company (1984); CRC Handbook of Chemistry and Physics, Chemical Rubber Publishing Company (1986–87); and Lange's Handbook of Chemistry, John A. Dean, editor, McGraw-Hill Book Company (1985).

(ii) If the organic material or solvent is in a mixture made up of both organic material compounds and compounds which are not organic material, the vapor pressure shall be determined by the following equation:

$$P_{om} = \frac{\sum_{i=1}^{n} P_i X_i}{\sum_{i=1}^{n} X_i}$$

Where:

P_{om}=Total vapor pressure of the portion of the mixture which is composed of organic material,
n=Number of organic material components in the mixture,
i=Subscript denoting an individual component,
P_i=Vapor pressure of an organic material component determined in accordance with paragraph (a) of this section,
X_i=Mole fraction of the organic material component of the total mixture.

(iii) If the organic material or solvent is in a mixture made up of only organic material compounds, the vapor pressure shall be determined by ASTM Method D2879–86 (incorporated by reference as specified in 40 CFR 52.742) or by the above equation.

(10) *Vapor pressure of volatile organic material.* (i) If the VOM consists of only a single compound, the vapor pressure shall be determined by ASTM Method D2879–86 (incorporated by reference as specified in 40 CFR 52.742) or the vapor pressure may be obtained from a published source such as: Boublik, T., V. Fried and E. Hala, "The Vapor Pressure of Pure Substances," Elsevier Scientific Publishing Co., New York (1973); Perry's Chemical Engineer's Handbook, McGraw-Hill Book Company (1984); CRC Handbook of Chemistry and Physics, Chemical Rubber Publishing Company (1986–87); and Lange's Handbook of Chemistry, John A. Dean, editor, McGraw-Hill Book Company (1985).

(ii) If the VOM is in a mixture made up of both VOM compounds and compounds which are not VOM, the vapor pressure shall be determined by the following equation:

$$P_{vom} = \frac{\sum_{i=1}^{n} P_i X_i}{\sum_{i=1}^{n} X_i}$$

Where:

P_{vom}=Total vapor pressure of the portion of the mixture which is composed of VOM,
n=Number of VOM components in the mixture,
i=Subscript denoting an individual component,
P_i=Vapor pressure of a VOM component determined in accordance with paragraph (a) of this section,
X_i=Mole fraction of the VOM component of the total mixture.

(iii) If the VOM is in a mixture made up of only VOM compounds, the vapor pressure shall be determined by ASTM Method D2879–86 (incorporated by reference as specified in 40 CFR 52.742) or by the above equation.

(b)–(c) [Reserved]

(d) *Solvent cleaning*—(1) *Solvent cleaning in general.* The requirements of subpart E (sections 215.182–215.184) of 35 Ill. Adm. Code 215 (incorporated by reference as specified in 40 CFR 52.742) shall apply to all cold cleaning, open top vapor degreasing, and conveyorized degreasing operations.

NOTE: For Federal purposes, paragraph (d)(1) supersedes subpart E (section 215.181) of 35 Ill. Adm. Code 215.)

(2) *Compliance schedule.* Every owner or operator of an emission source which was previously exempt from the requirements of subpart E (sections 215.182–215.184) of 35 Ill. Adm. Code 215 (incorporated by reference as specified in 40 CFR 52.742) because it satisfied the criteria in either (d)(a)(i) or (d)(2)(ii) of this section, shall comply with the requirements of subpart E (sections 215.182–215.184) of 35 Ill. Adm. Code 215 (incorporated by reference as specified in 40 CFR 52.742) on and after July 1, 1991. A source which did not satisfy the criteria in either (d)(a)(i) or (d)(2)(ii) of this section, shall comply with the requirements of subpart E (sections 215.182–215.184) of 35 Ill. Adm. Code 215 (incorporated by reference as specified in 40 CFR 52.742) upon promulgation.

(i) If emissions of VOM exceed neither 6.8 kg (15 lbs) in any one day, nor 1.4 kg (3 lbs) in any one hour, or

(ii) If the source is used exclusively for chemical or physical analysis or for determination of product quality and commercial acceptance, provided that the operation of the source is not an integral part of the production process, the emissions of VOM from the source do not exceed 363 kg (800 lbs) in any calendar month, and the exemption had been approved in writing by the Illinois Environmental Protection Agency.

(3) *Test methods.* The following test methods shall be used to demonstrate compliance with subpart E (sections 215.182–215.184) of 35 Ill. Adm. Code 215 (incorporated by reference as specified in 40 CFR 52.742):

(i) Vapor pressures shall be determined by using the procedure specified in paragraph (a)(9) of this section.

(ii) Exhaust ventilation rates shall be determined by using the procedures specified in paragraph (a)(4)(vi)(C) of this section.

(iii) The performance of control devices shall be determined by using the procedures specified in paragraph (a)(4)(vi) of this section.

(e) *Coating operations*—(1) *Emission limitations for manufacturing plants.* (i) Except as provided in paragraph (e)(3) of this section, no owner or operator of a coating line shall apply at any time any coating in which the VOM content exceeds the following emission limitations for the specified coating. The following emission limitations are expressed in units of VOM per volume of coating (minus water and any compounds which are specifically exempted from the definition of VOM) as applied at each coating applicator, except where noted. Compounds which are specifically exempted from the definition of VOM should be treated as water for the purpose of calculating the "less water" part of the coating composition. Compliance with this paragraph must be demonstrated through the applicable coating analysis test methods and procedures specified in paragraph (a)(4)(i) of this section and the recordkeeping and reporting requirements specified in paragraph (e)(6)(ii) of this section. As an alternative to compliance with this paragraph, the owner or operator of a coating line may meet the requirements of paragraph (e)(1)(ii) or paragraph (e)(2) of this section. The equation presented in paragraph (e)(1)(iii) of this section shall be used to calculate emission limitations for determining compliance by add-on controls, credits for transfer efficiency,

emissions trades and cross-line averaging.

	kg/l	lb/gal
(A) Automobile or Light-Duty Truck Coating		
(1) Prime coat	0.14	(1.2)
(2) Prime surfacer coat	0.34	(2.8)

NOTE: The prime surfacer coat limitation is based upon a transfer efficiency of 30 percent. Transfer efficiency credits can only be allowed if approved by the Administrator as a SIP or FIP revision.

(3) Topcoat	1.81	(15.1)

NOTE: The topcoat limitation is in units of kg (lbs) of VOM per l (gal) of coating solids deposited. Compliance with the limitation shall be based on the daily-weighted average VOM content from the entire topcoat operation (all topcoat spray booths, flash-off areas and bake ovens). Compliance shall be demonstrated in accordance with the topcoat protocol for automobiles and light-duty trucks referenced in paragraph (a)(4)(ii) of this section. Paragraph (e)(1)(ii) of this section does not apply to the topcoat limitation.) At least 180 days prior to the initial compliance date, the owner or operator of a coating line subject to the topcoat limitation shall submit to the Administrator a detailed proposal specifying the method of demonstrating compliance with the protocol. The proposal shall include, at a minimum, a comprehensive plan (including a rationale) for determining the transfer efficiency at each booth through the use of in-plant, or pilot testing; the selection of coatings to be tested (for the purpose of determining transfer efficiency) including the rationale for coating groupings; and the method for determining the analytic VOM content of as applied coatings and the formulation solvent content of as applied coatings. Upon approval of the protocol by the Administrator, the source may proceed with the compliance demonstration.

(4) Final repair coat	0.58	(4.8)
(B) Can Coating		
(1) Sheet basecoat and overvarnish	0.34	(2.8)
(2) Exterior basecoat and overvarnish	0.34	(2.8)
(3) Interior body spray coat	0.51	(4.2)
(4) Exterior end coat	0.51	(4.2)
(5) Side seam spray coat	0.66	(5.5)
(6) End sealing compound coat	0.44	(3.7)
(C) Paper Coating	0.35	(2.9)

NOTE: The paper coating limitation shall not apply to any owner or operator of any paper coating line on which printing is performed if the paper coating line complies with the emissions limitations in paragraph (h)(1) of this section: Printing and Publishing.

(D) Coil Coating	0.31	(2.6)
(E) Fabric Coating	0.35	(2.9)
(F) Vinyl Coating	0.45	(3.8)
(G) Metal Furniture Coating	0.36	(3.0)
(H) Large Appliance Coating	0.34	(2.8)

NOTE: The limitation shall not apply to the use of quick-drying lacquers for repair of scratches and nicks that occur during assembly, provided that the volume of coating does not exceed 0.95 l (1 quart) in any one rolling eight-hour period.

(I) Magnet Wire Coating	0.20	(1.7)
(J) Miscellaneous Metal Parts and Products Coating		
(1) Clear coating	0.52	(4.3)
(2) Air-dried coating	0.42	(3.5)
(3) Extreme performance coating	0.42	(3.5)
(4) Steel pail and drum interior coating	0.52	(4.3)
(5) All other coatings	0.36	(3.0)

	kg/l	lb/gal
(K) Heavy Off-Highway Vehicle Products Coating		
(1) Extreme performance prime coat	0.42	(3.5)
(2) Extreme performance top-coat (air dried)	0.42	(3.5)
(3) Final repair coat (air dried)	0.42	(3.5)

(4) All other coatings are subject to the emission limitations for miscellaneous metal parts and products coatings in paragraph (e)(1)(i)(J) of this section.

(L) Wood Furniture Coating		
(1) Clear topcoat	0.67	(5.6)
(2) Opaque stain	0.56	(4.7)
(3) Pigmented coat	0.60	(5.0)
(4) Repair coat	0.67	(5.6)
(5) Sealer	0.67	(5.6)
(6) Semi-transparent stain	0.79	(6.6)

	kg/l	lb/gal
(7) Wash coat	0.73	(6.1)

NOTE: An owner or operator of a wood furniture coating operation subject to this paragraph shall apply all coatings, with the exception of no more than 37.8 l (10 gal) of coating per day used for touch-up and repair operations, using one or more of the following application systems: airless spray application system, air-assisted airless spray application system, electrostatic spray application system, electrostatic bell or disc spray application system, heated airless spray application system, roller coating, brush or wipe coating application system, or dip coating application system.

(M) Existing Diesel-Electric Locomotive Coating Lines in Cook County		
(1) Extreme performance prime coat	0.42	(3.5)
(2) Extreme performance top-coat (air dried)	0.42	(3.5)
(3) Final repair coat (air dried)	0.42	(3.5)
(4) High-temperature aluminum coating	0.72	(6.0)
(5) All other coatings	0.36	(3.0)

(ii) *Daily-weighted average limitations.* No owner or operator of a coating line subject to the limitations of paragraph (e)(1)(i) of this section and complying by means of paragraph (e)(1)(ii) of this section shall operate the subject coating line unless the owner or operator has demonstrated compliance with paragraph (e)(1) (ii)(A), (ii)(B), (ii)(C), (ii)(D), (ii)(E) or (ii)(F) of this section (depending upon the source category) through the applicable coating analysis test methods and procedures specified in paragraph (a)(4)(i) of this section and the recordkeeping and reporting requirements specified in paragraph (e)(6)(iii) of this section.

(A) No owner or operator of a coating line subject to only one of the limitations from among paragraph (e)(1)(i)(A)*(1)*, (i)(A)*(2)*, (i)(A)*(4)*, (i)(C), (i)(D), (i)(E), (i)(F), (i)(G), (i)(H), or (i)(I) of this section shall apply coating on any such coating line, during any day, whose daily-weighted average VOM content exceeds the emission limitation to which the coatings are subject.

(B) No owner or operator of a miscellaneous metal parts and products coating line subject to the limitations of paragraph (e)(1)(i)(J) of this section shall apply coatings to miscellaneous metal parts or products on the subject coating line unless the requirements in paragraph (e)(1)(ii)(B) (*1*) or (*2*) of this section are met.

(*1*) For each coating line which applies multiple coatings, all of which are subject to the same numerical emission limitation within paragraph (e)(1)(i)(J) of this section, during the same day (*e.g.*, all coatings used on the line are subject to 0.42 kg/l [3.5 lbs/gal]), the daily-weighted average VOM content shall not exceed the coating VOM content limit corresponding to the category of coating used, or

(*2*) For each coating line which applies coatings from more than one of the four coating categories in paragraph (e)(1)(i)(J) of this section, during the same day, the owner or operator shall submit to and receive approval from the Administrator for a site-specific FIP revision. To receive approval, the requirements of USEPA's Emissions Trading Policy Statement (and related policy) must be satisfied.

(C) No owner or operator of a can coating facility subject to the limitations of pargraph (e)(1)(i)(B) of this section shall operate the subject coating facility using a coating with a VOM content in excess of the limitations specified in paragrpah (e)(1)(i)(B) of this section unless all of the following requirements are met:

(*1*) An alternative daily emission limitation shall be determined according to paragraph (e)(1)(ii)(C)(*2*) of this section. Actual daily emissions shall never exceed the alternative daily emission limitation and shall be calculated by use of the following equation.

$$E_d = \sum_{i=1}^{n} V_i C_i$$

Where:

E_d=Actual VOM emissions for the day in units of kg/day (lbs/day),

i=Subscript denoting a specific coating applied,

n=Total number of coatings applied in the can coating operation,

V_i=Volume of each coating applied for the day in units of l/day (gal/day) of coating (minus water and any compounds which

are specifically exempted from the definition of VOM), and

C_i=The VOM content of each coating as applied in units of kg VOM/l (lbs VOM/gal) of coating (minus water and any compounds which are specifically exempted from the definition of VOM).

(*2*) The alternative daily emission limitation (A_d) shall be determined on a daily basis as follows:

$$A_d = \sum_{i=1}^{n} \frac{V_i L_i (D_i - C_i)}{(D_i - L_i)}$$

Where:

A_d=The VOM emissions allowed for the day in units of kg/day (lbs/day),

i=Subscript denoting a specific coating applied,

n=Total number of surface coatings applied in the can coating operation,

C_i=The VOM content of each surface coating as applied in units of kg VOM/l (lbs VOM/gal) of coating (minus water and any compounds which are specifically exempted from the definition of VOM),

D_i=The density of VOM in each coating applied. For the purposes of calculating A_d, the density is 0.882 kg VOM/l VOM (7.36 lbs VOM/gal VOM),

V_i=Volume of each surface coating applied for the day in units of l (gal) of coating (minus water and any compounds which are specifically exempted from the definition of VOM),

L_i=The VOM emission limitation for each surface coating applied as specified in paragraph (e)(1)(i)(B) of this section in units of kg VOM/l (lbs VOM/gal) of coating (minus water and any compounds which are specifically exempted from the definition of VOM).

(D) No owner or operator of a heavy off-highway vehicle products coating line subject to the limitations of paragraph (e)(1)(i)(K) of this section shall apply coatings to heavy off-highway vehicle products on the subject coating line unless the requirements of paragraph (e)(1)(ii)(D) (*1*) or (*2*) of this section are met.

(*1*) For each coating line which applies multiple coatings, all of which are subject to the same numerical emission limitation within paragraph (e)(1)(i)(K) of this section, during the same day (*e.g.*, all coatings used on the line are subject to 0.42 kg/l [3.5 lbs/gal]), the daily-weighted average VOM content shall not exceed the coating VOM content limit corresponding to the category of coating used, or

(*2*) For each coating line which applies coatings subject to more than one numerical emission limitation in paragraph (e)(1)(i)(K) of this section, during the same day, the owner or operator shall submit to and receive approval from the Administrator for a site-specific FIP revision. To receive approval, the requirements of USEPA's Emissions Trading Policy Statement (and related policy) must be satisfied.

(E) No owner or operator of a wood furniture coating line subject to the limitations of paragraph (e)(1)(i)(L) of this section shall apply coatings to wood furniture on the subject coating line unless the requirements of paragraph (e)(1)(ii)(E) (*1*) or (*2*) of this section, in addition to the requirements specified in the note to paragraph (e)(1)(i)(L) of this section, are met.

(*1*) For each coating line which applies multiple coatings, all of which are subject to the same numerical emission limitation within paragraph (e)(1)(i)(L) of this section, during the same day (e.g., all coatings used on the line are subject to 0.67 kg/l [5.6 lbs/gal]), the daily-weighted average VOM content shall not exceed the coating VOM content limit corresponding to the category of coating used, or

(*2*) For each coating line which applies coatings subject to more than one numerical emission limitation in paragraph (e)(1)(i)(L) of this section, during the same day, the owner or operator shall submit to and receive approval from the Administrator for a site-specific FIP revision. To receive approval, the requirements of USEPA's Emissions Trading Policy Statement (and related policy) must be satisfied.

(F) No owner or operator of an existing diesel-electric locomotive coating line in Cook County, subject to the limitations of paragraph (e)(1)(i)(M) of this section shall apply coatings to diesel-electric locomotives on the subject coating line unless the requirements of paragraph (e)(1)(ii)(F) (*1*) or (*2*) of this section are met.

(*1*) For each coating line which applies multiple coatings, all of which are subject to the same numerical emission limitation within paragraph (e)(1)(i)(M) of this section, during the

same day (e.g., all coatings used on the line are subject to 0.42 kg/l [3.5 lbs/gal]), the daily-weighted average VOM content shall not exceed the coating VOM content limit corresponding to the category of coating used, or

(*2*) For each coating line which applies coatings subject to more than one numerical emission limitation in paragraph (e)(1)(i)(M) of this section, during the same day, the owner or operator shall submit to and receive approval from the Administrator for a site-specific FIP revision. To receive approval, the requirements of USEPA's Emissions Trading Policy Statement (and related policy) must be satisfied.

(iii) Limitations in terms of kg (lbs) of VOM emissions per l (gal) of solids as applied at each coating applicator shall be determined by the following equation:

$$S = \frac{C}{1 - \left(\frac{C}{D}\right)}$$

Where:

S=The limitation on VOM emissions in terms of kg VOM/l (lbs VOM/gal) of solids,

C=The limitation on VOM emissions in terms of kg/l (lbs/gal) of coating (minus water and any compounds which are specifically excluded from the definition of VOM) specified in paragraph (e)(1)(i) of this section,

D=The density of VOM in the coating. For the purposes of calculating S, the density is 0.882 kg VOM/l VOM (7.36 lbs VOM/gal VOM).

(2) *Alternative emission limitations.* Any owner or operator of a coating line subject to paragraph (e)(1) of this section may comply with this paragraph, rather than with paragraph (e)(1) of this section, if a capture system and control device are operated at all times and the owner or operator demonstrates compliance with paragraphs (e)(2) (ii), (iii), (iv), (v), (vi) or (vii) of this section (depending upon the source category) through the applicable coating analysis and capture system and control device efficiency test methods and procedures specified in paragraph (a)(4) of this section and the recordkeeping and reporting requirements specified in paragraph (e)(6)(iv) of this section; and the control device is equipped with the applicable monitoring equipment specified in paragraph (a)(4)(iv) of this section and the monitoring equipment is installed, calibrated, operated and maintained according to vendor specifications at all times the control device is in use. The use of a capture system and control device, which does not demonstrate compliance with paragraph (e)(2) (ii), (iii), (iv), (v), (vi), or (vii), may only be used as an alternative to compliance with paragraph (e)(1) of this section if approved as a FIP revision.

(i) *Alternative add-on control methodologies.* (A) The coating line is equipped with a capture system and control device that provides 81 percent reduction in the overall emissions of VOM from the coating line and the control device has a 90 percent efficiency, or

(B) The system used to control VOM from the coating line is demonstrated to have an overall efficiency sufficient to limit VOM emissions to no more than what is allowed under paragraph (e)(1) of this section. Use of any control system other than an afterburner, carbon absorption, condensation, or absorption scrubber system can only be allowed if approved by the Administrator as a SIP or FIP revision. Transfer efficiency credits can only be allowed if approved by the Administrator as a SIP or FIP revision. Baseline transfer efficiencies and transfer efficiency test methods must be approved by the Administrator.

Such overall efficiency is to be determined as follows:

(*1*) Obtain the emission limitation from the appropriate paragraph in (e)(1) of this section,

(*2*) Calculate "S" according to the equation in paragraph (e)(1)(iii) of this section,

(*3*) Calculate the overall efficiency required according to paragraph (a)(4)(v) of this section. For the purposes of calculating this value, according to the equation in (a)(4)(v)(B) of this section VOM_I is equal to the value of "S" as determined above in (i)(B)(*2*).

(ii) No owner or operator of a coating line subject to only one of the emission limitations from among paragraph (e)(1)(i)(A)(*1*), (e)(1)(i)(A)(*2*),

(e)(1)(i)(A)(*4*), (e)(1)(i)(C), (e)(1)(i)(D), (e)(1)(i)(E), (e)(1)(i)(F), (e)(1)(i)(G), (e)(1)(i)(H), or (e)(1)(i)(I) of this section and equipped with a capture system and control device shall operate the subject coating line unless the requirements in paragraph (e)(2)(i) (A) or (B) of this section are met. No owner or operator of a coating line subject to paragraph (e)(1)(i)(A)(*3*) of this section and equipped with a capture system and control device shall operate the coating line unless the owner or operator demonstrates compliance with the topcoat limitation in accordance with the topcoat protocol for automobile or light-duty trucks referenced in paragraph (a)(4)(ii) of this section.

(iii) No owner or operator of a miscellaneous metal parts and products coating line which applies one or more coatings during the same day, all of which are subject to the same numerical emission limitation within paragraph (e)(1)(i)(J) of this section (e.g., all coatings used on the line are subject to 0.42 kg/l [3.5 lbs/gal]), and which is equipped with a capture system and control device shall operate the subject coating line unless the requirements in paragraph (e)(2)(i) (A) or (B) of this section are met.

(iv) No owner or operator of a heavy off-highway vehicle products coating line which applies one or more coatings during the same day, all of which are subject to the same numerical emission limitation within paragraph (e)(1)(i)(K) of this section (e.g., all coatings used on the line are subject to 0.42 kg/l [3.5 lbs/gal]), and which is equipped with a capture system and control device shall operate the subject coating line unless the requirements in paragraph (e)(2)(i) (A) or (B) of this section are met.

(v) No owner or operator of an existing diesel-electric locomotive coating line in Cook County which applies one or more coatings during the same day, all of which are subject to the same numerical emission limitation within paragraph (e)(1)(i)(M) of this section (e.g., all coatings used on the line are subject to 0.42 kg/l [3.5 lbs/gals]), and which is equipped with a capture system and control device shall operate the subject coating line unless the requirements in paragraph (e)(2)(i) (A) or (B) of this section are met.

(vi) No owner or operator of a wood furniture coating line which applies one or more coatings during the same day, all of which are subject to the same numerical emission limitation within paragraph (e)(1)(i)(L) (*e.g.*, all coatings used on the line are subject to 0.67 kg/l [5.6 lbs/gal]), and which is equipped with a capture system and control device shall operate the subject coating line unless the requirements in paragraph (e)(2)(i) (A) or (B) of this section are met. If compliance is achieved by meeting the requirements in paragraph (e)(2)(i)(B) of this section, then the provisions in the note to paragraph (e)(1)(i)(L) of this section must also be met.

(vii) No owner or operator of a can coating facility and equipped with a capture system and control device shall operate the subject coating facility unless the requirements in paragraph (e)(2)(vii) (A) or (B) of this section are met.

(A) An alternative daily emission limitation shall be determined according to paragraph (e)(1)(ii)(C)(*2*) of this section. Actual daily emissions shall never exceed the alternative daily emission limitation and shall be calculated by use of the following equation:

$$E_d = \sum_{i=1}^{n} V_i C_i \left(1 - F_i\right)$$

Where:

E_d=Actual VOM emissions for the day in units of kg/day (lbs/day),

i=Subscript denoting the specific coating applied,

n=Total number of surface coatings as applied in the can coating operation,

V_i=Volume of each coating as applied for the day in units of 1/day (gal/day) of coating (minus water and any compounds which are specifically exempted from the definition of VOM),

C_i=The VOM content of each coating as applied in units of kg VOM/l (lbs VOM/gal) of coating (minus water and any compounds which are specifically exempted from the definition of VOM), and

F_i=Fraction, by weight, of VOM emissions from the surface coating, reduced or prevented from being emitted to the ambient air. This is the overall efficiency of the capture system and control device.

(B) The coating line is equipped with a capture system and control device that provide 75 percent reduction in the overall emissions of VOM from the coating line and the control device has a 90 percent efficiency.

(3) *Exemptions from emission limitations*—(i) *Exemptions for all source categories except wood furniture coating.* The limitations of paragraph (e) of this section shall not apply to coating lines within a facility, that otherwise would be subject to the same subparagraph of paragraph (e)(1)(i) of this section (because they belong to the same source category, e.g. can coating), provided that combined actual emissions of VOM from all lines at the facility subject to that subparagraph never exceed 6.8 kg/day (15 lbs/day) before the application of capture systems and control devices. (For example, can coating lines within a plant would not be subject to the limitations of subparagraph (e)(1)(i)(B) of this section if the combined actual emissions of VOM from the can coating lines never exceed 6.8 kg/day (15 lbs/day) before the application of capture systems and control devices.) Volatile organic material emissions from heavy off-highway vehicle products coating lines must be combined with VOM emissions from miscellaneous metal parts and products coating lines to determine applicability. Any owner or operator of a coating facility shall comply with the applicable coating analysis test methods and procedures specified in paragraph (a)(4)(i) of this section and the recordkeeping and reporting requirements specified in paragraph (e)(6)(i) of this section if total VOM emissions from the subject coating lines are always less than or equal to 6.8 kg/day (15 lbs/day) before the application of capture systems and control devices and, therefore, are not subject to the limitations of paragraph (e)(1) of this section. Once a category of coating lines at a facility is subject to the limitations in paragraph (e)(1) of this section, the coating lines are always subject to the limitations in paragraph (e)(1) of this section.

(ii) *Applicability for wood furniture coating.* (A) The limitations of paragraph (e) of this section shall apply to a plant's wood furniture coating lines if the plant contains process emission sources, not regulated by paragraphs (d), (e) (excluding paragraph (e)(1)(i)(L)), (h) (excluding paragraph (h)(5)), (i), (j), or (q)(1), or subparts B, Q (excluding sections 215.432 and 215.436), R (excluding sections 215.447, 215.450, and 215.452), S, V, X, Y (sections 215.582–215.584), or Z of 35 Ill. Adm. Code 215 (incorporated by reference as specified in 40 CFR 52.742), which as a group both:

(*1*) Have maximum theoretical emissions of 91 Mg (100 tons) or more per calendar year of VOM if no air pollution control equipment were used, and

(*2*) Are not limited to less than 91 Mg (100 tons) of VOM per calendar year if no air pollution control equipment were used, through production or capacity limitations contained in a federally enforceable construction permit or SIP or FIP version.

(B) If a plant ceases to fulfill the criteria of paragraph (e)(3)(ii)(A) of this section, the limitations of paragraph (e)(1)(i)(L) of this section shall continue to apply to any wood furniture coating line which was ever subject to the limitations of paragraph (e)(1)(i)(L) of this section.

(C) For the purposes of paragraph (e)(3)(ii) of this section, an emission source shall be considered regulated by a subpart (of the Illinois rules), section, or paragraph if it is subject to the limitations of that subpart (of the Illinois rules), section, or paragraph. An emission source is not considered regulated by a subpart (of the Illinois rules), section, or paragraph if its emissions are below the applicability cutoff level or if the source is covered by an exemption.

(D) Any owner or operator of a wood furniture coating line to which the limitations of paragraph (e) of this section are not applicable due to the criteria in paragraph (e)(3)(ii) of this section shall, upon request by the Administrator, submit records to the Administrator within 30 calendar days from the date of the request that document that the coating line is exempt from the limitations of paragraph (e) of this section.

(4) *Exemption from general rule on use of organic material.* No owner or operator of a coating line subject to the limitations of paragraph (e)(1) of this

section is required to meet the limitations of subpart K (section 215.301 or 215.302) of 35 Ill. Adm. Code 215 (incorporated by reference as specified in 40 CFR 52.742), after the date by which the coating line is required to meet paragraph (e)(1) of this section.

(5) *Compliance schedule.* Except as specified in paragraph (e)(7) of this section, every owner or operator of a coating line (of a type included within paragraph (e)(1)(i) of this section) shall comply with the requirements of paragraph (e)(1),(e)(2) or (e)(3) of this section and paragraph (e)(6) of this section in accordance with the appropriate compliance schedule as specified in paragraph (e)(5)(i),(ii),(iii) or (iv) of this section.

(i) No owner or operator of a coating line which is exempt from the limitations of paragraph (e)(1) of this section because of the criteria in paragraph (e)(3)(i) of this section shall operate said coating line on or after July 1, 1991, unless the owner or operator has complied with, and continues to comply with, paragraph (e)(6)(i) of this section. Wood furniture coating lines are not subject to paragraph (e)(6)(i) of this section.

(ii) No owner or operator of a coating line complying by means of paragraph (e)(1)(i) of this section shall operate said coating line on or after July 1, 1991, unless the owner or operator has complied with, and continues to comply with, paragraphs (e)(1)(i) and (e)(6)(ii) of this section.

(iii) No owner or operator of a coating line complying by means of paragraph (e)(1)(ii) of this section shall operate said coating line on or after July 1, 1991, unless the owner or operator has complied with, and continues to comply with, paragraphs (e)(1)(ii) and (e)(6)(iii) of this section.

(iv) No owner or operator of a coating line complying by means of paragraph (e)(2) of this section shall operate said coating line on or after July 1, 1991, unless the owner or operator has complied with, and continues to comply with, paragraphs (e)(2) and (e)(6)(iv) of this section.

(6) *Recordkeeping and reporting.* The VOM content of each coating and the efficiency of each capture system and control device shall be determined by the applicable test methods and procedures specified in paragraph (a)(4) of this section to establish the records required under paragraph (e)(6) of this section.

(i) Any owner or operator of a coating line which is exempted from the limitations of paragraph (e)(1) of this section because of paragraph (e)(3)(i) of this section shall comply with the following:

(A) By July 1, 1991, the owner or operator of a facility referenced in paragraph (e)(6)(i) of this section shall certify to the Administrator that the facility is exempt under the provisions of paragraph (e)(3)(i) of this section. Such certification shall include:

(*1*) A declaration that the facility is exempt from the limitations of paragraph (e)(1) of this section because of paragraph (e)(3)(i) of this section; and

(*2*) Calculations which demonstrate that the combined VOM emissions from all coating lines at the facility never exceed 6.8 kg (15 lbs) per day before the application of capture systems and control devices. The following equation shall be used to calculate total VOM emissions:

$$T_e = \sum_{j=1}^{m} \sum_{i=1}^{n} \left(A_i B_i\right) j$$

Where:

T_e=Total VOM emissions from coating lines at a facility each day before the application of capture systems and control devices in units of kg/day (lbs/day),

m=Number of coating lines at the facility,

j=Subscript denoting an individual coating line,

n=Number of different coatings as applied each day on each coating line at the facility,

i=Subscript denoting an individual coating,

A_i=Weight of VOM per volume of each coating (minus water and any compounds which are specifically exempted from the definition of VOM) as applied each day on each coating line at the facility in units of kg VOM/l (lbs VOM/gal), and

B_i=Volume of each coating (minus water and any compounds which are specifically exempted from the definition of VOM) as applied each day on each coating line at the facility in units of l/day (gal/day). The instrument or method by which the owner or operator accurately measured or calculated the volume of each coating as applied on each coating line each day shall be

described in the certification to the Administrator.

(B) On and after July 1, 1991, the owner or operator of a facility referenced in paragraph (e)(6)(i) of this section shall collect and record all of the following information each day for each coating line and maintain the information at the facility for a period of three years:

(*1*) The name and identification number of each coating as applied on each coating line.

(*2*) The weight of VOM per volume and the volume of each coating (minus water and any compounds which are specifically exempted from the definition of VOM) as applied each day on each coating line.

(C) On and after July 1, 1991, the owner or operator of a facility exempted from the limitations of paragraph (e)(1) of this section because of paragraph (e)(3)(i) of this section shall notify the Administrator of any record showing that total VOM emissions from the coating facility exceed 6.8 kg (15 lbs) in any day before the application of capture systems and control devices shall be reported by sending a copy of such record to the Administrator within 30 days after the exceedance occurs.

(ii) Any owner or operator of a coating line subject to the limitations of paragraph (e)(1) of this section and complying by means of paragraph (e)(1)(i) of this section shall comply with the following:

(A) By July 1, 1991, or upon initial start-up of a new coating line, or upon changing the method of compliance from an existing subject coating line from paragraph (e)(1)(ii) or paragraph (e)(2) to paragraph (e)(1)(i) of this section; the owner or operator of a subject coating line shall certify to the Administrator that the coating line will be in compliance with paragraph (e)(1)(i) of this section on and after July 1, 1991, or on and after the initial start-up date. Such certification shall include:

(*1*) The name and identification number of each coating as applied on each coating line.

(*2*) The weight of VOM per volume of each coating (minus water and any compounds which are specifically exempted from the definition of VOM) as applied each day on each coating line.

(*3*) For coating lines subject to paragraph (e)(1)(i)(A)(*3*) of this section, certification shall include:

(*i*) The name and identification number of each coating line which will comply by means of paragraph (e)(1)(i)(A)(*3*) of this section,

(*ii*) The name and identification number of each coating as applied on each coating line,

(*iii*) The weight of VOM per volume of each coating as applied on each coating line,

(*iv*) The instrument or method by which the owner or operator will accurately measure or calculate the volume of each coating as applied each day on each coating line,

(*v*) The method by which the owner or operator will create and maintain records each day as required in paragraph (e)(6)(ii)(B) of this section for coating lines subject to paragraph (e)(1)(i)(A)(*3*) of this section,

(*vi*) An example format in which the records required in paragraph (e)(6)(ii)(B) of this section for coating lines subject to paragraph (e)(1)(i)(A)(*3*) of this section.

(B) On and after July 1, 1991, or on and after the initial start-up date, the owner or operator of a coating line subject to the limitations of paragraph (e)(1) of this section and complying by means of paragraph (e)(1)(i) of this section shall collect and record all of the following information each day for each coating line and maintain the information at the facility for a period of three years:

(*1*) The name and identification number of each coating as applied on each coating line.

(*2*) The weight of VOM per volume of each coating (minus water and any compounds which are specifically exempted from the definition of VOM) as applied each day on each coating line.

(*3*) For coating lines subject to paragraph (e)(1)(i)(A)(*3*) of this section, the owner or operator shall maintain all records necessary to calculate the daily-weighted average VOM content from the coating line in accordance with the proposal submitted, and approved by the Administrator, pursuant to paragraph (e)(1)(A)(*3*) of this section.

(C) On and after July 1, 1991, the owner or operator of a subject coating line shall notify the Administrator in the following instances:

(*1*) Any record showing violation of paragraph (e)(1)(i) of this section shall be reported by sending a copy of such record to the Administrator within 30 days following the occurrence of the violation, except that any record showing a violation of paragraph (e)(1)(i)(A)(*3*) of this section shall be reported by sending a copy of such record to the Administrator within 15 days from the end of the month in which the violation occurred.

(*2*) At least 30 calendar days before changing the method of compliance with paragraph (e)(1) of this section from paragraph (e)(1)(i) to paragraph (e)(1)(ii) or paragraph (e)(2) of this section, the owner or operator shall comply with all requirements of paragraph (e)(6) (iii)(A) or (iv)(A) of this section, respectively. Upon changing the method of compliance with paragraph (e)(1) of this section from paragraph (e)(1)(i) to paragraph (e)(1)(ii) or paragraph (e)(2) of this section, the owner or operator shall comply with all requirements of paragraph (e)(6) (iii) or (iv) of this section, respectively.

(*3*) For coating lines subject to paragraph (e)(1)(i)(A)(*3*) of this section, the owner or operator shall notify the Administrator of any change to the topcoating operation at least 30 days before the change is effected. The Administrator shall determine whether or not recertification testing is required. If the Administrator determines that recertification testing is required, then the owner or operator shall submit a proposal to the Administrator to test within 30 days and retest within 30 days of the Administrator's approval of the proposal.

(iii) Any owner or operator of a coating line subject to the limitations of paragraph (e)(1) of this section and complying by means of paragraph (e)(1)(ii) of this section shall comply with the following:

(A) By July 1, 1991, or upon initial start-up of a new coating line, or upon changing the method of compliance for an existing subject coating line from paragraph (e)(1)(i) or paragraph (e)(2) to paragraph (e)(1)(ii) of this section; the owner or operator of the subject coating line shall certify to the Administrator that the coating line will be in compliance with paragraph (e)(1)(ii) of this section on and after July 1, 1991, or on and after the initial start-up date. Such certification shall include:

(*1*) The name and identification number of each coating line which will comply by means of paragraph (e)(1)(ii) of this section.

(*2*) The name and identification number of each coating as applied on each coating line.

(*3*) The weight of VOM per volume and the volume of each coating (minus water and any compounds which are specifically exempted from the definition of VOM) as applied each day on each coating line.

(*4*) The instrument or method by which the owner or operator will accurately measure or calculate the volume of each coating as applied each day on each coating line.

(*5*) The method by which the owner or operator will create and maintain records each day as required in paragraph (e)(6)(iii)(B) of this section.

(*6*) An example of the format in which the records required in paragraph (e)(6)(iii)(B) of this section will be kept.

(B) On and after July 1, 1991, or on and after the initial start-up date, the owner or operator of a coating line subject to the limitations of paragraph (e)(1) of this section and complying by means of paragraph (e)(1)(ii) of this section, shall collect and record all of the following information each day for each coating line and maintain the information at the facility for a period of three years:

(*1*) The name and identification number of each coating as applied on each coating line.

(*2*) The weight of VOM per volume and the volume of each coating (minus water and any compounds which are specifically exempted from the definition of VOM) as applied each day on each coating line.

(*3*) The daily-weighted average VOM content of all coatings as applied on each coating line as defined in paragraph (a)(3) of this section.

(C) On and after July 1, 1991, the owner or operator of a subject coating

line shall notify the Administrator in the following instances:

(*1*) Any record showing violation of paragraph (e)(1)(ii) of this section shall be reported by sending a copy of such record to the Administrator within 30 days following the occurrence of the violation.

(*2*) At least 30 calendar days before changing the method of compliance with paragraph (e) from paragraph (e)(1)(ii) to paragraph (e)(1)(i) or paragraph (e)(2) of this section, the owner or operator shall comply with all requirements of paragraph (e)(6)(ii)(A) or (iv)(A), respectively. Upon changing the method of compliance with paragraph (e) from paragraph (e)(1)(ii) to paragraph (e)(1)(i) or paragraph (e)(2) of this section, the owner or operator shall comply with all requirements of paragraph (e)(6)(ii) or (iv), respectively.

(iv) Any operator or owner of a coating line subject to the limitations of paragraph (e)(2) of this section and complying by means of paragraph (e)(2)(ii), (iii), (iv), (v), (vi) or (vii) of this section shall comply with the following:

(A) By July 1, 1991, or upon initial start-up of a new coating line, or upon changing the method of compliance for an existing coating line from paragraph (e)(1) (i) or (ii) to paragraph (e)(2) of this section; the owner or operator of the subject coating line shall perform all tests and submit to the Administrator the results of all tests and calculations necessary to demonstrate that the subject coating line will be in compliance with paragraph (e)(2) of this section on and after July 1, 1991, or on and after the initial start-up date.

(B) On and after July 1, 1991, or on and after the initial start-up date, the owner or operator of a coating line subject to the limitations of paragraph (e)(2) of this section and complying by means of paragraph (e)(2) (ii), (iii), (iv), (v), (vi) or (vii) of this section shall collect and record all of the following information each day for each coating line and maintain the information at the facility for a period of three years:

(*1*) The weight of VOM per volume of coating solids as applied each day on each coating line, if complying pursuant to paragraph (e)(2)(i)(B) of this section.

(*2*) Control device monitoring data.

(*3*) A log operating time for the capture system, control device, monitoring equipment and the associated coating line.

(*4*) A maintenance log for the capture system, control device and monitoring equipment detailing all routine and non-routine maintenance performed including dates and duration of any outages.

(C) On and after July 1, 1991, the owner or operator of a subject coating line shall notify the Administrator in the following instances:

(*1*) Any record showing violation of paragraph (e)(2) of this section shall be reported by sending a copy of such record to the Administrator within 30 days following the occurrence of the violation.

(*2*) At least 30 calendar days before changing the method of compliance with paragraph (e) from paragraph (e)(2) to paragraph (e)(1)(i) or paragraph (e)(1)(ii) of this section, the owner or operator shall comply with all requirements of paragraph (e)(6)(ii)(A) or (iii)(A) of this section, respectively. Upon changing the method of compliance with paragraph (e) from paragraph (e)(2) to paragraph (e)(1)(i) or paragraph (e)(1)(ii) of this section, the owner or operator shall comply with all requirements of paragraph (e)(6)(ii) or (iii) of this section, respectively.

(7) *Compliance schedule for diesel electric locomotive coatings.* Notwithstanding any other provision of this subpart, the compliance date for the emission limitations and standards for "topcoat" and "final repair coat" operations only as applied to General Motors Corporation at their diesel electric locomotive coating lines in Cook County, Illinois, codified at 40 CFR 52.741(e)(1)(i)(M) (*2*) and (*3*) is specified in this paragraph (e)(7). Compliance with the requirements of paragraph (e)(1), (e)(2) or (e)(3) of this section and paragraph (e)(6) of this section must be in accordance with the appropriate compliance schedule as specified in paragraph (e)(7)(i),(ii),(iii), or (iv) of this section.

(i) No owner or operator of a coating line which is exempt from the limitations of paragraph (e)(1) of this section

because of the criteria in paragraph (e)(3)(i) of this section shall operate said coating line on or after March 25, 1995, unless the owner or operator has complied with, and continues to comply with, paragraph (e)(6)(i) of this section.

(ii) No owner or operator of a coating line complying by means of paragraph (e)(1)(i) of this section shall operate said coating line on or after March 25, 1995, unless the owner or operator has complied with, and continues to comply with, paragraph (e)(1)(i) and (e)(6)(ii) of this section.

(iii) No owner or operator of a coating line complying by means of paragraph (e)(1)(ii) of this section shall operate said coating line on or after March 25, 1995, unless the owner or operator has complied with, and continues to comply with, paragraphs (e)(1)(ii) and (e)(6)(iii) of this section.

(iv) No owner or operator of a coating line complying by means of paragraph (e)(2) of this section shall operate said coating line on or after March 25, 1995, unless the owner or operator has complied with, and continues to comply with, paragraphs (e)(2) and (e)(6)(iv) of this section.

(8) The control requirements in this paragraph apply to the wood coating line, which coats wooden globe stand components, at Replogle Globes, Inc. (Replogle) Broadview facility in Cook County, Illinois, instead of the control requirements in paragraphs (e)(1) and (e)(2) of this section. Compliance with this paragraph must be demonstrated through the applicable coating analysis test methods and procedures specified in paragraph (a)(4)(i) of this section.

(i) After October 6, 1991, no coatings shall at any time be applied which exceed the following emission limitations for the specified coating.

(A) 6.59 pounds (lbs) Volatile Organic Material (VOM) per gallon of stain (minus water and any compounds which are specifically exempted from the definition of VOM) as applied to coat wooden globe stand components. Such stain consists of #9250 Walnut NGR Stain (RGI # W06000100), #9974 Cherry NGR Stain (RGI # W06003500) and #9943 Ash NGR Stain (RGI # W06003600). The Administrator must be notified at least ten (10) days prior to the use of any replacement stains.

(B) 5.53 lbs VOM per gallon of Sanding Sealer (minus water and any compounds which are specifically exempted from the definition of VOM) as applied to coat wooden globe stand components. Such sealer consists of #15304 High Build Sanding Sealer (RGI # W06003700). The Administrator must be notified at least ten (10) days prior to the use of any replacement sanding sealer.

(C) 5.20 lbs VOM per gallon of lacquer (minus water and any compounds which are specifically exempted from the definition of VOM) as applied to coat wooden globe stand components. Such lacquer consists of #15352 High Build Lacquer (RGI # W06003300). The Administrator shall be notified at least ten (10) days prior to the use of any replacement lacquer.

(ii) After October 6, 1991, the volume of coatings used shall not exceed the following:

(A) 5,000 gallons per year total for all coatings specified in paragraph (e)(8)(i)(A) of this section. The yearly volume of coatings used are to be calculated as follows:

(*1*) Compute the volume of specified coating used each month by the 15th of the following month.

(*2*) By the 15th of each month, add the monthly coating use for the 12 previous months (to obtain the yearly volume of coatings used).

(B) 4,000 gallons per year total for all coatings specified in paragraph (e)(8)(i)(B) of this section. The yearly volume of the coatings used are to be calculated as specified in paragraphs (e)(8)(ii)(A)(1) and (e)(8)(ii)(A)(2) of this section.

(C) 5,000 gallons per year total for all coatings specified in paragraph (e)(8)(i)(C) of this section. The yearly volume of coatings used are to be calculated as specified in paragraphs (e)(8)(ii)(A)(1) and (e)(8)(ii)(A)(2) of this section.

(iii) Beginning on October 6, 1991, the owner and operator of the Replogle Globes, Inc. plant in Broadview, Illinois shall keep the following records for each month. All records shall be retained at Replogle Globes, Inc. for

three (3) years and shall be made available to the Administrator on request.

(A) the name and identification number of each coating as applied on any wood coating line.

(B) The weight of VOM per volume (determined in accordance with the procedures in paragraph (a)(4)(i) of this section) and the volume of each coating (minus water and any compounds which are specifically exempted from the definition of VOM) as applied each month on any wood coating line.

(9) [Reserved]

(10) Until December 31, 1996, the control and recordkeeping requirements in this paragraph apply to the three solvent-based polyester paper coating lines (Lines C, D and E) at Riverside Laboratories' Kane County, Illinois facility, instead of the control requirements in paragraphs (e)(1) and (e)(2) of this section and the recordkeeping requirements in paragraph (e)(6) of this section. Compliance with this paragraph must be demonstrated through the applicable coating analysis test methods and procedures specified in paragraph (a)(4)(i) of this section. The requirements in paragraphs (e)(1), (e)(2), and (e)(6) of this section shall apply to Riverside on and after December 31, 1996.

(i) After December 21, 1995, no coatings shall at any time be applied on Lines C, D or E which exceed 3.5 pounds (lbs.) volatile organic material (VOM) per gallon of coating (minus water and any compounds which are specifically exempted from the definition of VOM), except as provided in paragraph (e)(10)(ii) of this section.

(ii) After December 21, 1995, the following specifically identified coatings may exceed 3.5 lbs. VOM per gallon of coating (minus water and any compounds which are specifically exempted from the definition of VOM) only if they are applied on Line E and they do not exceed the limits indicated below (minus water and any compounds which are specifically exempted from the definition of VOM):

EXP–5027—4.34 lbs./gallon
PD 75 CLR—4.19 lbs./gallon
PD 75 BRN—4.18 lbs./gallon
SQZ–54—3.88 lbs./gallon
SPX–34GL—3.51 lbs./gallon

(iii) That portion of Riverside's polyester production which is manufactured with the use of any VOC, from Lines C, D, and E, may not exceed the following levels: 35 million square feet per year during and after 1992, 29 million square feet per year during and after 1994, and 25 million square feet during 1996. Compliance with this requirement shall be determined by adding the polyester production from any 12 consecutive months during and after the years indicated, through 1996. That is, the polyester production for any 12 consecutive months starting with January 1992 cannot exceed 35 million square feet; the polyester production from any 12 consecutive months starting with January 1994 cannot exceed 29 million square feet; and the polyester production for the twelve months from January through December 1996 cannot exceed 25 million square feet. Only those square feet of polyester whose production involves the use of VOC need to be restricted by the production levels in this paragraph (e)(10)(iii) of this section.

(iv) By December 21, 1995, Riverside shall certify to the Administrator that its polyester coating operations will be in compliance with paragraphs (e)(10)(i), (e)(10)(ii), and (e)(10)(iii) of this section. Such certification shall include the following:

(A) The name and identification number of each coating as applied on coating lines C, D and E.

(B) The weight of VOM per volume of each coating (minus water and any compounds which are specifically exempted from the definition of VOM) as applied on each coating line.

(v) The Administrator must be notified at least 10 days prior to the use of any polyester coating not previously identified pursuant to paragraph (e)(10)(iv) of this section. This notification must include the information specified in paragraphs (e)(10)(iv)(A) and (e)(10)(iv)(B) of this section.

(vi) On and after December 21, 1995, Riverside shall collect and record all of the following information each day for each coating and maintain the information at the facility for a period of 3 years:

(A) The name and identification number of each coating as applied.

(B) The weight of VOM per volume of each coating (minus water and any compounds which are specifically exempted from the definition of VOM) as applied each day.

(C) Any record showing a VOM content in excess of the emission limits in paragraph (e)(10)(i) or (e)(10)(ii) of this section shall be reported by sending a copy of such record to the Administrator within 30 days following its collection.

(D) Any VOM besides acetone used in any coating must be identified.

(vii) Starting with the first full month after December 21, 1995, Riverside shall collect and record the figures on polyester production (in square feet), for each month and maintain the information at the facility for a period of at least 3 years.

(viii) Regardless of any other provision of paragraph (e)(10) of this section, after August 21, 1995 no coating which contains any VOM other than acetone shall at any time be applied on Line C, D, or E which exceeds 2.9 lbs. VOM per gallon of coating (minus water and any compounds which are specifically exempted from the definition of VOM).

(f)–(g) [Reserved]

(h) *Printing and publishing*—(1) *Flexographic and rotogravure printing.* (i) No owner or operator of a subject flexographic, packaging rotogravure or publication rotogravure printing line shall apply at any time any coating or ink unless the VOM content does not exceed the limitation specified in either paragraph (h)(1)(i)(A) or (B) of this section. Compliance with this paragraph must be demonstrated through the applicable coating or ink analysis test methods and procedures specified in paragraph (a)(4)(i) of this section and the recordkeeping and reporting requirements specified in paragraph (h)(4)(ii) of this section. As an alternative to compliance with paragraph (h)(1)(i) of this section, a subject printing line may meet the requirements of paragraph (h)(1)(ii) or (iii) of this section.

(A) Forty percent VOM by volume of the coating and ink (minus water and any compounds which are specifically exempted from the definition of VOM), or

(B) Twenty-five percent VOM by volume of the volatile content in the coating and ink.

(ii) No owner or operator of a subject flexographic, packaging rotogravure or publication rotogravure printing line shall apply coatings or inks on the subject printing line unless the weighted average, by volume, VOM content of all coatings and inks as applied each day on the subject printing line does not exceed the limitation specified in either paragraph (h)(1)(i)(A) (as determined by paragraph (h)(1)(ii)(A) or (h)(1)(i)(B) (as determined by paragraph (h)(1)(ii)(B) of this section. Compliance with this paragraph must be demonstrated through the applicable coating or ink analysis test methods and procedures specified in paragraph (a)(4)(i) of this section and the recordkeeping and reporting requirements specified in paragraph (h)(4)(iii) of this section.

(A) The following equation shall be used to determine if the weighted average VOM content of all coatings and inks as applied each day on the subject printing line exceeds the limitation specified in paragraph (h)(1)(i)(A) of this section.

$$VOM_{(i)(A)} = \frac{\sum_{i=1}^{n} C_i L_i \left(V_{si} + V_{VOMi}\right)}{\sum_{i=1}^{n} L_i \left(V_{si} + V_{VOMi}\right)}$$

Where:

$VOM_{(i)(A)}$=The weighted average VOM content in units of percent VOM by volume of all coatings and inks (minus water and any compounds which are specifically exempted from the definition of VOM) used each day,

i=Subscript denoting a specific coating or ink as applied,

n=The number of different coatings and/or inks as applied each day on a printing line,

C_i=The VOM content in units of percent VOM by volume of each coating or ink as applied (minus water and any compounds which are specifically exempted from the defintion of VOM),

L_i=The liquid volume of each coating or ink as applied in units of l (gal),

V_{si}=The volume fraction of solids in each coating or ink as applied, and

V_{VOMi}=The volume fraction of VOM in each coating or ink as applied.

(B) The following equation shall be used to determine if the weighted average VOM content of all coatings and inks as applied each day on the subject printing line exceeds the limitation specified in paragraph (h)(1)(i)(B) of this section.

$$VOM_{(i)(B)} = \frac{\sum_{i=1}^{n} C_i L_i V_{VMi}}{\sum_{i=1}^{n} L_i V_{VMi}}$$

Where:

$VOM_{(i)(B)}$=The weighted average VOM content in units of percent VOM by volume of the volatile content of all coatings and inks used each day,

i=Subscript denoting a specific coating or ink as applied,

n=The number of different coatings and/or inks as applied each day on each printing line,

C_i=The VOM content in units of percent VOM by volume of the volatile matter in each coating or ink as applied,

L_i=The liquid volume of each coating or ink as applied in units of l (gal), and

V_{VMi}=The volume fraction of volatile matter in each coating or ink as applied.

(iii) No owner or operator of a subject flexographic, packaging rotogravure or publication rotogravure printing line equipped with a capture system and control device shall operate the subject printing line unless the owner or operator meets the requirements in paragraph (h)(1)(iii) (A), (B) or (C) and paragraphs (h)(1)(iii) (D), (E) and (F) of this section.

(A) A carbon adsorption system is used which reduces the captured VOM emissions by at least 90 percent by weight, or

(B) An incineration system is used which reduces the captured VOM emissions by at least 90 percent by weight, or

(C) An alternative VOM emission reduction system is demonstrated to have at least a 90 percent control device efficiency and the alternative emission reduction system is approved by the Administrator as a SIP or FIP revisions, and

(D) The printing line is equipped with a capture system and control device that provides an overall reduction in VOM emissions of at least:

(*1*) 75 percent where a publication rotogravure printing line is employed, or

(*2*) 65 percent where a packaging rotogravure printing line is employed, or

(*3*) 60 percent where a flexographic printing line is employed, and

(E) The control device is equipped with the applicable monitoring equipment specified in paragraph (a)(4)(iv)(B) of this section and the monitoring equipment is installed, calibrated, operated and maintained according to vendor specifications at all times the control device is in use, and

(F) The capture system and control device are operated at all times when the subject printing line is in operation. The owner or operator shall demonstrate compliance with this paragraph by using the applicable capture system and control device test methods and procedures specified in paragraphs (a)(4) (iii) through (vi) of this section and by complying with the recordkeeping and reporting requirements specified in paragraph (h)(4)(iv) of this section.

(2) *Applicability*. (i) The limitations of paragraph (h)(1) of this section apply to all flexographic and rotogravure printing lines at a subject facility. All facilities with flexographic and/or rotogravure printing lines are subject facilities unless:

(A) Total maximum theoretical emissions of VOM from all flexographic and rotogravure printing line(s) at the facility never exceed 90.7 Mg (100 tons) per calendar year before the application of capture systems and control devices, or

(B) A federally enforceable construction permit or SIP or FIP revision for all flexographic and rotogravure printing line(s) at a facility requires the owner or operator to limit production or capacity of these printing line(s) to reduce total VOM emissions from all flexographic and rotogravure printing line(s) to 90.7 Mg (100 tons) or less per calendar year before the application of capture systems and control devices.

(ii) Upon achieving compliance with paragraph (h) of this section, the emission source is not required to meet subpart K (sections 215.301 or 215.302) of 35 Ill. Adm. Code 215 (incorporated by reference as specified in 40 CFR 52.742).

Emission sources exempt from paragraph (h) of this section are subject to subpart K (sections 215.301 or 215.302). Rotogravure or flexographic equipment used for both roll printing and paper coating are subject to paragraph (h) of this section.

(iii) Once subject to the limitations of paragraph (h)(1) of this section, a flexographic or rotogravure printing line is always subject to the limitations of paragraph (h)(1) of this section.

(iv) Any owner or operator of any flexographic or rotogravure printing line that is exempt from the limitations of paragraph (h)(1) of this section because of the criteria in paragraph (h)(2) of this section is subject to the recordkeeping and reporting requirements specified in paragraph (h)(4)(i) of this section.

(3) *Compliance schedule.* Every owner or operator of a flexographic and/or rotogravure printing line shall comply with the applicable requirements of paragraph (h)(1) of this section and paragraph (h)(4) of this section in accordance with the applicable compliance schedule specified in paragraph (h)(3) (i), (ii), (iii) or (iv) of this section.

(i) No owner or operator of a flexographic or rotogravure printing line which is exempt from the limitations of paragraph (h)(1) of this section because the criteria in paragraph (h)(2) of this section shall operate said printing line on or after July 1, 1991, unless the owner or operator has complied with, and continues to comply with, paragraph (h)(4)(i) of this section.

(ii) No owner or operator of a flexographic or rotogravure printing line complying by means of paragraph (h)(1)(i) of this section shall operate said printing line on or after July 1, 1991, unless the owner or operator has complied with, and continues to comply with, paragraphs (h)(1)(i) and (h)(4)(ii) of this section.

(iii) No owner or operator of a flexographic or rotogravure printing line complying by means of paragraph (h)(1)(ii) of this section shall operate said printing line on or after July 1, 1991, unless the owner or operator has complied with, and continues to comply with, paragraphs (h)(1)(ii) and (h)(4)(iii) of this section.

(iv) No owner or operator of a flexographic or rotogravure printing line complying by means of paragraph (h)(1)(iii) of this section shall operate said printing line on or after July 1, 1991, unless the owner or operator has complied with, and continues to comply with, paragraphs (h)(1)(iii) and (h)(4)(iv) of this section.

(4) *Recordkeeping and reporting.* The VOM content of each coating and ink and the efficiency of each capture system and control device shall be determined by the applicable test methods and procedures specified in paragraph (a)(4) of this section to establish the records required under paragraph (h)(4) of this section.

(i) Any owner or operator of a printing line which is exempted from the limitations of paragraph (h)(1) of this section because of the criteria in paragraph (h)(2) of this section shall comply with the following:

(A) By July 1, 1991, the owner or operator of a facility to which paragraph (h)(4)(i) of this section is applicable shall certify to the Administrator that the facility is exempt under the provisions of paragraph (h)(2) of this section. Such certification shall include:

(*1*) A declaration that the facility is exempt from the limitations of the criteria in paragraph (h)(1) of this section because of paragraph (h)(2) of this section, and

(*2*) Calculations which demonstrate that total maximum theoretical emissions of VOM from all flexographic and rotogravure printing lines at the facility never exceed 90.7 Mg (100 tons) per calendar year before the application of capture systems and control devices. Total maximum theoretical emissions of VOM for a flexograhpic or rotogravure printing facility is the sum of maximum theoretical emissions of VOM from each flexographic and rotogravure printing line at the facility. The following equation shall be used to calculate total maximum theoretical emissions of VOM per calendar year before the application of capture systems and control devices for each flexographic and rotogravure printing line at the facility:

$$E_P = A \times B$$

Where:

E_p=Total maximum theoretical emissions of VOM from one flexographic or rotogravure printing line in units of kg/year (lbs/year),

A=Weight of VOM per volume of solids of the coating or ink with the highest VOM content as applied each year on the printing line in units of kg VOM/l (lbs VOM/gal) of coating or ink solids, and

B=Total volume of solids for all coatings and inks that can potentially be applied each year on the printing line in units of l/year (gal/year). The instrument and/or method by which the owner or operator accurately measured or calculated the volume of each coating and ink as applied and the amount that can potentially be applied each year on the printing line shall be described in the certification to the Administrator.

(B) On and after July 1, 1991, the owner or operator of a facility referenced in paragraph (h)(4)(i) of this section shall collect and record all of the following information each year for each printing line and maintain the information at the facility for a period of three years:

(*1*) The name and identification number of each coating and ink as applied on each printing line.

(*2*) The VOM content and the volume of each coating and ink as applied each year on each printing line.

(C) On and after July 1, 1991, the owner or operator of a facility exempted from the limitations of paragraph (h)(1) of this section because of the criteria in paragraph (h)(2) of this section shall notify the Administrator of any record showing that total maximum theoretical emissions of VOM from all printing lines exceed 90.7 Mg (100 tons) in any calendar year before the application of capture systems and control devices, shall be reported by sending a copy of such record to the Administrator within 30 days after the exceedance occurs.

(ii) Any owner or operator of a printing line subject to the limitations of paragraph (h)(1) of this section and complying by means of paragraph (h)(1)(i) of this section shall comply with the following:

(A) By July 1, 1991, or upon initial start-up of a new printing line, or upon changing the method of compliance from an existing subject printing line from paragraph (h)(1) (ii) or (iii) of this section to paragraph (h)(1)(i) of this section, the owner or operator of a subject printing line shall certify to the Administrator that the printing line will be in compliance with paragraph (h)(1)(i) of this section on and after July 1, 1991, or on and after the initial start-up date. Such certification shall include:

(*1*) The name and identification number of each coating and ink as applied on each printing line.

(*2*) The VOM content of each coating and ink as applied each day on each printing line.

(B) On and after July 1, 1991, or on and after the initial start-up date, the owner or operator of a printing line subject to the limitations of paragraph (h)(1) of this section and complying by means of paragraph (h)(1)(i) of this section shall collect and record all of the following information each day for each coating line and maintain the information at the facility for a period of three years:

(*1*) The name and identification number of each coating and ink as applied on each printing line.

(*2*) The VOM content of each coating and ink as applied each day on each printing line.

(C) On and after July 1, 1991, the owner or operator of a subject printing line shall notify the Administrator in the following instances:

(*1*) Any record showing violation of paragraph (h)(1)(i) of this section shall be reported by sending a copy of such record to the Administrator within 30 days following the occurrence of the violation.

(*2*) At least 30 calendar days before changing the method of compliance with paragraph (h)(1) of this section from paragraph (h)(1)(i) of this section to paragraph (h)(1) (ii) or (iii) of this section, the owner or operator shall comply with all requirements of paragraph (h)(4) (iii)(A) or (iv)(A) of this section respectively. Upon changing the method of compliance with paragraph (h)(1) from paragraph (h)(1)(i) to paragraph (h)(1) (ii) or (iii) of this section, the owner or operator shall comply with all requirements of paragraph (h)(4) (iii) or (iv) of this section, respectively.

(iii) Any owner or operator of a printing line subject to the limitations of paragraph (h)(1) of this section and complying by means of paragraph

(h)(1)(ii) of this section shall comply with the following:

(A) By July 1, 1991, or upon initial start-up of a new printing line, or upon changing the method of compliance for an existing subject printing line from paragraph (h)(1) (i) or (iii) of this section to paragraph (h)(1)(ii) of this section, the owner or operator of the subject printing line shall certify to the Administrator that the printing line will be in compliance with paragraph (h)(1)(ii) of this section on and after July 1, 1991, or on and after the initial start-up date. Such certification shall include:

(*1*) The name and identification number of each printing line which will comply by means of paragraph (h)(1)(ii) of this section.

(*2*) The name and identification number of each coating and ink available for use on each printing line.

(*3*) The VOM content of each coating and ink as applied each day on each printing line.

(*4*) The instrument or method by which the owner or operator will accurately measure or calculate the volume of each coating and ink as applied each day on each printing line.

(*5*) The method by which the owner or operator will create and maintain records each day as required in paragraph (h)(4)(iii)(B) of this section.

(*6*) An example of the format in which the records required in paragraph (h)(4)(iii)(B) of this section will be kept.

(B) On and after July 1, 1991, or on and after the initial start-up date, the owner or operator of a printing line subject to the limitations of paragraph (h)(1) of this section and complying by means of paragraph (h)(1)(ii) of this section shall collecting line and maintain the information at the facility for a period of three years:

(*1*) The name and identification number of each coating and ink as applied on each printing line.

(*2*) The VOM content and the volume of each coating and ink as applied each day on each printing line.

(*3*) The daily-weighted average VOM content of all coatings and inks as applied on each printing line.

(C) On and after July 1, 1991, the owner or operator of a subject printing line shall notify the Administrator in the following instances:

(*1*) Any record showing violation of paragraph (h)(1)(ii) of this section shall be reported by sending a copy of such record to the Administrator within 30 days following the occurrence of the violation.

(*2*) At least 30 calendar days before changing the method of compliance with paragraph (h)(1) of this section from paragraph (h)(1)(ii) to paragraph (h)(1)(i) or (iii) of this section, the owner or operator shall comply with all requirements of paragraph (h)(4)(ii)(A) or (iv)(A), respectively. Upon changing the method of compliance with paragraph (h)(1) from paragraph (h)(1)(ii) to paragraph (h)(1)(i) or (iii), the owner or operator shall comply with all requirements of paragraph (h)(4)(ii) or (iv) of this section, respectively.

(iv) Any owner or operator of a printing line subject to the limitations of paragraph (h)(1) of this section and complying by means of paragraph (h)(1)(iii) of this section shall comply with the following:

(A) By July 1, 1991, or upon initial start-up of a new printing line, or upon changing the method of compliance for an existing printing line from paragraph (h)(1)(i) or (ii) of this section to paragraph (h)(1)(iii) of this section, the owner or operator of the subject printing line shall perform all tests and submit to the Administrator the results of all tests and calculations necessary to demonstrate that the subject printing line will be in compliance with paragraph (h)(1)(iii) of this section on and after July 1, 1991, or on and after the initial start-up date.

(B) On and after July 1, 1991, or on and after the initial start-up date, the owner or operator of a printing line subject to the limitations of paragraph (h)(1) of this section and complying by means of paragraph (h)(1)(iii) of this section shall collect and record all of the following information each day for each printing line and maintain the information at the facility for a period of three years:

(*1*) Control device monitoring data.

(*2*) A log of operating time for the capture system, control device, monitoring equipment and the associated printing line.

(*3*) A maintenance log for the capture system, control device and monitoring equipment detailing all routine and non-routine maintenance performed including dates and duration of any outages.

(C) On and after July 1, 1991, the owner or operator of a subject printing line shall notify the Administration in the following instances:

(*1*) Any record showing violation of paragraph (h)(1)(iii) of this section shall be reported by sending a copy of such record to the Administrator within 30 days following the occurrence of the violation.

(*2*) At least 30 calendar days before changing the method of compliance with paragraph (h)(1) from paragraph (h)(1)(iii) to paragraph (h)(1) (i) or (ii), the owner or operator shall comply with all requirements of paragraph (h)(4) (ii)(A) or (iii)(A) of this section, respectively. Upon changing the method of compliance with paragraph (h)(1) from paragraph (h)(1)(iii) to paragraph (h)(1) (i) or (ii) of this section, the owner or operator shall comply with all requirements of paragraph (h)(4) (ii) or (iii) of this section, respectively.

(5) *Heatset-web-offset lithographic printing*—(i) *Applicability*. (A) The limitations of paragraph (h)(5)(ii) of this section apply to all heatset-web-offset lithographic printing lines at a subject facility. All facilities with heatset-web-offset lithographic printing lines are subject facilities unless:

(*1*) Total maximum theoretical emissions of VOM from all heatset-web-offset lithographic printing lines at the facility never exceed 90.7 Mg (100 tons) per calendar year in the absence of air pollution control equipment, or

(*2*) A federally enforceable construction permit or SIP or FIP revision for all heatset-web-offset lithographic printing line(s) at a facility requires the owner or operator to limit production or capacity of these printing line(s) to reduce total VOM emissions from all heatset-web-offset lithographic printing line(s) to 90.7 Mg (100 tons) per calendar year or less in the absence of air pollution control equipment, and

(B) Any owner or operator of any heatset-web-offset lithographic printing line that is exempt from the limitations in paragraph (h)(5)(ii) of this section because of the criteria in paragraph (h)(5)(i)(A) of this section shall be subject to the recordkeeping and reporting requirements in paragraph (h)(5)(iii)(A) of this section.

(ii) *Specific provisions.* No owner or operator of a subject heatset-web-offset printing line may cause or allow the operation of the subject heatset-web-offset printing line unless the owner or operator meets the requirements in paragraph (h)(5)(ii) (A) or (B) of this section and the requirements in paragraphs (h)(5)(ii) (C) and (D) of this section.

(A) An afterburner system is installed and operated that reduces 90 percent of the VOM emissions from the dryer exhaust, or

(B) The fountain solution contains no more than 8 percent, by weight, of VOM and a condensation recovery system is installed and operated that removes at least 75 percent of the non-isopropyl alcohol organic materials from the dryer exhaust, and

(C) The control device is equipped with the applicable monitoring equipment specified in paragraph (a)(4)(iv)(B) of this section and the monitoring equipment is installed, calibrated, operated and maintained according to vendor specifications at all times the control device is in use, and

(D) The control device is operated at all times when the subject printing line is in operation. The owner or operator shall demonstrate compliance with paragraph (h)(5) of this section by using the applicable test methods and procedures specified in paragraphs (a)(4) (i), (iv), and (vi) of this section and by complying with the recordkeeping and reporting requirements specified in paragraph (h)(5)(iii) of this section.

(iii) *Recordkeeping and reporting.* The VOM content of each fountain solution and ink and the efficiency of each control device shall be determined by the applicable test methods and procedures

specified in paragraph (a)(4) of this section to establish the records required under paragraph (h)(5)(iii) of this section.

(A) Any owner or operator of a printing line which is exempted from the limitations of paragraph (h)(5)(ii) of this section because of the criteria in paragraph (h)(5)(i) of this section shall comply with the following:

(*1*) By July 1, 1991, the owner or operator of a facility to which paragraph (h)(5)(iii)(A) of this section is applicable shall certify to the Administrator that the facility is exempt under the provisions of paragraph (h)(5)(i) of this section. Such certification shall include:

(*i*) A declaration that the facility is exempt from the limitations of paragraph (h)(5)(ii) of this section because of the criteria in paragraph (h)(5)(i) of this section, and

(*ii*) Calculations which demonstrate that total maximum theoretical emissions of VOM from all heatset-web-offset lithographic printing lines at the facility never exceed 90.7 Mg (100 tons) per calendar year before the application of air pollution control equipment. Total maximum theoretical emissions of VOM for a heatset-web-offset lithographic printing facility is the sum of maximum theoretical emissions of VOM from each heatset-web-offset lithographic printing line at the facility. The following equation shall be used to calculate total maximum theoretical emissions of VOM per calendar year in the absence of air pollution control equipment for each heatset-web-offset lithographic printing line at the facility.

$$E_p = (A \times B) + \frac{(C \times D)}{100}$$

where

E_p=Total maximum theoretical emissions of VOM from one heatset-web-offset printing line in units of kg/year (lbs/year),

A=Weight of VOM per volume of solids of ink with the highest VOM content as applied each year on the printing line in units of kg VOM/l (lbs VOM/gal) of solids, and

B=Total volume of solids for all inks that can potentially be applied each year on the printing line in units of l/year (gal/year). The instrument or method by which the owner or operator accurately measured or calculated the volume of each ink as applied and the amount that can potentially be applied each year on the printing line shall be described in the certification to the Administrator.

C=The weight percent VOM of the fountain solution with the highest VOM content.

D=The total volume of fountain solution that can potentially be used each year on the printing line in units of l/year (gal/year). The instrument and/or method by which the owner or operator accurately measured or calculated the volume of each fountain solution used and the amount that can potentially be used each year on the printing line shall be described in the certification to the Administrator.

(*2*) On and after July 1, 1991, the owner or operator of a facility to which paragraph (h)(5)(iii)(A) of this section is applicable shall collect and record all of the following information each year for each printing line and maintain the information at the facility for a period of three years:

(*i*) The name and identification of each fountain solution and ink as applied on each printing line.

(*ii*) The VOM content and the volume of each fountain solution and ink as applied each year on each printing line.

(*3*) On and after July 1, 1991, the owner or operator of a facility exempted from the limitations of paragraph (h)(5)(ii) of this section because of the criteria in paragraph (h)(5)(i) of this section shall notify the Administrator of any record showing that total maximum theoretical emissions of VOM from all printing lines exceed 90.7 Mg (100 tons) in any calendar year in the absence of air pollution control equipment shall be reported by sending a copy of such record to the Administrator within 30 days after the exceedance occurs.

(B) Any owner or operator of a printing line subject to the limitations of paragraph (h)(5)(ii) of this section and complying by means of paragraph (h)(5)(ii)(A) of this section shall comply with the following:

(*1*) By July 1, 1991, or upon initial start-up of a new printing line, or upon changing the method of compliance for an existing printing line from paragraph (h)(5) (ii)(B) to (ii)(A) of this section, the owner or operator of the subject printing line shall perform all tests and submit to the Administrator the results of all tests and calculations

necessary to demonstrate that the subject printing line will be in compliance with paragraph (h)(5)(ii)(A) of this section on and after July 1, 1991, or on and after the initial start-up date.

(*2*) On and after July 1, 1991, or on and after the initial start-up date, the owner or operator of a printing line subject to the limitations of paragraph (h)(5)(ii) of this section and complying by means of paragraph (h)(5)(ii)(A) of this section shall collect and record the following information each day for each printing line and maintain the information at the facility for a period of three years:

(*i*) Control device monitoring data.

(*ii*) A log of operating time for the control device, monitoring equipment and the associated printing line.

(*iii*) A maintenance log for the control device and monitoring equipment detailing all routine and nonroutine maintenance performed including dates and duration of any outages.

(*3*) On and after July 1, 1991, the owner or operator of a subject printing line shall notify the Administrator in the following instances:

(*i*) Any record showing violation of paragraph (h)(5)(ii)(A) of this section shall be reported by sending a copy of such record to the Administrator within 30 days following the occurrence of the violation.

(*ii*) At least 30 calendar days before changing the method of compliance with paragraph (h)(5)(ii) of this section from paragraph (h)(5) (ii)(A) to (ii)(B), the owner or operator shall comply with all requirements of paragraph (h)(5)(iii)(C)(*1*) of this section. Upon changing the method of compliance with paragraph (h)(5)(ii) from paragraph (h)(5) (ii)(A) to (ii)(B) of this section the owner or operator shall comply with all requirements of paragraph (h)(5)(iii)(C) of this section.

(C) Any owner or operator of a printing line subject to the limitations of paragraph (h)(5)(ii) of this section and complying by means of paragraph (h)(5)(ii)(B) of this section shall comply with the following:

(*1*) By July 1, 1991, or upon initial start-up of a new printing line, or upon changing the method of compliance for an existing printing line from paragraph (h)(5) (ii)(A) to (ii)(B) of this section, the owner or operator of the subject printing line shall perform all tests and submit to the Administrator the results of all tests and calculations necessary to demonstrate that the subject printing line will be in compliance with paragraph (h)(5)(ii)(B) of this section on and after July 1, 1991, or on and after the initial start-up date.

(*2*) On and after July 1, 1991, or on and after the initial start-up date, the owner or operator of a printing line subject to the limitations of paragraph (h)(5)(ii) of this section and complying by means of paragraph (h)(5)(ii)(B) of this section shall collect and record the following information each day for each printing line and maintain the information at the facility for a period of three years:

(*i*) The VOM content of the fountain solution used each day on each printing line.

(*ii*) A log of operating time for the control device and the associated printing line.

(*iii*) A maintenance log for the control device detailing all routine and non-routine maintenance performed including dates and duration of any outages.

(*3*) On and after July 1, 1991, the owner or operator of a subject printing line shall notify the Administrator in the following instances:

(*i*) Any record showing violation of paragraph (h)(5)(ii)(B) of this section shall be reported by sending a copy of such record to the Administrator within 30 days following the occurrence of the violation.

(*ii*) At least 30 calendar days before changing the method of compliance with paragraph (h)(5)(ii) of this section from paragraph (h)(5)(ii)(B) to (h)(5)(ii)(A) of this section, the owner or operator shall comply with all requirements of paragraph (h)(5)(iii)(B)(*1*) of this section. Upon changing the method of compliance with paragraph (h)(5)(ii) of this section from paragraph (h)(5)(ii)(B) to (h)(5)(ii)(A) of this section, the owner or operator shall comply with all requirements of paragraph (h)(5)(iii)(B) of this section.

(iv) *Compliance schedule.* Every owner or operator of a heatset-web-offset lithographic printing line shall comply with the applicable requirements of

paragraphs (h)(5) (ii) and (iii) of this section in accordance with the applicable compliance schedule specified in paragraph (h)(5)(iv) (A), (B) or (C) of this section.

(A) No owner or operator of a heatset-web-offset lithographic printing line which is exempt from the limitations of paragraph (h)(5)(ii) of this section because of the criteria in paragraph (h)(5)(i) of this section shall operate said printing line on or after July 1, 1991, unless the owner or operator has complied with, and continues to comply with, paragraphs (h)(5)(iii)(A) and (h)(5)(ii)(A) of this section.

(B) No owner or operator of a heatset-web-offset lithographic printing line complying by means of paragraph (h)(5)(ii)(A) of this section shall operate said printing line on or after July 1, 1991, unless the owner or operator has complied with, and continues to comply with, paragraphs (h)(5)(iii)(B) and (h)(5)(ii)(B) of this section.

(C) No owner or operator of a heatset-web-offset lithographic printing line complying by means of paragraph (h)(5)(ii)(B) of this section shall operate said printing line on or after July 1, 1991, unless the owner or operator has complied with, and continues to comply with, paragraph (h)(5)(iii)(C) of this section.

(6) The control and recordkeeping and reporting requirements, as well as the test methods in this paragraph, apply to the rotogravure and flexographic presses at General Packaging Products, Inc.'s (GPP) plant in Chicago, Illinois, instead of the requirements in 40 CFR 52.741(h)(1) through 40 CFR 52.741(h)(5).

(i) After July 1, 1992, no inks or other volatile organic material (VOM) containing materials shall at any time be applied or used which have a higher percent VOM by weight than the following:

(A) 8 percent VOM by weight for waterbased inks as applied on GPP's presses.

(B) 82 percent VOM by weight for solvent based inks as applied on GPP's presses.

(C) 100 percent VOM by weight for all other VOM containing materials (besides inks) as used on GPP's presses.

(ii) After July 1, 1992, the weight of ink and other VOM containing materials used shall not exceed the following:

(A) 200,000 pounds per year total for all waterbased inks, as applied (including dilution material). The yearly weight of waterbased inks used is to be calculated according to the procedure in paragraph (h)(6)(iii) of this section.

(B) 100,008 pounds per year total for all solvent based inks, as applied (including dilution material). The yearly weight of solvent based inks used is to be calculated according to the procedure in paragraph (h)(6)(iii) of this section.

(C) 100,000 pounds per year total (based upon the formulation of the material as it is used on the presses) for all other VOM containing materials (besides inks). The yearly weight of other VOM containing materials is to be calculated according to the procedure in paragraph (h)(6)(iii) of this section.

(iii) The yearly weight of ink/material used is to be calculated as follows:

(A) Compute the weight of ink/material used each month by the 15th of the following month.

(B) By the 15th of each month, add the monthly ink/material usage for the 12 previous months (to obtain the yearly weight of ink/material used).

(iv) Beginning on July 1, 1992, the owner and operator of GPP's plant in Chicago, Illinois, shall keep the following records for each month. All records shall be retained at GPP for 3 years and shall be made available to the Administrator on request:

(A) The name and identification number of each waterbased ink, each solvent based ink, and each other VOM containing material as applied or used on any press.

(B) The pounds of waterbased ink as applied on all presses for each month and the percent VOM by weight for each waterbased ink as applied on any press for each month.

(C) The pounds of solvent based ink as applied on all presses for each month and the percent VOM by weight for each solvent based ink as applied on any press for each month.

(D) The pounds of other (non-ink) VOM containing material used on all

presses for each month and the percent VOM by weight for each (non-ink) VOM containing material as used on any press for each month.

(v) Any record showing a violation of paragraph (h)(6)(i) or (h)(6)(ii) of this section shall be reported by sending a copy of such record to the Administrator within 30 days of the violation.

(vi) To determine compliance with paragraphs (h)(6)(i) and (h)(6)(ii) of this section and to establish the records required under paragraph (h)(6)(iv) of this section the percent VOM by weight of each ink and other VOM containing material shall be determined by the applicable test methods and procedures specified in paragraph (a)(4) of this section.

(i) *Leaks from synthetic organic chemical and polymer manufacturing equipment*—(1) *Inspection program for leaks.* The owner or operator of a synthetic organic chemical or polymer manufacturing plant subject to paragraph (i) and subpart Q (sections 215.430, 215.431, 215.433, 215.434, 215.435, and 215.437) of Ill. Adm. Code 215 (incorporated by reference as specified in 40 CFR 52.742) shall, for the purposes of detecting leaks, conduct a component inspection program using the test methods specified in Method 21, 40 CFR part 60, appendix A, consistent with the following provisions:

(i) Test annually those components operated near extreme temperature or pressure such that they would be unsafe to routinely monitor and those components which would require the elevation of monitoring personnel higher than two meters above permanent worker access structures or surfaces.

(ii) Test quarterly all other pressure relief valves in gas service, pumps in light liquid service, valves in light liquid service and in gas service, and compressors.

(iii) If less than or equal to 2 percent of the valves in light liquid service and in gas service tested pursuant to paragraph (i)(1)(ii) of this section are found not to leak for five consecutive quarters, no leak tests shall be required for three consecutive quarters. Thereafter, leak tests shall resume for the next quarter. If that test shows less than or equal to 2 percent of the valves in light liquid service and in gas service are leaking, then no tests are required for the next three quarters. If more than 2 percent are leaking, then tests are required for the next five quarters.

(iv) Observe visually all pump seals weekly.

(v) Test immediately any pump seal from which liquids are observed dripping.

(vi) Test any relief valve within 24 hours after it has vented to the atmosphere.

(vii) Routine instrument monitoring of valves which are not externally regulated, flanges, and equipment in heavy liquid service, is not required. However, any valve which is not externally regulated, flange or piece of equipment in heavy liquid service that is found to be leaking on the basis of sight, smell or sound shall be repaired as soon as practicable but no later than 30 days after the leak is found.

(viii) Test immediately after repair any component that was found leaking.

(ix) Within one hour of its detection, a weatherproof, readily visible tag, in bright colors such as red or yellow, bearing an identification number and the date on which the leak was detected must be affixed on the leaking component and remain in place until the leaking component is repaired.

(x) The following components are exempt from the monitoring requirements in paragraph (i)(1) of this section:

(A) Any component that is in vacuum service, and

(B) Any pressure relief valve that is connected to an operating flare header or vapor recovery device.

(2) *Alternative program for leaks.* The Administrator shall approve an alternative program of monitoring, recordkeeping, or reporting to that prescribed in paragraph (i) and subpart Q (sections 215.430, 215.431, 215.433, 215.434, 215.435, and 215.437) of Ill. Adm. Code 215 (incorporated by reference as specified in 40 CFR 52.742), upon a demonstration by the owner or operator of such plant that the alternative program will provide plant personnel and USEPA personnel with an equivalent ability to identify and repair leaking components. Any alternative program can

only be allowed if approved by the Administrator as a SIP or FIP revision.

(j) *Petroleum refining and related industries: asphalt materials*—(1) *Monitoring program for leaks.* (i) The owner or operator of a petroleum refinery subject to subpart R (section 215.445) of Ill. Adm. Code 215 (incorporated by reference as specified in 40 CFR 52.742) shall, for the purpose of detecting leaks, conduct a component monitoring program consistent with the following provisions:

(A) Test once between March 1 and June 1 of each year, by methods referenced in paragraph (a)(4)(vii) of this section, all pump seals, pipeline valves in liquid service and process drains.

(B) Test once each quarter of each calendar year, by methods referenced in paragraph (a)(4)(vii) of this section, all pressure relief valves in gaseous service, pipeline valves in gaseous service and compressor seals.

(C) Inaccessible valves may be tested once each calendar year instead of once each quarter of each calendar year.

(D) Observe visually all pump seals weekly.

(E) Test immediately any pump seal from which liquids are observed dripping,

(F) Test any relief valve within 24 hours after it has vented to the atmosphere, and

(G) Test immediately after repair any component that was found leaking.

(ii) Storage tank valves and pressure relief devices connected to an operating flare header or vapor recovery device are exempt from the monitoring requirements in paragraph (j)(1)(i) of this section.

(iii) The Administrator may require more frequent monitoring than would otherwise be required by paragraph (j)(1)(i) of this section for components which are demonstrated to have a history of leaking.

(2) *Alternative program for leaks.* The Administrator may approve an alternative program of monitoring, recordkeeping or reporting to that prescribed in paragraph (j)(1) of this section and subpart R (sections 215.446, 215.448, and 215.449) of Ill. Adm. Code 215 (incorporated by reference as specified in 40 CFR 52.742), upon a demonstration by the owner or operator of a petroleum refinery that the alternative program will provide refinery and USEPA personnel with an equivalent ability to identify and repair leaking components. Any alternative program can only be allowed if approved by the Administrator as a SIP or FIP revision.

(3) *Compliance schedule for leaks.* The owner or operator of a petroleum refinery shall adhere to the increments of progress contained in the following schedule:

(i) Submit to the Administrator a monitoring program consistent with subpart R (section 215.446) of Ill. Adm. Code 215 (incorporated by reference as specified in 40 CFR 52.742) prior to September 1, 1990.

(ii) Submit to the Administrator the first monitoring report pursuant to subpart R (section 215.449) of Ill. Adm. Code 215 (incorporated by reference as specified in 40 CFR 52.742) prior to October 1, 1990.

(k)–(l) [Reserved]

(m) *Pharmaceutical manufacturing*—(1) *Applicability.* (i) The rules of paragraph (m) of this section, except for paragraphs (m)(4) through (m)(6) of this section, apply to all emission sources of VOM, including but not limited to reactors, distillation units, dryers, storage tanks for VOL, equipment for the transfer of VOL, filters, crystallizers, washers, laboratory hoods, pharmaceutical coating operations, mixing operations and centrifuges used in manufacturing, including packaging, of pharmaceuticals, and emitting more than 6.8 kg/day (15 lbs/day) and more than 2,268 kg/year (2.5 tons/year) of VOM. If an emission source emits less than 2,268 kg/year (2.5 tons/year) of VOM, the requirements of this paragraph still apply to the emission source if VOM emissions from the emission source exceed 45.4 kg/day (100 lbs/day).

(ii) Notwithstanding paragraph (m)(1)(i) of this section, the air suspension coater/dryer, fluid bed dryers, tunnel dryers, and Accelacotas located in Libertyville Township, Lake County, Illinois shall be exempt from the rules of paragraph (m) of this section, except for paragraphs (m)(4) through (m)(6) of this section, if emissions of VOM not vented to air pollution control equipment do not exceed the following levels:

(A) For the air suspension coater/dryer: 2,268 kg/year (2.5 tons/year);

(B) For each fluid bed dryer: 4,535 kg/year (5.0 tons/year);

(C) For each tunnel dryer: 6,803 kg/year (7.5 tons/year); and

(D) For each Accelacota: 6,803 kg/year (7.5 tons/year).

(iii) Paragraphs (m)(4) through (m)(6) of this section apply to a plant having one or more emission sources that:

(A) Are used to manufacture pharmaceuticals, and

(B) Emit more than 6.8 kg/day (15 lbs/day) of VOM and more than 2,268 kg/year (2.5 tons/year) of VOM, or, if less than 2,268 kg/year (2.5 tons/year), these paragraphs still apply if emissions from one or more sources exceed 45.4 kg/day (100 lbs/day).

(iv) No owner or operator shall violate any condition in a permit when the condition results in exclusion of an emission source from paragraph (m) of this section.

(v) Any pharmaceutical manufacturing source that becomes subject to the provisions of paragraph (m) of this section at any time shall remain subject to the provisions of paragraph (m) of this section at all times.

(vi) Emissions subject to paragraph (m) of this section shall be controlled at all times consistent with the requirements set forth in paragraph (m) of this section.

(vii) Control devices required pursuant to paragraph (m) of this section shall be operated at all times when the source it is controlling is operated.

(viii) Determinations of daily and annual emissions for purposes of paragraph (m)(1) of this section shall be made using both data on the hourly emission rate (or the emissions per unit of throughput) and appropriate daily and annual data from records of emission source operation (or material throughput or material consumption data). In the absence of representative test data pursuant to paragraph (m)(8) of this section for the hourly emission rate (or the emissions per unit of throughput), such items shall be calculated using engineering calculations, including the methods described in appendix B of "Control of Volatile Organic Emissions from Manufacturing of Synthesized Pharmaceutical Products" (EPA–450/2–78–029). (This subparagraph shall not affect the Administrator's authority to require emission tests to be performed pursuant to paragraph (m)(8) of this section.)

(2) *Control of reactors, distillation units, crystallizers, centrifuges and vacuum dryers.* (i) The owner or operator shall equip all reactors, distillation units, crystallizers, centrifuges and vacuum dryers that are used to manufacture pharmaceuticals with surface condensers or other air pollution control equipment listed in paragraph (m)(2)(i)(B) of this section.

(A) If a surface condenser is used, it shall be operated such that the condenser outlet gas temperature does not exceed:

(*1*) 248.2 K (−13 ° F) when condensing VOM of vapor pressure greater than 40.0 kPa (5.8 psi) at 294.3K (70 ° F), or

(*2*) 258.2 K (5 ° F) when condensing VOM of vapor pressure greater than 20.0 kPa (2.9 psi) at 294.3 K (70 ° F), or

(*3*) 273.2 K (32 ° F) when condensing VOM of vapor pressure greater than 10.0 kPa (1.5 psi) at 294.3 K (70 ° F), or

(*4*) 283.2 K (50 ° F) when condensing VOM of vapor pressure greater than 7.0 kPa (1.0 psi) at 294.3 K (70 ° F), or

(*5*) 298.2 K (77 ° F) when condensing VOM of vapor pressure greater than 3.45 kPa (0.5 psi) at 294.3 K (70 ° F).

(B) If a scrubber, carbon adsorption, thermal afterburner, catalytic afterburner, or other air pollution control equipment other than a surface condenser is used, such equipment shall provide a reduction in the emissions of VOM of 90 percent or more.

(ii) The owner or operator shall enclose all centrifuges used to manufacture pharmaceuticals and that have an exposed VOL surface, where the VOM in the VOL has a vapor pressure of 3.45 kPa (0.5 psi) or more at 294.3 K (70 ° F), except as production, sampling, maintenance, or inspection procedures require operator access.

(3) *Control of air dryers, production equipment exhaust systems and filters.* (i) The owner or operator of an air dryer or production equipment exhaust system used to manufacture pharmaceuticals shall control the emissions of VOM from such emission sources by air pollution control equipment which reduces by 90 percent or more the VOM

that would otherwise be emitted into the atmosphere.

(ii) The owner or operator shall enclose all rotary vacuum filters and other filters used to manufacture pharmaceuticals and that have an exposed VOL surface, where the VOM in the VOL has a vapor pressure of 3.45 kPa (0.5 psi) or more at 294 K (70 ° F), except as production, sampling, maintenance, or inspection procedures require operator access.

(4) *Material storage and transfer.* The owner or operator of a pharmaceutical manufacturing plant shall:

(i) Provide a vapor balance system that is at least 90 percent effective in reducing VOM emissions from truck or railcar deliveries to storage tanks with capacities equal to or greater than 7.57 m^3 (2,000 gal) that store VOL with vapor pressures greater than 28.0 kPa (4.1 psi) at 294.3 K (70 ° F), and

(ii) Install, operate, and maintain pressure/vacuum conservation vents set at 0.2 kPa (0.03 psi) or greater on all storage tanks that store VOL with vapor pressures greater than 10 kPa (1.5 psi) at 294.3 K (70 ° F).

(5) *In-process tanks.* The owner or operator shall install covers on all in-process tanks used to manufacture pharmaceuticals and containing a VOL at any time. These covers must remain closed, except as production, sampling, maintenance or inspection procedures require operator access.

(6) *Leaks.* The owner or operator of a pharmaceutical manufacturing plant shall repair any component from which a leak of VOL can be observed. The repair shall be completed as soon as practicable but no later than 15 days after the leak is found. If the leaking component cannot be repaired until the process unit is shut down, the leaking component must then be repaired before the unit is restarted.

(7) *Other emission sources.* The owner or operator of a washer, laboratory hood, tablet coating operation, mixing operation or any other process emission source not subject to paragraphs (m)(2) through (m)(6) of this section, and used to manufacture pharmaceuticals shall control the emissions of VOM from such emission sources by:

(i) Air pollution control equipment which reduces by 81 percent or more the VOM that would otherwise be emitted to the atmosphere, or

(ii) A surface condenser which captures all the VOM which would otherwise be emitted to the atmosphere and which meets the requirements of paragraph (m)(2)(i) of this section.

(8) *Testing.* (i) Upon request by the Administrator, the owner or operator of any VOM emission source subject to paragraph (m) or exempt from paragraph (m) of this section by virtue of the provisions of paragraph (m)(1) of this section shall, at his own expense, demonstrate compliance to the Administrator by the methods or procedures listed in paragraph (a)(vi)(A) of this section.

(ii) A person planning to conduct a VOM emissions test to demonstrate compliance with paragraph (m) of this section shall notify the Administrator of that intent not less than 30 calendar days before the planned initiation of the test.

(9) *Monitoring and recordkeeping for air pollution control equipment*—(i) *Monitoring.* (A) At a minimum, continuous monitors for the following parameters shall be installed on air pollution control equipment used to control sources subject to paragraph (m) of this section:

(*1*) Destruction device combustion temperature.

(*2*) Temperature rise across a catalytic afterburner bed.

(*3*) VOM concentration on a carbon absorption unit to determine breakthrough.

(*4*) Outlet gas temperature of a refrigerated condenser.

(*5*) Temperature of a non-refrigerated condenser coolant supply system.

(B) Each monitor shall be equipped with a recording device.

(C) Each monitor shall be calibrated quarterly.

(D) Each monitor shall operate at all times while the associated control equipment is operating.

(ii) *Recordkeeping.* (A) The owner or operator of a pharmaceutical manufacturing facility shall maintain the following records:

(*1*) Parameters listed in paragraph (m)(9)(i)(A) of this section shall be recorded.

(*2*) For sources subject to paragraph (m)(2) of this section, the vapor pressure of VOM being controlled shall be recorded for every process.

(B) For any leak subject to paragraph (m)(6) of this section which cannot be readily repaired within one hour after detection, the following records shall be kept:

(*1*) The name of the leaking equipment,

(*2*) The date and time the leak is detected,

(*3*) The action taken to repair the leak, and

(*4*) The data and time the leak is repaired.

(C) The following records shall be kept for emission sources subject to paragraph (m)(5) of this section which contain VOL:

(*1*) For maintenance and inspection:

(*i*) The date and time each cover is opened,

(*ii*) The length of time the cover remains open, and

(*iii*) The reason why the cover is opened.

(*2*) For production and sampling, detailed written procedures or manufacturing directions specifying the circumstances under which covers may be opened and the procedures for opening covers.

(D) For each emission source used in the manufacture of pharmaceuticals for which the owner or operator of a pharmaceutical manufacturing plant claims emission standards are not applicable, because the emissions are below the applicability cutoffs in paragraph (m)(1)(i) of this section or paragraph (m)(1)(ii) of this section the owner or operator shall:

(*1*) Maintain a demonstration including detailed engineering calculations of the maximum daily and annual emissions for each such emission source showing that the emissions are below the applicability cutoffs in paragraph (m)(1)(i) or paragraph (m)(1)(ii) of this section, as appropriate, for the current and prior calendar years;

(*2*) Maintain appropriate operating records for each such emission source to identify whether the applicability cutoffs in paragraph (m)(1)(i) or paragraph (m)(1)(ii) of this section, as appropriate, are ever exceeded; and

(*3*) Provide written notification to the Administrator within 30 days of a determination that such an emission source has exceeded the applicability cutoffs in paragraph (m)(1)(i) or paragraph (m)(1)(ii) of this section, as appropriate.

(E) Records required under paragraph (m)(9)(ii)(A) of this section shall be maintained by the owner or operator for a minimum of two years after the date on which they are made.

(F) Copies of the records shall be made available to the Administrator upon verbal or written request.

(n)–(p) [Reserved]

(q) *Gasoline distribution—(*1) *Bulk gasoline plants.* (i) Subject to paragraph (q)(1)(v) of this section, no person may cause or allow the transfer of gasoline from a delivery vessel into a stationary storage tank located at a bulk gasoline unless:

(A) The delivery vessel and the stationary storage tank are each equipped with a vapor collection system that meets the requirements of paragraph (q)(1)(iv)(D) of this section,

(B) Each vapor collection system is operating,

(C) The delivery vessel displays the appropriate sticker pursuant to the requirements of sections 215.584 (b) or (d) of 35 Ill. Adm. Code 215 (incorporated by reference as specified in 40 CFR 52.742),

(D) The pressure relief valve(s) on the stationary storage tank and the delivery vessel are set to release at no less than 0.7 psi or the highest pressure allowed by state or local fire codes or the guidelines of the National Fire Prevention Association, and

(E) The stationary storage tank is equipped with a submerged loading pipe.

(ii) Subject to paragraph (q)(1)(vi) of this section, no person may cause or allow the transfer of gasoline from a stationary storage tank located at a bulk gasoline plant into a delivery vessel unless:

(A) The requirements set forth in paragraphs (q) (1)(i)(A) through (1)(i)(D) of this section are met, and

(B) Equipment is available at the bulk gasoline plant to provide for the submerged filling of the delivery vessel

or the delivery vessel is equipped for bottom loading.

(iii) Subject to paragraph (q)(1)(v) of this section, each owner of a stationary storage tank located at a bulk gasoline plant shall:

(A) Equip each stationary storage tank with a vapor control system that meets the requirements of paragraph (q) (1)(i) or (1)(ii) of this section, whichever is applicable,

(B) Provide instructions to the operator of the bulk gasoline plant describing necessary maintenance operations and procedures for prompt notification of the owner in case of any malfunction of a vapor control system, or

(C) Repair, replace or modify any worn out or malfunctioning component or element of design.

(iv) Subject to paragraph (q)(1)(v) of this section, each operator of a bulk gasoline plant shall:

(A) Maintain and operate each vapor control system in accordance with the owner's instructions,

(B) Promptly notify the owner of any scheduled maintenance or malfunction requiring replacement or repair of a major component of a vapor control system,

(C) Maintain gauges, meters or other specified testing devices in proper working order, and

(D) Operate the bulk plant vapor collection system and gasoline loading equipment in a manner that prevents:

(*1*) Gauge pressure from exceeding 45.7 cm (18 in.) of water and vacuum from exceeding 15.2 cm (6 in.) of water, as measured as close as possible to the vapor hose connection,

(*2*) A reading equal to or greater than 100 percent of the lower explosive limit (LEL measured as propane) when tested in accordance with the procedure described in "Control of Volatile Organic Compound Leaks from Gasoline Tank Trucks and Vapor Collection Systems", Appendix B, EPA 450/2–78–051 (which is available for purchase from the National Technical Information Services, 5285 Port Royal Road, Springfield, VA 22161), and

(*3*) Avoidable leaks of liquid during loading or unloading operations.

(E) Provide a pressure tap or equivalent on the bulk plant vapor collection system in order to allow the determination of compliance with paragraph (q)(1)(iv)(D)(*1*) of this section, and

(F) Within 15 business days after discovery of any leak by the owner, operator, or the Administrator, repair and retest a vapor collection system which exceeds the limits of paragraph (q)(1)(iv)(D) (*1*) or (*2*) of this section.

(v) The requirements of paragraphs (q) (1)(i), (1)(iii) and (1)(iv) of this section, shall not apply to:

(A) Any stationary storage tank with a capacity of less than 2,177 l (575 gal), or

(B) Any bulk gasoline plant whose daily gasoline throughtput is less than 15,140 l (4,000 gal/day) on a thirty-day rolling average.

(vi) The requirements of paragraph (q)(1)(ii) of this section shall only apply to bulk gasoline plants:

(A) Whose daily gasoline throughput is greater than or equal to 15,140 l (4,000 gal/day) on a thirty-day rolling average, and

(B) That either distribute gasoline to gasoline dispensing facilities subject to the requirements of section 215.583(a)(2) of 35 Ill. Adm. Code 215 (incorporated by reference as specified in 40 CFR 52.742) or that are in Cook, DuPage, Kane, Lake, McHenry or Will County.

(vii) Any bulk gasoline plant which is ever subject to paragraph (q)(1) (i), (ii), (iii) or (iv) of this section shall always be subject to these paragraphs.

(2) [Reserved]

(r) [Reserved]

(s) *Paint and ink manufacturing*—(1) *Applicability*. (i) Paragraph (s) shall apply to all paint and ink manufacturing plants which:

(A) Include process emission sources not subject to subparts (B), (Q) (excluding sections 215.432 and 215.436), (R) (excluding sections 215.447, 215.450, and 215.452), (S), (V), (X), (Y) (sections 215.582, 215.583, and 215.584), or (Z) of 35 Ill. Adm. Code 215 (incorporated by reference as specified in 40 CFR 52.742), or to paragraphs (d), (e) (excluding paragraph (e)(1)(i)(L)), (h) (excluding paragraph (h)(5)), (i), (j), or (q)(1) of this section; and which as a group both:

(*1*) Have maximum theoretical emissions of 91 Mg (100 tons) or more per calendar year of VOM if no air pollution control equipment were used, and

(*2*) Are not limited to less than 91 Mg (100 tons) of VOM emissions per calendar year in the absence of air pollution control equipment, through production or capacity limitations contained in a federally enforceable construction permit or a SIP or FIP revision, or

(B) Produce more than 7,570,820 l (2,000,000 gal) per calendar year of paint or ink formulations, which contain less than 10 percent (by weight) water, and ink formulations not containing as the primary solvents water, Magie oil or glycol.

(ii) For the purposes of paragraph (s) of this section, uncontrolled VOM emissions are the emissions of VOM which would result if no air pollution control equipment were used.

(2) *Exemption for waterbase material and heatset-offset ink.* The requirements of paragraphs (s)(4) and (s)(5) of this section and paragraph (s)(7)(i) of this section shall not apply to equipment while it is being used to produce either:

(i) Paint or ink formulations which contain 10 percent or more (by weight) water, or

(ii) Inks containing Magie oil and glycol as the primary solvent.

(3) *Permit conditions.* No person shall violate any condition in a federally enforceable permit when the condition results in exclusion of the plant or an emission source from paragraph (s).

(4) *Open-top mills, tanks, vats or vessels.* No person shall operate an open-top mill, tank, vat or vessel with a volume of more than 45 l (12 gal) for the production of paint or ink unless:

(i) The mill, tank, vat or vessel is equipped with a cover which completely covers the mill, tank, vat or vessel opening except for an opening no larger than necessary to allow for safe clearance for a mixer shaft. Such cover shall extend at least 1.27 cm (0.5 in.) beyond the outer rim of the opening or be attached to the rim.

(ii) The cover remains closed except when production, sampling, maintenance or inspection procedures require access.

(iii) The cover is maintained in good condition such that, when in place, it maintains contact with the rim of the opening for at least 90 percent of the circumference of the rim.

(5) *Grinding mills.* (i) No person shall operate a grinding mill for the production of paint or ink which is not maintained in accordance with the manufacturer's specifications.

(ii) No person shall operate a grinding mill fabricated or modified after the effective date of paragraph (s) which is not equipped with fully enclosed screens.

(iii) The manufacturer's specifications shall be kept on file at the plant by the owner or operator of the grinding mill and be made available to any person upon verbal or written request during business hours.

(6) *Storage tanks.* (i) The owner or operator shall equip tanks storing VOL with a vapor pressure greater than 10 kPa (1.5 psi) at 20 °C (68 °F) with pressure/vacuum conservation vents set as a minimum at +/–0.2 kPa (0.029 psi). These controls shall be operated at all times. An alternative air pollution control system may be used if it results in a greater emission reduction than these controls. Any alternative control system can only be allowed if approved by the Administrator as a SIP or FIP revision.

(ii) Stationary VOL storage containers with a capacity greater than 946 l (250 gal) shall be equipped with a submerged-fill pipe or bottom fill. These controls shall be operated at all times. An alternative control system can only be allowed if approved by the Administrator as a SIP or FIP revision.

(7) *Leaks.* The owner or operator of a paint or ink manufacturing plant shall, for the purpose of detecting leaks, conduct an equipment monitoring program as set forth below:

(i) Each pump shall be checked by visual inspection each calendar week for indications of leaks, that is, liquids dripping from the pump seal. If there are indications of liquids dripping from the pump seal, the pump shall be repaired as soon as practicable, but no later than 15 calendar days after the leak is detected.

(ii) Any pump, valve, pressure relief valve, sampling connection, open-ended valve and flange or connector containing a fluid which is at least 10 percent VOM by weight which appears to be leaking on the basis of sight, smell

or sound shall be repaired as soon as practicable, but no later than 15 calendar days after the leak is detected.

(iii) A weather proof, readily visible tag, in bright colors such as red or yellow, bearing an identification number and the date on which the leak was detected shall be attached to leaking equipment. The tag may be removed upon repair, that is, when the equipment is adjusted or otherwise altered to allow operation without leaking.

(iv) When a leak is detected, the owner or operator shall record the date of detection and repair and the record shall be retained at the plant for at least two years from the date of each detection or each repair attempt. The record shall be made available to any person upon verbal or written request during business hours.

(8) *Clean up.* (i) No person shall clean paint or ink manufacturing equipment with organic solvent unless the equipment being cleaned is completely covered or enclosed except for an opening no larger than necessary to allow safe clearance for proper operation of the cleaning equipment, considering the method and materials being used.

(ii) No person shall store organic wash solvent in other than closed containers, unless closed containers are demonstrated to be a safety hazard, or dispose of organic wash solvent in a manner such that more than 20 percent by weight is allowed to evaporate into the atmosphere.

(9) *Compliance schedule.* Every owner or operator of an emission source subject to the control requirements of paragraph (s) of this section shall comply with the requirements of paragraph (s) of this section on and after July 1, 1991.

(10) *Recordkeeping and reporting.* (i) Upon request by the Administrator, the owner or operator of an emission source which claims to be exempt from the requirements of paragraph (s) of this section shall submit records to the Administrator within 30 calendar days from the date of the request which document that the emission source is in fact exempt from paragraph (s) of this section. These records shall include (but are not limited to) the percent water (by weight) in the paint or ink being produced and the quantity of Magie oil, glycol and other solvents in the ink being produced.

(ii) Every owner or operator of an emission source which is subject to the requirements of paragraph (s) of this section shall maintain all records necessary to demonstrate compliance with those requirements at the facility for three years.

(t) [Reserved]

(u) *Miscellaneous fabricated product manufacturing processes*—(1) *Applicability.* (i) The requirements of paragraph (u) of this section shall apply to a plant's miscellaneous fabricated product manufacturing process emission sources which are not included within any of the source categories specified in subparts (B), (Q) (excluding sections 215.432 and 215.436), (R) (excluding sections 215.447, 215.450, and 215.452), (S), (V), (X), (Y) (sections 215.582, 215.583, and 215.584), or (Z) of 35 Ill. Adm. Code 215 (incorporated by reference as specified in 40 CFR 52.742), or specified in paragraph (d), (e), (h), (i), (j), or (q)(1) of this section; if the plant is subject to paragraph (u) of this section. A plant is subject to paragraph (u) of this section if it contains process emission sources, not regulated by subparts (B), (Q) (excluding sections 215.432 and 215.436), (R) (excluding sections 215.447, 215.450, and 215.452), (S), (V), (X), (Y) (sections 215.582, 215.583, 215.584), or (Z) of 35 Ill. Adm. Code 215 (incorporated by reference as specified in 40 CFR 52.742), or by paragraph (d), (e) (excluding paragraph (e)(1)(i)(L)), (h) (excluding paragraph (h)(5)), (i), (j), or (q)(1) of this section; which as a group both:

(A) Have maximum theoretical emissions of 91 Mg (100 tons) or more per calendar year of VOM if no air pollution control equipment were used, and

(B) Are not limited to less than 91 Mg (100 tons) of VOM emissions per calendar year in the absence of air pollution control equipment, through production or capacity limitations contained in a federally enforceable construction permit or a SIP or FIP revision.

(ii) If a plant ceases to fulfill the criteria of paragraph (u)(1)(i) of this section, the requirements of paragraph (u) of this section shall continue to apply to a miscellaneous fabricated products

manufacturing process emission source which was ever subject to the control requirements of paragraph (u)(3) of this section.

(iii) No limits under paragraph (u) of this section shall apply to emission sources with emissions of VOM to the atmosphere less than or equal to 0.91 Mg (1.0 ton) per calendar year if the total emissions from such sources not complying with paragraph (u)(3) of this section does not exceed 4.5 Mg (5.0 tons) per calendar year.

(iv) For the purposes of paragraph (u) of this section, an emission source shall be considered regulated by a subpart (of the Illinois rules) or paragraph if it is subject to the limits of that subpart (of the Illinois rules) or paragraph. An emission source is not considered regulated by a subpart (of the Illinois rules) or paragraph if its emissions are below the applicability cutoff level or if the source is covered by an exemption.

(v) For the purposes of paragraph (u) of this section, uncontrolled VOM emissions are the emissions of VOM which would result if no air pollution control equipment were used.

(2) *Permit conditions.* No person shall violate any condition in a permit when the condition results in exclusion of the plant or an emission source from paragraph (u) of this section.

(3) *Control requirements.* Every owner or operator of an emission source subject to paragraph (u) of this section shall comply with the requirements of paragraph (u)(3) (i), (ii) or (iii) of this section:

(i) Emission capture and control techniques which achieve an overall reduction in uncontrolled VOM emissions of at least 81 percent, or

(ii) For coating lines, the daily-weighted average VOM content shall not exceed 0.42 kg VOM/l (3.5 lbs VOM/gal) of coating as applied (minus water and any compounds which are specifically exempted from the definition of VOM) during any day. Owners and Code 215 (incorporated by reference as specified in 40 CFR 52.742), or

(iii) An alternative control plan which has been approved by the Administrator as a SIP or FIP revision.

(4) *Compliance schedule.* Every owner or operator of an emission source subject to the control requirements of paragraph (u) of this section shall comply with the requirements of paragraph (u) of this section on and after July 1, 1991.

(5) *Testing.* Any owner or operator of a VOM emission source which is subject to paragraph (u) of this section shall demonstrate compliance with paragraph (u)(3) of this section by using the applicable test methods and procedures specified in paragraph (a)(4) of this section.

(6) The control requirements in this paragraph apply to the adhesive globe coating operations at Replogle's Broadview facility in Cook County, Illinois, instead of the control requirements in paragraph (u)(3) of this section.

(i) After October 6, 1991, no coatings shall at any time be applied which exceed the following emission limitations for the specified coating.

(A) 7.0 lbs VOM per gallon of adhesive coating (minus water and any compounds which are specifically exempted from the definition of VOM) as applied to coat globes. Such coating consists of #7879446 Methylene Chloride (RGI #01004100). The Administrator shall be notified at least ten (10) days prior to the use of any replacement adhesive for coating globes.

(B) [Reserved]

(ii) After October 6, 1991, the volume of coatings used shall not exceed the following:

(A) 572 gallons per year total for all coatings specified in paragraph (u)(6)(i)(A) of this section. The yearly volume of coatings used are to be calculated as follows:

(*1*) Compute the volume of specified coating used each month by the 15th of the following month.

(*2*) By the 15th of each month, add the monthly coating use for the 12 previous months (to obtain the yearly volume of coatings used).

(B) [Reserved]

(iii) Beginning on October 6, 1991, the owner and operator of the Replogle Globes, Inc. plant in Broadview, Illinois shall keep the following records for each month. All records shall be retained at Replogle Globes, Inc. for three (3) years and shall be made available to the Administrator on request:

(A) The name and identification number of each coating as applied on any adhesive globe coating line.

(B) The weight of VOM per volume and the volume of each coating (minus water and any compounds which are specifically exempted from the definition of VOM) as applied each month on any adhesive globe coating line.

(7) The control requirements in this paragraph apply to the glass candle container coating line(s) and silk screening machines at the Candle Corporation of America (CCA), Chicago, Illinois facility, instead of the control requirements in paragraph (u)(3) of this section.

(i) After June 1, 1992, no coatings or inks shall at any time be applied, at any coating or ink applicator, which exceed the following emission limitations for the specified coating or ink.

(A) 6.04 pounds (lbs) volatile organic material (VOM) per gallon of clear lacquer/varnish (minus water and any compounds which are specifically exempted from the definition of VOM) as applied to coat glass candle containers. Such clear lacquer/varnish (multicolor) is identified as LP3500. The Administrator must be notified at least 10 days prior to the use of any replacement clear lacquers/varnishes.

(B) 5.23 lbs VOM per gallon of translucent coating (minus water and any compounds which are specifically exempted from the definition of VOM) as applied to coat glass candle containers. Such translucent coating (multi-color) is identified as LP3603. The Administrator must be notified at least 10 days prior to the use of any replacement translucent coatings.

(C) 5.84 lbs VOM per gallon of white lacquer (minus water and any compounds which are specifically exempted from the definition of VOM) as applied to coat glass candle containers. Such white lacquer is identified as LP3507. The Administrator must be notified at least 10 days prior to the use of any replacement white lacquers.

(D) 3.40 lbs VOM per gallon of fast dry enamel silk screen printing ink (minus water and any compounds which are specifically exempted from the definition of VOM) as applied to print onto glass candle containers.

(ii) After June 1, 1992, the volume of coating and ink used shall not exceed the following:

(A) 2,164 gallons per month total for all coatings specified in paragraph (u)(7)(i)(A) of this section.

(B) 369 gallons per month total for all coatings specified in paragraph (u)(7)(i)(B) of this section.

(C) 49 gallons per month total for all coatings specified in paragraph (u)(7)(i)(C) of this section.

(D) 50 gallons per month total for all inks specified in paragraph (u)(7)(i)(D) of this Section.

(iii) Beginning on June 1, 1992, the owner and operator of CCA's plant in Chicago, Illinois, shall keep the following records for each month. All records shall be retained at CCA for 3 years and shall be made available to the Administrator on request.

(A) The name and identification number of each coating and ink as applied on any glass candle container coating line or silk screening machine.

(B) The weight of VOM per volume and the volume of each coating and ink (minus water and any compounds which are specifically exempted from the definition of VOM) as applied each month on any glass candle container coating line or silk screening machine.

(iv) After June 1, 1992, no more than 100 gallons per month of cleaning solvent is allowed to be used on the glass candle container coating line(s) at CCA. The only cleaning solvents allowed for use are acetone (identified as LP3525) and methyl ethyl ketone (identified as LP3520). Beginning on June 1, 1992, CCA shall keep monthly records of the type and volume of all cleaning solvents used. All such records shall be retained at CCA for 3 years and shall be made available to the Administrator on request.

(v) After June 1, 1992, no more than 50 gallons per month of cleaning solvent is allowed to be used on the glass candle container silk screening machines at CCA. The only cleaning solvent allowed for use is petroleum naphtha (identified as light aromatic naphtha with 7.28 lbs VOM per gallon, minus water and any compounds which are specifically exempted from the definition of VOM). Beginning on June 1, 1992, CCA shall keep monthly records

of the type and volume and the weight of VOM per volume (minus water and any compounds which are specifically exempted from the definition of VOM) of all cleaning solvents used on the glass candle container silk screening machines. All such records shall be retained at CCA for 3 years and shall be made available to the Administrator on request.

(8) The control, recordkeeping and reporting requirements in this paragraph apply to the cellulose food casing manufacturing operations at the Viskase Corporation plant in Bedford Park, Illinois (Cook County) instead of the requirements in paragraph (v) of this section, the other parts of paragraph (u) of this section, and the recordkeeping requirements in paragraph (y) of this section. Unless otherwise stated, the following requirements must be met by Viskase on and after November 21, 1995.

(i) VOM emissions shall never exceed 3.30 tons per day.

(ii) VOM emissions shall not exceed 2.22 tons per day, on a monthly average, during June, July, and August.

(iii) VOM emissions shall not exceed 2.44 tons per day during June, July, and August.

(iv) Compliance with the emission limits in paragraphs (u)(8) (i) through (iii) of this section, and the records in paragraph (u)(8)(v) of this section, shall be determined using an emission factor of "0.72 pounds of VOM emissions per pound of carbon disulfide consumed."

(v) Viskase must keep the following daily records:

(A) The pounds of carbon disulfide per charge for its Fibrous process. If charges with different levels of carbon disulfide per charge are used the same day, a separate record must be kept for each level of carbon disulfide per charge.

(B) The pounds of carbon disulfide per charge for its NOJAX process. If charges with different levels of carbon disulfide per charge are used the same day, a separate record must be kept for each level of carbon disulfide per charge.

(C) The number of charges per day, for each level of carbon disulfide per charge, used in Viskase's Fibrous process.

(D) The number of charges per day, for each level of carbon disulfide per charge, used in Viskase's NOJAX process.

(E) The total quantity of carbon disulfide used per day in Viskase's Fibrous process, the total quantity of carbon disulfide used per day in Viskase's NOJAX process, and the daily VOM emissions resulting from use of the carbon disulfide.

(F) The monthly use of carbon disulfide, and the monthly VOM emissions resulting from use of the carbon disulfide, during June, July, and August.

(vi) Any violation of the emission limits in paragraphs (u)(8) (i) through (iii) of this section must be reported to USEPA within 30 days of its occurrence.

(vii) In order to determine daily and monthly VOM emissions, the test methods in paragraph (a)(4) of this section may be used in addition to, and take precedence over, the emission factor cited in paragraph (u)(8)(iv) of this section. Method 15 is to be used instead of Methods 18, 25, and 25A when the test methods in paragraph (a)(4) of this section are used to determine VOM emissions from Viskase's cellulose food casing facility.

(v) *Miscellaneous formulation manufacturing processes*—(1) *Applicability*. (i) The requirements of paragraph (v) of this section shall apply to a plant's miscellaneous formulation manufacturing process emission sources, which are not included within any of the source categories specified in subpart (B), (Q) (excluding sections 215.432 and 215.436), (R) (excluding sections 215.447, 215.450, and 215.452),(S), (V), (X), (Y) (sections 215.582, 215.583, and 215.584), or (Z) of 35 Ill. Adm. Code 215 (incorporated by reference as specified in 40 CFR 52.742), or specified in paragraph (d), (e), (h), (i), (j), or (q)(1) of this section; if the plant is subject to paragraph (v) of this section. A plant is subject to paragraph (v) of this section if it contains process emission sources, not regulated by subpart (B), (Q) (excluding sections 215.432 and 215.436), (R) (excluding sections 215.447, 215.450, and 215.452), (S), (V), (X), (Y) (sections 215.582, 215.583, and 215.584), or (Z) of 35 Ill. Adm. Code 215 (incorporated by reference as specified in 40 CFR 52.742), or

by paragraph (d), (e) (excluding paragraph (e)(1)(i)(L)), (h) (excluding paragraph (h)(5)), (i), (j), or (q)(1) of this section; which as a group both:

(A) Have maximum theoretical emissions of 91 Mg (100 tons) or more per calendar year of VOM if no air pollution control equipment were used, and

(B) Are not limited to less than 91 Mg (100 tons) of VOM emissions per calendar year in the absence of air pollution control equipment, through production or capacity limitations contained in a federally enforceable construction permit or a SIP or FIP revision.

(ii) If a plant ceases to fulfill the criteria of paragraph (v)(1)(i) of this section, the requirements of paragraph (v) of this section shall continue to apply to a miscellaneous formulation manufacturing process emission source which was ever subject to the control requirements of paragraph (v)(3) of this section.

(iii) No limits under paragraph (v) of this section shall apply to emission sources with emissions of VOM to the atmosphere less than or equal to 2.3 Mg (2.5 tons) per calendar year if the total emissions from such sources not complying with paragraph (v)(3) of this section does not exceed 4.5 Mg (5.0 tons) per calendar year.

(iv) For the purposes of paragraph (v) of this section, an emission source shall be considered regulated by a subpart (of the Illinois rules) or paragraph if it is subject to the limits of that subpart (of the Illinois rules) or paragraph. An emission source is not considered regulated by a subpart (of the Illinois rules) or paragraph if its emissions are below the applicability cutoff level or if the source is covered by an exemption.

(v) For the purposes of paragraph (v) of this section uncontrolled VOM emissions are the emissions of VOM which would result if no air pollution control equipment were used.

(2) *Permit conditions.* No person shall violate any condition in a permit when the condition results in exclusion of the plant or an emission source from paragraph (v) of this section.

(3) *Control requirements.* Every owner or operator of an emission source subject to paragraph (v) of this section shall comply with the requirements of paragraph (v)(3) (i) or (ii) of this section.

(i) Emission capture and control techniques which achieve an overall reduction in uncontrolled VOM emissions of at least 81 percent, or

(ii) An alternative control plan which has been approved by the Administrator as a SIP or FIP revision.

(4) *Compliance schedule.* Every owner or operator of an emission source subject to the control requirements of paragraph (v) of this section shall comply with the requirements of paragraph (v) of this section on and after July 1, 1991.

(5) *Testing.* Any owner or operator of a VOM emission source which is subject to paragraph (v) of this section shall demonstrate compliance with paragraph (v)(3) of this section by using the applicable test methods and procedures specified in paragraph (a)(4) of this section.

(6) The control requirements in this paragraph apply to the 7 blenders and 3 moguls of the adhesive coating solution formulation (compounding) operations at the Minnesota Mining and Manufacturing Corporation's (3M) Bedford Park facility in Cook County, Illinois, instead of the control requirements in paragraph (v)(3) of this section.

(i) After September 1, 1991, the following operating restrictions shall apply to 3M's Bedford Park, Illinois, compounding operations.

(A) The combined operating hours for all blenders shall not exceed 8,400 hours per quarter (rolled on a monthly basis). The combined quarterly operating hours of all blenders are to be calculated as follows:

(*1*) By the 15th of each month, compute the combined monthly operating hours of all blenders during the previous month.

(*2*) By the 15th of each month, add the monthly operating hours of all blenders for the 3 previous months (to obtain the combined quarterly operating hours of all blenders).

(B) The combined operating hours for all moguls shall not exceed 4,200 hours per quarter (rolled on a monthly basis). The quarterly operating hours of all moguls are to be calculated as follows:

(*1*) By the 15th of each month, compute the combined monthly operating hours of all moguls during the previous month.

(*2*) By the 15th of each month, add the monthly operating hours of all moguls for the 3 previous months (to obtain the combined quarterly operating hours of all moguls).

(ii) Beginning on September 1, 1991, the owner and operator of the 3M Bedford Park Plant in Bedford Park, Illinois, shall keep the following records. These records shall be compiled on a monthly basis, be retained at the 3M facility for a period of 3 years, and be made available to the Administrator upon request.

(A) Separate monthly records for each of the 7 blenders identifying each batch and the length of each batch as well as the total monthly hours of operation for all blenders.

(B) Separate monthly records for each of the 3 moguls identifying each batch and the length of each batch as well as the total monthly hours of operation for all moguls.

(w) *Miscellaneous organic chemical manufacturing processes*—(1) *Applicability*. (i) The requirements of paragraph (w) of this section shall apply to a plant's miscellaneous organic chemical manufacturing process emission sources which are not included within any of the source categories specified in subparts (B), (Q) (excluding sections 215.432 and 215.436), (R) (excluding sections 215.447, 215.450, and 215.452), (S), (V), (X), (Y) (sections 215.582, 215.583, and 215.584), or (Z) of 35 Ill. Adm. Code 215 (incorporated by reference as specified in 40 CFR 52.742), or specified in paragraph (d), (e), (h), (i), (j), or (q)(1) of this section; if the plant is subject to paragraph (w) of this section. A plant is subject to paragraph (w) of this section if it contains process emission sources, not regulated by subparts (B), (Q) (excluding sections 215.432 and 215.436), (R) (excluding sections 215.447, 215.450, and 215.452), (S), (V), (X), (Y) (sections 215.582, 215.583, and 215.584), or (Z) of 35 Ill. Adm. Code 215 (incorporated by reference as specified in 40 CFR 52.742), or by paragraph (d), (e) (excluding paragraph (e)(1)(i)(L)), (h) (excluding paragraph (h)(5)), (i), (j), or (q)(1) of this section; which as a group both:

(A) Have maximum theoretical emissions of 91 Mg (100 tons) or more per calendar year of VOM if no air pollution control equipment were used, and

(B) Are not limited to less than 91 Mg (100 tons) of VOM emissions per calendar year in the absence of air pollution control equipment, through production or capacity limitations contained in a federally enforceable construction permit or a SIP or FIP revision.

(ii) If a plant ceases to fulfill the criteria of paragraph (w)(1)(i) of this section, the requirements of paragraph (w) of this section shall continue to apply to a miscellaneous organic chemical manufacturing process emission source which was ever subject to the control requirements of paragraph (w)(3) of this section.

(iii) No limits under paragraph (w) of this section shall apply to emission sources with emissions of VOM to the atmosphere less than or equal to 0.91 Mg (1.0 ton) per calendar year if the total emissions from such sources not complying with paragraph (w)(3) of this section does not exceed 4.5 Mg (5.0 tons) per calendar year.

(iv) For the purposes of paragraph (w) of this section, an emission source shall be considered regulated by a subpart (of the Illinois rules) or paragraph if it is subject to the limits of that subpart (of the Illinois rules) or paragraph. An emission source is not considered regulated by a subpart (of the Illinois rules) or paragraph if its emissions are below the applicability cutoff level or if the source is covered by an exemption.

(v) For the purposes of paragraph (w) of this section, uncontrolled VOM emissions are the emissions of VOM which would result if no air pollution control equipment were used.

(2) *Permit conditions.* No person shall violate any condition in a permit when the condition results in exclusions of the plant or an emission source from paragraph (w) of this section.

(3) *Control requirements.* Every owner or operator of an emission source subject to paragraph (w) of this section shall comply with the requirements of

paragraph (w)(3)(i) or (ii) of this section.

(i) Emission capture and control techniques which achieve an overall reduction in uncontrolled VOM emissions of at least 81 percent, or

(ii) An alternative control plan which has been approved by the Administrator as a SIP or FIP revision.

(4) *Compliance schedule.* Every owner or operator of an emission source subject to the control requirements of paragraph (w) of this section shall comply with the requirements of paragraph (w) of this section on and after July 1, 1991.

(5) *Testing.* Any owner or operator of a VOM emission source which is subject to paragraph (w) shall demonstrate compliance with paragraph (w)(3) of this section by using the applicable test methods and procedures specified in paragraph (a)(4) of this section.

(x) *Other emission sources*—(1) *Applicability.* (i) The requirements of paragraph (x) of this section shall apply to a plant's VOM emission sources, which are not included within any of the source categories specified in subpart (B), (Q) (excluding sections 215.432 and 215.436), (R) (excluding sections 215.447, 215.450, and 215.452), (S), (V), (X), (Y) (sections 215.582, 215.583, and 215.584), or (Z) of 35 Ill. Adm. Code 215 (incorporated by reference as specified in 40 CFR 52.742), or specified in paragraph (d), (e), (h), (i), (j), (q)(1), (s), (u), (v) or (w) of this section; if the plant is subject to paragraph (x) of this section. A plant is subject to paragraph (x) of this section if it contains process emission sources, not regulated by subpart (B), (Q) (excluding sections 215.432 and 215.436), (R) (excluding sections 215.447, 215.450, and 215.452), (S), (V), (X), (Y) (sections 215.582, 215.583, and 215.584), or (Z) of 35 Ill. Adm. Code 215 (incorporated by reference as specified in 40 CFR 52.742), or by paragraph (d), (e) of this section (excluding paragraph (e)(1)(i)(L)), (h) (excluding paragraph (h)(5)), (i), (j), or (q)(1) of this section; which as a group both:

(A) Have maximum theoretical emissions of 91 Mg (100 tons) or more per calendar year of VOM if no air pollution control equipment were used, and

(B) Are not limited to less than 91 Mg (100 tons) of VOM emissions per calendar year in the absence of air pollution control equipment, through production or capacity limitations contained in a federally enforceable construction permit or a SIP of FIP revision.

(ii) If a plant ceases to fulfill the criteria of paragraph (x)(1)(i) of this section, the requirements of paragraph (x) of this section shall continue to apply to an emission source which was ever subject to the control requirements of paragraph (x)(3) of this section.

(iii) No limits under paragraph (x) of this section shall apply to emission sources with emissions of VOM to the atmosphere less than or equal to 2.3 Mg (2.5 tons) per calendar year if the total emissions from such sources not complying with paragraph (x)(3) of this section does not exceed 4.5 Mg (5.0 tons) per calendar year.

(iv) For the purposes of paragraph (x) of this section, an emission source shall be considered regulated by a subpart (of the Illinois rules) or paragraph if it is subject to the limits of that subpart (of the Illinois rules) or paragraph. An emission source is not considered regulated by a subpart (of the Illinois rules) or paragraph of its emissions are below the applicability cutoff level or if the source is covered by an exemption.

(v) The control requirements in paragraphs (u), (v), (w), and (x) of this section shall not apply to sewage treatment plants, vegetable oil processing plants, coke ovens (including by-product recovery plants), fuel combustion sources, bakeries, barge loading facilities, jet engine test cells, pharmaceutical manufacturing, production of polystyrene foam insulation board (including storage and extrusion of scrap where blowing agent is added to the polystyrene resin at the plant), production of polystyrene foam packaging (*not* including storage and extrusion of scrap where blowing agent is added to the polystyrene resin at the plant), and iron and steel production.

(2) *Permit conditions.* No person shall violate any condition in a permit when the condition results in exclusion of the plant or an emission source from paragraph (x) of this section.

(3) *Control requirements.* Every owner or operator of an emission source subject to paragraph (x) of this section shall comply with the requirements of paragraph (x)(3) (i), (ii) or (iii) of this section.

(i) Emission capture and control equipment which achieve an overall reduction in uncontrolled VOM emissions of at least 81 percent, or

(ii) For coating lines, the daily-weighted average VOM content shall not exceed 0.42 kg VOM/l (3.5 lbs VOM/gal) of coating (minus water and any compounds which are specifically exempted from the definition of VOM) as applied during any day. Owners and operators complying with this paragraph are not required to comply with section 215.301 of 35 Ill. Adm. Code 215 (incorporated by reference as specified in 40 CFR 52.742), or

(iii) An alternative control plan which has been approved by the Administrator as a SIP or FIP revision.

(4) *Compliance schedule.* Every owner or operator of an emissions source which is subject to paragraph (x) of this section shall comply with the requirements of paragraph (x) of this section on and after July 1, 1991.

(5) *Testing.* Any owner or operator of a VOM emission source which is subject to paragraph (x) of this section shall demonstrate compliance with paragraph (x)(3) of this section by using the applicable test methods and procedures specified in paragraph (a)(4) of this section.

(6) The control requirements in this paragraph apply to the varnish operations at the General Motors Corporation, Electro-Motive Division Plant (GMC Electro-Motive), LaGrange, Illinois, instead of the control requirements in paragraph (x)(3) of this section.

(i) After July 1, 1991, no coatings shall at any time be applied which exceed the following emission limitations for the specified coating.

(A) 8.0 lbs VOM per gallon of coating (minus water and any compounds which are specifically exempted from the definition of VOM) as applied at each coating applicator to coat Nomex rings. Such coating consists of Monsanto Skybond 705 Polyamide Resin (EMD P/N 9088817) and diluents. The Administrator must be notified at least 10 days prior to the use of any replacement coating(s) and/or diluents for coating Nomex rings.

(B) 6.8 lbs VOM per gallon of coating (minus water and any compounds which are specifically exempted from the definition of VOM) as applied at each coating applicator for any coatings not specified in paragraph (x)(6)(i)(A) of this section.

(ii) After July 1, 1991, the volume of coatings used shall not exceed the following:

(A) 600 gallons per year total for all coatings specified in paragraph (x)(6)(i)(A) of this section. The yearly volume of coatings used are to be calculated as follows:

(1) Compute the volume of specified coating used each month by the 15th of the following month.

(2) By the 15th of each month, add the monthly coating use for the 12 previous months (to obtain the yearly volume of coatings used).

(B) 28,500 gallons per year total for all coatings other than those specified in paragraph (x)(6)(i)(A) of this section. The yearly volume of coatings used are to be calculated as specified in paragraphs (x)(6)(ii)(A)(1) and (x)(6)(ii)(A)(2) of this section.

(iii) Beginning on July 1, 1991, the owner and operator of the General Motors Corporation Electro-Motive Division Plant in LaGrange, Illinois shall keep the following records for each month. All records shall be retained at General Motors for 3 years and shall be made available to the Administrator on request.

(A) The name and identification number of each coating as applied on any coating line within the varnish operation.

(B) The weight of VOM per volume and the volume of each coating (minus water and any compounds which are specifically exempted from the definition of VOM) as applied each month on any coating line within the varnish operation.

(7) The control, recordkeeping, and monitoring requirements in this paragraph apply to the aluminum rolling mills at the Reynolds Metals Company's McCook Sheet & Plate Plant in McCook, Illinois (Cook County) instead

of the control requirements and test methods in the other parts of paragraph (x), and the recordkeeping requirements in paragraph (y) of this section. All of the following requirements must be met by Reynolds on and after July 7, 1995.

(i) Only organic lubricants with initial and final boiling points between 460 degrees F and 635 degrees F, as determined by a distillation range test using ASTM method D86–90, are allowed to be used at Reynolds' aluminum sheet cold rolling mills numbers 1 and 7. All incoming shipments of organic lubricant for the number 1 and 7 mills must be sampled and each sample must undergo a distillation range test to determine the initial and final boiling points using ASTM method D86–90. A grab rolling lubricant sample shall be taken from each operating mill on a monthly basis and each sample must undergo a distillation range test, to determine the initial and final boiling points, using ASTM method D86–90.

(ii) An oil/water emulsion, with no more than 15 percent by weight of petroleum-based oil and additives, shall be the only lubricant used at Reynolds' aluminum sheet and plate hot rolling mills, 120 inch, 96 inch, 80 inch, and 145 inch mills. A grab rolling lubricant sample shall be taken from each operating mill on a monthly basis and each sample shall be tested for the percent by weight of petroleum-based oil and additives by ASTM Method D95–83.

(iii) The temperature of the inlet supply of rolling lubricant for aluminum sheet cold rolling mills numbers 1 and 7 shall not exceed 150°F, as measured at or after (but prior to the lubricant nozzles) the inlet sump. The temperature of the inlet supply of rolling lubricant for the aluminum sheet and plate hot rolling mills, 120 inch, 96 inch, 80 inch, and 145 inch mills shall not exceed 200°F, as measured at or after (but prior to the lubricant nozzles) the inlet sump. Coolant temperatures shall be monitored at all the rolling mills by use of thermocouple probes and chart recorders or electronic data recorders.

(iv) All distillation test results for cold mill lubricants, all percent oil test results for hot mill lubricants, all coolant temperature recording charts and/or temperature data obtained from electronic data recorders, and all oil/water emulsion formulation records, shall be kept on file, and be available for inspection by USEPA, for three years.

(8) The control and recordkeeping requirements in this paragraph apply to the silk screen presses and associated ovens, cleaning operations and laminators at Parisian's Novelty Company (Parisian), Chicago, Illinois, facility, instead of the control requirements in paragraphs (x)(8) (u)(3) and (x)(3) of this section and the recordkeeping requirements in paragraph (x)(8)(y) of this section.

(i) After March 1, 1993, no coatings or inks shall at any time be applied, at any coating or ink applicator, which exceed the following emission limitations for the specified coating or ink.

(A) 6.65 pounds (lbs) volatile organic material (VOM) per gallon of ink (minus water and any compounds which are specifically exempted from the definition of VOM) as applied on Parisian's silk screen presses.

(B) 6.4 lbs VOM per gallon of adhesive coating (minus water and any compounds which are specifically exempted from the definition of VOM) as applied on Parisian's laminators. Such adhesive is identified as MIX #963.

(ii) After March 1, 1993, the volume of coating and ink used shall not exceed the following:

(A) 2,556 gallons per year total for all inks. The yearly volume of inks used is to be calculated as follows:

(*1*) Compute the volume of ink used each month by the 15th of the following month.

(*2*) By the 15th of each month, add the monthly ink usage for the 12 previous months (to obtain the yearly volume of ink used).

(B) 780 gallons per year total for all coatings specified in paragraph (x)(8)(i)(B) of this section. The yearly volume of coatings used are to be calculated as specified in paragraphs (x)(8)(ii)(A)(*1*) and (x)(8)(ii)(A)(*2*) of this section.

(iii) Beginning on March 1, 1993, the owner and operator of Parisian's plant in Chicago, Illinois, shall keep the following records for each month. All

records shall be retained at Parisian for 3 years and shall be made available to the Administrator on request.

(A) The name and identification number of each coating as applied on any laminator.

(B) The weight of VOM per volume and the volume of each coating (minus water and any compounds which are specifically exempted from the definition of VOM) as applied each month on any laminator.

(C) The weight of VOM per volume and the volume of each type of ink (minus water and any compounds which are specifically exempted from the definition of VOM) as applied each month on any screen press.

(iv) After March 1, 1993, no more than 84 gallons per year of denatured alcohol may be used for cleaning labels at Parisian. The yearly volume of denatured alcohol used is to be calculated as specified in paragraphs (x)(8)(ii)(A)(*1*) and (x)(8)(ii)(A)(*2*) of this section. Beginning on March 1, 1993, Parisian shall keep monthly records of the type, volume, and VOM content of all solvents used for label cleaning. These records shall be retained at Parisian for 3 years and shall be made available to the Administrator on request.

(v) After March 1, 1993, no more than 7,932 gallons per year of screen wash #956 may be used on Parisian's screen cleaner. The yearly volume of screen wash #956 used is to be calculated as specified in paragraphs (x)(8)(ii)(A)(*1*) and (x)(8)(ii)(A)(*2*) of this section. Beginning on March 1, 1993, Parisian shall keep monthly records of the type, volume, and VOM content of all cleaning compounds used on Parisian's screen cleaner. These records shall be retained at Parisian for 3 years and shall be made available to the Administrator on request.

(vi) After March 1, 1993, only those cleaners specifically identified in paragraphs (x)(8)(iv) and (x)(8)(v) of this section may be used at Parisian.

(9) The control requirements in this paragraph apply to the process sources listed in paragraph (x)(9)(i)(A) of this section at the Nalco Chemical Company facility in Bedford Park, Illinois, instead of the control requirements in paragraph (x)(3) of this section.

(i) *Production and Operation Restrictions.*

(A) On and after October 1, 1992, the maximum volatile organic compound (VOC) emissions per batch, the 12-month rolling average number of batches per year, and the peak limit of batches per month shall not exceed the following limits:

Source	Maximum VOC emissions, lb/batch	12-mo. rolling average limit batch/yr	Peak batch limit, batch/month
(*1*) System 1 charge	0.16	280	33
System 1 purge	1.35		
(*2*) 24–T–156, 157	2.60	300	33
(*3*) 28–T–217, 234	0.23	402	45
(*4*) 28–T–214–216	5.70	603	65
(*5*) 20–R–182, 185	0.02	72	8
(*6*) 20–R–130	0.07	340	38
(*7*) 20–R–155	0.21	254	29
(*8*) 20–WT–174	0.21	254	29
(*9*) 12–T–97–99	4.6E–4 lb/hr	8,760 hr/yr	744 hr/mo
(*10*) 12–T–95	4.0E–6 lb/hr	8,760 hr/yr	744 hr/mo
(*11*) 12–T–96	7.7E–5 lb/hr	8,760 hr/yr	744 hr/mo
(*12*) 12–T–67, 73	0.003 lb/hr	8,760 hr/yr	744 hr/mo
(*13*) 20–T–121–122	0.85	312	34
(*14*) 20–T–123–125	5.4	616	68
(*15*) 20–T–140, 142	8.0	600	65
(*16*) 20–T–159	0.31	416	46
(*17*) 20–R–193, 200	9.8	540	59
(*18*) 32–R–300	0.18	365	41
(*19*) 32–T–302	0.21	365	41
(*20*) 32–T–304	0.21	730	81
(*21*) 32–T–314	0.23	365	41
(*22*) 32–T–322	0.21	365	41
(*23*) 32–T–328	0.23	365	41
(*24*) 10–T–61	0.001	365—containing organic	31—containing organic
(*25*) 24–T–441, 166	0.12	730	81
(*26*) 25–T–284, 440, 443–444.	0.28	730	81
(*27*) 25–T–170	4E–6	104	12

Source	Maximum VOC emissions, lb/batch	12-mo. rolling average limit batch/yr	Peak batch limit, batch/month
(*28*) Tank truck loading	0.12 lb/truck	1,600 trucks/yr	134 trucks/mo
(*29*) System 2	0.36	280	33
(*30*) System 4	2.88	280	33
(*31*) 25–R–164	0.10	365	41
(*32*) 25–R–205	0.14	365	41
(*33*) Drum station	3.51	1,005	110
(*34*) V–4SAC	1.56	254	29
(*35*) 20–CT–155	13.90	254	29
(*36*) 12–SE–100	1.10 lb/hr	8,760 hr/yr	744 hr/mo
(*37*) Drum exhaust hood A	1.00	365—involving use of organic material	31—involving use of organic material
(*38*) 24–T–230	0.98	730	81
(*39*) 8–CT–1	0.002 lb/hr	8,760 hr/yr	744 hr/mo
(*40*) 9–CT–1	0.002 lb/hr	8,760 hr/yr	744 hr/mo
(*41*) 10–CT–1	0.005 lb/hr	8,760 hr/yr	744 hr/mo
(*42*) 22–CT–1	0.003 lb/hr	8,760 hr/yr	744 hr/mo
(*43*) 25–CT–1	0.005 lb/hr	8,760 hr/yr	744 hr/mo
(*44*) 25–CT–2	0.002 lb/hr	8,760 hr/yr	744 hr/mo
(*45*) 29–CT–1	0.002 lb/hr	8,760 hr/yr	744 hr/mo
(*46*) 32–CT–1	0.005 lb/hr	8,760 hr/yr	744 hr/mo
(*47*) 36–CT–1	0.002 lb/hr	8,760 hr/yr	744 hr/mo
(*48*) 32–T–325	0[a]	365	41
(*49*) 26–R–195	0.1[a]	365	41
(*50*) Continuous polymer-blending.	0.1 lb/hr[a]	2,000 hr/yr	
(*51*) Portafeed washer booth 1.	0.84 lb/hr[b]	4,160 hr/yr	744 hr/mo
(*52*) Portafeed washer booth 2.	0.84 lb/hr[b]	8,736 hr/yr	744 hr/mo
(*53*) 32–T–392	4.4E–7	104	12

[a] Assumed value.
[b] Based on monitoring data.

(B) The following equation shall be used to calculate maximum VOC emissions per batch for the process sources listed in paragraphs (x)(9)(i)(A)(*1*) (charge only and (*2*) through (*28*) and (*53*) of this section:

Where:

ER = VOC emission rate;

Q_o = Quantity of organic per batch or charge rate;

$$ER(lb/batch) = \frac{Q_O(gal/batch) \times M_V(lb/mole) \times P(mmHg)}{constant_1([gal][mmHg]/mole)}$$

M_v = Molecular weight of the volatile component;

P = Partial pressure of the volatile component for mixtures of liquid made up with more than one chemical; or vapor pressure for pure liquids made up of only one organic chemical; and

$Constant_1$ = (7.45 gal/ft^3)x(385 ft^3/mole)x(760 mmHg).

(C) The following equation shall be used to calculate the VOC emissions per batch from the process sources listed in paragraph (x)(9)(i)(A)(*1*) of this section (purge only) and (*29*) through (*32*) of this section:

$$ER(lb/batch) = \frac{PR(ft^3/batch) \times M_V(lb/mole) \times P(mmHg)}{constant_2([ft^3][mmHg]/mole)}$$

Where:

PR=Nitrogen purge rate; and

Constant$_2$ = (385 ft^3/mole)x(760 mmHg).

(D) The following equation shall be used to calculate the VOC emissions per batch from the drum station listed at paragraph (x)(9)(i)(A)(*33*) of this section:

ER(1b/batch) = (0.40 × [$ER_{28\text{-}T\text{-}217\text{-}218}$])+(0.60 × [$ER_{28\text{-}T\text{-}214\text{-}216}$])

(E) The following equation shall be used to calculate the VOC emissions per batch from the V–4SAC listed at paragraph (x)(9)(i)(A)(*34*) of this section:

$$ER(lb/batch) = \frac{FR_{1mmHg}(lb/batch) \times M_V(lb/mole) \times P_{V2}(mmHg)}{M_a(lb/mole) \times (760 - P_{V2})(mmHg)}$$

Where:

FR_{1mmHg} = Maximum air flow rate to maintain 1 mmHg;

M_a = Molecular weight of air; and

P_{v2} = Vapor pressure of organic at 65 °F and 760 mmHg.

(F) The following equation shall be used to calculate the VOC emissions per batch from 20–CT–155 listed at paragraph (x)(9)(i)(A)(*35*) of this section:

$$ER(lb/batch) = \left[ER_{tot}(lb/hr) - ER_{V-4SAC}(lb/hr)\right] \times hr/batch$$

Where:

ER_{tot} = Total system emission rate calculated using the following equation:

$$ER_{tot}(lb/hr) = \frac{FR_{1mmHg}(lb/hr) \times M_V(lb/mole) \times P_{V1}(mmHg)}{M_a(lb/mole) \times (350 - P_{V1})(mmHg)}$$

Where:

P_{v1} = Vapor pressure of organic at 200 °F and 350 mmHg.

(G) The following equation shall be used to calculate the VOC emissions per hour from 12–SE–100 listed at paragraph (x)(9)(i)(A)(*36*) of this section:

ER(lb/hr) = Evap (gm/cm^2 sec) × area (cm^2) × 3600 sec/hr

Where:

Evap = Evaporation rate from a surface 8.93 cm × 8.9 cm (lb/[cm^2] [sec]) calculated using the following equation:

Evap = 10^{-7} M_v0.71 × [0.034 (P_e − P_d)$^{1.25}$ + 156 (P_e − P_d)]

Where:

P_e = Partial pressure of the component from the spilled liquid;

P_d = Partial pressure of the component in the incident air stream, assumed to be 0 mmhg; and

Area = Surface area of the liquid.

(H) The following equation shall be used to calculate the VOC emissions per batch from the drum exhaust hood A listed at paragraph (x)(9)(i)(A)(*37*) of this section:

$$ER(lb/batch) = \frac{FR(ft^3/batch) \times M_V(lb/mole) \times P(mmHg)}{constant_2([ft^3][mmHg]/mole)}$$

Where:

FR = Air flow rate.

(I) The following equation shall be used to calculate the VOC emissions per batch from 24–T–230 listed at paragraph (x)(9)(i)(A)(*38*) of this section:

$$ER(lb/batch) = \frac{(V_H - V_A) \times M_V \times PP_{135°F} \times 0.5}{constant_3}$$

Where:

V_H = Head space volume at heated temperature 135 °F;

V_A = Head space volume at ambient temperature 68 °F;

PP_{135} °F = Partial pressure of volatile component at 135 °F.

$Constant_3$ = (434 ft^3/mole)(7.45 gal/ft^3)x(760 mmHg)

(J) The following equations shall be used to calculate the VOC emissions per batch from the process sources listed in paragraph (x)(9)(i) (*39*) through (*47*) of this section:

$$ER_A(lb/yr) = \frac{V_R(gal) \times M_V(lb/mole) \times P(mmHg) \times org}{t(yr) \times constant_1\ ([gal]\ [mmHg]/mole)}$$

$$ER_B(lb/yr) = C_B \times V_T(gal) \times d_B(lb/gal) \times (charges/yr) \times org$$

$$ER_C(lb/yr) = C_C \times Evap(gal/min) \times d_C(lb/gal) \times (min/yr) \times org$$

Where:

V_R = Refill volume;

t = Time between refills;

org = Fraction of organic component in product;

C_B = Concentration of chemical B fed 3 times/week;

V_T = Tower volume;

d_B = Density of chemical B;

C_C = Concentration of chemical C fed continuously;

Evap = Evaporation rate; and

d_c = Density of chemical C.

(K) The number of batches for each process source shall be calculated as follows:

(*1*) Compute the monthly number of batches for each process source by the 15th day of the following month.

(*2*) By the 15th day of each month, add the monthly number of batches for each process source for the 12 previous months to obtain the total number of batches per year.

(ii) *Recordingkeeping.* (A) On and after October 1, 1992, the owner and operator of the Nalco Chemical Company facility in Bedford Park, Illinois, shall keep the following records for all process sources listed in paragraphs (x)(9)(i)(A) (*1*) through (*53*) of this section. These records shall be maintained for the units specified in paragraphs (x)(9)(i)(A) through (K) of this section, be compiled on a monthly basis, be retained at the facility for a period of 3 years, and be made available to the Administrator upon request.

(B) [Reserved]

(*1*) Calculations of the pounds per batch or pounds per hour (as appropriate) for each batch for each process source. This includes the information necessary for each calculation.

(*2*) The monthly number of batches for each process source.

(*3*) The total number of batches per year for the 12 previous months for each process source.

(10) The control requirements in this paragraph apply to the storage tanks listed in paragraph (x)(10)(i)(A) of this section at the Nalco Chemical Company facility in Bedford Park, Illinois,

instead of the control requirements in paragraph (x)(3) of this section.

(i) *Production and Operation Restrictions.* (A) On and after October 1, 1992, the product of the molecular weight of vapor in each storage tank (M_v), the true vapor pressure at bulk liquid conditions for each tank (P), and the paint factor (F_p); the storage tank maximum yearly throughput for each tank; and the maximum monthly throughput for each tank shall not exceed the following limits:

Tank No.	$M_V \times P \times F_P$, (lb) (mmhg)/lb-mole	Yearly throughput, gal/yr	Monthly throughput, gal/month
(*1*) 24–T–147	45.4	56,250	4,688
(*2*) 24–T–150	227	266,450	22,204
(*3*) 24–T–151	227	266,450	22,204
(*4*) 24–T–158N	18.9	173,830	14,486
(*5*) 24–T–158C	18.0	110,190	9,183
(*6*) 24–T–158S	1.17	52,010	4,334
(*7*) 24–T–160	226.8	266,450	22,204
(*8*) 24–T–161	227	182,450	15,204
(*9*) 24–T–162	473	93,900	7,825
(*10*) 20–T–101	3.72	90,290	7,525
(*11*) 20–T–102	1.80	122,900	10,242
(*12*) 20–T–103	420	23,960	1,997
(*13*) 20–T–104	180	475,900	39,659
(*14*) 20–T–105	370	52,360	4,363
(*15*) 20–T–106	1,210	623,100	51,926
(*16*) 20–T–107	294	90,040	7,503
(*17*) 20–T–108	1,360	81,470	6,789
(*18*) 20–T–109	1,390	167,060	13,922
(*19*) 20–T–153	180	35,000	2,917
(*20*) 20–T–131 [a]	.....	.....	.....
(*21*) 20–T–132 [a]	.....	.....	.....
(*22*) 20–T–133 [a]	.....	.....	.....
(*23*) 20–T–134 [a]	.....	.....	.....
(*24*) 20–T–135 [a]	.....	.....	.....
(*25*) 20–T–136	29.5	307,710	26,580
(*26*) 20–T–137 [a]	.....	.....	.....
(*27*) 20–T–138	29.5	307,710	26,580
(*28*) 32–T–305	288	785,550	65,462
(*29*) 32–T–306	66.5	165,350	13,779
(*30*) 32–T–307	66.5	294,750	24,563
(*31*) 32–T–308	66.5	128,470	10,706
(*32*) 32–T–310	66.5	77,290	6,441
(*33*) 32–T–311	66.5	182,130	15,177
(*34*) 32–T–319	50.0	688,950	57,413
(*35*) 32–T–320	50.0	688,950	57,413
(*36*) 32–T–326	70.0	248,440	20,703
(*37*) 32–T–331	70.0	489,540	40,795
(*38*) 32–T–332	70.0	70,380	5,865
(*39*) 32–T–333	70.0	270,850	22,571
(*40*) 32–T–334	70.0	210,610	18,267
(*41*) 32–T–335	70.0	418,200	34,850
(*42*) 32–T–336	70.0	632,460	52,706
(*43*) 32–T–337	798	53,850	4,488
(*44*) 17–T–206	27,000	300,760	25,063
(*45*) 17–T–208	27,000	300,760	25,063
(*46*) 17–T–207	2.48	180,180	15,016
(*47*) 17–T–209	2.48	180,180	15,016
(*48*) 24–T–515	331	216,860	18,072
(*49*) 25–T–282	1.42	1,920,410	160,034
(*50*) 25–T–283	1.42	1,920,410	160,034
(*51*) 24–T–442	18.0	90,990	7,583
(*52*) 17–T–210	47.9	582,990	48,583
(*53*) 17–T–211	47.9	582,990	48,583
(*54*) 17–T–212	508	728,420	60,702
(*55*) 17–T–213	508	728,420	60,702
(*56*) 17–T–401	50.0	131,970	10,998
(*57*) 17–T–402	15.0	120,160	10,014
(*58*) 17–T–403	6.20	127,770	10,648
(*59*) 17–T–404	26.5	1,601,510	133,460
(*60*) 17–T–405	50.0	113,830	9,486
(*61*) 17–T–406	40.0	231,030	19,253
(*62*) 17–T–407	206	135,180	11,265
(*63*) 17–T–409	395	327,410	27,285

Tank No.	$M_V \times P \times F_P$, (lb) (mmhg)/lb-mole	Yearly throughput, gal/yr	Monthly throughput, gal/month
(*64*) 17–T–410	395	129,290	10,774
(*65*) 17–T–411	50.0	213,870	17,843
(*66*) 17–T–412	50.0	277,840	23,153
(*67*) 17–T–414	50.0	72,920	6,077
(*68*) 17–T–415	50.0	56,140	4,678
(*69*) 17–T–416	395	393,550	32,796
(*70*) 17–T–417	23.4	233,780	19,482
(*71*) 17–T–418	115	873,270	72,773
(*72*) 17–T–419	119	278,460	23,205
(*73*) 17–T–420	112	730,780	60,898
(*74*) 17–T–421	25.2	300,010	25,001
(*75*) 17–T–422	115	873,270	72,773
(*76*) 17–T–423	23.4	215,060	17,922
(*77*) 17–T–424	23.4	209,610	17,468
(*78*) 26–T–218	50.0	64,890	5,408
(*79*) 26–T–219	1.50	197,900	16,492
(*80*) 26–T–220	2,460	160,020	13,336
(*81*) 26–T–221	50.0	74,820	6,235
(*82*) 26–T–222	80.0	66,590	5,550
(*83*) 26–T–224	4.80	225,290	18,774
(*84*) 26–T–225	50.0	36,610	3,051
(*85*) 26–T–226	294	47,390	3,949
(*86*) 26–T–227	50.0	63,040	5,253
(*87*) 26–T–228	500	136,150	11,346
(*88*) 26–T–229	50.0	112,970	9,414
(*89*) 26–T–231	23.4	319,610	26,634
(*90*) 26–T–232	117	564,280	47,024
(*91*) 26–T–233	23.4	539,700	44,975
(*92*) 27–T–245	21.6	361,970	30,165
(*93*) 27–T–246	348	141,820	11,818
(*94*) 27–T–247	23.4	71,670	5,972
(*95*) 27–T–248	198	96,010	8,001
(*96*) 27–T–249	927	51,240	4,270
(*97*) 27–T–250	110	433,030	36,086
(*98*) 27–T–251	396	45,440	3,787
(*99*) 27–T–252	21.6	171,370	14,281
(*100*) 27–T–253	348	237,900	19,825
(*101*) 26–T–192	10.0	117,950	9,829
(*102*) 27–T–278	0.62	74,910	6,243
(*103*) 27–T–279	0.18	583,760	48,647
(*104*) 27–T–285	21.6	459,530	38,294
(*105*) 27–T–286	21.6	459,530	38,294
(*106*) 25–T–201	19.8	143,550	11,963
(*107*) 32–T–388	0.07	499,340	41,612
(*108*) 32–T–389	0.07	499,340	41,612
(*109*) 32–T–390	288	808,310	583,340
(*110*) 32–T–391	1.42	800,00	583,340

[a] Tank not in use.

(B) The throughput shall be calculated as follows:

(*1*) Compute the monthly throughput for each tank by the 15th day of the following month.

(*2*) By the 15th day of each month, add the monthly throughputs for the 12 previous months to obtain the yearly throughput.

(ii) *Recordkeeping.* (A) On and after October 1, 1992, the owner and operator of the Nalco Chemical Company facility in Bedford Park, Illinois, shall keep the following records for all storage tanks. These records shall be compiled on a monthly basis, be retained at the facility for a period of 3 years, and be made available to the Administrator upon request.

(*1*) The molecular weight of vapor in each storage tank (M_v), the true vapor pressure at bulk liquid conditions for each tank (P), the paint factor (F_P), and their product. F_P shall be determined from Table 4.3–1 of "Compilation of Air Pollutant Emission Factors, Volume I: Stationary Point and Area Sources," AP–42, September 1985.

(*2*) The monthly throughput.

(*3*) The total throughput per year for the 12 previous months.

(B) [Reserved]

(iii) *Test Methods.* (A) The true vapor pressure at bulk liquid temperature shall be determined by using the procedures specified in paragraph (a)(8) of this section.

(B) The molecular weight of vapor in the storage tank shall be determined by using Table 4.3–2 "Compilation of Air Pollutant Emission Factors, Volume I: Stationary Point and Area Sources," AP–42, September 1985, or by analysis of vapor samples. Where mixtures of organic liquids are stored in a tank, M_v shall be estimated from the liquid composition using the following equation:

$$M_v = M_a \frac{P_a X_a}{P_t} + M_b \frac{P_b X_b}{P_t}$$

Where:

M_a=Molecular weight of pure component a;
P_a=Vapor pressure of pure component a;
X_a=Mole fraction of pure component a in the liquid;
M_b=Molecular weight of pure component b;
P_b=Vapor pressure of pure component b;
X_b=Mole fraction of pure component b in the liquid; and
$P_t = P_a X_{2=} P_b X_b$.

(11) The control requirements in this paragraph apply to the fugitive emission sources listed in paragraph (x)(11)(i)(A) of this section at the Nalco Chemical Company facility in Bedfore Park, Illinois, instead of the control requirements in paragraph (x)(3) of this section.

(i) *Production and Operation Restrictions.*

(A) On and after October 1, 1992, all components (e.g., pumps, valves, flanges, pressure relief valves (PRV's), and open end lines) at the specified locations (e.g., Building 32—Tube Reactor System, etc.), and in the specified type of service (e.g., heavy liquid stratified, light liquid stratified, etc.) shall be limited by the maximum monthly hours in the following table:

(ii) *Recordkeeping.*

(A) On and after October 1, 1992, the owner and operator of the Nalco Chemical Company facility in Bedford Park, Illinois, shall keep the following records for all fugitive emission sources. These records shall be compiled on a monthly basis, be retained at the facility for a period of 3 years, and be made available to the Administrator upon request.

(*1*) The total number of hours of organic service for each component at each location specified in paragraphs (x)(11)(i)(A) (*1*) through (*10*) of this section.

(*2*) The vapor pressure of each organic compound in each component at each location specified in paragraphs (x)(11)(i)(A) (*1*) through (*10*) of this section.

(B) [Reserved]

(12) The control and recordkeeping and reporting requirements, as well as the test methods in this paragraph, apply to the gravure and screen press operations at the Meyercord Corporation (Meyercord) in Carol Stream, Illinois, instead of the requirements in paragraphs (x)(1) through (x)(5) of this section.

(i) After July 1, 1991, no materials which contain volatile organic material (VOM), including coatings, inks, and cleaning material, may be used at any gravure or screen press unless the total VOM emissions remain below 100 tons of VOM for every consecutive 365-day period, or fraction thereof, starting on July 1, 1991. A new 365-day period starts on each day. The VOM emissions, which are to be calculated on a daily basis, are to be added to the VOM emissions for the prior 364 days (but not including any day prior to July 1, 1991). VOM emissions are based upon the VOM content of the material and the volume of material used. The effect of add-on control equipment is not considered in calculating VOM emissions; that is, the VOM emissions are to be determined as if the press(es) do(es) not have add-on control equipment. The applicable test methods and procedures specified in paragraph (a)(4) of this section are to be used in determining daily VOM emissions.

(ii) The VOM content of each coating, ink, and cleaning solution shall be determined by the applicable test methods and procedures specified in paragraph (a)(4) of this section to establish the records required under paragraph (x)(12)(ii) of this section. Beginning on July 1, 1991, the owner or operator of the subject presses shall collect and record all of the following information

each day and maintain the information at the facility for 3 years:

(A) The name and identification number of each coating, ink, and cleaning solution as applied on any press.

(B) The pounds (lbs) of VOM per gallon of each coating, ink, and cleaning solution (minus water and any compounds which are specifically exempted from the definition of VOM) as applied on any press.

(C) The total gallons of each coating, ink, and cleaning solution (minus water and any compounds which are specifically exempted from the definition of VOM) used per day.

(D) The total lbs of VOM contained in the volume of each coating, ink, and cleaning solution used per day on any press. The lbs of VOM per day is to be calculated by multiplying the lbs of VOM per gallon (minus water and any compounds which are specifically exempted from the definition of VOM) times the gallons (minus water and any compounds which are specifically exempted from the definition of VOM) used per day.

(E) The total lbs of VOM per day from all coatings, inks, and cleaning solutions used on all presses. The total lbs of VOM per day is to be obtained by adding the lbs of VOM per day contained in all coatings, inks, and cleaning solutions.

(F) Within 7 days after each 365-day period, the VOM emissions (as calculated in paragraph (x)(12)(ii)(E)) of this section before add-on control, from the 365-day period, are to be determined.

Starting on July 7, 1992, VOM emissions are to be determined for the 365 days ending 7 days earlier. Each day concludes a new 365-day period. However, no VOM emissions are to be included for any days prior to July 1, 1991. For example, on July 17, 1991, the emissions from July 1, through July 10, 1991, are to be included, whereas on January 7, 1994, the emissions from January 1, 1993, through December 31, 1993, are to be included.

(13) The control and recordkeeping and reporting requirements, as well as the test methods in this paragraph, apply to the sheet fed cold set presses and web heatset presses at the Wallace Computer Services, Inc. (Wallace) printing and binding plant in Hillside, Illinois, instead of the requirements in 40 CFR 52.741(h) and 40 CFR 52.741(x)(1) through 40 CFR 52.741(x)(5).

(i) After July 1, 1991, no inks shall at any time be applied, at the presses indicated below, which exceed the pounds (lbs) volatile organic material (VOM) per gallon of ink (minus water and any compounds which are specifically exempted from the definition of VOM) limit established for each press. After July 1, 1991, the yearly volume of ink used at each press, in gallons of ink (minus water and any compounds which are specifically exempted from the definition of VOM) per year, shall not exceed the gallons per year limit established below for each press. The yearly volume of ink used per press is to be calculated according to the procedure in paragraph (x)(13)(iii) of this section.

Press	Lbs VOM/ gallon ink	Gallons/ year ink
14	1.68	276
16	1.68	1896
22	3.01	2712
23	3.01	13140
25	3.01	12720
26	3.01	4764

(ii) After July 1, 1991, no materials (other than those inks subject to the limits in paragraph (x)(13)(i)) of this section, shall at any time be applied or used, at the presses indicated below, which exceed the lbs VOM per gallon of material (minus water and any compounds which are specifically exempted from the definition of VOM) limit established for each press. After July 1, 1991, the yearly volume of material (excluding ink and water) used at each press, in gallons of material (minus water and any compounds which are specifically exempted from the definition of VOM) per year, shall not exceed the gallons per year limit established for each press. The yearly volume of material (excluding ink and water) used per press is to be calculated according to the procedure in paragraph (x)(13)(iii) of this section.

Press	Lbs VOM/gallon material	Gallons/year material
14	6.9	612
16	6.9	8,340
22	7.1	360
23	7.1	480
25	7.1	516
26	7.1	1,848

(iii) The yearly volume of ink/material used is to be calculated as follows:

(A) Compute the volume of ink/material used each month per press by the 15th of the following month.

(B) By the 15th of each month, add the monthly ink/material usage per press for the 12 previous months (to obtain the yearly volume of ink used).

(iv) Beginning on July 1, 1991, the owner and operator of Wallace's plant in Hillside, Illinois, shall keep the following records for each press for each month. All records shall be retained by Wallace for 3 years and shall be made available to the Administrator on request:

(A) The name and identification number of each ink, fountain solution, fountain solution additive, cleaning solvent, and other VOM containing material as applied or used.

(B) The weight of VOM per volume of each ink, fountain solution, fountain solution additive, cleaning solvent, and each other VOM containing material (minus water and any compounds which are specifically exempted from the definition of VOM) as applied or used each month.

(C) The volume of ink (minus water and any compounds which are specifically exempted from the definition of VOM) as applied each month.

(D) The total volume of miscellaneous VOM containing materials (minus water and any compounds which are specifically exempted from the definition of VOM), other than inks, that are used each month.

(v) Any record showing a violation of paragraph (x)(13)(i) or (x)(13)(ii) of this section shall be reported by sending a copy of such record to the Administrator within 30 days of the violation.

(vi) To determine compliance with paragraphs (x)(13)(i) and (x)(13)(ii) of this section and to establish the records required under paragraph (x)(13)(iv) of this section the VOM content of each ink and miscellaneous VOM containing material shall be determined by the applicable test methods and procedures specified in paragraph (a)(4) of this section.

(14) The control and recordkeeping and reporting requirements, as well as the test methods in this paragraph, apply to the power-operated silk screen presses, the hand screen presses, the screen adhesive printing lines, the Andreotti rotogravure press, the Halley Rotogravure press, and the Viking press at the American Decal and Manufacturing Company's plant in Chicago, Illinois, instead of the requirements in paragraphs (h) and (x)(1) through (x)(5) of this section. The emissions from the sources listed above (in paragraph (x)(14) of this section) are to be included in the calculation of "maximum theoretical emissions" for determining applicability for any other sources (for which applicability is based on the quantity of maximum theoretical emissions) at American Decal and Manufacturing Company's Chicago plant not included in paragraph (x)(14) of this section.

(i) After July 24, 1992, no inks, coatings, thinner, clean-up material or other VOC-containing material shall at any time be applied, at the presses/printing lines listed above (in paragraph (x)(14) of this section), which exceed the VOC content (in percent by weight VOC) limit established below. After July 24, 1992, the yearly usage (in weight of material applied) of ink, coating, thinner, clean-up material, and other VOC-containing material, shall not exceed the applicable pounds per year limit established below. The yearly weight of ink, coating, thinner, clean-up material, and other VOC-containing material is to be calculated according to the procedure in paragraph (x)(14)(ii) of this section.

Material	Usage (lbs/yr)	Weight Percent VOC
#6 ink	9,076	56.8
#7 ink	1,278	54.2
#2 ink	2,911	72.7
Blue N.C. lacq.	394	64.3
Black M lacq.	753	61.6
4B9L Clear	2,451	77.1
4B9L H Clear	3,360	75.0
Flow-Out Agent	1,795	97.1
D.S. Stamp lacq.	1,047	62.0

Material	Usage (lbs/yr)	Weight Percent VOC
Dull write-on	86	71.6
AH–16	621	84.5
Thinner (#7,6)	2,350	100.0
Exon 470	1,668	65.4
9L Clear	2,451	77.1
White M lacq	3,467	47.0
Tedlar Gr. Vehicle	1,050	66.7
TH–98	22,047	73.2
TH–57	59	69.5
TH–14M	16,520	0.7
PS 160	10,644	3.0
#1 tint	4,872	69.3
#2 tint	4,256	83.7
Roto Color	13,884	62.0
1st SS White	25,740	51.5
2nd SS White	25,740	51.5
Clean Up	108,742	100.0
Other Materials	400	100.0

(ii) The yearly weight of material used is to be calculated as follows:

(A) Compute the weight of each ink, coating, thinner, clean-up material, and other VOC-containing material used each month by the 15th of the following month.

(B) By the 15th of each month, add the monthly usage (in pounds) for each ink, coating, thinner, clean-up material, and other VOC-containing material for the twelve previous months (to obtain the yearly weight of each ink, coating, thinner, clean-up material used). A comparison of these yearly usage levels (in pounds) with purchase records must be made to ensure the accuracy of the monthly usage levels (in pounds) obtained to satisfy paragraph (x)(14)(ii)(A) of this section.

(iii) Beginning on August 1, 1992, the owner and operator of the American Decal and Manufacturing Company plant in Chicago, Illinois, shall keep the following records for each ink, coating, thinner, clean-up material, and other VOC-containing material for each month. All records shall be kept by the American Decal and Manufacturing Company for 3 years and shall be made available to the Administrator on request:

(A) The name and identification number of each ink, coating, thinner, clean-up material, and other VOC-containing material as applied or used.

(B) The weight percent VOC of each ink, coating, thinner, clean-up material, and each other VOC-containing material as applied or used each month.

(C) The as applied weight of each ink, coating, thinner, clean-up material, and other VOC-containing material used each month.

(iv) Any record showing a violation of paragraph (x)(14)(i) of this section after October 20, 1995 shall be reported by sending a copy of such record to the Administrator within 30 days of the violation.

(v) To determine compliance with paragraph (x)(14)(i) of this section and to establish the records required under paragraph (x)(14)(iii) of this section, the weight percent VOC of each ink, coating, thinner, clean-up material, and other VOC-containing material shall be determined by the applicable test methods and procedures specified in paragraph (a)(4) of this section. Any material reported to be 100 percent VOC does not have to be tested for weight percent VOC.

(y) *Recordkeeping and reporting for non-CTG sources*—(1) *Exempt emission sources.* Upon request by the Administrator, the owner or operator of an emission source which is exempt from the requirements of paragraphs (u), (v), (w), (x), or (e)(3)(ii) of this section shall submit records to the Administrator within 30 calendar days from the date of the request that document that the emission source is exempt from those requirements.

(2) *Subject emission sources.* (i) Any owner or operator of a VOM emission source which is subject to the requirements of paragraph (u), (v), (w) or (x) of this section and complying by the use of emission capture and control equipment shall comply with the following:

(A) By July 1, 1991, or upon initial start-up of a new emission source, the owner or operator of the subject VOM emission source shall perform all tests and submit to the Administrator the results of all tests and calculations necessary to demonstrate that the subject emission source will be in compliance on and after July 1, 1991, or on and after the initial start-up date.

(B) On and after July 1, 1991, or on and after the initial start-up date, the owner or operator of a subject VOM emission source shall collect and record all of the following information each day and maintain the information

at the facility for a period of three years:

(*1*) Control device monitoring data.

(*2*) A log of operating time for the capture system, control device, monitoring equipment and the associated emission source.

(*3*) A maintenance log for the capture system, control device and monitoring equipment detailing all routine and non-routine maintenance performed including dates and duration of any outages.

(C) On and after July 1, 1991, the owner or operator of a subject VOM emission source shall notify the Administrator in the following instances:

(*1*) Any record showing a violation of the requirements of paragraphs (u), (v), (w), or (x) of this section shall be reported by sending a copy of such record to the Administrator within 30 days following the occurrence of the violation.

(*2*) At least 30 calendar days before changing the method of compliance with paragraphs (u) or (x) of this section from the use of capture systems and control devices to the use of complying coatings, the owner or operator shall comply with all requirements of paragraph (y)(2)(ii)(A) of this section. Upon changing the method of compliance with paragraphs (u) or (x) of this section from the use of capture systems and control devices to the use of complying coatings, the owner or operator shall comply with all requirements of paragraph (y)(2)(ii) of this section.

(ii) Any owner or operator of a coating line which is subject to the requirements of paragraphs (u) or (x) of this section and complying by means of the daily-weighted average VOM content limitation shall comply with the following:

(A) By July 1, 1991, or upon initial start-up of a coating line subject to paragraph (u) or (x) of this section; the owner or operator of the subject coating line shall certify to the Administrator that the coating line will be in compliance on and after July 1, 1991, or on and after the initial start-up date. Such certification shall include:

(*1*) The name and identification number of each coating line which will comply by means of the daily-weighted average VOM content limitation.

(*2*) The name and identification number of each coating as applied on each coating line.

(*3*) The weight of VOM per volume and the volume of each coating (minus water and any compounds which are specifically exempted from the definition of VOM) as applied each day on each coating line.

(*4*) The instrument or method by which the owner or operator will accurately measure or calculate the volume of each coating as applied each day on each coating line.

(*5*) The method by which the owner or operator will create and maintain records each day as required in paragraph (y)(2)(ii)(B) of this section.

(*6*) An example of the format in which the records required in paragraph (y)(2)(ii)(B) of this section will be kept.

(B) On and after July 1, 1991, or on and after the initial start-up date, the owner or operator of a subject coating line shall collect and record all of the following information each day for each coating line and maintain the information at the facility for a period of three years:

(*1*) The name and identification number of each coating as applied on each coating line.

(*2*) The weight of VOM per volume and the volume of each coating (minus water and any compounds which are specifically exempted from the definition of VOM) as applied each day on each coating line.

(*3*) The daily-weighted average VOM content of all coatings as applied on each coating line as defined in paragraph (a)(3) of this section.

(C) On and after July 1, 1991, the owner or operator of a subject coating line shall notify the Administrator in the following instances:

(*1*) Any record showing violation of the requirements of paragraph (u) or (x) of this section shall be reported by sending a copy of such record to the Administrator within 30 days following the occurrence of the violation.

(*2*) At least 30 calendar days before changing the method of compliance with paragraph (u) or (x) of this section from the use of complying coatings to

the use capture systems and control devices, the owner or operator shall comply with all requirements of paragraph (y)(2)(i)(A) of this section. Upon changing the method of compliance with paragraphs (u) or (x) of this section from the use of complying coatings to the use capture systems and control devices, the owner or operator shall comply with all requirements of paragraph (y)(2)(i) of this section.

(iii) Any owner or operator of a VOM emission source which is subject to the requirements of paragraphs (u), (v), (w) or (x) of this section and complying by means of an alternative control plan which has been approved by the Administrator as a SIP or FIP revision shall comply with the recordkeeping and reporting requirements specified in the altenative control plan.

(z) *Rules stayed.* Not withstanding any other provision of this subpart, the effectiveness of the following rules is stayed as indicated below.

(1) [Reserved]

(2) Compliance with all of 40 CFR 52.741 is stayed for 60 days (July 1, 1991, until August 30, 1991) as it pertains to the following parties: The Illinois Environmental Regulatory Group including its approximately 40 member firms; Allsteel, Incorporated; Riverside Laboratories, Incorporated; the Printing Industry of Illinois/Indiana Association including its member firms, and R.R. Donnelley & Sons Company; the rules applicable to General Motors Corporation; Reynolds Metals Company; Stepan Company; and Duo-Fast Corporation. Final compliance for these parties is extended 60 days from July 1, 1991 until August 30, 1991.

(3) The following rules are stayed from July 23, 1991, until USEPA completes its reconsideration as indicated:

(i) 40 CFR 52.741(e) only as it applies to Duo-Fast Corporation's Franklin Park, Illinois "power-driven metal fastener" manufacturing facility, and

(ii) 40 CFR 52.741 (w) and (y) only as it applies to Stepan Company's miscellaneous organic chemical manufacturing processes at its manufacturing facility located near Millsdale, Illinois.

When USEPA concludes its reconsideration, it will publish its decision and any actions required to effectuate that decision in the FEDERAL REGISTER.

(4)–(5) [Reserved]

APPENDIX A—LIST OF CHEMICALS DEFINING SYNTHETIC ORGANIC CHEMICAL AND POLYMER MANUFACTURING

OCPDB No.[1]	Chemical
20	Acetal.
30	Acetaldehyde.
40	Acetaldol.
50	Acetamide.
65	Acetanilide.
70	Acetic acid.
80	Acetic anhydride.
90	Acetone.
100	Acetone cyanohydrin.
110	Acetonitrile.
120	Acetophenone.
125	Acetyl chloride.
130	Acetylene.
140	Acrolein.
150	Acrylamide.
160	Acrylic acid & esters.
170	Acrylonitrile.
180	Adipic acid.
185	Adiponitrile.
190	Alkyl naphthalenes.
200	Allyl alcohol.
210	Allyl chloride.
220	Aminobenzoic acid.
230	Aminoethylethanolamine.
235	p-aminophenol.
240	Amyl acetates.
250	Amyl alcohols.
260	Amyl amine.
270	Amyl chloride.
280	Amyl mercaptans.
290	Amyl phenol.
300	Aniline.
310	Aniline hydrochloride.
320	Anisidine.
330	Anisole.
340	Anthranilic acid.
350	Anthraquinone.
360	Benzaldehyde.
370	Benzamide.
380	Benzene.
390	Benzenedisulfonic acid.
400	Benzene-sulfonic acid.
410	Benzil.
420	Benzilic acid.
430	Benzoic acid.
440	Benzoin.
450	Bennzonitrile.
460	Benzophenone.
480	Benzotrichloride.
490	Benzoyl chloride.
500	Benzyl chalcohol.
510	Benzyl amine.
520	Benzyl benzoate.
530	Benzyl chloride.
540	Benzyl dichloride.
550	Biphenyl.
560	Bisphenol A.
570	Bromobenzene.
580	Bromonaphthalene.
590	Butadiene.
592	1-butene.
600	n-butyl acetate.
630	n-butyl acrylate.
640	n-butyl alcohol.
650	s-butyl alcohol.
660	t-butyl alcohol.

OCPDB No.[1]	Chemical
670	n-butylamine.
680	s-butylamine.
690	t-butylamine.
700	p-pert-butyl benzoic acid.
750	n-butyraldehyde.
760	Butyric acid.
770	Butyric anhydride.
780	Butyronitrile.
785	Caprolactam.
790	Carbon disulfide.
800	Carbon tetrabromide.
810	Carbon tetrachloride.
820	Cellulose acetate.
840	Chloroacetic acid.
850	m-chloroaniline.
860	o-chloroaniline.
870	p-chloroaniline.
880	Chlorobenzaldehyde.
890	Chlorobenzene.
900	Chlorobenzoic acid.
905	Chlorobenzotrichloride.
910	Chlorobenzoyl chloride.
920	Chlorodifluoroethane.
921	Chlorodifluoromethane.
930	Chloroform
940	Chloronaphthalene.
950	o-chloronitrobenzene.
951	p-chloronitrobenzene.
960	Chlorophenols.
964	Chloroprene.
965	Chlorosulfonic acid.
970	m-chlorotoluene.
980	o-chlorotoluene.
990	p-chlorotoluene.
992	Chlorotrifluoromethane.
1000	m-cresol.
1010	o-cresol.
1020	p-cresol.
1021	Mixed cresols.
1030	Cresylic acid.
1040	Crontonaldehyde.
1050	Crontonic acid.
1060	Cumene.
1070	Cumene hydroperoxide.
1080	Cyanoacetic acid.
1090	Cyanogen chloride.
1100	Cyanuric acid.
1110	Cyanuric chloride.
1120	Cychohexane.
1130	Cyclohexanol.
1140	Cyclohexanone.
1150	Cyclohexene.
1160	Cyclohexylamine.
1170	Cyclooctadiene.
1180	Decanol.
1190	Diacetone alcohol.
1200	Diaminobenzoic acid.
1210	Dichloroaniline.
1215	m-dichlorobenzene.
1216	o-dichlorobenzene.
1220	p-dichlorobenzene.
1221	Dichlorodifluoromethane.
1240	Dichloroethyl ether 1,2-dichloroethane.
1250	Dichlorohydrin
1270	Dichloropropene.
1280	Dicyclohexylamine.
1290	Diethylamine.
1300	Diethylene glycol.
1304	Diethylene glycol diethyl ether.
1305	Diethylene glycol dimethyl ether.
1310	Diethylene glycolmonobutyl ether.
1320	Diethylene glycolmonobutyl ether acetate.
1330	Diethylene glycolmonoethyl ether.
1340	Diethylene glycolmonoethyl ether acetate.
1360	Diethylene glycolmonomethyl ether.
1420	Diethyl sulfate.
1430	Difluoroethane.
1440	Diisobutylene.
1442	Diisodecyl phthalate.
1444	Diisooctyl phthalate.
1450	Diketene.
1460	Dimethylamine.
1470	N,N-dimethylaniline.
1480	N,N-dimethylether.
1490	N,N-dimethylformamide.
1495	Dimethylhydrazine.
1500	Dimethyl sulfate.
1510	Dimethyl sulfide.
1520	Dimethylsulfoxide.
1530	Dimethylterephthalate.
1540	3,5-dinitrobenzoic acid.
1545	Dinitrophenol.
1560	Dioxane.
1570	Dioxolane.
1580	Diphenylamine.
1590	Diphenyl oxide.
1600	Diphenyl thiourea.
1610	Dipropylene glycol.
1620	Dodecene.
1630	Dodecylaniline.
1640	Dodecylphenol.
1650	Epichlorohydrin.
1660	Ethanol.
1661	Ethanolamines.
1670	Ethyl acetate.
1680	Ethyl acetoacetate.
1690	Ethyl acrylate.
1700	Ethylamine.
1710	Ethylbenzene.
1720	Ethyl bromide.
1730	Ethylcellulose.
1740	Ethyl chloride.
1750	Ethyl chloroacetate.
1760	Ethylcyanoacetate.
1770	Ethylene.
1780	Ethylene carbonate.
1790	Ethylene chlorodhydrin.
1800	Ethylenediamine.
1810	Ethylene dibromide.
1830	Ethylene glycol.
1840	Ethylene glycol diacetate.
1870	Ethylene glycol dimethyl ether.
1890	Ethylene glycol monobutyl ether.
1900	Ethylene glycol monobutyl ether acetate.
1910	Ethylene glycol monoethyl ether.
1920	Ethylene glycol monoethyl ether acetate.
1930	Ethylene glycol monoethyl ether.
1940	Ethylene glycol monomethyl ether acetate.
1960	Ethylene glycol monophenyl ether.
1970	Ethylene glycol monopropyl ether.
1980	Ethylene oxide.
1990	Ethyl ether.
2000	2-ethylhexanol.
2010	Ethyl orthoformate.
2020	Ethyl oxalate.
2030	Ethyl sodium oxalacetate.
2040	Formaldehyde.
2050	Formamide.
2060	Formic acid.
2070	Fumaric acid.
2073	Furfural.
2090	Glycerol (Synthetic).
2091	Glycerol dichlorohydrin.
2100	Glycerol triether.
2110	Glycine.
2120	Glyoxal.

OCPDB No.[1]	Chemical
2145	Hexachlorobenzene.
2150	Hexachloroethane.
2160	Hexadecyl alcohol.
2165	Hexamethylenediamine.
2170	Hexamethylene glycol.
2180	Hexamethylentetramine.
2190	Hydrogen cyanide.
2200	Hydroquinone.
2210	p-hydroxy-benzoic acid.
2240	Isoamylene.
2250	Isobutanol.
2260	Isobutyl acetate.
2261	Isobutylene.
2270	Isobutyraldehyde.
2280	Isobutyric acid.
2300	Isodecanol.
2320	Isooctyl alcohol.
2321	Isopentane.
2330	Isophorone.
2340	Isophthalic acid.
2350	Isoprene.
2360	Isopropanol.
2370	Isopropyl acetate.
2380	Isopropylamine.
2390	Isopropyl chloride.
2400	Isopropylphenol.
2410	Ketene.
2414	Linear alkylsulfonate.
2417	Linear alkylbenzene.
2420	Maleic acid.
2430	Maleic anhydride.
2440	Malic acid.
2450	Mesityl oxide.
2455	Metanilic acid.
2460	Methacrylic acid.
2490	Methallyl chloride.
2500	Methanol.
2510	Methyl acetate.
2520	Methyl acetoacetate.
2530	Methylamine.
2540	n-methylaniline.
2545	Methyl bromide.
2550	Methyl butynol.
2560	Methyl chloride.
2570	Methyl cyclohexane.
2590	Methyl cyclohexanone.
2620	Methylene chloride.
2630	Methylene dianiline.
2635	Methylene diphenyl diisocyanate.
2640	Methyl ethyl ketone.
2644	Methyl formate.
2650	Methyl isobutyl carbinol.
2660	Methyl isobutyl ketone.
2665	Methyl methacrylate.
2670	Methyl pentynol.
2690	a-methyl styrene.
2700	Morpholine.
2710	a-napthalene sulfonic acid.
2720	B-napthalene sulfonic acid.
2730	a-naphthol.
2740	B-naphthol.
2750	Neopentanoic acid.
2756	o-nitroaniline.
2757	p-nitroaniline.
2760	o-nitroanisole.
2762	p-nitroanisole.
2770	Nitrobenzene.
2780	Nitrobenzoic acid (o, m & p).
2790	Nitroethane.
2791	Nitromethane.
2792	Nitrophenol.
2795	Nitropropane.
2800	Nitrotoluene.

OCPDB No.[1]	Chemical
2810	Nonene.
2820	Nonyl phenol.
2830	Octyl phenol.
2840	Paraldehyde.
2850	Pentaerythritol.
2851	n-pentane.
2855	l-pentene.
2860	Perchloroethylene.
2882	Perchloromethylmercaptan.
2890	o-phenetidine.
2900	p-phenetidine.
2910	Phenol.
2920	Phenolsulfonic acids.
2930	Phenyl anthranilic acid.
2940	Phenylenediamine.
2960	Phthalic anhydride.
2970	Phthalimide.
2973	b-picoline.
2976	Piperazine.
3000	Polybutenes.
3010	Polyethylene glycol.
3025	Polypropylene glycol.
3063	Propionaldehyde.
3066	Propionic acid.
3070	n-propyl alcohol.
3075	Propylamine.
3080	Propyl chloride.
3090	Propylene.
3100	Propylene chlorohydrin.
3110	Propylene dichloride.
3111	Propylene glycol.
3120	Propylene oxide.
3130	Pyridine.
3140	Quinone.
3150	Resorcinol.
3160	Resorcylic acid.
3170	Salicylic acid.
3180	Sodium acetate.
3181	Sodium benzoate.
3190	Sodium carboxymethylcellulose.
3191	Sodium chloroacetate.
3200	Sodium formate.
3210	Sodium phenate.
3220	Sorbic acid.
3230	Styrene.
3240	Succinic acid.
3250	Succinitrile.
3251	Sulfanilic acid.
3260	Sulfolane.
3270	Tannic acid.
3280	Terephthalic acid.
3290 & 3291.	Tetrachloroethanes.
3300	Tetrachlorophthalic anhydride.
3310	Tetraethyllead.
3320	Tetrahydronaphthalene.
3330	Tetrahydrophthalic anhydride.
3335	Tetramethyllead.
3340	Tetramethylenediamine.
3341	Tetramethylethylenediamine.
3349	Toluene.
3350	Toluene-2,4-diamine.
3354	Toluene-2,4-diisocyanate.
3355	Toluene diisocyanates (mixture).
3360	Toluene sulfonamide.
3370	Toluene sulfonic acids.
3380	Toluene sulfonylchloride.
3381	Toluidines.
3393	Trichlorobenzenes.
3395	1,1,1-trichloroethane.
3400	1,1,2-trichloroethane.
3410	Trichloroethylene.
3411	Trichlorofluoromethane.

OCPDB No.[1]	Chemical
3420	1,2,3-trichloropropane.
3430	1,1,2-trichloro-1,2,2-trifluoroethane.
3450	Triethylamine.
3460	Triethylene glycol.
3470	Triethylene glycoldimethyl ether.
3480	Triisobutylene.
3490	Trimethylamine.
3510	Vinyl acetate.
3520	Vinyl chloride.
3530	Vinylidene chloride.
3540	Vinyl toluene.
3541	Xylene (mixed).
3560	o-xylene.
3570	p-xylene.
3580	Xylenol.
3590	Xylidine, 1,3-butylene glycol, Dinitrotoluene, Methyltertbutyl ether, Phosgene, Polyethylene, Polypropylene, Polystyrene, Urea.

[1] The OCPDB Numbers are reference indices assigned to the various chemicals in the Organic Chemical Producers Data Base developed by the USEPA.

APPENDIX B—VOM MEASUREMENT TECHNIQUES FOR CAPTURE EFFICIENCY

Procedure G.1—Captured VOC Emissions

1. Introduction

1.1 *Applicability.* This procedure is applicable for determining the volatile organic compounds (VOC) content of captured gas streams. It is intended to be used as a segment in the development of liquid/gas or gas/gas protocols for determining VOC capture efficiency (CE) for surface coating and printing operations. The procedure may not be acceptable in certain site-specific situations, *e.g.,* when: (1) Direct fired heaters or other circumstances affect the quantity of VOC at the control device inlet; and (2) particulate organic aerosols are formed in the process and are present in the captured emissions.

1.2 *Principle.* The amount of VOC captured (G) is calculated as the sum of the products of the VOC content (C_{Gj}), the flow rate (Q_{Gj}), and the sample time (T_C) from each captured emissions point.

1.3 *Estimated measurement uncertainty.* The measurement uncertainties are estimated for each captured or fugitive emissions point as follows: Q_{Gj}=±5.5 percent and C_{Gj}=±5.0 percent. Based on these numbers, the probable uncertainty for G is estimated at about ±7.4 percent.

1.4 *Sampling requirements.* A capture efficiency test shall consist of at least three sampling runs. The sampling time for each run should be at least 8 hours, unless otherwise approved.

1.5 *Notes.* Because this procedure is often applied in highly explosive areas, caution and care should be exercised in choosing appropriate equipment and installing and using the equipment. Mention of trade names or company products does not constitute endorsement. All gas concentrations (percent, ppm) are by volume, unless otherwise noted.

2. APPARATUS AND REAGENTS

2.1 *Gas VOC concentration.* A schematic of the measurement system is shown in Figure 1. The main components are described below:

2.1.1 *Sample probe.* Stainless steel, or equivalent. The probe shall be heated to prevent VOC condensation.

2.1.2 *Calibration valve assembly.* Three-way valve assembly at the outlet of sample probe to direct the zero and calibration gases to the analyzer. Other methods, such as quick-connect lines, to route calibration gases to the outlet of the sample probe are acceptable.

2.1.3 *Sample line.* Stainless steel or Teflon tubing to transport the sample gas to the analyzer. The sample line must be heated to prevent condensation.

2.1.4 *Sample pump.* A lead-free pump, to pull the sample gas through the system at a flow rate sufficient to minimize the response time of the measurement system. The components of the pump that contact the gas stream shall be constructed of stainless steel or Teflon. The sample pump must be heated to prevent condensation.

2.1.5 *Sample flow rate control.* A sample flow rate control valve and rotameter, or equivalent, to maintain a constant sampling rate within 10 percent. The flow rate control valve and rotameter must be heated to prevent condensation. A control valve may also be located on the sample pump bypass loop to assist in controlling the sample pressure and flow rate.

2.1.6 *Sample gas manifold.* Capable of diverting a portion of the sample gas stream to the flame ionization analyzer (FIA), and the remainder to the bypass discharge vent. The manifold components shall be constructed of stainless steel or Teflon. If captured or fugitive emissions are to be measured at multiple locations, the measurement system shall be designed to use separate sampling probes, lines, and pumps for each measurement location and a common sample gas manifold and FIA. The sample gas manifold and connecting lines to the FIA must be heated to prevent condensation.

2.1.7 *Organic concentration analyzer.* An FIA with a span value of 1.5 times the expected concentration as propane; however, other span values may be used if it can be demonstrated that they would provide more accurate measurements.

The system shall be capable of meeting or exceeding the following specifications:

2.1.7.1 *Zero drift.* Less than ±3.0 percent of the span value.

2.1.7.2 *Calibration drift.* Less than ±3.0 percent of the span value.

2.1.7.3 *Calibration error.* Less than ±5.0 percent of the calibration gas value.

2.1.7.4 *Response time.* Less than 30 seconds.

2.1.8 *Integrator/data acquisition system.* An analog or digital device or computerized data acquisition system used to integrate the FIA response or compute the average response and record measurement data. The minimum data sampling frequency for computing average or integrated values is one measurement value every 5 seconds. The device shall be capable of recording average values at least once per minute.

2.1.9 *Calibration and other gases.* Gases used for calibration, fuel, and combustion air (if required) are contained in compressed gas cylinders. All calibration gases shall be traceable to NIST standards and shall be certified by the manufacturer to ±1 percent of the tag value. Additionally, the manufacturer of the cylinder should provide a recommended shelf life for each calibration gas cylinder over which the concentration does not change more than ±2 percent from the certified value. For calibration gas values not generally available, alternative methods for preparing calibration gas mixtures, such as dilution systems, may be used with prior approval.

2.1.9.1 *Fuel.* A 40 percent H_2/60 percent He or 40 percent H_2/60 percent N_2 gas mixture is recommended to avoid an oxygen synergism effect that reportedly occurs when oxygen concentration varies significantly from a mean value.

2.1.9.2 *Carrier gas.* High purity air with less than 1 ppm of organic material (as propane or carbon equivalent) or less than 0.1 percent of the span value, whichever is greater.

2.1.9.3 *FIA Linearity calibration gases.* Low-, mid-, and high-range gas mixture standards with nominal propane concentrations of 20–30, 45–55, and 70–80 percent of the span value in air, respectively. Other calibration values and other span values may be used if it can be shown that more accurate measurements would be achieved.

2.1.10 *Particulate filter.* An in-stack or an out-of-stack glass fiber filter is recommended if exhaust gas particulate loading is significant. An out-of-stack filter must be heated to prevent any condensation unless it can be demonstrated that no condensation occurs.

2.2 *Captured emissions volumetric flow rate.*

2.2.1 *Method 2 or 2A apparatus.* For determining volumetric flow rate.

2.2.2 *Method 3 apparatus and reagents.* For determining molecular weight of the gas stream. An estimate of the molecular weight of the gas stream may be used if it can be justified.

2.2.3 *Method 4 apparatus and reagents.* For determining moisture content, if necessary.

3. Determinations of Volumetric Flow Rate of Captured Emissions

3.1 Locate all points where emissions are captured from the affected facility. Using Method 1, determine the sampling points. Be sure to check each site for cyclonic or swirling flow.

3.2 Measure the velocity at each sampling site at least once every hour during each sampling run using Method 2 or 2A.

4. Determinations of VOC Content of Captured Emissions

4.1 *Analysis duration.* Measure the VOC responses at each captured emissions point during the entire test run or, if applicable, while the process is operating. If there are multiple captured emission locations, design a sampling system to allow a single FIA to be used to determine the VOC responses at all sampling locations.

4.2 *Gas VOC concentration.*

4.2.1 Assemble the sample train as shown in Figure 1. Calibrate the FIA according to the procedure in section 5.1.

4.2.2 Conduct a system check according to the procedure in section 5.3.

4.2.3 Install the sample probe so that the probe is centrally located in the stack, pipe, or duct, and is sealed tightly at the stack port connection.

4.2.4 Inject zero gas at the calibration valve assembly. Allow the measurement system response to reach zero. Measure the system response time as the time required for the system to reach the effluent concentration after the calibration valve has been returned to the effluent sampling position.

4.2.5 Conduct a system check before and a system check after each sampling run according to the procedures in sections 5.2 and 5.3. If the drift check following a run indicates unacceptable performance, the run is not valid. The tester may elect to perform system drift checks during the run not to exceed one drift check per hour.

4.2.6 Verify that the sample lines, filter, and pump temperatures are 120±5 °C.

4.2.7 Begin sampling at the start of the test period and continue to sample during the entire run. Record the starting and ending times and any required process information as appropriate. If multiple captured emission locations are sampled using a single FIA, sample at each location for the same amount of time (*e.g.*, 2 minutes) and continue to switch from one location to another for the entire test run. Be sure that total sampling time at each location is the same at the end of the test run. Collect at least 4 separate measurements from each sample point during each hour of testing. Disregard the measurements at each sampling location until two times the response time of the measurement system has elapsed. Continue sampling for at least 1 minute and record the concentration measurements.

4.3 *Background concentration.*

4.3.1 Locate all NDO's of the TTE. A sampling point shall be centrally located outside

of the TTE at 4 equivalent diameters from each NDO, if possible. If there are more than 6 NDO's, choose 6 sampling points evenly spaced among the NDO's.

4.3.2 Assemble the sample train as shown in Figure 2. Calibrate the FIA and conduct a system check according to the procedures in sections 5.1 and 5.3.

NOTE: This sample train shall be a separate sampling train from the one to measure the captured emissions.

4.3.3 Position the probe at the sampling location.

4.3.4 Determine the response time, conduct the system check and sample according to the procedures described in sections 4.2.4 to 4.2.7.

4.4 *Alternative procedure.* The direct interface sampling and analysis procedure described in section 7.2 of Method 18 may be used to determine the gas VOC concentration. The system must be designed to collect and analyze at least one sample every 10 minutes.

5. CALIBRATION AND QUALITY ASSURANCE

5.1 *FIA calibration and linearity check.* Make necessary adjustments to the air and fuel supplies for the FIA and ignite the burner. Allow the FIA to warm up for the period recommended by the manufacturer. Inject a calibration gas into the measurement system and adjust the back-pressure regulator to the value required to achieve the flow rates specified by the manufacturer. Inject the zero- and the high-range calibration gases and adjust the analyzer calibration to provide the proper responses. Inject the low- and mid-range gases and record the responses of the measurement system. The calibration and linearity of the system are acceptable if the responses for all four gases are within 5 percent of the respective gas values. If the performance of the system is not acceptable, repair or adjust the system and repeat the linearity check. Conduct a calibration and linearity check after assembling the analysis system and after a major change is made to the system.

5.2 *Systems drift checks.* Select the calibration gas that most closely approximates the concentration of the captured emissions for conducting the drift checks. Introduce the zero and calibration gas at the calibration valve assembly and verify that the appropriate gas flow rate and pressure are present at the FIA. Record the measurement system responses to the zero and calibration gases. The performance of the system is acceptable if the difference between the drift check measurement and the value obtained in section 5.1 is less than 3 percent of the span value. Conduct the system drift checks at the end of each run.

5.3 *System check.* Inject the high range calibration gas at the inlet to the sampling probe while the dilution air is turned off. Record the response. The performance of the system is acceptable if the measurement system response is within 5 percent of the value obtained in section 5.1 for the high range calibration gas. Conduct a system check before and after each test run.

5.4 *Analysis audit.* Immediately before each test analyze an audit cylinder as described in section 5.2. The analysis audit must agree with the audit cylinder concentration within 10 percent.

6. NOMENCLATURE

A_i=area of NDO i, ft^2.

A_N=total area of all NDO's in the enclosure, ft^2.

C_{Bi}=corrected average VOC concentration of background emissions at point i, ppm propane.

C_B=average background concentration, ppm propane.

C_{Gj}=corrected average VOC concentration of captured emissions at point j, ppm propane.

C_{DH}=average measured concentration for the drift check calibration gas, ppm propane.

C_{DO}=average system drift check concentration for zero concentration gas, ppm propane.

C_H=actual concentration of the drift check calibration gas, ppm propane.

C_i=uncorrected average background VOC concentration measured at point i, ppm propane.

C_j=uncorrected average VOC concentration measured at point j, ppm propane.

G=total VOC content of captured emissions, kg.

K_1=1.830×10^{-6} kg/ (m^3-ppm).

n=number of measurement points.

Q_{Gj}=average effluent volumetric flow rate corrected to standard conditions at captured emissions point j, m^3/min.

T_C=total duration of captured emissions sampling run, min.

7. CALCULATIONS

7.1 *Total VOC captured emissions.*

$$G = \sum_{j=1}^{n} \left(C_{Gj} - C_B\right) Q_{Gj} T_C K_1 \qquad \text{Eq. 1}$$

7.2 *VOC concentration of the captured emissions at point j.*

$$C_{Gj} = \left(C_j - C_{DO}\right) \frac{C_H}{C_{DH} - C_{DO}} \qquad \text{Eq. 2}$$

7.3. *Background VOC concentration at point i.*

$$C_{Bi} = \left(C_i - C_{DO}\right)\frac{C_H}{C_{DH} - C_{DO}} \qquad \text{Eq. 3}$$

7.4 *Average background concentration.*

$$C_B = \frac{\sum_{i=1}^{n} C_{Bi} A_i}{n A_N} \qquad \text{Eq. 4}$$

NOTE: If the concentration at each point is with in 20 percent of the average concentration of all points, the terms "A_i" and "A_N" may be deleted from Equation 4.

Procedure G.2—Captured VOC Emissions (Dilution Technique)

1. INTRODUCTION

1.1 *Applicability.* This procedure is applicable for determining the volatile organic compounds (VOC) content of captured gas streams. It is intended to be used as a segment in the development of a gas/gas protocol in which fugitive emissions are measured for determining VOC capture efficiency (CE) for surface coating and printing operations. A dilution system is used to reduce the VOC concentration of the captured emission to about the same concentration as the fugitive emission. The procedure may not be acceptable in certain site-specific situations, *e.g.*, when: (1) Direct fired heaters or other circumstances affect the quantity of VOC at the control device inlet; and (2) particulate organic aerosols are formed in the process and are present in the captured emissions.

1.2 *Principle.* The amount of VOC captured (G) is calculated as the sum of the products of the VOC content (C_{Gj}), the flow rate (Q_{Gj}), and the sampling time (T_C) from each captured emissions point.

1.3 *Estimated measurement uncertainty.* The measurement uncertainties are estimated for each captured or fugitive emissions point as follows: O_{Gj}=±5.5 percent and C_{Gj}=±5 percent. Based on these numbers, the probable uncertainty for G is estimated at about ±7.4 percent.

1.4 *Sampling requirements.* A capture efficiency test shall consist of at least three sampling runs. The sampling time for each run should be at least 8 hours, unless otherwise approved.

1.5 *Notes.* Because this procedure is often applied in highly explosive areas, caution and care should be exercised in choosing appropriate equipment and installing and using the equipment. Mention of trade names or company products does not constitute endorsement. All gas concentrations (percent, ppm) are by volume, unless otherwise noted.

2. APPARATUS AND REAGENTS

2.1 *Gas VOC concentration.* A schematic of the measurement system is shown in Figure 1. The main components are described below:

2.1.1 *Dilution system.* A Kipp in-stack dilution probe and controller or similar device may be used. The dilution rate may be changed by substituting different critical orifices or adjustments of the aspirator supply pressure. The dilution system shall be heated to prevent VOC condensation.

NOTE: An out-of-stack dilution device may be used.

2.1.2 *Calibration valve assembly.* Three-way valve assembly at the outlet of sample probe to direct the zero and calibration gases to the analyzer. Other methods, such as quick-connect lines, to route calibration gases to the outlet of the sample probe are acceptable.

2.1.3 *Sample line.* Stainless steel or Teflon tubing to transport the sample gas to the analyzer. The sample line must be heated to prevent condensation.

2.1.4 *Sample pump.* A leak-free pump, to pull the sample gas through the system at a flow rate sufficient to minimize the response time of the measurement system. The components of the pump that contract the gas stream shall be constructed of stainless steel or Teflon. The sample pump must be heated to prevent condensation.

2.1.5 *Sample flow rate control.* A sample flow rate control valve and rotameter, or equivalent, to maintain a constant sampling rate within 10 percent. The flow control valve and rotameter must be heated to prevent condensation. A control valve may also be located on the sample pump bypass loop to assist in controlling the sample pressure and flow rate.

2.1.6 *Sample gas manifold.* Capable of diverting a portion of the sample gas stream to the flame ionization analyzer (FIA), and the remainder to the bypass discharge vent. The manifold components shall be constructed of stainless steel or Teflon. If captured or fugitive emissions are to be measured at multiple locations, the measurement system shall be designed to use separate sampling probes, lines, and pumps for each measurement location and a common sample gas manifold and FIA. The sample gas manifold and connecting lines to the FIA must be heated to prevent condensation.

2.1.7 *Organic concentration analyzer.* An FIA with a span value of 1.5 times the expected concentration as propane; however, other span values may be used if it can be demonstrated that they would provide more accurate measurements.

The system shall be capable of meeting or exceeding the following specifications:

2.1.7.1 *Zero drift.* Less than ±3.0 percent of the span value.

2.1.7.2 *Calibration drift.* Less than ±3.0 percent of the span value.

2.1.7.3 *Calibration error.* Less than ±5.0 percent of the calibration gas value.

2.1.7.4 *Response time.* Less than 30 seconds.

2.1.7.8 *Integrator/data acquisition system.* An analog or digital device or computerized data acquisition system used to integrate the FIA response or compute the average response and record measurement data. The minimum data sampling frequency for computing average or integrated values is one measurement value every 5 seconds. The device shall be capable of recording average values at least once per minute.

2.1.9 *Calibration and other gases.* Gases used for calibration, fuel, and combustion air (if required) are contained in compressed gas cylinders. All calibration gases shall be traceable to NIST standards and shall be certified by the manufacturer to ±1 percent of the tag value. Additionally, the manufacturer of the cylinder should provide a recommended shelf life for each calibration gas cylinder over which the concentration does not change more than ±2 percent from the certified value. For calibration gas values not generally available, alternative methods for preparing calibration gas mixtures, such as dilution system, may be used with prior approval.

2.1.9.1 *Fuel.* A 40 percent H_2/60 percent He or 40 percent H_2/60 percent N_2 gas mixture is recommended to avoid an oxygen synergism effect that reportedly occurs when oxygen concentration varies signficantly from a mean value.

2.1.9.2. *Carrier gas and dilution air supply.* High purity air with less than 1 ppm of organic material (as propane or carbon equivalent) or less than 0.1 percent of the span value, whichever is greater.

2.1.9.3 *FIA linearity calibration gases.* Low-, mid-, and high-range gas mixture standards with nominal propane concentrations of 20–30, 45–55, and 70–80 percent of the span value in air, respectively. Other calibration values and other span values may be used if it can be shown that more accurate measurements would be achieved.

2.1.9.4 *Dilution check gas.* Gas mixture standard containing propane in air, approximately half the span value after dilution.

2.1.10 *Particulate filter.* An in-stack or an out-of-stack glass fiber filter is recommended if exhaust gas particulate loading is significant. An out-of-stack filter must be heated to prevent any condensation unless it can be demonstrated that no condensation occurs.

2.2 *Captured emissions volumetric flow rate.*

2.2.1 *Method 2 or 2A apparatus.* For determining volumetric flow rate.

2.2.2 *Method 3 apparatus and reagents.* For determining molecular weight of the gas stream. An estimate of the molecular weight of the gas stream may be used if it can be justified.

2.2.3 *Method 4 apparatus and reagents.* For determining moisture content, if necessary.

3. Determination of Volumetric Flow Rate of Captured Emissions

3.1 Locate all points where emissions are captured from the affected facility. Using Method 1, determine the sampling points. Be sure to check each site for cyclonic or swirling flow.

3.2 Measure the velocity at each sampling site at least once every hour during each sampling run using Method 2 or 2A.

4. Determination of VOC Content of Captured Emissions

4.1 *Analysis duration.* Measure the VOC responses at each captured emissions point during the entire test run or, if applicable, while the process is operating. If there are multiple captured emissions locations, design a sampling system to allow a single FIA to be used to determine the VOC responses at all sampling locations.

4.2 *Gas VOC concentration.*

4.2.1 Assemble the sample train as shown in Figure 1. Calibrate the FIA according to the procedure in section 5.1.

4.2.2 Set the dilution ratio and determine the dilution factor according to the procedure in section 5.3.

4.2.3 Conduct a system check according to the procedure in section 5.4.

4.2.4 Install the sample probe so that the probe is centrally located in the stack, pipe, or duct, and is sealed tightly at the stack port connection.

4.2.5 Inject zero gas at the calibration valve assembly. Measure the system response time as the time required for the system to reach the effluent concentration after the calibration valve has been returned to the effluent sampling position.

4.2.6 Conduct a system check before and a system drift check after each sampling run according to the procedures in sections 5.2 and 5.4. If the drift check following a run indicates unacceptable performance, the run is not valid. The tester may elect to perform system drift checks during the run not to exceed one drift check per hour.

4.2.7 Verify that the sample lines, filter, and pump temperatures are 120±5 °C.

4.2.8 Begin sampling at the start of the test period and continue to sample during the entire run. Record the starting and ending times and any required process information as appropriate. If multiple captured emission locations are sampled using a single FIA, sample at each location for the same amount of time (*e.g.*, 2 minutes) and continue to switch from one location to another for the entire test run. Be sure that total sampling time at each location is the

same at the end of the test run. Collect at least 4 separate measurements from each sample point during each hour of testing. Disregard the measurements at each sampling location until two times the response time of the measurement system has elapsed. Continue sampling for at least 1 minute and record the concentration measurements.

4.3 *Background concentration.*

4.3.1 Locate all NDO's of the TTE. A sampling point shall be centrally located outside of the TTE at 4 equivalent diameters from each NDO, if possible. If there are more than 6 NDO's, choose 6 sampling points evenly spaced among the NDO's.

4.3.2 Assemble the sample train as shown in Figure 2. Calibrate the FIA and conduct a system check according to the procedures in sections 5.1 and 5.4.

4.3.3 Position the probe at the sampling location.

4.3.4 Determine the response time, conduct the system check and sample according to the procedures described in sections 4.2.4 to 4.2.8.

4.4 *Alternative procedure.* The direct interface sampling and analysis procedure described in section 7.2 of Method 18 may be used to determine the gas VOC concentration. The system must be designed to collect and analyze at least one sample every 10 minutes.

5. Calibration and Quality Assurance

5.1 *FIA Calibration and linearity check.* Make necessary adjustments to the air and fuel supplies for the FIA and ignite the burner. Allow the FIA to warm up for the period recommended by the manufacturer. Inject a calibration gas into the measurement system after the dilution system and adjust the back-pressure regulator to the value required to achieve the flow rates specified by the manufacturer. Inject the zero- and the high-range calibration gases and adjust the analyzer calibration to provide the proper responses. Inject the low- and mid-range gases and record the responses of the measurement system. The calibration and linearity of the system are acceptable if the responses for all four gases are within 5 percent of the respective gas values. If the performance of the system is not acceptable, repair or adjust the system and repeat the linearity check. Conduct a calibration and linearity check after assembling the analysis system and after a major change is made to the system.

5.2 *Systems drift checks.* Select the calibration gas that most closely approximates the concentration of the diluted captured emissions for conducting the drift checks. Introduce the zero and calibration gas at the calibration valve assembly and verify that the appropriate gas flow rate and pressure are present at the FIA. Record the measurement system responses to the zero and calibration gases. The performance of the system is acceptable if the difference between the drift check measurement and the value obtained in section 5.1 is less than 3 percent of the span value. Conduct the system drift check at the end of each run.

5.3 *Determination of dilution factor.* Inject the dilution check gas into the measurement system before the dilution system and record the response. Calculate the dilution factor using Equation 3.

5.4 *System check.* Inject the high range calibration gas at the inlet to the sampling probe while the dilution air is turned off. Record the response. The performance of the system is acceptable if the measurement system response is within 5 percent of the value obtained in section 5.1 for the high range calibration gas. Conduct a system check before and after each test run.

5.5 *Analysis audit.* Immediately before each test analyze an audit cylinder as described in section 5.2. The analysis audit must agree with the audit cylinder concentration within 10 percent.

6. Nomenclature

A_i=area of NDO i, ft^2.

A_N=total area of all NDO's in the enclosure, ft^2.

C_A=actual concentration of the dilution check gas, ppm propane.

C_{Bi}=corrected average VOC concentration of background emissions at point i, ppm propane.

C_B=average background concentration, ppm propane.

C_{DH}=average measured concentration for the drift check calibration gas, ppm propane.

C_{DO}=average system drift check concentration for zero concentration gas, ppm propane.

C_H=actual concentration of the drift check calibration, gas, ppm propane.

C_i=uncorrected average background VOC concentration measured at point i, ppm propane.

C_j=uncorrected average VOC concentration measured at point j, ppm propane.

C_M=measured concentration of the dilution check gas, ppm propane.

D_F=dilution factor.

G=total VOC content of captured emissions, kg.

$K_1=1.830 \times 10^{-6}$ kg/(m^3-ppm).

n=number of measurement points.

Q_{Gj}=average effluent volumetric flow rate corrected to standard conditions at captured emissions point j, m^3/min.

T_C=total duration of capture efficiency sampling run, min.

7. Calculations

7.1 *Total VOC captured emissions.*

$$G = \sum_{j=1}^{n} C_{Gj} Q_{Gj} T_C K_1 \qquad \text{Eq. 1}$$

7.2 *VOC concentration of the captured emissions to point j.*

$$C_{Gj} = DF\left(C_j + -C_{DO}\right)\frac{C_H}{C_{DH} - C_{DO}} \qquad \text{Eq. 2}$$

7.3 *Dilution factor.*

$$DF = \frac{C_A}{C_M} \qquad \text{Eq. 3}$$

7.4 *Background VOC concentration at point i.*

$$C_{Bi} = \left(C_i - C_{DO}\right)\frac{C_H}{C_{DH} - C_{DO}} \qquad \text{Eq. 4}$$

7.5 *Average background concentration.*

$$C_B = \frac{\sum_{i=1}^{n} C_{Bi} A_i}{nA_N} \qquad \text{Eq. 5}$$

NOTE: If the concentration at each point is within 20 percent of the average concentration of all points, the terms "A_i" and "A_N" may be deleted from Equation 4.

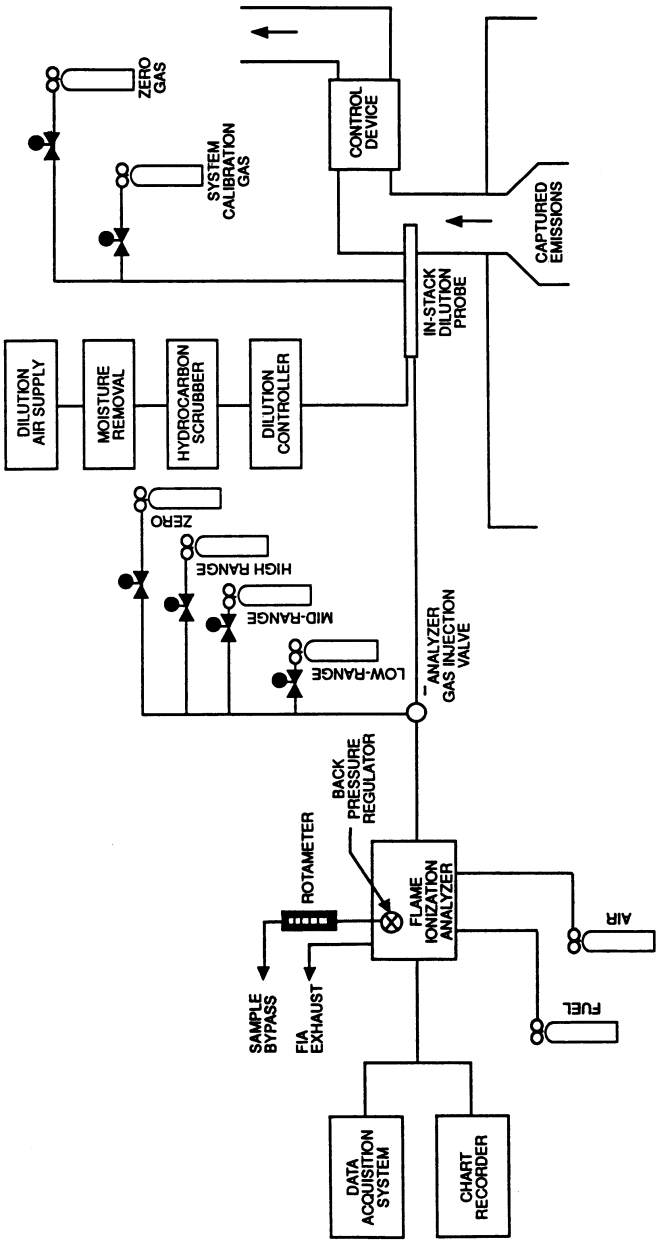

Figure 1. Captured emissions measurement system.

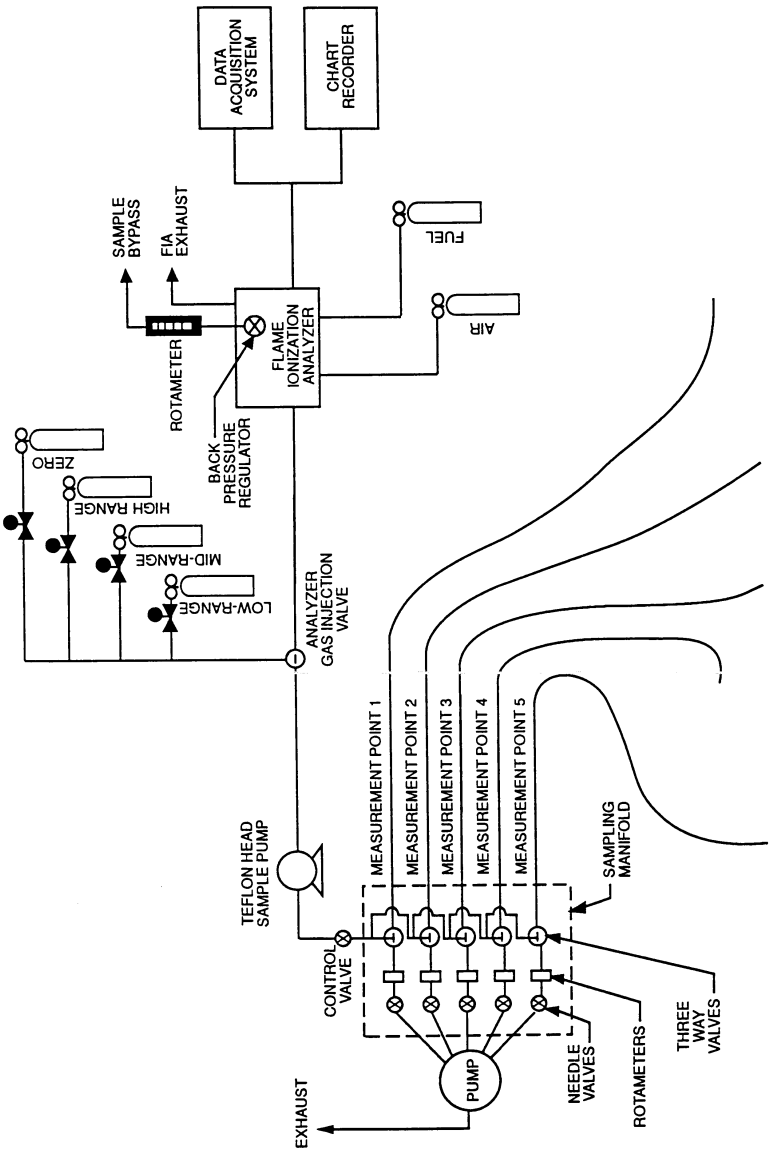

Figure 2. Background measurement system.

Procedure F.2—Fugitive VOC Emissions from Building Enclosures

1. Introduction

1.1 *Applicability.* This procedure is applicable for determining the fugitive volatile organic compounds (VOC) emissions from a building enclosure (BE). It is intended to be used as a segment in the development of liquid/gas or gas/gas protocols for determining VOC capture efficiency (CE) for surface coating and printing operations.

1.2 *Principle.* The total amount of fugitive VOC emissions (F_B) from the BE is calculated as the sum of the products of the

VOC content (C_{Fj}) of each fugitive emissions point, its flow rate (Q_{Fj}), and time (T_F).

1.3 *Measurement uncertainty.* The measurement uncertainties are estimated for each fugitive emissions point as follows: Q_{Fj}=±5.0 percent and C_{Fj}=±5.0 percent. Based on these numbers, the probable uncertainty for F_B is estimated at about ±11.2 percent.

1.4 *Sampling requirements.* A capture efficiency test shall consist of at least three sampling runs. The sampling time for each run should be at least 8 hours, unless otherwise approved.

1.5 *Notes.* Because this procedure is often applied in highly explosive areas, caution and care should be exercised in choosing appropriate equipment and installing and using the equipment. Mention of trade names or company products does not constitute endorsement. All gas concentrations (percent, ppm) are by volume, unless otherwise noted.

2. Apparatus and Reagents

2.1 *Gas VOC concentration.* A schematic of the measurement system is shown in Figure 1. The main components are described below:

2.1.1 *Sample probe.* Stainless steel, or equivalent. The probe shall be heated to prevent VOC condensation.

2.1.2 *Calibration valve assembly.* Three-way valve assembly at the outlet of sample probe to direct the zero and calibration gases to the analyzer. Other methods, such as quick-connect lines, to route calibration gases to the outlet of the sample probe are acceptable.

2.1.3 *Sample line.* Stainless steel or Teflon tubing to transport the sample gas to the analyzer. The sample line must be heated to prevent condensation.

2.1.4 *Sample pump.* A leak-free pump, to pull the sample gas through the system at a flow rate sufficient to minimize the response time of the measurement system. The components of the pump that contact the gas stream shall be constructed of staimust be heated to prevent condensation.

2.1.5 *Sample flow rate control.* A sample flow rate control valve and rotameter, or equivalent, to maintain a constant sampling rate within 10 percent. The flow rate control valve and rotameter must be heated to prevent condensation. A control valve may also be located on the sample pump bypass loop to assist in controlling the sample pressure and flow rate.

2.1.6 *Sample gas manifold.* Capable of diverting a portion of the sample gas stream to the flame ionization analyzer (FIA), and the remainder to the bypass discharge vent. The manifold components shall be constructed of stainless steel or Teflon. If emissions are to be measured at multiple locations, the measurement system shall be designed to use separate sampling probes, lines, and pumps for each measurement location and a common sample gas manifold and FIA. The sample gas manifold must be heated to prevent condensation.

2.1.7 *Organic Concentration Analyzer.* An FIA with a span value of 1.5 times the expected concentration as propane; however, other span values may be used if it can be demonstrated that they would provide more accurate measurements. The system shall be capable or exceeding the following specifications:

2.1.7.1 *Zero drift.* Less than ±3.0 percent of the span value.

2.1.7.2 *Calibration drift.* Less than ±3.0 percent of the span value.

2.1.7.3 *Calibration error.* Less than ±5.0 percent of the calibration gas value.

2.1.7.4 *Response time.* Less than 30 seconds.

2.1.8 *Integrator/data acquisition system.* An analog or digital device or computerized data acquisition system used to integrate the FIA response or compute the average response and record measurement data. The minimum data sampling frequency for computing average or integrated values is one measurement value every 5 seconds. The device shall be capable of recording average values at least once per minute.

2.1.9 *Calibration and other gases.* Gases used for calibration, fuel, and combustion air (if required) are contained in compressed gas cylinders. All calibration gases shall be traceable to NIST standards and shall be certified by the manufacturer to ±1 percent of the tag value. Additionally, the manufacturer of the cylinder should provide a recommended shelf life for each calibration gas cylinder over which the concentration does not change more than ±2 percent from the certified value. For calibration gas values not generally available, alternative methods for preparing calibration gas mixtures, such as dilution systems, may be used with prior approval.

2.1.9.1 *Fuel.* A 40 percent H_2/60 percent He or 40 percent H_2/60 percent N_2 gas mixture is recommended to avoid an oxygen synergism effect that reportedly occurs when oxygen concentration varies significantly from a mean value.

2.1.9.2 *Carrier gas.* High purity air with less than 1 ppm of organic material (propane or carbon equivalent) or less than 0.1 percent of the span value, whichever is greater.

2.1.9.3 *FIA linearity calibration gases.* Low-, mid-, and high-range gas mixture standards with nominal propane concentrations of 20–30, 45–55, and 70–80 percent of the span value in air, respectively. Other calibration values and other span values may be used if it can be shown that more accurate measurements would be achieved.

2.1.10 *Particulate filter.* An in-stack or an out-of-stack glass fiber filter is recommended if exhaust gas particulate loading is significant. An out-of-stack filter must be heated to prevent any condensation unless it

can be demonstrated that no condensation occurs.

2.2 *Fugitive emissions volumetric flow rate.*

2.2.1 *Flow direction indicators.* Any means of indicating inward or outward flow, such as light plastic film or paper streamers, smoke tubes, filaments, and sensory perception.

2.2.2 *Method 2 or 2A apparatus.* For determining volumetric flow rate. Anemometers or similar devices calibrated according to the manufacturer's instructions may be used when low velocities are present. Vane anemometers (Young-maximum response propeller), specialized pitots with electronic manometers (*e.g.,* Shortridge Instruments Inc., Airdata Multimeter 860) are commercially available with measurement thresholds of 15 and 8 mpm (50 and 25 fpm), respectively.

2.2.3 *Method 3 apparatus and reagents.* For determining molecular weight of the gas stream. An estimate of the molecular weight of the gas stream may be used if it can be justified.

2.2.4 *Method 4 apparatus and reagents.* For determining moisture content, if necessary.

3. Determination of Volumetric Flow Rate of Fugitive Emissions

3.1 *Preliminary determinations.* The purpose of this exercise is to determine which exhaust points should be measured for volumetric flow rates and VOC concentrations.

3.1.1 *Forced draft openings.* Identify all forced draft openings. Determine the volumetric flow rate according to Method 2.

3.1.2 *NDO's exhaust points.* The NDO's in the roof of a facility are considered to be exhaust points. Determine volumetric flow rate from these NDO's. Divide the cross-sectional area according to Method 1 using 12 equal areas. Use the appropriate velocity measurement devices, *e.g.,* propeller anemometers.

3.1.3 *Other NDO's.*

3.1.3.1 This step is optional. Determine the exhaust flow rate, including that of the control device, from the enclosure and the intake air flow rate. If the exhaust flow rate divided by the intake air flow rate is greater than 1.1, then all other NDO's are not considered to be significant exhaust points.

3.1.3.2 If the option above is not taken, identify all other NDO's and other potential points through which fugitive emissions may escape the enclosure. Then use the following criteria to determine whether flow rates and VOC concentrations need to be measured:

3.1.3.2.1 Using the appropriate flow direction indicator, determine the flow direction. An NDO with zero or inward flow is not an exhaust point.

3.1.3.2.2 Measure the outward volumetric flow rate from the remainder of the NDO's. If the collective flow rate is 2 percent, or less, of the flow rate from sections 3.1.1 and 3.1.2, then these NDO's, except those within two equivalent diameters (based on NDO opening) from VOC sources, may be considered to be non-exhaust points.

3.1.3.2.3 If the percentage calculated in section 3.1.3.2.2 is greater than 2 percent, those NDO's (except those within two equivalent diameters from VOC sources) whose volumetric flow rate totals 2 percent of the flow rate from sections 3.1.1 and 3.1.2 may be considered as non-exhaust points. All remaining NDO's shall be measured for volumetric flow rate and VOC concentrations during the CE test.

3.1.3.2.4 The tester may choose to measure VOC concentrations at the forced exhaust points and the NDO's. If the total VOC emissions from the NDO's are less than 2 percent of the emissions from the forced draft and roof NDO's, then these NDO's may be eliminated from further consideration.

3.2 *Determination of flow rates.*

3.2.1 Measure the volumetric flow rate at all locations identified as exhaust points in section 3.1. Divide each exhaust opening into 9 equal areas for rectangular openings and 8 for circular openings.

3.2.2 Measure the velocity at each site at least once every hour during each sampling run using Method 2 or 2A, if applicable, or using the low velocity instruments in section 2.2.2.

4. Determination of VOC Content of Fugitive Emissions

4.1 *Analysis duration.* Measure the VOC responses at each fugitive emission point during the entire test run or, if applicable, while the process is operating. If there are multiple emissions locations, design a sampling system to allow a single FIA to be used to determine the VOC responses at all sampling locations.

4.2 Gas VOC concentration.

4.2.1 Assemble the sample train as shown in Figure 1. Calibrate the FIA and conduct a system check according to the procedures in sections 5.1 and 5.3, respectively.

4.2.2 Install the sample probe so that the probe is centrally located in the stack, pipe, or duct, and is sealed tightly at the stack port connection.

4.2.3 Inject zero gas at the calibration valve assembly. Allow the measurement system response to reach zero. Measure the system response time as the time required for the system to reach the effluent concentration after the calibration valve has been returned to the effluent sampling position.

4.2.4 Conduct a system check before and a system drift check after each sampling run according to the procedures in sections 5.2 and 5.3. If the drift check following a run indicates unacceptable performance, the run is not valid. The tester may elect to perform drift checks during the run not to exceed one drift check per hour.

4.2.5 Verify that the sample lines, filter, and pump temperatures are 120±5 °C.

4.2.6 Begin sampling at the start of the test period and continue to sample during the entire run. Record the starting and ending times and any required process information as appropriate. If multiple emission locations are sampled using a single FIA, sample at each location for the same amount of time (*e.g.*, 2 minutes) and continue to switch from one location to another for the entire test run. Be sure that total sampling time at each location is the same at the end of the test run. Collect at least 4 separate measurements from each sample point during each hour of testing. Disregard the response measurements at each sampling location until two times the response time of the measurement system has elapsed. Continue sampling for at least 1 minute and record the concentration measurements.

4.3 *Alternative procedure.* The direct interface sampling and analysis procedure described in section 7.2 of Method 18 may be used to determine the gas VOC concentration. The system must be designed to collect and analyze at least one sample every 10 minutes.

5. Calibration and Quality Assurance

5.1 *FIA calibration and linearity check.* Make necessary adjustments to the air and fuel supplies for the FIA and ignite the burner. Allow the FIA to warm up for the period recommended by the manufacturer. Inject a calibration gas into the measurement system and adjust the back-pressure regulator to the value required to achieve the flow rates specified by the manufacturer. Inject the zero- and the high-range calibration gases and adjust the analyzer calibration to provide the proper responses. Inject the low- and mid-range gases and record the responses of the measurement system. The calibration and linearity of the system are acceptable if the responses for all four gases are within 5 percent of the respective gas values. If the performance of the system is not acceptable, repair or adjust the system and repeat the linearity check. Conduct a calibration and linearity check after assembling the analysis system and after a major change is made to the system.

5.2 *Systems drift checks.* Select the calibration gas that most closely approximates the concentration of the captured emissions for conducting the drift checks. Introduce the zero and calibration gas at the calibration valve assembly and verify that the appropriate gas flow rate and pressure are present at the FIA. Record the measurement system responses to the zero and calibration gases. The performance of the system is acceptable if the difference between the drift check measurement and the value obtained in section 5.1 is less than 3 percent of the span value. Conduct a system drift check at the end of each run.

5.3 *System check.* Inject the high range calibration gas at the inlet of the sampling probe and record the response. The performance of the system is acceptable if the measurement system response is within 5 percent of the value obtained in section 5.1 for the high range calibration gas. Conduct a system check before each test run.

5.4 *Analysis audit.* Immediately before each test analyze an audit cylinder as described in section 5.2. The analysis audit must agree with the audit cylinder concentration within 10 percent.

6. Nomenclature

C_{DH}=average measured concentration for the drift check calibration gas, ppm propane.

C_{DO}=average system drift check concentration for zero concentration gas, ppm propane.

C_{Fj}=corrected average VOC concentration of fugitive emissions at point j, ppm propane.

C_H=actual concentration of the drift check calibration gas, ppm propane.

C_j=uncorrected average VOC concentration measured at point j, ppm propane.

F_B=total VOC content of fugitive emissions from the building, kg.

K_1=1.830×10^{-6} kg/(m^3-ppm).

n=number of measurement points.

Q_{Fj}=average effluent volumetric flow rate corrected to standard conditions at fugitive emissions point j, m^3/min.

T_F=total duration of capture efficiency sampling run, min.

7. Calculations

7.1 *Total VOC fugitive emissions from the building.*

$$F_B = \sum_{j=1}^{n} C_{Fj} Q_{Fj} T_F K_1 \qquad \text{Eq. 1}$$

7.2 *VOC concentration of the fugitive emissions at point j.*

$$C_{Fj} = \left(C_j - C_{DO}\right) \frac{C_H}{C_{DH} - C_{DO}} \qquad \text{Eq. 2}$$

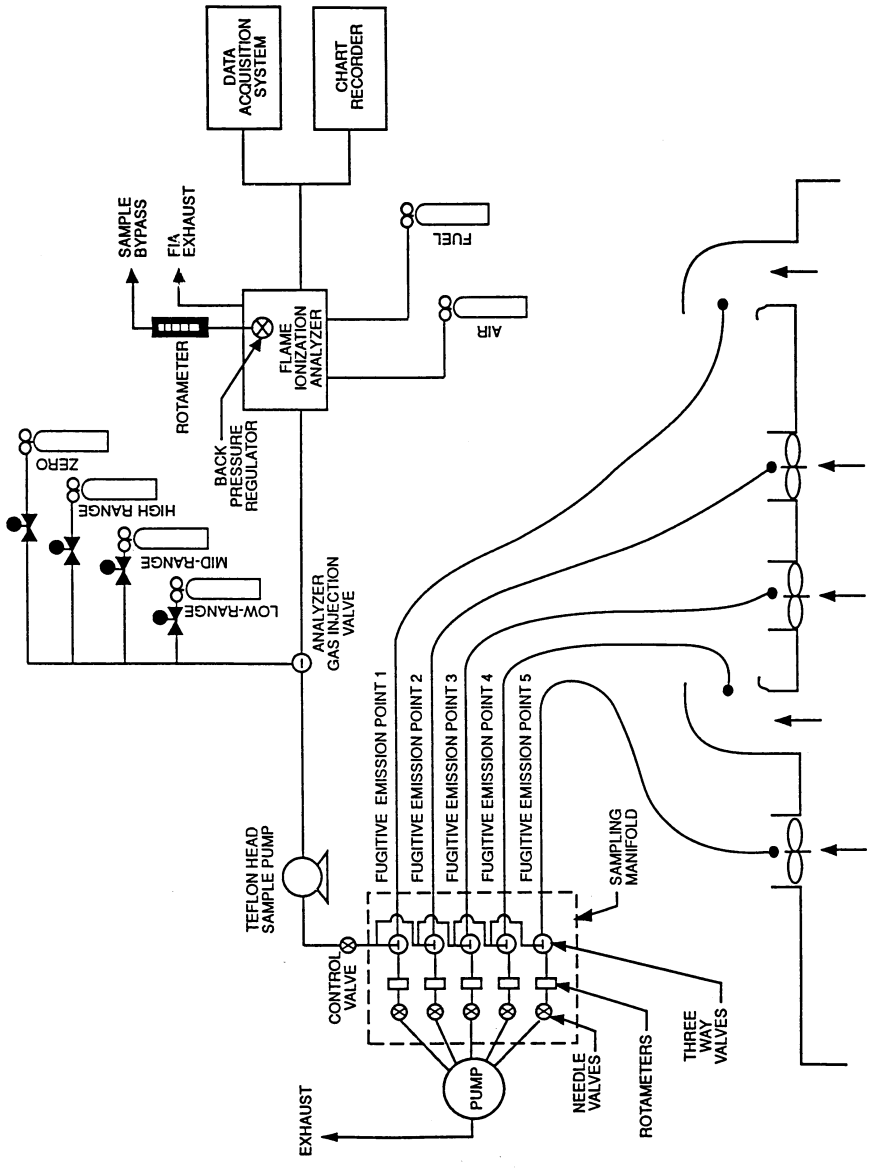

Figure 1. Fugitive emissions measurement system.

Procedure F.1—Fugitive VOC Emissions From Temporary Enclosures

1. Introduction

1.1 *Applicability.* This procedure is applicable for determining the fugitive volatile organic compounds (VOC) emissions from a temporary total enclosure (TTE). It is intended to be used as a segment in the development of liquid/gas or gas/gas protocols for determining VOC capture efficiency (CE) for surface coating and printing operations.

1.2 *Principle.* The amount of fugitive VOC emissions (F) from the TTE is calculated as the sum of the products of the VOC content

(C_{Fj}), the flow rate (Q_{Fj}), and the sampling time (T_F) from each fugitive emissions point.

1.3 *Estimated measurement uncertainty.* The measurement uncertainties are estimated for each fugitive emission point as follows: Q=±5.5 percent and C_{Fj}=±5.0 percent. Based on these numbers, the probable uncertainty for F is estimated at about ±7.4 percent.

1.4 *Sampling requirements.* A capture efficiency test shall consist of at least three sampling runs. The sampling time for each run should be at least 8 hours, unless otherwise approved.

1.5 *Notes.* Because this procedure is often applied in highly explosive areas, caution and care should be exercised in choosing appropriate equipment and installing and using the equipment. Mention of trade names or company products does not constitute endorsement. All gas concentrations (percent, ppm) are by volume, unless otherwise noted.

2. Apparatus and Reagents

2.1 *Gas VOC concentration.* A schematic of the measurement system is shown in Figure 1. The main components are described below:

2.1.1 *Sample probe.* Stainless steel, or equivalent. The probe shall be heated to prevent VOC condensation.

2.1.2 *Calibration valve assembly.* Three-way valve assembly at the outlet of sample probe to direct the zero and calibration gases to the analyzer. Other methods, such as quick-connect lines, to route calibration gases to the outlet of the sample probe are acceptable.

2.1.3 *Sample line.* Stainless steel or Teflon tubing to transport the sample gas to the analyzer. The sample line must be heated to prevent condensation.

2.1.4 *Sample pump.* A leak-free pump, to pull the sample gas through the system at a flow rate sufficient to minimize the response time of the measurement system. The components of the pump that contact the gas stream shall be constructed of stainless steel or Teflon. The sample pump must be heated to prevent condensation.

2.1.5 *Sample flow rate control.* A sample flow rate control valve and rotameter, or equivalent, to maintain a constant sampling rate within 10 percent. The flow control valve and rotameter must be heated to prevent condensation. A control valve may also be located on the sample pump bypass loop to assist in controlling the sample pressure and flow rate.

2.1.6 *Sample gas manifold.* Capable of diverting a portion of the sample gas stream to the flame ionization analyzer (FIA), and the remainder to the bypass discharge vent. The manifold components shall be constructed of stainless steel or Teflon. If emissions are to be measured at multiple locations, the measurement system shall be designed to use separate sampling probes, lines, and pumps for each measurement location and a common sample gas manifold and FIA. The sample gas manifold and connecting lines to the FIA must be heated to prevent condensation.

2.1.7 *Organic concentration analzyer.* An FIA with a span value of 1.5 times the expected concentration as propane; however, other span values may be used if it can be demonstrated that they would provide more accurate measurements. The system shall be capable of meeting or exceeding the following specifications:

2.1.7.1 *Zero drift.* Less than ±3.0 percent of the span value.

2.1.7.2 *Calibration drift.* Less than ±3.0 percent of the span value.

2.1.7.3 *Calibration error.* Less than ±5.0 percent of the calibration gas value.

2.1.7.4 *Response time.* Less than 30 seconds.

2.1.8 Integrator/data acquisition system. An analog or digital device or computerized data acquisition system used to integrate the FIA response or compute the average response and record measurement data. The minimum data sampling frequency for computing average or integrated values is one measurement value every 5 seconds. The device shall be capable of recording average values at least once per minute.

2.1.9 *Calibration and other gases.* Gases used for calibration, fuel, and combustion air (if required) are contained in compressed gas cylinders. All calibration gases shall be traceable to NIST standards and shall be certified by the manufacturer to ±1 percent of the tag value. Additionally, the manufacturer of the cylinder should provide a recommended shelf life for each calibration gas cylinder over which the concentration does not change more than ±2 percent from the certified value. For calibration gas values not generally available, alternative methods for preparing calibration gas mixtures, such as dilution systems, may be used with prior approval.

2.1.9.1 *Fuel.* A 40 percent H_2/60 percent He or 40 percent H_2/60 percent N_2 gas mixture is recommended to avoid an oxygen synergism effect that reportedly occurs when oxygen concentration varies significantly from a mean value.

2.1.9.2 *Carrier gas.* High purity air with less than 1 ppm of organic material (as propane or carbon equivalent) or less than 0.1 percent of the span value, whichever is greater.

2.1.9.3 *FIA linearity calibration gases.* Low-, mid-, and high-range gas mixture standards with nominal propane concentrations of 20–30, 45–55, and 70–80 percent of the span value in air, respectively. Other calibration values and other span values may be used if it can be shown that more accurate measurements would be achieved.

2.1.10 *Particulate filter.* An in-stack or an out-of-stack glass fiber filter is recommended if exhaust gas particulate loading

is significant. An out-of-stack filter must be heated to prevent any condensation unless it can be demonstrated that no condensation occurs.

2.2 *Fugitive emissions volumetric flow rate.*

2.2.1 *Method 2 or 2A apparatus.* For determining volumetric flow rate.

2.2.2 *Method 3 apparatus and reagents.* For determining molecular weight of the gas stream. An estimate of the molecular weight of the gas stream may be used if it can be justified.

2.2.3 *Method 4 apparatus and reagents.* For determining moisture content, if necessary.

2.3 *Temporary total enclosure.* The criteria for designing a TTE are discussed in Procedure T.

3. Determination of Volumetric Flow Rate of Fugitive Emissions

3.1 Locate all points where emissions are exhausted from the TTE. Using Method 1, determine the sampling points. Be sure to check each site for cyclonic or swirling flow.

3.2 Measure the velocity at each sampling site at least once every hour during each sampling run using Method 2 or 2A.

4. Determination of VOC Content of Fugitive Emissions

4.1 *Analysis duration.* Measure the VOC responses at each fugitive emission point during the entire test run or, if applicable, while the process is operating. If there are multiple emission locations, design a sampling system to allow a single FIA to be used to determine the VOC responses at all sampling locations.

4.2 *Gas VOC concentration.*

4.2.1 Assemble the sample train as shown in Figure 1. Calibrate the FIA and conduct a system check according to the procedures in sections 5.1 and 5.3, respectively.

4.2.2 Install the sample probe so that the probe is centrally located in the stack, pipe, or duct, and is sealed tightly at the stack port connection.

4.2.3 Inject zero gas at the calibration valve assembly. Allow the measurement system response to reach zero. Measure the system response time as the time required for the system to reach the effluent concentration after the calibration valve has been returned to the effluent sampling position.

4.2.4 Conduct a system check before and a system drift check after each sampling run according to the procedures in sections 5.2 and 5.3. If the drift check following a run indicates unacceptable performance, the run is not valid. The tester may elect to perform system drift checks during the run not to exceed one drift check per hour.

4.2.5 Verify that the sample lines, filter, and pump temperatures are 120 ± 5 °C.

4.2.6 Begin sampling at the start of the test period and continue to sample during the entire run. Record the starting and ending times and any required process information as appropriate. If multiple emission locations are sampled using a single FIA, sample at each location for the same amount of time (*e.g.*, 2 minutes) and continue to switch from one location to another for the entire test run. Be sure that total sampling time at each location is the same at the end of the test run. Collect at least 4 separate measurements from each sample point during each hour of testing. Disregard the response measurements at each sampling location until two times the response time of the measurement system has elapsed. Continue sampling for at least 1 minute and record the concentration measurements.

4.3 *Background concentration.*

4.3.1 *Determination of VOC background concentration.*

4.3.1.1 Locate all NDO's of the TTE. A sampling point shall be centrally located outside of the TTE at 4 equivalent diameters from each NDO, if possible. If there are more than 6 NDO's, choose 6 sampling points evenly spaced among the NDO's.

4.3.1.2 Assemble the sample train as shown in Figure 2. Calibrate the FIA and conduct a system check according to the procedures in sections 5.1 and 5.3.

4.3.1.3 Position the probe at the sampling location.

4.3.1.4 Determine the response time, conduct the system check and sample according to the procedures described in sections 4.2.3 to 4.2.6.

4.4 *Alternative procedure.* The direct interface sampling and analysis procedure described in section 7.2 of Method 18 may be used to determine the gas VOC concentration. The system must be designed to collect and analyze at least one sample every 10 minutes.

5. Calibration and Quality Assurance

5.1 *FIA calibration and linearity check.* Make necessary adjustments to the air and fuel supplies for the FIA and ignite the burner. Allow the FIA to warm up for the period recommended by the manufacturer. Inject a calibration gas into the measurement system and adjust the back-pressure regulator to the value required to achieve the flow rates specified by the manufacturer. Inject the zero- and the high-range calibration gases and adjust the analyzer calibration to provide the proper responses. Inject the low- and mid-range gases and record the responses of the measurement system. The calibration and linearity of the system are acceptable if the responses for all four gases are within 5 percent of the respective gas values. If the performance of the system is not acceptable, repair or adjust the system and repeat the linearity check. Conduct a

calibration and linearity check after assembling the analysis system and after a major change is made to the system.

5.2 *Systems drift checks.* Select the calibration gas concentration that most closely approximates that of the fugitive gas emissions to conduct the drift checks. Introduce the zero and calibration gas at the calibration valve assembly and verify that the appropriate gas flow rate and pressure are present at the FIA. Record the measurement system responses to the zero and calibration gases. The performance of the system is acceptable if the difference between the drift check measurement and the value obtained in section 5.1 is less than 3 percent of the span value. Conduct a system drift check at the end of each run.

5.3 *System check.* Inject the high range calibration gas at the inlet of the sampling probe and record the response. The performance of the system is acceptable if the measurement system response is within 5 percent of the value obtained in section 5.1 for the high range calibration gas. Conduct a system check before each test run.

5.4 *Analysis audit.* Immediately before each test analyze an audit cylinder as described in section 5.2. The analysis audit must agree with the audit cylinder concentration within 10 percent.

6. NOMENCLATURE

A_i=area of NDO i, ft^2.

A_N=total area of all NDO's in the enclosure, ft^2.

C_{Bi}=corrected average VOC concentration of background emissions at point i, ppm propane.

C_B=average background concentration, ppm propane.

C_{DH}=average measured concentration for the drift check calibration gas, ppm propane.

C_{DO}=average system drift check concentration for zero concentration gas, ppm propane.

C_{Fj}=corrected average VOC concentration of fugitive emissions at point j, ppm propane.

C_H=actual concentration of the drift check calibration gas, ppm propane.

C_i=uncorrected average background VOC concentration at point i, ppm propane.

C_j=uncorrected average VOC concentration measured at point j, ppm propane.

F=total VOC content of fugitive emissions, kg.

K_1=1.830×10^{-6} kg/(m^3−ppm).

n=number of measurement points.

Q_{Fj}=average effluent volumetric flow rate corrected to standard conditions at fugitive emissions point j, m^3/min.

T_F=total duration of fugitive emissions sampling run, min.

7. CALCULATIONS

7.1 *Total VOC fugitive emissions.*

$$\sum_{j=1}^{F=n}\left(C_{Fj}-C_B\right)Q_{Fj}T_FK_1 \qquad \text{Eq. 1}$$

7.2 *VOC concentration of the fugitive emissions at point j.*

$$C_{Fj}=\left(C_j-C_{DO}\right)\frac{C_H}{C_{DH}-C_{DO}} \qquad \text{Eq. 2}$$

7.3 *Background VOC concentration at point i.*

$$C_{Bi}=\left(C_i-C_{DO}\right)\frac{C_H}{C_{DH}-C_{DO}} \qquad \text{Eq. 3}$$

7.4 *Average background concentration.*

$$C_B=\frac{\sum_{i=1}^{n}C_{Bi}A_i}{nA_N} \qquad \text{Eq. 4}$$

NOTE: If the concentration at each point is within 20 percent of the average concentration of all points, the terms "A_i" and "A_N" may be deleted from Equation 4.

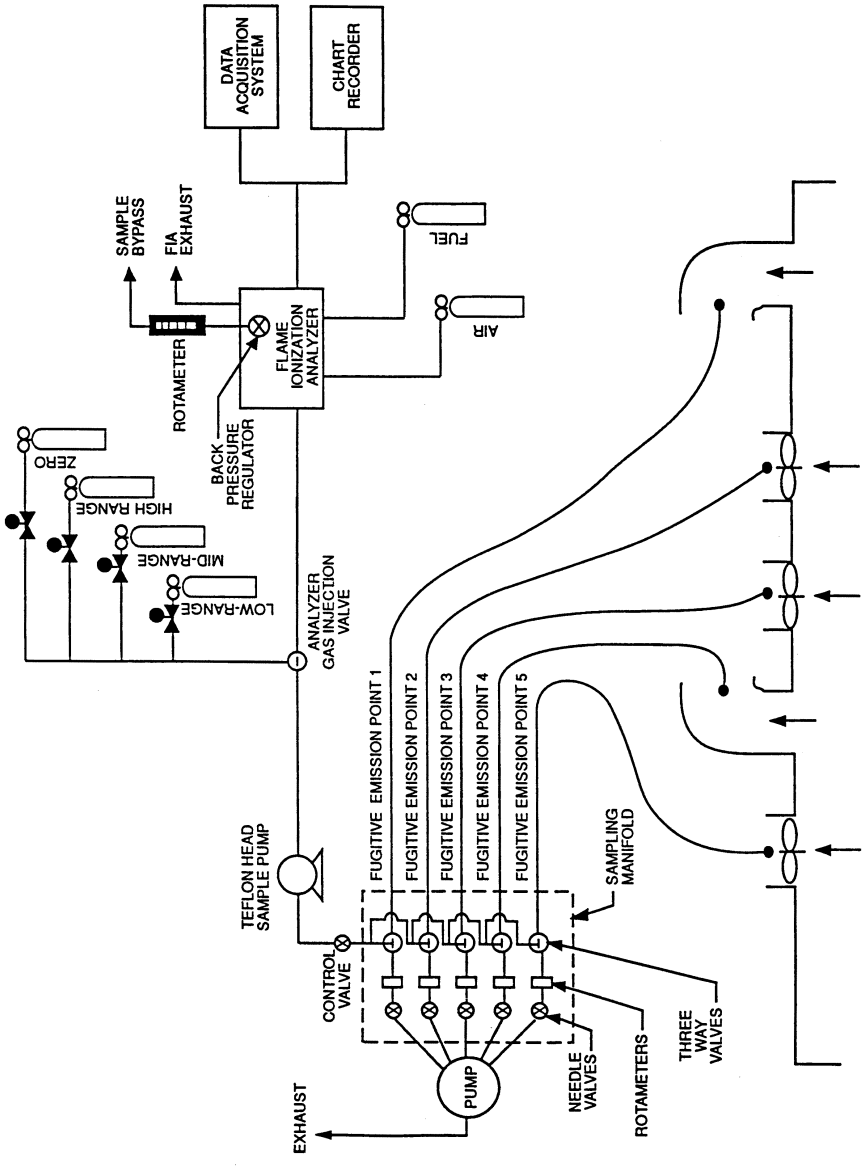

Figure 1. Fugitive emissions measurement system.

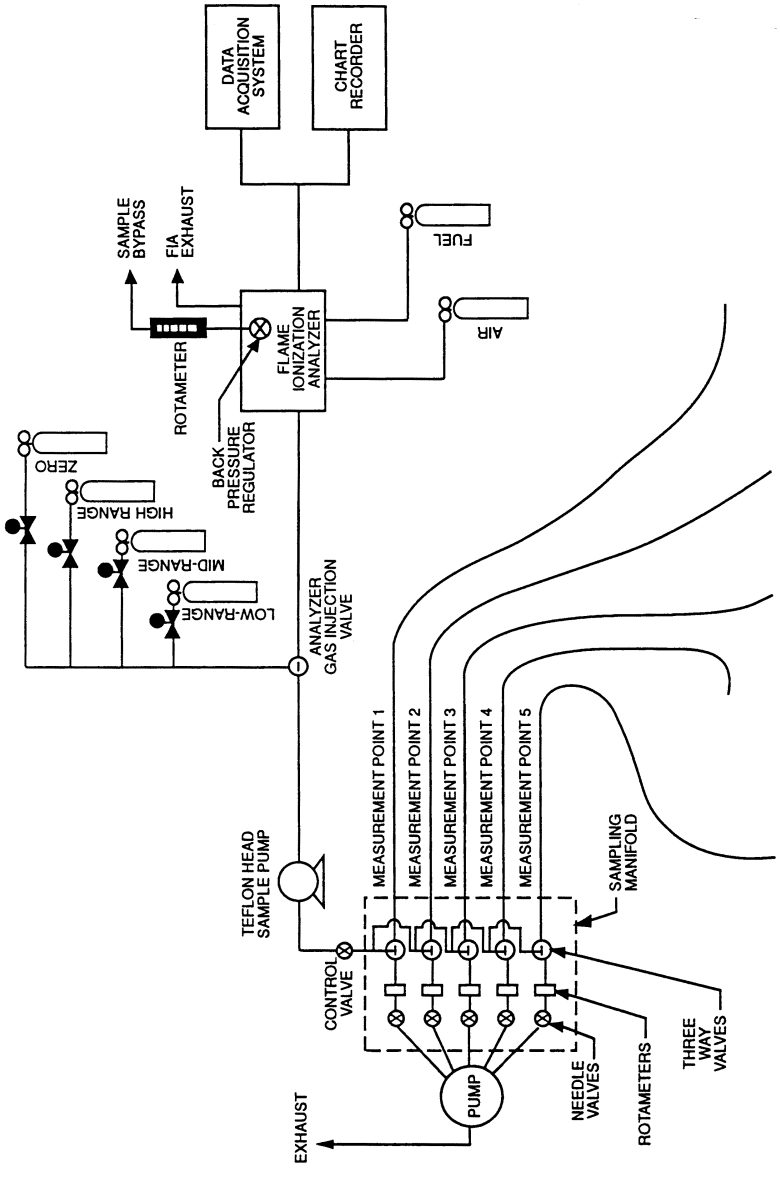

Figure 2. Background measurement system.

Procedure L—VOC Input

1. INTRODUCTION

1.1 *Applicability.* This procedure is applicable for determining the input of volatile organic compounds (VOC). It is intended to be used as a segment in the development of liquid/gas protocols for determining VOC capture efficiency (CE) for surface coating and printing operations.

1.2 *Principle.* The amount of VOC introduced to the process (L) is the sum of the products of the weight (W) of each VOC containing liquid (ink, paint, solvent, *etc.*) used and its VOC content (V). A sample of each

VOC containing liquid is analyzed with a flame ionization analyzer (FIA) to determine V.

1.3 *Estimated measurement uncertainty.* The measurement uncertainties are estimated for each VOC containing liquid as follows: W=±2.0 percent and V=±12.0 percent. Based on these numbers, the probable uncertainty for L is estimated at about ±12.2 percent for each VOC containing liquid.

1.4 *Sampling requirements.* A capture efficiency test shall consist of at least three sampling runs. The sampling time for each run should be at least 8 hours, unless otherwise approved.

1.5 *Notes.* Because this procedure is often applied in highly explosive areas, caution and care should be exercised in choosing appropriate equipment and installing and using the equipment. Mention of trade names or company products does not constitute endorsement. All gas concentrations (percent, ppm) are by volume, unless otherwise noted.

2. APPARATUS AND REAGENTS

2.1 *Liquid weight.*

2.1.1 *Balances/digital scales.* To weigh drums of VOC containing liquids to within 0.2 lb.

2.1.2 *Volume measurement apparatus (alternative).* Volume meters, flow meters, density measurement equipment, etc., as needed to achieve same accuracy as direct weight measurements.

2.2 *VOC content (flame ionization analyzer technique).* The liquid sample analysis system is shown in Figures 1 and 2. The following equipment is required:

2.2.1 *Sample collection can.* An appropriately sized metal can to be used to collect VOC containing materials. The can must be constructed in such a way that it can be grounded to the coating container.

2.2.2 *Needle valves.* To control gas flow.

2.2.3 *Regulators.* For carrier gas and calibration gas cylinders.

2.2.4 *Tubing.* Teflon or stainless steel tubing with diameters and lengths determined by connection requirements of equipment. The tubing between the sample oven outlet and the FIA shall be heated to maintain a temperature of 120±5 °C.

2.2.5 *Atmospheric vent.* A tee and 0- to 0.5-liter/min rotameter placed in the sampling line between the carrier gas cylinder and the VOC sample vessel to release the excess carrier gas. A toggle valve placed between the tee and the rotameter facilitates leak tests of the analysis system.

2.2.6 *Thermometer.* Capable of measuring the temperature of the hot water bath to within 1 °C.

2.2.7 *Sample oven.* Heated enclosure, containing calibration gas coil heaters, critical orifice, aspirator, and other liquid sample analysis components, capable of maintaining a temperature of 120±5 °C.

2.2.8 *Gas coil heaters.* Sufficient lengths of stainless steel or Teflon tubing to allow zero and calibration gases to be heated to the sample oven temperature before entering the critical orifice or aspirator.

2.2.9 *Water bath.* Capable of heating and maintaining a sample vessel temperature of 100±5 °C.

2.2.10 *Analytical balance.* To measure ±0.001 g.

2.2.11 *Disposable syringes.* 2-cc or 5-cc.

2.2.12 *Sample vessel.* Glass, 40-ml septum vial. A separate vessel is needed for each sample.

2.2.13 *Rubber stopper.* Two-hole stopper to accommodate 3.2-mm (⅛-in.) Teflon tubing, appropriately sized to fit the opening of the sample vessel. The rubber stopper should be wrapped in Teflon tape to provide a tighter seal and to prevent any reaction of the sample with the rubber stopper. Alternatively, any leak-free closure fabricated of non-reactive materials and accommodating the necessary tubing fittings may be used.

2.2.14 *Critical orifices.* Calibrated critical orifices capable of providing constant flow rates from 50 to 250 ml/min at known pressure drops. Sapphire orifice assemblies (available from O'Keefe Controls Company) and glass capillary tubing have been found to be adequate for this application.

2.2.15 *Vacuum gauge.* 0 -to 760-mm (0- to 30-in.) Hg U-Tube manometer or vacuum gauge.

2.2.16 *Pressure gauge.* Bourdon gauge capable of measuring the maximum air pressure at the aspirator inlet (e.g., 100 psig).

2.2.17 *Aspirator.* A device capable of generating sufficient vacuum at the sample vessel to create critical flow through the calibrated orifice when sufficient air pressure is present at the aspirator inlet. The aspirator must also provide sufficient sample pressure to operate the FIA. The sample is also mixed with the dilution gas within the aspirator.

2.2.18 *Soap bubble meter.* Of an appropriate size to calibrate the critical orifices in the system.

2.2.19 *Organic concentration analyzer.* An FIA with a span value of 1.5 times the expected concentration as propane; however other span values may be used if it can be demonstrated that they would provide more accurate measurements. The system shall be capable of meeting or exceeding the following specifications:

2.2.19.1 *Zero drift.* Less than ±3.0 percent of the span value.

2.2.19.2 *Calibration drift.* Less than ±3.0 percent of span value.

2.2.19.3 *Calibration error.* Less than ±5.0 percent of the calibration gas value.

2.2.20 *Integrator/data acquisition system.* An analog or digital device or computerized data acquisition system used to integrate the FIA response or compute the average response and record measurement data. The

minimum data sampling frequency for computing average or integrated values is one measurement value every 5 seconds. The device shall be capable of recording average values at least once per minute.

2.2.21 *Chart recorder (optional).* A chart recorder or similar device is recommended to provide a continuous analog display of the measurement results during the liquid sample analysis.

2.2.22 *Calibration and other gases.* For calibration, fuel, and combustion air (if required) contained in compressed gas cylinders. All calibration gases shall be traceable to NIST standards and shall be certified by the manufacturer to ±1 percent of the tag value. Additionally, the manufacturer of the cylinder should provide a recommended shelf life for each calibration gas cylinder over which the concentration does not change more than ±2 percent from the certified value. For calibration gas values not generally available, alternative methods for preparing calibration gas mixtures, such as dilution systems, may be used with prior approval.

2.2.22.1 *Fuel.* A 40 percent H_2/60 percent He or 40 percent H_2/60 percent N_2 gas mixture is recommended to avoid an oxygen synergism effect that reportedly occurs when oxygen concentration varies significantly from a mean value.

2.2.22.2 *Carrier gas.* High purity air with less than 1 ppm of organic material (as propane) or less than 0.1 percent of the span value, whichever is greater.

2.2.22.3 *FIA linearity calibration gases.* Low-, mid-, and high-range gas mixture standards with nominal propane concentrations of 20–30, 45–55, and 70–80 percent of the span value in air, respectively. Other calibration values and other span values may be used if it can be shown that more accurate measurements would be achieved.

2.2.22.4 *System calibration gas.* Gas mixture standard containing propane in air, approximately the undiluted VOC concentration expected for the liquid samples.

3. Determination of Liquid Input Weight

3.1 *Weight difference.* Determine the amount of material introduced to the process as the weight difference of the feed material before and after each sampling run. In determining the total VOC containing liquid usage, account for: (a) The initial (beginning) VOC containing liquid mixture; (b) any solvent added during the test run; (c) any coating added during the test run; and (d) any residual VOC containing liquid mixture remaining at the end of the sample run.

3.1.1 Identify all points where VOC containing liquids are introduced to the process. To obtain an accurate measurement of VOC containing liquids, start with an empty fountain (if applicable). After completing the run, drain the liquid in the fountain back into the liquid drum (if possible), and weigh the drum again. Weigh the VOC containing liquids to ±0.5 percent of the total weight (full) or ±0.1 percent of the total weight of VOC containing liquid used during the sample run, whichever is less. If the residual liquid cannot be returned to the drum, drain the fountain into a preweighted empty drum to determine the final weight of the liquid.

3.1.2 If it is not possible to measure a single representative mixture, than weigh the various components separately (*e.g.*, if solvent is added during the sampling run, weigh the solvent before it is added to the mixture). If a fress drum of VOC containing liquid is needed during the run, then weigh both the empty drum and fresh drum.

3.2 *Volume measurement (alternative).* If direct weight measurements are not feasible, the tester may use volume meters and flow rate meters (and density measurements) to determine the weight of liquids used if it can be demonstrated that the technique produces results equivalent to the direct weight measurements. If a single representative mixture cannot be measured, measure the components separately.

4. Determination of VOC Content in Input Liquids

4.1 *Collection of liquid samples.*

4.1.1 Collect a 100-ml or larger sample of the VOC containing liquid mixture at each application location at the beginning and end of each test run. A separate sample should be taken of each VOC containing liquid added to the application mixture during the test run. If a fresh drum is needed during the sampling run, then obtain a sample from the fresh drum.

4.1.2 When collecting the sample, ground the sample container to the coating drum. Fill the sample container as close to the rim as possible to minimize the amount of headspace.

4.1.3 After the sample is collected, seal the container so the sample cannot leak out or evaporate.

4.1.4 Label the container to identify clearly the contents.

4.2 *Liquid sample VOC content.*

4.2.1 Assemble the liquid VOC content analysis system as shown in Figure 1.

4.2.2 Permanently identify all of the critical orifices that may be used. Calibrate each critical orifice under the expected operating conditions (i.e., sample vacuum and temperature) against a volume meter as described in section 5.3.

4.2.3 Label and tare the sample vessels (including the stoppers and caps) and the syringes.

4.2.4 Install an empty sample vessel and perform a leak test of the system. Close the carrier gas valve and atmospheric vent and evacuate the sample vessel to 250 mm (10 in.) Hg absolute or less using the aspirator. Close

the toggle valve at the inlet to the aspirator and observe the vacuum for at least one minute. If there is any change in the sample pressure, release the vacuum, adjust or repair the apparatus as necessary and repeat the leak test.

4.2.5 Perform the analyzer calibration and linearity checks according to the procedure in section 5.1. Record the responses to each of the calibration gases and the back-pressure setting of the FIA.

4.2.6 Establish the appropriate dilution ratio by adjusting the aspirator air supply or substituting critical orifices. Operate the aspirator at a vacuum of at least 25 mm (1 in.) Hg greater than the vacuum necessary to achieve critical flow. Select the dilution ratio so that the maximum response of the FIA to the sample does not exceed the high-range calibration gas.

4.2.7 Perform system calibration checks at two levels by introducing compressed gases at the inlet to the sample vessel while the aspirator and dilution devices are operating. Perform these checks using the carrier gas (zero concentration) and the system calibration gas. If the response to the carrier gas exceeds ±0.5 percent of span, clean or repair the apparatus and repeat the check. Adjust the dilution ratio as necessary to achieve the correct response to the upscale check, but do not adjust the analyzer calibration. Record the identification of the orifice, aspirator air supply pressure, FIA back-pressure, and the responses of the FIA to the carrier and system calibration gases.

4.2.8 After completing the above checks, inject the system calibration gas for approximately 10 minutes. Time the exact duration of the gas injection using a stopwatch. Determine the area under the FIA response curve and calculate the system response factor based on the sample gas flow rate, gas concentration, and the duration of the injection as compared to the integrated response using Equations 2 and 3.

4.2.9 Verify that the sample oven and sample line temperatures are 120±5 °C and that the water bath temperature is 100±5 °C.

4.2.10 Fill a tared syringe with approximately 1 g of the VOC containing liquid and weigh it. Transfer the liquid to a tared sample vessel. Plug the sample vessel to minimize sample loss. Weigh the sample vessel containing the liquid to determine the amount of sample actually received. Also, as a quality control check, weigh the empty syringe to determine the amount of material delivered. The two coating sample weights should agree within ±0.02 g. If not, repeat the procedure until an acceptable sample is obtained.

4.2.11 Connect the vessel to the analysis system. Adjust the aspirator supply pressure to the correct value. Open the valve on the carrier gas supply to the sample vessel and adjust it to provide a slight excess flow to the atmospheric vent. As soon as the initial response of the FIA begins to decrease, immerse the sample vessel in the water bath. (Applying heat to the sample vessel too soon may cause the FID response to exceed the calibrated range of the instrument, and thus invalidate the analysis.)

4.2.12 Continuously measure and record the response of the FIA until all of the volatile material has been evaporated from the sample and the instrument response has returned to the baseline (i.e., response less than 0.5 percent of the span value). Observe the aspirator supply pressure, FIA back-pressure, atmospheric vent, and other system operating parameters during the run; repeat the analysis procedure if any of these parameters deviate from the values established during the system calibration checks in Section 4.2.7. After each sample perform the drift check described in Section 5.2. If the drift check results are acceptable, calculate the VOC content of the sample using the equations in Section 7. Integrate the area under the FIA response curve, or determine the average concentration response and the duration of sample analysis.

5. Calibration and Quality Assurance

5.1 *FIA calibration and linearity check.* Make necessary adjustments to the air and fuel supplies for the FIA and ignite the burner. Allow the FIA to warm up for the period recommended by the manufacturer. Inject a calibration gas into the measurement system and adjust the back-pressure regulator to the value required to achieve the flow rates specified by the manufacturer. Inject the zero- and the high-range calibration gases and adjust the analyzer calibration to provide the proper responses. Inject the low- and mid-range gases and record the responses of the measurement system. The calibration and linearity of the system are acceptable if the responses for all four gases are within 5 percent of the respective gas values. If the performance of the system is not acceptable, repair or adjust the system and repeat the linearity check. Conduct a calibration and linearity check after assembling the analysis system and after a major change is made to the system.

5.2 *Systems drift checks.* After each sample, repeat the system calibration checks in Section 4.2.7 before any adjustments to the FIA or measurement system are made. If the zero or calibration drift exceeds ±3 percent of the span value, discard the result and repeat the analysis.

5.3 *Critical orifice calibration.*

5.3.1 Each critical orifice must be calibrated at the specific operating conditions that it will be used. Therefore, assemble all components of the liquid sample analysis system as shown in Figure 3. A stopwatch is also required.

5.3.2 Turn on the sample oven, sample line, and water bath heaters and allow the system to reach the proper operating temperature. Adjust the aspirator to a vacuum of 380 mm (15 in.) Hg vacuum. Measure the time required for one soap bubble to move a known distance and record barometric pressure.

5.3.3 Repeat the calibration procedure at a vacuum of 406 mm (16 in.) Hg and at 25-mm (1-in.) Hg intervals until three consecutive determinations provide the same flow rate. Calculate the critical flow rate for the orifice in ml/min at standard conditions. Record the vacuum necessary to achieve critical flow.

6. Nomenclature

A_L=area under the response curve of the liquid sample, area count.

A_S=area under the response curve of the calibration gas, area count.

C_S=actual concentration of system calibration gas, ppm propane.

$K=1.830\times10^{-9}$ g/(ml-ppm).

L=total VOC content of liquid input, kg.

M_L=mass of liquid sample delivered to the sample vessel, g.

q=flow rate through critical orifice, ml/min.

RF=liquid analysis system response factor, g/area count.

T_S=total gas injection time for system calibration gas during integrator calibration, min.

V_{Fj}=final VOC fraction of VOC containing liquid j.

V_{Ij}=initial VOC fraction of VOC containing liquid j.

V_{Aj}=VOC fraction of VOC containing liquid j added during the run.

V=VOC fraction of liquid sample.

W_{Fj}=weight of VOC containing liquid j remaining at end of the run, kg.

W_{Ij}=weight of VOC containing liquid j at beginning of the run, kg.

W_{Aj}=weight of VOC containing liquid j added during the run, kg.

7. Calculations

7.1 *Total VOC content of the input VOC containing liquid.*

$$L = \sum_{j=1}^{n} V_{Ij}W_{Ij} - \sum_{j=1}^{n} V_{Fj}W_{Fj} + \sum_{j=1}^{n} V_{Aj}W_{Aj} \qquad \text{Eq. 1}$$

7.2 *Liquid sample analysis system response factor for systems using intergrators, grams/area counts.*

$$RF = \frac{C_S q T_S K}{A_S} \qquad \text{Eq. 2}$$

7.3 VOC content of the liquid sample.

$$V = \frac{A_L RF}{M_L} \qquad \text{Eq. 3}$$

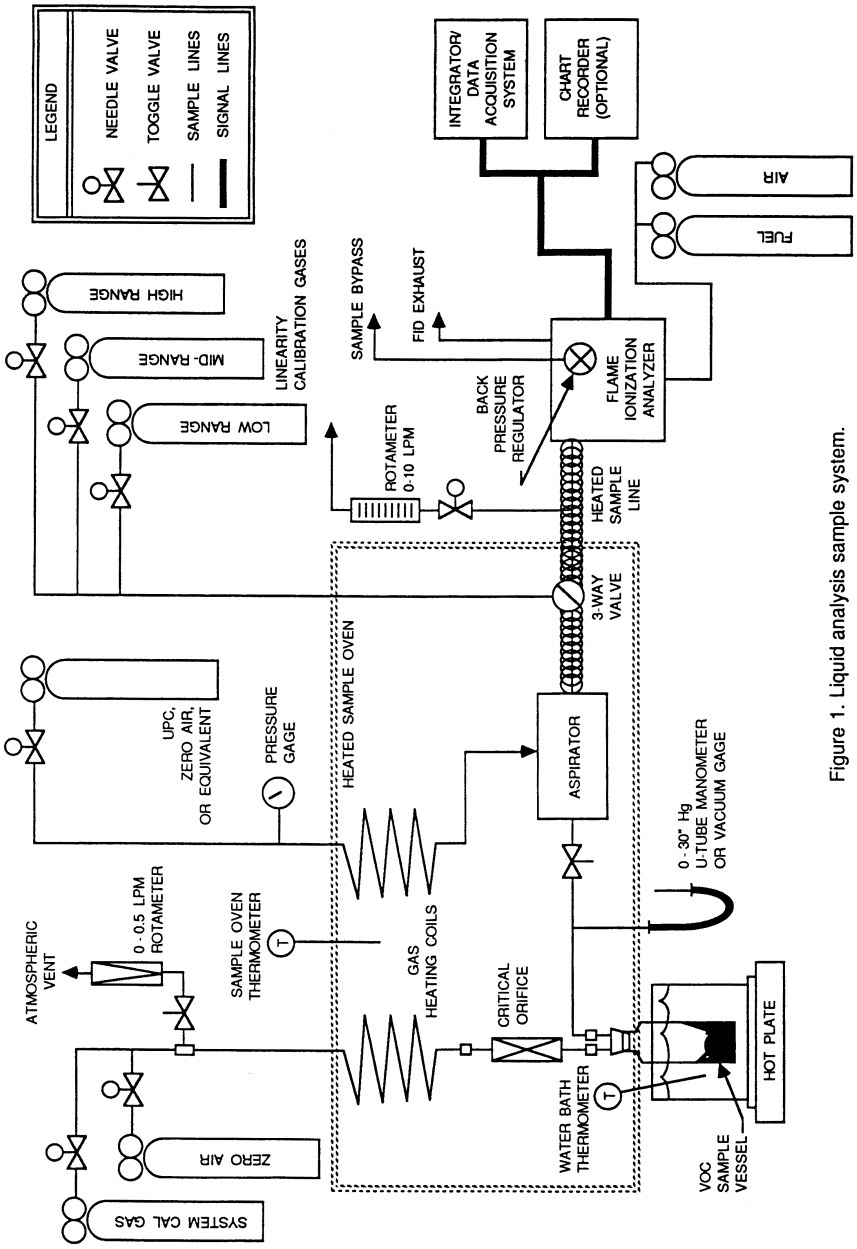

Figure 1. Liquid analysis sample system.

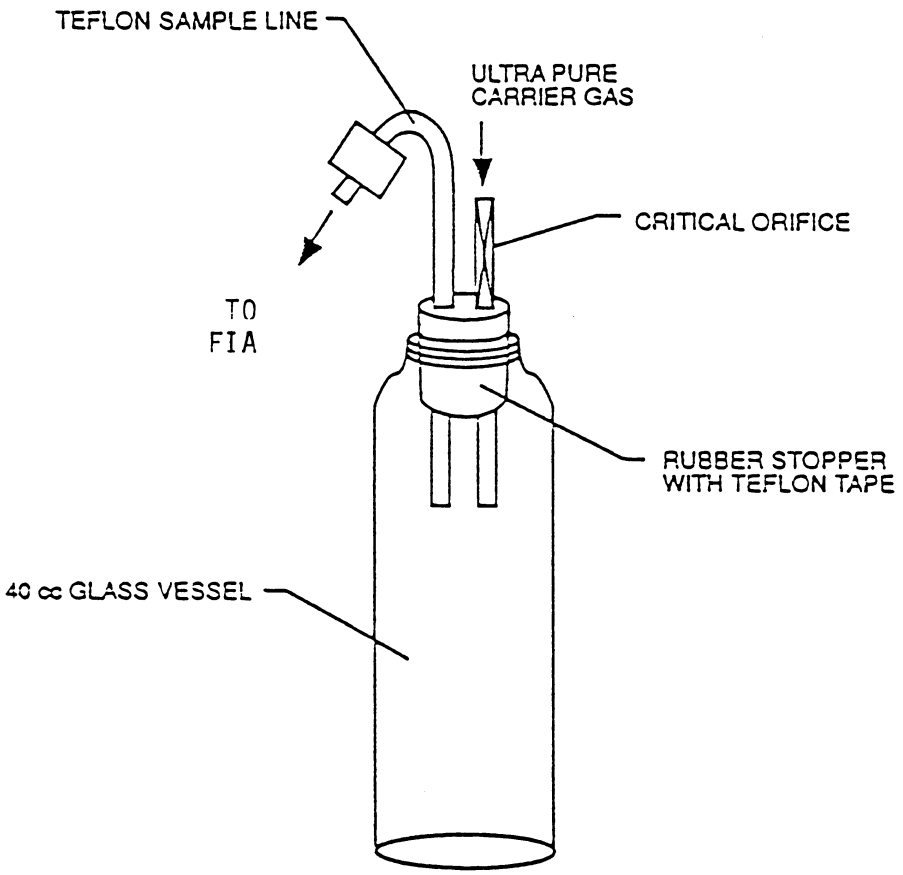

Figure 2. VOC sampling vessel.

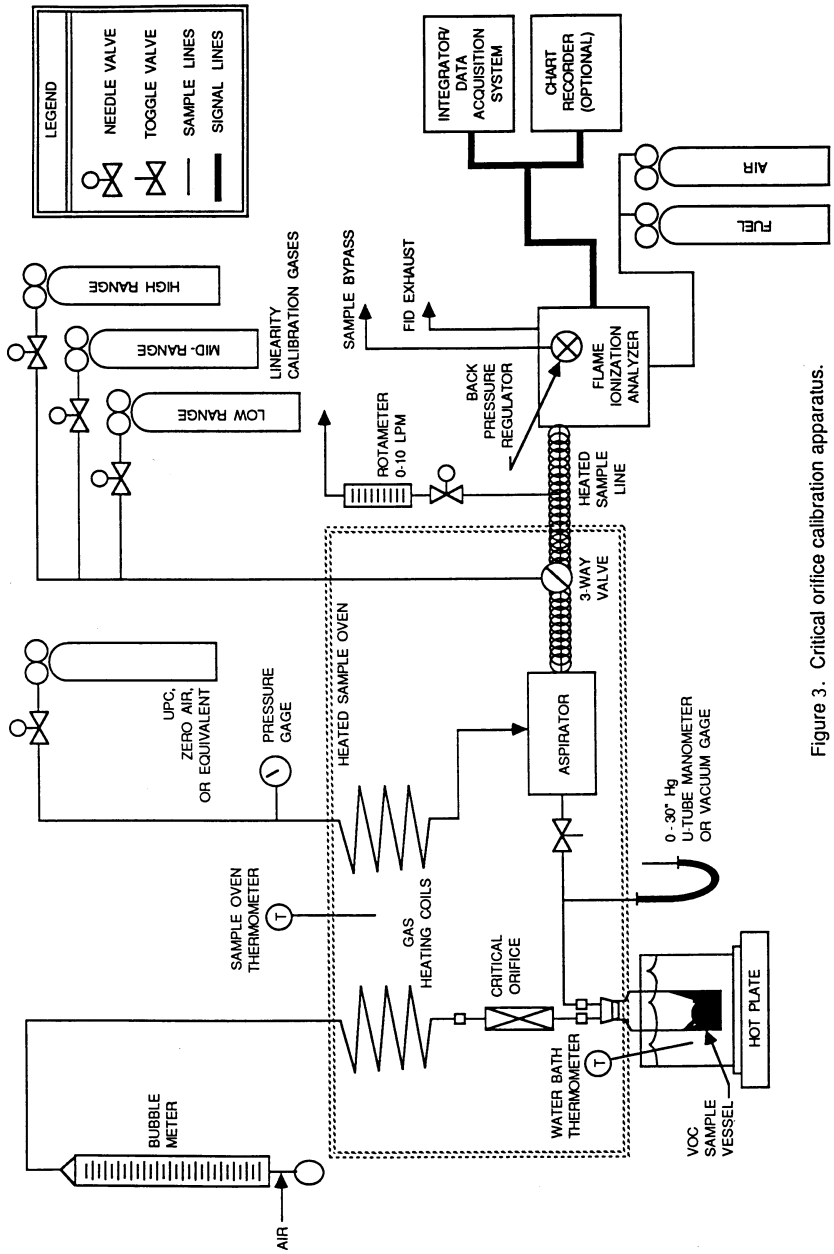

Figure 3. Critical orifice calibration apparatus.

Procedure T—Criteria for and Verification of a Permanent or Temporary Total Enclosure

1. Introduction

1.1 *Applicability*. This procedure is used to determine whether a permanent or temporary enclosure meets the criteria of a total enclosure.

1.2 *Principle*. An enclosure is evaluated against a set of criteria. If the criteria are met and if all the exhaust gases are ducted to a control device, then the volatile organic compounds (VOC) capture efficiency (CE) is assumed to be 100 percent and CE need not be measured. However, if part of the exhaust gas stream is not ducted to a control device, CE must be determined.

2. DEFINITIONS

2.1 *Natural Draft Opening (NDO)*—Any permanent opening in the enclosure that remains open during operation of the facility and is not connected to a duct in which a fan is installed.

2.2 *Permanent Total Enclosure (PTE)*—A permanently installed enclosure that completely surrounds a source of emissions such that all VOC emissions are captured and contained for discharge through a control device.

2.3 *Temporary Total Enclosure (TTE)*—A temporarily installed enclosure that completely surrounds a source of emissions such that all VOC emissions are captured and contained for discharge through ducts that allow for the accurate measurement of VOC rates.

3. CRITERIA OF A TEMPORARY TOTAL ENCLOSURE

3.1 Any NDO shall be at least 4 equivalent opening diameters from each VOC emitting point.

3.2 Any exhaust point from the enclosure shall be at least 4 equivalent duct or hood diameters from each NDO.

3.3 The total area of all NDO's shall not exceed 5 percent of the surface area of the enclosure's four walls, floor, and ceiling.

3.4 The average facial velocity (FV) of air through all NDO's shall be at least 3,600 m/hr (200 fpm). The direction of air through all NDO's shall be into the enclosure.

3.5 All access doors and windows whose areas are not included in section 3.3 and are not included in the calculation in section 3.4 shall be closed during routine operation of the process.

4. CRITERIA OF A PERMANENT TOTAL ENCLOSURE

4.1 Same as sections 3.1 and 3.3–3.5.

4.2 All VOC emissions must be captured and contained for discharge through a control device.

5. PROCEDURE

5.1 Determine the equivalent diameters of the NDO's and determine the distances from each VOC emitting point to all NDO's. Determine the equivalent diameter of each exhaust duct or hood and its distance to all NDO's. Calculate the distances in terms of equivalent diameters. The number of equivalent diameters shall be at least 4.

5.2 Measure the total area (A_t) of the enclosure and the total area (A_N) of all NDO's of the enclosure. Calculate the NDO to enclosure area ratio (NEAR) as follows:

$$NEAR=A_N/A_t$$

The NEAR must be ≤0.05.

5.3 Measure the volumetric flow rate, corrected to standard conditions, of each gas stream exiting the enclosure through an exhaust duct or hood using EPA Method 2. In some cases (*e.g.*, when the building is the enclosure), it may be necessary to measure the volumetric flow rate, corrected to standard conditions, of each gas stream entering the enclosure through a forced makeup air duct using Method 2. Calculate FV using the following equation:

$$FV=[Q_O - Q_I]/A_N$$

Where:

Q_O=the sum of the volumetric flow from all gas streams exiting the enclosure through an exhaust duct or hood.

Q_I=the sum of the volumetric flow from all gas streams into the enclosure through a forced makeup air duct; zero, if there is no forced makeup air into the enclosure.

A_N=total area of all NDO's in enclosure.

The FV shall be at least 3,600 m/hr (200 fpm).

5.4 Verify that the direction of air flow through all NDO's is inward. Use streamers, smoke tubes, tracer gases, etc. Strips of plastic wrapping film have been found to be effective. Monitor the direction of air flow at intervals of at least 10 minutes for at least 1 hour.

6. QUALITY ASSURANCE

6.1 The success of this protocol lies in designing the TTE to simulate the conditions that exist without the TTE, i.e., the effect of the TTE on the normal flow patterns around the affected facility or the amount of fugitive VOC emissions should be minimal. The TTE must enclose the application stations, coating reservoirs, and all areas from the application station to the oven. The oven does not have to be enclosed if it is under negative pressure. The NDO's of the temporary enclosure and a fugitive exhaust fan must be properly sized and placed.

6.2 Estimate the ventilation rate of the TTE that best simulates the conditions that exist without the TTE, i.e., the effect of the TTE on the normal flow patterns around the affected facility or the amount of fugitive

VOC emissions should be minimal. Figure 1 may be used as an aid. Measure the concentration (C_G) and flow rate (Q_G) of the captured gas stream, specify a safe concentration (C_F) for the fugitive gas stream, estimate the CE, and then use the plot in Figure 1 to determine the volumetric flowrate of the fugitive gas stream (Q_F). A fugitive VOC emission exhaust fan that has a variable flow control is desirable.

6.2.1 Monitor the concentration of VOC into the capture device without the TTE. To minimize the effect of temporal variation on the captured emissions, the baseline measurement should be made over as long a time period as practical. However, the process conditions must be the same for the measurement in section 6.2.3 as they are for this baseline measurement. This may require short measuring times for this quality control check before and after the construction of the TTE.

6.2.2 After the TTE is constructed, monitor the VOC concentration inside the TTE. This concentration shall continue to increase and must not exceed the safe level according to OSHA requirements for permissible exposure limits. An increase in VOC concentration indicates poor TTE design or poor capture efficiency.

6.2.3 Monitor the concentration of VOC into the capture device with the TTE. To limit the effect of the TTE on the process, the VOC concentration with and without the TTE must be within ±10 percent. If the measurements do not agree, adjust the ventilation rate from the TTE until they agree within 10 percent.

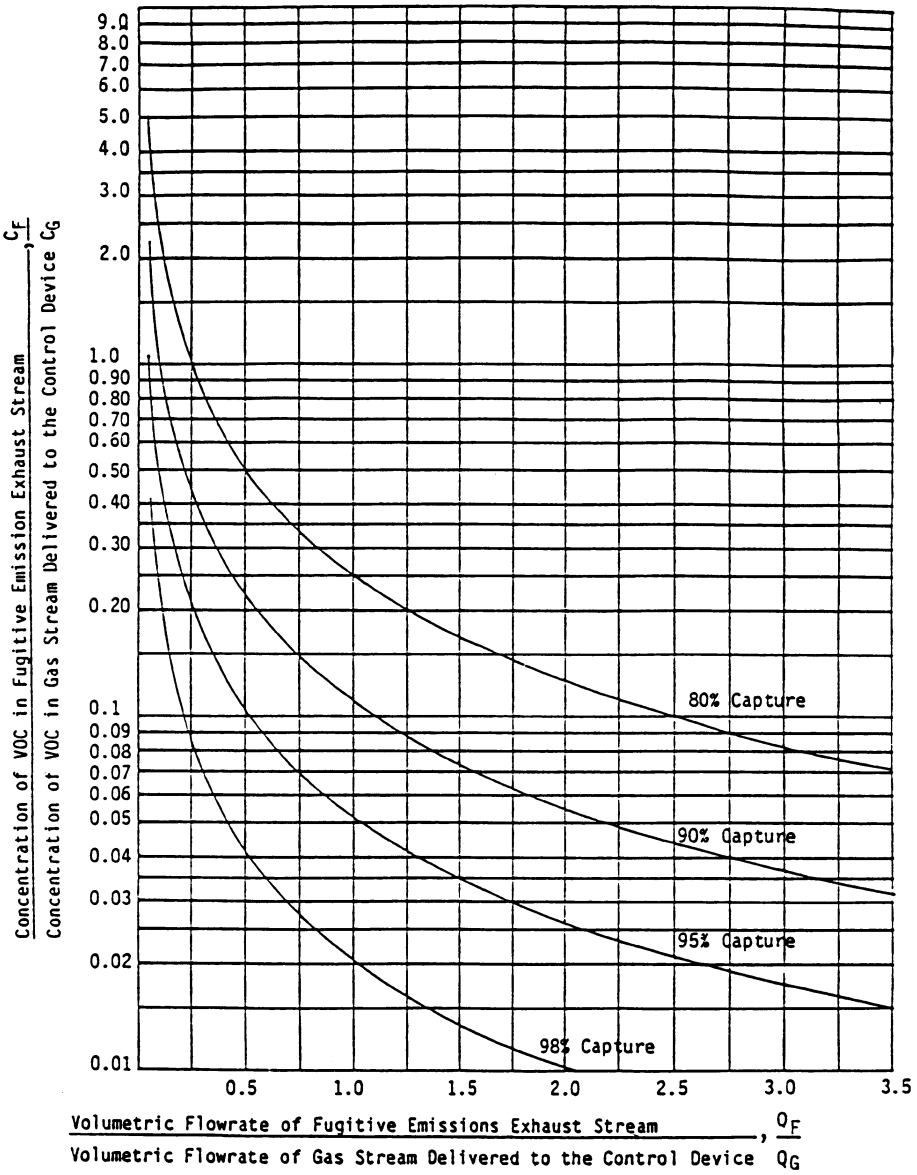

Figure 1. The Crumpler Chart

[55 FR 26856, June 29, 1990; 55 FR 31981, Aug. 6, 1990; 55 FR 39774, 39775, Sept. 28, 1990, as amended at 56 FR 24723, May 31, 1991; 56 FR 33712, July 23, 1991; 57 FR 3946, Feb. 3, 1992; 57 FR 7550, Mar. 3, 1992; 57 FR 27936, June 23, 1992; 58 FR 31653, June 4, 1993; 58 FR 34908, June 30, 1993; 59 FR 14112, Mar. 25, 1994; 59 FR 46569, Sept. 9, 1994; 60 FR 41, Jan. 3, 1995; 60 FR 13045, Mar. 10, 1995; 60 FR 14900, Mar. 21, 1995; 60 FR 43387, 43393, 43395, Aug. 21, 1995; 61 FR 54559, Oct. 21, 1996]

§ 52.742 Incorporation by reference.

The materials listed below are incorporated by reference in the corresponding sections noted. The incorporation by reference was approved by the Director of the Office of Federal Register in accordance with 5 U.S.C. 552(a) and 1 CFR part 51. These materials are incorporated as they exist on the date of approval, and a notice of any change in these materials will be published in the FEDERAL REGISTER. The materials are available from the sources listed below.

(a) The following material is available for purchase from the American Society for Testing and Materials (ASTM), 1916 Race Street, Philadelphia, PA 19103.

(1) ASTM D1475–85, Standard Test Method for Density of Paint, Varnish, Lacquer, and Related Products, for § 52.741(a)(4)(i)(B)(*3*)(*i*).

(2) ASTM D2369–87, Standard Test Method for Volatile Content of Coatings, for § 52.741(a)(4)(i)(B)(*3*)(*ii*).

(3) ASTM D3792–86, Standard Test Method for Water Content of Water-Reducible Paints by Direct Injection into a Gas Chromatograph, for § 52.741(a)(4)(i)(B)(*3*)(*iii*).

(4) ASTM D4017–81(Reapproved 1987), Standard Test Method for Water in Paints and Paint Materials by Karl Fischer Method, for § 52.741(a)(4)(i)(B)(*3*)(*iv*).

(5) ASTM D4457–85, Standard Test Method for Determination of Dichloromethane and 1,1,1-Trichloroethane in Paints and Coatings by Direct Injection into a Gas Chromatograph, for § 52.741(a)(4)(i)(B)(*3*)(*v*).

(6) ASTM D2697–86, Standard Test Method for Volume Nonvolatile Matter in Clear or Pigmented Coatings, for § 52.741(a)(4)(i)(B)(*3*)(*vi*).

(7) ASTM D3980–87, Standard Practice for Interlaboratory Testing of Paint and Related Materials, for § 52.741(a)(4)(i)(B)(*3*)(*vi*).

(8) ASTM E180–85, Standard Practice for Determining the Precision of ASTM Methods for Analysis and Testing of Industrial Chemicals, for § 52.741(a)(4)(i)(B)(*3*)(*viii*).

(9) ASTM D2372–85, Standard Method of Separation of Vehicle from Solvent-Reducible Paints, for § 52.741(a)(4)(i)(B)(*3*)(*ix*).

(10) ASTM D2879–86, Standard Test Method for Vapor Pressure-Temperature Relationship and Initial Decomposition Temperature of Liquids by Isoteniscope, for § 52.741(a)(3), (a)(8)(ii), (a)(9)(iii), and (a)(10)(iii).

(11) ASTM D323–82, Standard Test Method for Vapor Pressure of Petroleum Products (Reid Method), for § 52.741(a)(3).

(12) ASTM D86–82, Standard Method for Distillation of Petroleum Products, for § 52.741(a)(3).

(13) ASTM D3925–81(Reapproved 1985), Standard Practice for Sampling Liquid Paints and Related Pigment Coatings, for § 52.741(a)(4)(i)(A)(*1*).

(14) ASTM E300–86, Standard Practice for Sampling Industrial Chemicals, for § 52.741(a)(4)(i)(A)(*2*).

(b) The Evaporation Loss From External Floating-Roof Tanks, Publication 2517, second edition, February 1980, for § 52.741(a)(3) is available for purchase from the American Petroleum Institute, 2101 L Street, NW., Washington, DC 20037.

(c) The Standard Industrial Classification Manual, 1987, for § 52.741(a)(3) is available for purchase from the Superintendent of Documents, U.S. Government Printing Office, Washington, DC 20402.

(d) 35 Illinois Administrative Code 215, June 1989, subparts (B), (E) (sections 215.182, 215.183, and 215.184), (K) (sections 215.301 and 215.302), (Q) (excluding sections 215.432 and 215.436), (R) (excluding sections 215.447, 215.450, and 215.452), (S), (V), (X), (Y) (sections 215.582, 215.583, and 215.584), and (Z) of 35 Ill. Adm. Code 215 for § 52.741 (d)(l)–(d)(3); (e)(3), (e)(4); (h)(2); (i)(1), (i)(2); (j)(1)–(j)(3); (q)(1); (s)(1); (u)(1), (3); (v)(1); (w)(1); and (x)(1), (x)(3) is available from the United States Environmental Protection Agency, Air and Radiation Division, Region V, 230 S. Dearborn, Chicago, IL, 60604.

[55 FR 26909, June 29, 1990]

§ 52.743 Continuous monitoring.

(a) Alternative monitoring requirements established under Section 201.402 of Title 35, IAC must be either: Incorporated into a federally enforceable operating permit or construction permit or submitted to USEPA for approval as

a revision to the Illinois State Implementation Plan (SIP). Illinois shall set forth alternative emissions monitoring and reporting requirements to satisfy the intent of 40 CFR part 51, appendix P whenever Illinois exempts any source subject to Section 201.401 from installing continuous emission monitoring systems. Illinois may exempt a source if the source cannot install a continuous emission monitoring system because of physical plant limitations or extreme economic reasons, according to the criteria of Section 201.402.

(b) As codified at 40 CFR 52.737 (USEPA's approval of the Illinois operating permit program for the purpose of issuing federally enforceable construction and operating permits), USEPA reserves the right to deem an operating permit not federally enforceable. Such a determination will be made according to appropriate procedures including operating permit requirements promulgated at 54 FR 27274 (June 28, 1989) and will be based upon either; the permit, permit approval procedures or state or local permit requirements which do not conform with the operating permit program requirements or the requirements of USEPA's underlying regulations. Among other things, underlying requirements include 40 CFR 51.214 and part 51, appendix P and Illinois' approved SIP, 40 CFR part 52. Should USEPA deem an operating or construction permit containing alternative monitoring requirements not federally enforceable, the underlying continuous monitoring requirements at Section 201.401 of the State rule would be the Federal requirements contained in the SIP to which the source would be subject. This interpretation of the impact of an operating permit deemed not federally enforceable by USEPA on a source to which it was issued was acknowledged by the State in a March 3, 1993, letter from Bharat Mathur, Chief, Bureau of Air, Illinois Environmental Protection Agency, to Stephen Rothblatt, Chief, Regulation Development Branch, Region 5, USEPA.

[58 FR 17783, Apr. 6, 1993]

§ 52.744 Small business stationary source technical and environmental compliance assistance program.

The Illinois program submitted on November 12, 1992, as a requested revision to the Illinois State Implementation Plan satisfies the requirements of section 507 of the Clean Air Act Amendments of 1990.

[58 FR 45451, Aug. 30, 1993]

Subpart P—Indiana

§ 52.769 Identification of plan—conditional approval.

The plan revision commitment listed in paragraphs (a) and (b) of this section were submitted on the dates specified.

(a)–(b) [Reserved]

[60 FR 22241, 22242, May 4, 1995, as amended at 62 FR 19056, Apr. 18, 1997; 63 FR 35144, June 29, 1998]

§ 52.770 Identification of plan.

(a) Title of plan: "State of Indiana Air Pollution Control Implementation Plan."

(b) The plan was officially submitted on January 31, 1972.

(c) The plan revisions listed below were submitted on the dates specified.

(1) The State Air Pollution Control Board submitted a SO_2 control strategy for the City of Indianapolis on March 16, 1972.

(2) The Governor submitted Pub. L. 100, Regulation APC 12–R and 13 through 17 on April 11, 1972.

(3) On May 1, 1972, the Governor's office submitted an errata sheet and revised pages for the State plan.

(4) A request for a nine month extension to achieve secondary SO_2 standards in the Indianapolis Region was made by the Governor on May 16, 1972.

(5) The State Air Pollution Control Board submitted additional information on surveillance methodology (nonregulatory) on May 17, 1972.

(6) Regulation APC 4–R was transmitted by the Governor on June 30, 1972.

(7) Assurance that emission data for sources was available for public inspection was given on July 24, 1972, by the Technical Secretary to the Indiana Board.

(8) Clarification of a policy on availability of emission data to the public sent August 17, 1972, by the Technical Secretary to the Indiana Board.

(9) On September 15, 1972, amendments to State control regulations 13, 15 and 16 were submitted to the Governor.

(10) On May 8, 1973, the Governor submitted a new regulation (APC–19) which replaced APC–1.

(11) The Governor submitted a transportation control plan for Marion County on October 19, 1973.

(12) On March 7, 1974, the Technical Secretary of the Air Pollution Control Board, acting for the Governor of Indiana, submitted new regulation APC–20.

(13) On October 3, 1974, the Technical Secretary submitted revised regulations APC–16 covering CO, APC–17 covering NO_2 and a new regulation APC–22 covering classification of counties for SO_2, oxidants, particulates, NO_2 and CO.

(14) On November 8, 1974, the Technical Secretary submitted revised regulation APC–3 covering visible emissions and revised regulation APC–15 covering hydrocarbons.

(15) On December 5, 1974, the Technical Secretary submitted revised regulation APC–13 covering SO_2. On July 18, 1975, an updated Technical Support Document on APC–13 was submitted by the Technical Secretary.

(16) On June 14, 1976, the Technical Secretary submitted enforcement orders varying the final sulfur dioxide emission limitations for the Warrick and Culley electrical generating stations in Warrick County.

(17) On March 16, 1977, the Technical Secretary submitted new regulation APC–8, Continuous Emission Monitoring; and revised regulations APC–7, Incinerators; and APC–14, Indiana Ambient Air Quality Standards.

(18) On May 18, 1977, the Technical Secretary submitted revised regulation APC–2, Open Burning.

(19) On June 26, 1979, the Governor submitted a revised sulfur dioxide strategy, including regulation APC 13 with appendix, which was promulgated by the State on June 19, 1979 for all areas of the State. This included the Part D sulfur dioxide regulations for Lake, LaPorte, and Marion Counties. On August 27, 1980 and July 16, 1981 the State committed itself to correct conditionally approved items within their strategy. On October 6, 1980, the State submitted a recodified version of APC 13 which was promulgated by the State on August 27, 1980. This included 325 IAC 7, 325 IAC 1.1–6, 325 IAC 1.1–7–2 and 4, 325 IAC 12–5–1 and 2(a), 325 IAC 12–9–1 and 4, and 325 IAC 12–18–1 and 2. EPA is not taking action on: (i) 325 IAC 7 as it applies to Floyd and Vigo Counties, (ii) the 30-day averaging compliance method contained in 325 IAC 7–1–3, and (iii) the stack height provision for NIPSCO's Mitchell Station in the Lake County SO_2 strategy and (4) the stack height provisions for IPALCO's Stout Generating Chemicals Company, and Detroit Diesel Allison's Plant #8 in the Marion County SO_2 strategy.

(20) On June 26, 1979, the State of Indiana submitted to EPA revisions to the ozone and carbon monoxide portions (section 3.3.24) of its Marion County State Implementation Plan. On March 11, 1980, the state submitted revisions to the Marion County technical appendix to section 3.3.24. On May 19, 1980, the state submitted ozone and carbon monoxide attainment demonstrations for Marion County (section 1.5). On September 8, 1980 the state submitted its memoranda of understanding. On October 9 and October 15, 1980, the state submitted documentation concerning interagency coordination and the analysis of transportation control measures. On January 7, 1981, the state submitted corrections and clarifications in response to EPA's notice of proposed rulemaking (45 FR 81070).

(21) On June 26, 1979 Indiana submitted a motor vehicle inspection and maintenance program for Clark, Floyd, Lake, and Porter Counties. Additional commitments were submitted on April 7, 1980; June 12, 1980; August 27, 1980; November 13, 1980 and November 24, 1980.

(22) On June 26, 1979, Indiana made submittals pertaining to section 121 Consultation, section 110(a)(2)(K)—Permit Fees, section 126—Interstate Pollution, section 127—Public Notification, section 128—State Boards and section 110(a)(2)(F) (ii) and (iii)—Continuous

Emission Monitoring Additional commitments were secured on April 17, 1980, June 25, 1980, August 1, 1980, November 10, 1980, December 9, 1980, and December 31, 1980. A revised version of Indiana's continuous emission monitoring regulation (325 IAC 3) was submitted on October 6, 1980.

(23) On June 26, 1979, the State of Indiana submitted a revision to provide for modification of the existing air quality surveillance network.

(24) On June 26, 1979, the Governor submitted a revised new source review regulation, APC–19. Additional information and commitments were submitted on June 25, 1980 and May 19, 1981. EPA is not taking action on section 7 of APC–19, Prevention of Significant deterioration.

(25) On June 26, 1979 the Governor submitted revised emission limits for Knauf Fiberglass, Shelby County. Additional information was submitted by November 21, 1979. The emission limitations were recodified as 325 IAC 11–4 and 11–4 Appendix A and were resubmitted on October 6, 1980.

(26) On June 26, 1979 the Governor submitted Indiana's definition regulation, APC–1. The definitions were recodified as 325 IAC 1.1–1 and resubmitted on October 6, 1980. On January 21, 1981 Indiana submitted a revised definition for "positive net air quality benefit." EPA is taking no action on 325 IAC 1.1–1–82, definition of "State Implementation Plan (SIP)."

(27) On October 6, 1980, Indiana submitted Regulation 325 IAC 1.1–2 (formerly APC 14) which includes the primary and secondary ambient air quality standards for ozone and lead.

(28) On February 26, 1981, Indiana submitted a revision to its plan waiving the State's sulfur dioxide air monitoring requirement of section 4(a) of Regulation 325 IAC 7–1 for the area around Public Service of Indiana's Noblesville Generating Station.

(29) On June 26, 1979, May 19, 1980, September 24, 1980, October 9, 1980 and October 15, 1980, Indiana submitted transportation control plans and ozone demonstrations of attainment for Lake, Porter, Clark, Floyd, St. Joseph, Elkhart and Allen Counties. It also submitted a carbon monoxide demonstration of attainment for Lake County. EPA is taking no action on the ozone demonstration of attainment for St. Joseph, Elkhart and Allen Counties.

(30) On April 10, 1981, Indiana submitted revised emission limits for Indiana Farm Bureau Cooperative Association's Beech Grove plant.

(31) On February 11, 1980, Indiana submitted a revised sulfur dioxide strategy for Vigo County. Technical information was submitted on December 10, 1979 and on May 30, 1980. On October 6, 1980, the State submitted a recodified version of the Vigo County Regulations, 325 IAC Article 7, which was promulgated by the State on August 27, 1980. EPA is not taking action on the 30-day averaging compliance method contained in 325 IAC 7–1–3 as it applies to Vigo County.

(32) On November 24, 1981, Indiana submitted site specific emission limitations for Tecumseh Pipe Line Company, Schererville; and Wayne Transportation Division, Richmond.

(33) On February 11, 1980, Indiana submitted APC 15. EPA is taking no action the "bubble" provisions contained in Section 8(a)(2) of revised APC 15.

(34) On June 26, 1979, the Governor of Indiana submitted general TSP RACT emisson limits for nonattainment areas. These regulations were amended and recodified as 325 IAC 6–1 and resubmitted on October 6, 1980. On October 6, 1980, the State submitted a revised TSP regulation for process sources, 325 IAC 6–3; a source specific Dearborn County strategy (amendments were submitted on August 10, 1981), 325 IAC 6–1–8; a source specific Dubois County strategy, 325 IAC 6–1–9; and a source specific Wayne County strategy (amendments were submitted on January 29, 1981), 325 IAC 6–1–14. On February 11, 1980, Indiana submitted a source specific Marion County strategy (amendments were submitted on October 28, 1981), 325 IAC 6–1–12. EPA is deferring rulemaking at this time on the coke battery emission limitations in the Marion County strategy. On January 29, 1981, the State submitted a source specific Vigo County strategy (amendments were submitted on October 28, 1981 and May 7, 1982), 325 IAC 6–1–13; a source specific Howard County strategy, 325 IAC 6–1–15; and a source specific Vanderburgh

County strategy (amendments were submitted on October 28, 1981), 325 IAC 6–1–16. EPA is deferring rulemaking at this time on the coke battery emission limitations in the Vigo County strategy and on whether the Howard County strategy currently contains all the elements required by the Clean Air Act. On July 8, 1981, the State submitted a source specific Clark County strategy, 325 IAC 6–1–17, and a source specific St. Joseph County strategy, 325 IAC 6–1–18. On January 29, 1981 and May 7, 1982, the State submitted additional information and commitments.

(35) On October 6, 1980, Indiana submitted its regulations as recodified. Amendments were submitted on January 29, 1981 and March 18, 1981. EPA's approval is directed specifically to the codification numbering system change, not to the substance within each of the codified rules.

(36) [Reserved]

(37) On May 10, 1982, Indiana submitted source specific emission limits contained in operating permits for the Bunge Corporation, Globe Industries, Skyline Corporation, and Dubois County Farm Bureau Co-op Assn., Inc. as revisions to the Indiana SIP.

(38) On April 27, 1982, Indiana submitted source specific TSP emission limits for Huntingburg Wood Products, Jasper Desk Company, Jasper Office Furniture Company, Arist-O-Kraft Company, Mohr Construction Company, Dana Corporation, and Allis Chalmers Corporation. On April 29, 1982, Indiana submitted source specific VOC emission limits for McGee Refining Corporation, Hesco Industries, and Clark Oil and Refining Corporation.

(39) On November 25, 1980, Indiana submitted 325 IAC Article 8, Volatile Organic Compound Regulations. This regulation adds Group II CTG requirements to Indiana's VOC plan and was State promulgated on October 15, 1980. EPA is not taking action on 325 IAC 8–1.1 Section 2(b), Bubble Approach.

(40) On November 24, 1981, Indiana submitted site specific emission limitations for Jeffboat, Inc., Jeffersonville.

(41) On November 23, 1982, Indiana submitted source-specific emission limits for Paul H. Rohe Company, Inc.

(42) On June 26, 1979, Indiana submitted its coke oven battery regulation, APC 9. On October 6, 1980 Indiana resubmitted this regulation recodified as 325 IAC 11–3. On August 27, 1981, Indiana submitted amendments to 325 IAC 11–3. EPA is taking no action on 325 IAC 11–3–2(a), Pre-Carbonization Emissions. It is taking no action on 325 IAC 11–3–2(i), Underfire Particulate and Sulfur Dioxide Emissions, as it applies to Lake County.

(43) On February 26, 1981 and June 22, 1982, Indiana submitted a 9.57 lbs/MMBTU sulfur dioxide emission limit for IMEC's Breed Generating Station in Sullivan County. This limit supersedes that approved at paragraph (c)(19).

(44) On June 28, 1982, Indiana submitted new open burning regulations for Marion County. An amendment was submitted on August 25, 1982.

(45) On March 15, 1983, Indiana submitted a revision to the TSP and SO_2 portions of its SIP in the form of operating permits for the Sisters of Providence Convent in St. Mary-of-the-Woods, Indiana.

(46) On November 29, 1982, and December 9, 1982, Indiana submitted amendments to 325 IAC 11–4, Fiber Glass Insulation Manufacturing (Superfine Process) Limitations.

(47) On August 17, 1983, Indiana submitted emission limits of 1.8 lbs/hr and 2.4 tons/yr for the boilers at Jasper Cabinet Co., Dubois County. The 1.8 lbs/hr limit replaces the 7.6 lbs/hr limit approved for this source in subparagraph 34.

(48) [Reserved]

(49) On March 28, 1983, Indiana submitted a 20% 2-hour opacity limit as an "equivalent visible emission limit" (EVEL) for the underfire stack at Bethlehem Steel Corporation's Coke Battery No. 2 in Porter County. This EVEL is approved for as long as the SIP mass emission limit determined from 325 IAC 6–2 (October 6, 1980, submittal) for this source remains in the SIP See (c)(6), (35), and (42).

(50) On December 21, 1983, the Indiana Air Pollution Control Board submitted Indiana Rule 325 IAC 6–2.1, Particulate Emission Limitations for Sources of Indirect Heating. This rule repeals and replaces Indiana Rule 325 IAC 6–2. See §§ 52.770(c)(4) and (c)(35) and § 52.776(i).

(i) *Incorporation by reference.*

(A) 325 IAC 6–2.1, revised regulation establishing Particulate Emission Limitations for Sources of Indirect Heating.

(ii) Additional material.

(A) December 21, 1983, submittal of Finding of Facts and Recommendations of Hearing Officer R. W. James on 325 IAC 6–2.1.

(B) March 27, 1985, commitment letter from the State concerning the procedures the State will use in processing "bubbles" under 325 IAC 6–2.1–2(B) and 3(b). See § 52.776(i).

(51) On February 7, 1983, Indiana submitted revised opacity limits for existing boilers at Olin Corporation, located in Covington, Indiana. These "equivalent visible emission limits" (EVEL) are approved for as long as the SIP mass emission limit determined from 325 IAC 6–2 (October 6, 1980 submittal) for this source remains in the SIP. See § 52.770(c) (6) and (35) and § 52.776(h)(2).

(i) *Incorporation by reference.*

(A) EVELs for Olin Corporation contained in Operating Permits issued by IAPCB, dated October 6, 1981.

(ii) Additional material.

(A) September 1, 1983, transmittal by IAPCD's A. Sunderland of Olin's Mass Emission Tests, dated August 26, 1983.

(B) April 5, 1984, letter from IAPCD's E. Stresino transmitting original petition, including Method 9 opacity data.

(52) On February 23, 1984, the Indiana Air Pollution Control Board submitted a revision to Indiana's SO_2 SIP waiving the self-monitoring requirement for Public Service Indiana's Edwardsport Generating Station, as set forth in section 4(a) of Rule 325 IAC 7–1. See (c)(19). This revision becomes effective once the Edwardsport Station achieves an annual operating capacity of no greater than 10%.

(53) On October 6, 1980, Indiana submitted revised opacity regulation 325 IAC 5–1. It replaces 1972 APC 3 for process sources, approved at paragraph (b), and SIP 1974 APC 3 for combustion sources, approved in part at subparagraph (c)(14). Indiana does not intend 325 IAC 5–1 to regulate the emission points in Lake County listed in Table 2 of 325 IAC 6–1–110.2 (subparagraph (c)(57)). USEPA is disapproving 325 IAC 5–1 for these sources. Indiana does not intend 325 IAC 5–1 to regulate certain coke battery emission sources listed in 325 IAC 11–3 (subparagraph (c)(42)). USEPA is disapproving 325 IAC 5–1 as it applies to the provisions of 325 IAC 11–3 which USEPA disapproved at (c)(42), i.e., pushing and quenching sources throughout the State and coke oven doors in Lake and Marion Counties. Additionally, Indiana has modified 325 IAC 5–1 as it applies to the stack emission points in Porter County listed at 325 IAC 6–6–4. USEPA disapproved 325 IAC 5–1 as it applies to these Porter County sources on February 5, 1987 (52 FR 3640). For those source categories where USEPA is disapproving 325 IAC 5–1, they remain regulated by the previously approved opacity SIP which consists of SIP 1974 APC 3 for combustion sources and 1972 APC 3 for process sources. Additionally, as long as the Bethlehem Steel Corporation No. 2 Coke Oven Battery Underfire Stack EVEL (subparagraph (c)(49)) remains approved, it replaces 325 IAC 5–1.

(i) *Incorporation by reference.*

(A) A letter dated October 6, 1980 from the State of Indiana Air Pollution Control Board and 325 IAC 5–1, Visible Emission Limitations, State promulgated on August 26, 1980.

(ii) Additional material.

(A) February 12, 1985, letter from the Technical Secretary of the Air Pollution Control Board committing the State to make certain technical changes to 325 IAC 5–1.

(54) On March 28, 1984, Indiana submitted a revised TSP emission limitation for Richmond State Hospital, Wayne County, Indiana. This limitation replaces the one in 325 IAC 6–1–14 which was previously approved at (c)(34).

(i) *Incorporation by reference.*

(A) On January 13, 1984, Indiana issued to Richmond State Hospital an amendment to operating permit, 89–04–85–0153, which revised its TSP emission limitations for the four boilers to 0.60 lbs/MMBTU with an annual total limit of 452 tons/yr.

(55) On January 30, 1985, Indiana submitted revised VOC regulations 325 IAC 8–1.1, 8–2, 8–3, 8–4 and 8–5 to satisfy certain conditions of USEPA's approval.

Those regulations amended those approved at (c)(33) and (c)(34). In addition, the applicability of the regulations was extended to cover St. Joseph and Elkhart Counties. USEPA is taking no action on changes to 325 IAC 8–1.1–2(f), Methods of Compliance, and the repeal of 325 IAC 8–5–6, Perchloroethylene Dry Cleaning, because these exempt the compound perchloroethylene from control without the State justifying that such exemption is consistent with the Part D reasonably available control technology (RACT) requirements.

NOTE: If Indiana allows use of a non-USEPA test method in the future, its use must be submitted to USEPA as a SIP revision.

(i) *Incorporation by reference.*

(A) Indiana's Volatile Organic Compounds (VOC) RACT I and II regulations, Title 325 Air Pollution Control Board:

(*1*) 325 IAC 8–1.1, Establishes Volatile Organic Compound Emission Limitations. State promulgated on June 21, 1984, and amended November 7, 1984.

NOTE: 325 IAC 8–1.1–4 Test methods andprocedures. If Indiana allows use of a non-USEPA test method in the future, its use must be submitted to USEPA as a SIP revision.

(*2*) 325 IAC 8–2 Surface Coating Emission Limitations. State promulgated on June 21, 1984, and amended November 7, 1984.

(*3*) 325 IAC 8–3 Solvent Metal Cleaning Operating Requirements. State promulgated on October 15, 1984, and amended November 7, 1984.

(*4*) 325 IAC 8–4 Petroleum Sources. State promulgated on June 21, 1984, and amended November 7, 1984.

(*5*) 325 IAC 8–5 Miscellaneous Operations. State promulgated on June 21, 1984, and amended November 7, 1984.

(56) On September 2, 1983, the Indiana Air Pollution Control Board (Board) submitted revised emission limitations for Occidental Chemical Corporation (OCC), located in Clark County, Indiana. Amendments to these operating permits were submitted by the State on December 21, 1983. These emission limits replace those approved for OCC (under its former name, Hooker Chemical) at (c)(34).

(i) *Incorporation by reference.*

(A) Indiana Air Pollution Control Board Operation Permits:

(*1*) Control Number 16113, date issued December 27, 1982.

(*2*) Control Number 16114, date issued December 27, 1982.

(*3*) Control Number 16115, date issued December 27, 1982.

(ii) Additional material.

(A) OCC corrected emissions dated September 13, 1984.

(B) OCC's new modeled data, dated November 6, 1984.

(C) State's modeling for OCC and surrounding area, dated July 2, 1984 and August 7, 1984.

(57) On October 11, 1983, October 24, 1983, and April 16, 1984, Indiana submitted a revised Lake County Total Suspended Particulates (TSP) Plan, including regulations 325 IAC 6–1–10.2 and 6–1–11.1. This plan is disapproved. See § 52.776(j).

(58) On November 13, 1984, Indiana submitted 325 IAC 13–2, Motor Vehicle Tampering and Fuel Switching.

(i) *Incorporation by reference.*

(A) Indiana Rule 325 IAC 13–2, promulgated by the State on September 24, 1984.

(59) On March 24, 1986, the State of Indiana submitted a negative declaration for synthetic organic chemical manufacturing industry (SOCMI) source leaks and oxidation, and for natural gas/gasoline processing plants. On April 14, 1986, the State of Indiana submitted a negative declaration for manufacturers of high-density polyethylene, polypropylene, and polystyrene resins, and for large petroleum dry cleaners.

(i) *Incorporation by reference.*

(A) Letter dated March 24, 1986, from Harry D. Williams, Director, Air Pollution Control Division, Indiana State Board of Health. Letter dated April 14, 1986, from Walter J. Kulakowski, Assistant Commissioner for Air Management, Department of Environmental Management.

(60) On January 18, 1984, Indiana submitted as a revision to the TSP SIP certain operating conditions and limits for three coke oven batteries at Citizens Gas and Coke Utility in Marion

County. The operating permits included conditions and limits for Batteries E, H and Number One with respect to visible emissions from coke oven doors and pushing operations and allowable content of total dissolved solids in quench makeup water. EPA disapproves the limit on coke oven door visible emissions and total dissolved solids content for quench makeup water on Battery Number One, because the limits are inconsistent with that battery's Part C Prevention of Significant Deterioration requirements and Part D Lowest Achievable Emission Rate requirements. See subparagraphs (c)(34) and (c)(42) for further background on actions concerning coke oven batteries.

(i) *Incorporation by reference.*

(A) Certificates of Operation Numbers 06895, 06896, and 06897 for Citizens Gas and Coke Utility issued by the City of Indianapolis, dated June 30, 1980, with addition of operating conditions and emission limits, dated September 12, 1983, as adopted by the State on January 4, 1984, and transmitted on January 18, 1984.

(ii) Additional information.

(A) September 7, 1983, letter from the City of Indianapolis to the State concerning quarterly analysis of coke quenching makeup water.

(61) On October 15, 1984, Indiana submitted a revision to the Porter County total suspended particulate (TSP) plan, including regulation 325 IAC 6–6, which was promulgated by Indiana on November 7, 1984. This plan is disapproved. See § 52.776(l).

(62) On March 4, 1985, Indiana submitted a revision to the Marion County carbon monoxide (CO) plan. USEPA approved this plan based on monitoring and modeling data and a commitment to implement a one-way street pair in the Indianapolis central business district. These elements demonstrate attainment of the CO National Ambient Air Quality Standards by December 31, 1987.

(i) *Incorporation by reference.*

(A) Marion County CO plan for attainment and maintenance of the CO NAAQS from Indianapolis Air Pollution Control Division, Sections 1.0, 3.4, 4.1, 4.2, 4.3.1, 4.3.2, 4.4, 5.1, 5.5.4, 6.1, 6.2.1, 6.2.2, 6.3, and 6.4, dated November 12, 1984.

(B) Letter from Indiana forwarding Marion County CO plan to USEPA, dated March 4, 1985.

(ii) Additional material.

(A) Portion of additional technical information from Indianapolis Air Pollution Control Division, including Section 1.0, dated August 28, 1985.

(B) Letter from Indiana forwarding additional technical information, dated October 7, 1985.

(63) On January 23, 1986, the State submitted revisions to its Stage I Gasoline Dispensing regulations, which replace those conditionally approved at (c)(33), (c)(35)—Codification only, and (c)(55).

(i) *Incorporation by reference.*

(A) Letter of January 23, 1986 to EPA from the State of Indiana, and Title 325 Air Pollution Control Board Rule 325 IAC 8–4–6, Gasoline Dispensing Facilities, which was promulgated on January 14, 1986.

(B) Title 325 Air Pollution Control Board Rule 8–1.1–3, Compliance Schedules, subsections (f), (g), and (h), which was promulgated on January 14, 1986.

(64) On January 23, 1986, the State of Indiana submitted to USEPA a revision to the Indiana Lead State Implementation Plan in order to satisfy the requirements of 40 CFR 51.160 through 51.163 and 51.165(b) (formerly 40 CFR 51.18 (a) through (i) and 51.18(k)) for a new source review program, USEPA approved this revision for lead new source review only.

(i) *Incorporation by reference.*

(A) Construction and Operating Permit Requirements, 325 IAC 2–1.1 promulgated on January 8, 1986.

(B) Letter of November 17, 1987, to EPA from the Indiana Department of Environmental Management.

(65) On November 30, 1981, Indiana established its air quality surveillance network for lead. On November 21, 1983, Indiana notified USEPA that Corning Glass was shut down. On February 18, 1987, Indiana submitted its regulation to control lead emissions, 325 IAC 15–1.

(i) *Incorporation by reference.*

(A) 325 IAC 15–1, Lead Emission Limitations, effective February 27, 1987.

(B) Letter of February 18, from the State of Indiana to EPA.

(ii) Additional material.

(A) A November 30, 1981, letter from Harry Williams, Technical Secretary, Indiana Air Pollution Control Board establishing Indiana's air quality surveillance network for lead.

(B) A November 21, 1983, letter from Harry Williams, Technical Secretary, confirming that the Corning Glass facility in Wells County was permanently shut down and had been taken out of the State's emission inventory.

(C) A June 9, 1987, letter from Timothy Method, Acting Assistant Commissioner, submitting a general strategy and additional increments of progress required of Hammond Lead.

(66) On October 21, 1987, the State of Indiana submitted 325 IAC 7–1–3.1, Reporting Requirements and Methods to Determine Compliance, as a revision to its SO_2 plan. At paragraph (c)(19) of this section, USEPA approved/conditionally approved Indiana's SO_2 plan, 325 IAC 7-1, for most areas of the State. However, the emission limits in this plan were set aside by the Court of Appeals for the Seventh Circuit because USEPA took no action on the State's 30-day averaging compliance method in 325 IAC 7-1-3. New compliance method 325 IAC 7-1-3.1 replaces former 325 IAC 7-1-3. Therefore, with EPA's approval of 325 IAC 7-1-3.1, USEPA is reinstating its March 12, 1982, approval of Indiana's October 6, 1980, SO_2 rule, 325 IAC 7-1-1,7-1-2 (except for any emission limits in the below named counties), 7-1-4, 7-1-5, 7-1-6, and 7-1-7. Other than these general provisions and 325 IAC 7-1-3.1, USEPA is not acting on or approving today Indiana's SO_2 plan for Dearborn, Floyd, Gibson, Jefferson, Lake, LaPorte, Marion, Morgan, Porter, Sullivan, Vermillion, Vigo, Warrick, and Wayne Counties. Indiana recodified 325 IAC 7-1-1 through 7-1-7 to 326 IAC 7-1-1 through 7-1-7 and submitted the recodified rules on November 16, 1988.

(i) *Incorporation by reference.*

(A) 326 IAC 7-1-1 through 326 7-1-7, Sulfur Dioxide Emission Limitations, as published in the April 1, 1988, *Indiana Register* (IR) at 11 IR 2511.

(67) On February 3, 1988, Indiana submitted its SO_2 plan for Jefferson, LaPorte, Marion, Sullivan, and Wayne Counties; on March 23, 1988, it submitted its SO_2 plan for Vermillion County; and on August 1, 1988, it submitted its SO submitted the same rules in its plans for Jefferson, LaPorte, Marion, Sullivan, and Wayne Counties, as recodified into Title 326 of the Indiana Administrative Code. These plans consist of the provisions and requirements in 326nIAC 7-1 approved or reinstated for these counties at paragraph (c)(66), any SO_2 emission limits in 326 IAC 7-1-2 applicable in these counties (as incorporated by reference at (c)(66)(i)(C)), and the site-specific SO_2 emission limits and other requirements in 326 IAC 7-1-13 (Jefferson County), 326 IAC 7-1-12 (LaPorte County), 326 IAC 7-1-9 (Marion County), 326 IAC 7-1-14 (Sullivan County), 326 IAC 7-1-15 (Vermillion County), 326 IAC 7-1-10.1 (Vigo County), and 326 IAC 7-1-11 (Wayne County).

(i) *Incorporation by reference.*

(A) 326 IAC 7-1-13, Jefferson County Sulfur Dioxide Emission Limitations, as published in the April 1, 1988, *Indiana Register* (IR) at 11 IR 2526.

(B) 326 IAC 7-1-12, LaPorte County Sulfur Dioxide Emission Limitations, as published on April 1, 1988, at 11 IR 2526.

(C) 326 IAC 7-1-9, Marion County Sulfur Dioxide Emission Limitations, as published on April 1, 1988, at 11 IR 2518.

(D) 326 IAC 7-1-14, Sullivan County Sulfur Dioxide Emission Limitations, as published on April 1, 1988, at 11 IR 2526.

(E) 326 IAC 7-1-15, Vermillion County Sulfur Dioxide Emission Limitations, as published on March 1, 1988, at 11 IR 1735.

(F) 326 IAC 7-1-10.1, Vigo County Sulfur Dioxide Emission Limitations, as published on August 1, 1988, at 11 IR 3785.

(G) 325 IAC 7-1-11, Wayne County Sulfur Dioxide Emission Limitations, as published on April 1, 1988, at 11 IR 2525.

(68) On December 2, 1983, Indiana submitted its transportation control plans as an element in its ozone strategy for Lake and Porter Counties. Further information was submitted on June 10, 1986.

(i) *Incorporation by reference.* (A) Chapter 7, Mobile Source Strategies and Reductions, Sections A.1.a, 2, and 3 and Exhibits 7-1 and 7-3 of Indiana's 1982 ozone and carbon monoxide plan,

as adopted by the Indiana Air Pollution Control Board at its November 2, 1983, metting.

(B) [Reserved]

(ii) Additional material. (A) On June 10, 1986, Indiana submitted a May 23, 1986, letter from the Northwestern Indiana Regional Planning Commission discussing the Lake and Porter Counties' transportation control plans and their implementation.

(B) [Reserved]

(69) On December 2, 1983, Indiana submitted its ozone plan for Lake and Porter Counties, as adopted by the Indiana Air Pollution Control Board on November 2, 1983. On March 2, 1984, Indiana submitted as its attainment demonstration for Lake and Porter Counties, Illinois' attainment demonstration for the greater Chicago area. The greater Chicago attainment demonstration, as submitted by Indiana, and Indiana's overall ozone plan for Lake and Porter Counties is disapproved. See §§ 52.773(i) and 52.777(d). The disapproval does not affect USEPA's approval (or conditional approval) of individual parts of Indiana'a ozone plan, and they remain approved. See § 52.770(c) (20), (21), (29), (33), (38), (39), (55), (58), and (59).

(70) On February 3, 1988, and August 23, 1988, Indiana submitted its lead plans for Quemetco, Inc., in Indianapolis; Exide Corporation in Logansport; C and D Power System in Attica; and General Battery Corporation in Frankfort. This included a recodification of its former lead rule, 325 IAC 15-1 (40 CFR 52.770(c)(65)), to 326 IAC 15-1 and revisions to this rule.

(i) *Incorporation by reference.*

(A) Title 326—Air Pollution Control Board—Indiana Administrative Code (326 IAC) 15-1, Lead Emission Limitations, as published in the *Indiana Register* (IR) on April 1, 1988, at 11 IR 2564.

(B) Corrections of typographical, clerical, or spelling errors to the document printed at 11 IR 2368 (Indiana's recodified air rules, including 326 IAC 15-1), as published on August 1, 1988, at 11 IR 3921.

(71) On March 23, 1988, Indiana submitted its SO_2 plan for Morgan County; on July 12, 1988, it submitted its SO_2 plan for Floyd County, and on November 16, 1988, it submitted its SO_2 plan for Warrick County. On December 6, 1988, it submitted its Warrick County rule as published in the *Indiana Register.* These plans consist of the provisions and requirements in 326 IAC 7-1 approved or reinstated for these counties at paragraph (c)(66), and SO_2 emission limits in 326 IAC 7-1-2 applicable in these counties (as incorporated by reference at paragraph (c)(66)(i)(C) of this section), and the site-specific SO_2 emission limits and other requirements in 326 IAC 7-1-16 (Floyd County), 326 IAC 7-1-18 (Morgan County), and 326 IAC 7-1-17 (Warrick County).

(i) *Incorporation by reference.*

(A) 326 IAC 7-1-16, Floyd County Sulfur Dioxide Emission Limitations, as published in the March 1, 1988, *Indiana Register* (IR) at 11 IR 1737.

(B) 326 IAC 7-1-18, Morgan County Sulfur Dioxide Emission Limitations, as published on June 1, 1988, at 11 IR 3018.

(C) 326 IAC 7-1-17, Warrick County Sulfur Dioxide Emission Limitations, as published on December 1, 1988, at 12 IR 553.

(72) On November 16, 1988, Indiana submitted its SO_2 plan for Dearborn County; on July 12, 1988, it submitted its SO_2 plan for Gibson County; on November 16, 1988, and December 6, 1988, it submitted its SO_2 plan for Lake County, and on November 16, 1988, and December 6, 1988, it submitted its SO_2 plan for Porter County. These plans consist of the provisions and requirements in 326 IAC 7-1 approved or reinstated for these counties at paragraph (c)(66), any SO_2 emission limits in 326 IAC 7-1-2 applicable in these counties (as incorporated by reference at paragraph (c)(66)(i)(C) of this section, and the site-specific SO_2 emission limits and other requirements in 326 IAC 7-1-20 (Dearborn County), 326 IAC 7-1-8.1 (Lake County), 326 IAC 7-1-19 (Gibson County), and 326 IAC 7-1-21 (Porter County).

(i) *Incorporation by reference.*

(A) 326 IAC 7-1-20, Dearborn County Sulfur Dioxide Emission Limitations, as published in the August 1, 1988, *Indiana Register* (IR) at 11 IR 3784.

(B) 326 IAC 7-1-19, Gibson County Sulfur Dioxide Emission Limitations, as published on June 1, 1988, at 11 IR 3019.

(C) 326 IAC 7-1-8.1, Lake County Sulfur Dioxide Emission Limitations, as published on November 1, 1988, at 12 IR 262, and corrected on December 1, 1988, at 12 IR 597.

(D) 326 IAC 7-1-21, Porter County Sulfur Dioxide Emission Limitations, as published on November 1, 1988, at 12 IR 259, and corrected on December 1, 1988, at 12 IR 597.

(E) 326 IAC 7-1-1, Applicability, as published on December 1, 1988, at 12 IR 552.

(73) [Reserved]

(74) On July 23, 1987, the Indiana Department of Environmental Management submitted to USEPA a request for a site-specific revision to Indiana's ozone SIP. This revision consists of compliance date extensions until November 7, 1987, for Uniroyal's two fabric coaters and four vinyl printers at its Mishawaka plant, located in St. Joseph County, Indiana.

(i) *Incorporation by reference.*

(A) Air pollution Operation Permits Numbers: U 2 33–15A, U 2 34–23, U 2 33–14C, U 2 34–3C, U 2 33–16, U 2 33–18, Date issued December 1, 1988, and Date Expires December 1, 1990.

(75) [Reserved]

(76) On October 21, 1987, the State submitted 325 IAC 8–1.1–5, Petition for alternative controls, which gives the provisions and requirements for petitioning for reasonably available control technology volatile organic compound plans. On November 16, 1988, the State submitted this rule recodified as 326 IAC 8–1–5, Petition for site-specific reasonably available control technology (RACT) plan.

(i) *Incorporation by reference.*

(A) Title 326 Air Pollution Control Board, Indiana Administration Code (IAC) 8–1–5, Petition for site-specific reasonably available control technology (RACT) plan, as published in the April 1, 1988, *Indiana Register,* at Volume 11 IR 2530. Filed with the Secretary of State on March 10, 1988.

(77) [Reserved]

(78) On January 18, 1989, and June 23, 1989, Indiana submitted its revised lead plan for the HLP-Lead Plant of Hammond Lead Products, Inc. in Hammond Indiana. Additionally, minor changes were made to Indiana's overall lead rule, 326 IAC 15–1, Lead Emission Limitations.

(i) *Incorporation by reference.*

(A) Title 326—Air Pollution Control Board—Indiana Administrative Code (326 IAC) 15–1, as published in the Indiana Register (IR) on July 1, 1989, at 1850. This rule was effective for State purposes on July 14, 1989.

(79) [Reserved]

(80) On October 15, 1987, the State submitted 325 IAC 8–2–13, Wood Furniture and Cabinet Coating, as a portion of its 1982 ozone plan, which gives provisions and requirements for controlling volatile organic compound (VOC) emissions from sources located in Clark, Floyd, Lake and Porter Counties. On November 16, 1988, the State submitted this rule recodified as 326 IAC 8–2–12, Wood Furniture and Cabinet Coating.

(i) *Incorporation by reference.*

(A) Title 326 Air Pollution Control Board, Indiana Administrative Code (IAC) 8–2–1, Applicability of rule; and 326 IAC 8–2–12, Wood furniture and cabinet coating, as published in the April 1, 1988, "Indiana Register" (IR), at 11 IR 2536 and corrected on March 1, 1989, at 12 IR 1394. Filed with the Secretary of State on March 10, 1988.

(81) On April 11, 1988, the State submitted, as a portion of its 1982 ozone plan, rules to control volatile organic compound (VOC) emissions in Lake and Porter Counties. These rules consist of the provisions and requirements in 326 IAC 14–1, General Provisions; 326 IAC 14–8, Emission Standards for Equipment Leaks; and 326 IAC 14–9, Emission Limitations for Benzene from Furnace Coke Oven By-product Recovery Plants.

(i) *Incorporation by reference.*

(A) Amendments to title 326, Air Pollution Control Board, Indiana Administrative Code (IAC) 14–1 General Provisions; 326 IAC 14–8 Emission Standards for Equipment Leaks; (Fugitive Emission Sources); and 326 IAC 14–9 Emission Limitations for Benzene from Furnace Coke Oven By-Product Recovery Plants, as published in the June 1, 1988, Indiana Register (IR) at 11 IR 3011. Filed with the Secretary of State on April 13, 1988.

(82) [Reserved]

(83) On January 21, 1981, the State submitted its revised Malfunctions Rule 325 IAC 1.1–5. On November 16, 1988, Indiana submitted its recodified regulations. This rule was renumbered 326 IAC 1–6, Malfunctions.

(i) *Incorporation by reference.* (A) Title 326 of the Indiana Administrative Code (IAC), Rule 326 IAC 1–6: Malfunctions as published in the April 1, 1988, Indiana Register (IR) at 11 IR 2380. Filed with the Secretary of State on March 10, 1988.

(ii) Additional materials. (A) On July 2, 1982, the State submitted clarifications of its intent for 325 IAC 1.1–5.

(84) On October 27, 1989, and January 19, 1990, Indiana submitted its vehicle inspection and maintenance plan for Clark, Floyd, Lake, and Porter Counties.

(i) *Incorporation by reference.* (A) Title 326, Air Pollution Control Board, of the Indiana Administrative Code (IAC), Rule 13–1, Motor Vehicle Inspection and Maintenance Requirements, Adopted at 13 Indiana Register 500, effective January l, 1990.

(85) On December 2, 1983, Indiana submitted its transportation control plan for Clark and Floyd Counties as one element in its ozone plan for the area. Additional material was submitted on May 14, 1986.

(i) *Incorporation by reference.* (A) Chapter 7, Mobile Source Strategies and Reductions, sections A.1.b and exhibits 7–2 and 7–4, as adopted by the Indiana Air Pollution Control Board at its November 2, 1983, meeting.

(ii) *Additional material.* (A) On May 14, 1986, Indiana submitted an April 23, 1986, Letter from Jim Thorne, Transportation Director, Kentuckiana Regional Planning and Development Agency, discussing the Clark and Floyd Counties portion of the Louisville, Kentucky transportation control plan.

(86) On February 15, 1990, Indiana submitted an amended rule which updates the applicable edition of the Code of Federal Regulations from the 1987 edition to the 1988 edition.

(i) *Incorporation by reference.* (A) Title 326, Air Pollution Control Board, Indiana Administrative Code (IAC) 1–1–3, References to the Code of Federal Regulations, as published in the February 1, 1990, Indiana Register (IR), Volume 13 at IR 867. Filed with the Secretary of State on December 14, 1989.

(87) On October 23, 1990, and August 19, 1991, the Indiana Department of Environmental Management submitted regulations adopted by the Indiana Air Pollution Control Board as part of title 326 of the Indiana Administrative Code and intended incorporation to the Indiana ozone plan as part of the stationary source control strategy.

(i) *Incorporation by reference.*

(A) The following volatile organic compound rules adopted by the Indiana Air Pollution Control Board as part of title 326 of the Indiana Administrative Code (326 IAC) and intended to partially satisfy the requirements of the Clean Air Act.

(*1*) Effective October 23, 1988: 326 IAC 8–1–.05 Coating Definition, 326 IAC 8–2–11 Fabric and Vinyl Coating.

(*2*) Effective February 15, 1990: 326 IAC 1–2–48 Non-Photochemically Reactive Hydrocarbon Defined; 326 IAC 8–2–5 Paper Coating Operations.

(*3*) Effective May 18, 1990: 326 IAC 1–2–18.5 Cold Cleaner Degreaser Defined; 326 IAC 1–2–21.5 Conveyorized Degreaser Defined; 326 IAC 1–2–29.5 Freeboard Height Defined; 326 IAC 1–2–29.6 Freeboard Ratio Defined; 326 IAC 1–2–49.5 Open Top Vapor Degreaser Defined; 326 IAC 8–2–9 Miscellaneous Metal Coating Operations; 326 IAC 8–3–1 Organic Solvent Degreasing Operations; 326 IAC 8–5–3 Synthesized Pharmaceutical Manufacturing Operations; 326 IAC 8–5–5 Graphic Arts Operations.

(*4*) Effective June 8, 1990: 326 IAC 8–1–2 Compliance Methods; 326 IAC 1–2–90 Volatile Organic Compound (VOC) Definition; 326 IAC 8–1–4 Testing Procedures.

(*5*) Effective June 5, 1991: 326 IAC 1–2–14 Coating Line Definition; 326 IAC 8–1–1 Applicability of Rule; 326 IAC 8–1–2 Compliance Methods; 326 IAC 8–1–4 Testing Procedures; 326 IAC 8–2–1 Applicability; 326 IAC 8–3–5 Cold Cleaner Degreaser Operation and Control; 326 IAC 8–3–6 Open Top Vapor Degreaser Operation and Control Requirements; 326 IAC 8–3–7 Conveyorized Degreaser Operation and Control; 326 IAC 8–4–8 Leaks from Petroleum Refineries, Monitoring, Reports; 326 IAC 8–5–5 Graphic Arts Operations.

(88) On February 15, 1990, the Indiana Department of Environmental Management submitted a request to revise the Indiana State Implementation Plan by adding a site specific particulate matter revision for Navistar International Transportation Corporation (Navistar) gray iron foundry and engine plant in Indianapolis, Indiana.

(i) *Incorporation by reference.*

(A) Title 326 Air Pollution Control Board, Indiana Administrative Code (IAC) 6–1–12 as amended, effective January 13, 1990.

(89) On July 22, 1991, as supplemented on April 18, 1994, the State submitted regulations adopted by the Indiana Air Pollution Control Board as part of Title 326 of the Indiana Administrative Code for incorporation into the Indiana sulfur dioxide State Implementation Plan.

(i) *Incorporation by reference.*

(A) 326 Indiana Administrative Code 7–4–12.1: Gibson County sulfur dioxide emission limitations; effective December 5, 1990. Published in the *Indiana Register*, Volume 14, Number 3, December 1, 1990.

(90) On March 3, 1989, the Indiana Department of Environmental Management submitted a request to revise the Indiana State Implementation Plan (SIP) by adding an emission trade or bubble for Joseph E. Seagram and Sons which is located in Lawrenceburg, Indiana. This requested SIP revision repeals rule 326 Indiana Administrative Code (IAC) 6–1–8, adds a new Section, 326 IAC 6–1–8.1, and amends 326 IAC 6–1–7 to include a reference for the new Section and a recodification of the applicable rule.

(i) *Incorporation by reference.* (A) Title 326 IAC 6–1–7 as published in the Indiana Register Volume 12, Number 6, March 1, 1989, effective April 9, 1989.

(B) Title 326, IAC 6–1–8.1, repeal of 326 IAC 6–1–8 as published in the Indiana Register, Volume 12, Number 6, March 1, 1989, effective March 1, 1989.

(91) On January 6, 1994, the State of Indiana submitted a requested revision to the Indiana State Implementation Plan (SIP) intended to satisfy the requirements of section 182(a)(3)(B) of the Clean Air Act as amended in 1990. Included were State rules establishing procedures for the annual reporting of emissions of volatile organic material (VOM) and oxides of nitrogen (NOx) as well as other regulated air pollutants by stationary sources in ozone nonattainment areas.

(i) *Incorporation by reference.*

(A) Title 326 of the Indiana Administrative Code (326 IAC) 2–6 which was adopted by the Indiana Air Pollution Control Board, effective December 13, 1993.

(92) On February 25, 1994, Indiana submitted an employee commute option rule intended to satisfy the requirements of section 182(d)(1)(B) of the Clean Air Act Amendments of 1990.

(i) *Incorporation by reference.* (A) Title 326 of the Indiana Administrative Code, Article 19 MOBILE SOURCE RULES, Rule 1, Employee Commute Options. Filed with the Secretary of State, October 28, 1993, effective November 29, 1993. Published at Indiana Register, Volume 17, Number 3, December 1, 1993.

(93) On February 25, 1994, the Indiana Department of Environmental Management requested a revision to the Indiana State Implementation Plan in the form of Stage II Vapor Recovery Rules as amendments to Title 326 of the Indiana Administrative Code (326 IAC) 8–1–0.5 and 8–4–6.

(i) *Incorporation by reference.*

(A) 326 IAC 8–1–0.5 Definitions and 8–4–6 Gasoline dispensing facilities. Filed with the Secretary of State October 28, 1993, effective November 29, 1993. Published at Indiana Register, Volume 17, Number 3, December 1, 1993.

(94) On February 25, 1994, Indiana requested a revision to the State Implementation Plan (SIP) in the form of amendments to Title 326: Air Pollution Control Board of the Indiana Administrative Code (326 IAC) 2–1–1 and 2–1–3 which were intended to satisfy the additional new source review requirements of the Clean Air Act Amendments of 1990. The USEPA, at this time, is also approving the incorporation of permitting rules Recodified as Article 2. Permit Review Rules of 326 IAC into the SIP to replace APC 19 which was incorporated into the Indiana SIP at 40 CFR 52.770 (c)(24).

(i) *Incorporation by reference.*

(A) Amendments to Title 326 IAC 2–1–1, 2–1–2, 2–1–3, 2–3–1, 2–3–2, 2–3–3, and 2–3–5. Filed with the Secretary of State

November 12, 1993, effective December 13, 1993.

(B) Amendments to Title 326 IAC 2–1–4, 2–1–5, 2–1–6, 2–1–7, 2–1–9, 2–1–10, 2–1–11, 2–1–12, 2–1–13, 2–3–4. Filed with the Secretary of State March 10, 1988, effective April 9, 1988.

(95) On May 22, 1994, the Indiana Department of Environmental Management submitted a request to revise the Indiana State Implementation Plan by adding a lead plan for Marion County which consists of a source specific revision to Title 326 of the Indiana Administrative Code (326 IAC) for Refined Metals.

(i) *Incorporation by reference.*

(A) Amendments to 326 IAC 15–1–2 Source-specific provisions. Filed with the Secretary of State March 25, 1994. Effective April 24, 1994. Published at Indiana Register, Volume 17, Number 8, May 1, 1994.

(96) On August 3, 1994 and February 6, 1995, the Indiana Department of Environmental Management submitted a requested SIP revision to the ozone plan for ozone nonattainment areas.

(i) *Incorporation by reference.*

(A) Indiana Administrative Code, Title 326: Air Pollution Control Board, Article 1: General Provisions, Rule 2: Definitions, Section 22.5 "Department" definition, Section 28.5 "Federally enforceable" definition, and Section 64.1 "Reasonably available control technology" or "RACT" definition. Added at 18 *Indiana Register* 1223–4, effective January 21, 1995.

(B) Indiana Administrative Code, Title 326: Air Pollution Control Board, Article 8: Volatile Organic Compound Rules, Rule 7: Specific VOC Reduction Requirements for Lake, Porter, Clark, and Floyd Counties. Added at 18 *Indiana Register* 1224–9, effective January 21, 1995.

(97) On October 25, 1994, the Indiana Department of Environmental Management requested a revision to the Indiana State Implementation Plan in the form of revisions to State Operating Permit Rules intended to satisfy Federal requirements for issuing federally enforceable State operating permits (FESOP) and thereby exempt certain small emission sources from review under the State's title V operating permit program. This FESOP rule is also approved for the purpose of providing federally enforceable emissions limits on hazardous air pollutants listed under section 112(b) of the Clean Air Act. This revision took the form of an amendment to Title 326: Air Pollution Control Board of the Indiana Administrative Code (326 IAC) 2–8 Federally Enforceable State Operating Permit Program.

(i) *Incorporation by reference.* 326 IAC 2–8 Federally Enforceable State Operating Permit Program. Sections 1 through 17. Filed with the Secretary of State May 25, 1994. Effective June 24, 1994. Published at Indiana Register, Volume 17, Number 10, July 1, 1994.

(98) On October 25, 1994, the Indiana Department of Environmental Management requested a revision to the Indiana State Implementation Plan in the form of revisions to State Operating Permit Rules intended to allow State permitting authorities the option of integrating requirements determined during preconstruction permit review with those required under title V. The State's Enhanced New Source Review provisions are codified at Title 326: Air Pollution Control Board (326 IAC) 2–1–3.2 Enhanced New Source Review.

(i) *Incorporation by reference.* 326 IAC 2–1–3.2 Enhanced new source review. Filed with the Secretary of State May 25, 1994. Effective June 24, 1994. Published at Indiana Register, Volume 17, Number 10, July 1, 1994.

(99) On June 16, 1993, December 9, 1993, September 8, 1994, and November 17, 1994, Indiana submitted a part D particulate matter (PM) nonattainment area plan for the Lake County moderate nonattainment area.

(i) *Incorporation by reference.*

(A) Indiana Administrative Code Title 326: Air Pollution Control Board, Article 1: General Provisions, Rule 2: Definitions, Section 32.1: "Gooseneck cap" definition, Section 34.1: "Jumper pipe" definition, Section 62.1: "Quench car" definition, Section 63.1: "Quench reservoir" definition, and Section 63.2: "Quench tower" definition. Added at 16 *Indiana Register* 2363, effective June 11, 1993.

(B) Indiana Administrative Code Title 326: Air Pollution Control Board, Article 5: Opacity Regulations, Rule 1:

Opacity Limitations, Section 1: Applicability of rule, Section 2: Visible emissions limitations, Section 3: Temporary exemptions, Section 4: Compliance determination, Section 5: Violations, and Section 7: State implementation plan revisions. Amended at 16 *Indiana Register* 2363, effective June 11, 1993.

(C) Indiana Administrative Code Title 326: Air Pollution Control Board, Article 6: Particulate Rules, Rule 1: Nonattainment Area Limitations, Opacity Limitations, Section 10.1: Lake County PM10 emissions requirements (subsections a through k), Section 10.2: Lake County PM10 coke battery emissions requirements, and Section 11.1: Lake County fugitive particulate matter control requirements. Added at 16 *Indiana Register* 2363, effective June 11, 1993.

(D) Indiana Administrative Code Title 326: Air Pollution Control Board, Article 11: Emissions Limitations for Specific Types of Operations, Rule 3: Coke Oven Batteries, Section 2: Emissions limitations (subsections a through f, and i), and Section 4: Compliance determination. Amended at 16 *Indiana Register* 2363, effective June 11, 1993.

(100) On August 25, 1995, Indiana submitted a regulation which bans residential open burning in Clark, Floyd, Lake, and Porter Counties in Indiana. The regulation allows residential open burning, with certain restrictions, in other parts of the State, and describes other types of open burning which are allowed in Indiana.

(i) *Incorporation by reference.*

(A) Indiana Administrative Code Title 326: Air Pollution Control Board, Article 4: Burning Regulations, Rule 1: Open Burning, Section 3: Exemptions. Added at 18 In. Reg. 2408 Effective June 23, 1995.

(101) On August 25, 1995, Indiana submitted a regulation which reduced the maximum allowable volatility for gasoline sold in Clark and Floyd Counties to 7.8 psi during the summer control period. The summer control period is June 1, to September 15, for retail outlets and wholesale customers, and May 1, to September 15, for all others.

(i) *Incorporation by reference.* 326 Indiana Administrative Code 13–3 Control of Gasoline Reid Vapor Pressure. Sections 1 through 7. Finally adopted by the Indiana Air Pollution Control Board January 11, 1995. Signed by the Secretary of State July 6, 1995. Effective August 5, 1995. Published at Indiana Register, Volume 18, Number 11, August 1, 1995.

(102) On June 6, 1995, and on September 28, 1995 the Indiana Department of Environmental Management submitted State Implementation Plan (SIP) revisions establishing an enhanced inspection and maintenance (I/M) program in accordance with the requirements of the Clean Air Act as amended in 1990. The new enhanced I/M program replaces the basic I/M programs in operation in Lake, Porter, Clark, and Floyd Counties. The Air Pollution Control Board adopted new rule 326 IAC 13–1.1 and repealed existing 326 IAC 13–1, thereby putting in place a revised I/M program.

(i) *Incorporation by reference.*

(A) 326 Indiana Administrative Code 13–1.1 adopted April 5, 1995, effective October 1, 1995.

(ii) Other material.

(A) June 6, 1995 letter and enclosures from the Indiana Department of Environmental Management (IDEM) Commissioner to the Regional Administrator of the United States Environmental Protection Agency (USEPA) submitting Indiana's revision to the ozone State Implementation Plan (SIP).

(B) September 28, 1995 letter and enclosures from the IDEM Assistant Commissioner to the Regional Administrator of USEPA submitting supplemental vehicle inspection and maintenance SIP revision information and documentation.

(103) On August 25, 1995, the State submitted regulations adopted by the Indiana Air Pollution Control Board as part of title 326 of the Indiana Administrative Code for incorporation into the Indiana sulfur dioxide State Implementation Plan.

(i) *Incorporation by reference.*

(A) 326 Indiana Administrative Code 7–4–13(3); Dearborn County sulfur dioxide emission limitations; effective May 18, 1995. Published in the *Indiana Register,* Volume 18, Number 9, June 1, 1995.

(104) On December 20, 1995, and February 14, 1996, Indiana submitted a Clean-Fuel Fleet Program for Lake and Porter Counties as a revision to the State Implementation Plan.

(i) *Incorporation by reference.* 326 Indiana Administrative Code 19–3 Clean Fuel Fleet Vehicles, Sections 1 through 7. Adopted by the Indiana Air Pollution Control Board October 4, 1995. Signed by the Secretary of State December 19, 1995. Effective January 18, 1996. Published at Indiana Register, Volume 19, Number 5, February 1, 1996.

(105) On October 25, 1994, the Indiana Department of Environmental Management submitted a requested revision to the Indiana State Implementation Plan in the form of Source Specific Operating Agreement (SSOA) regulations. The SSOA regulations are intended to limit the potential to emit for a source to below the threshold level of Title V of the Clean Air Act. This revision took the form of an amendment to title 326: Air Pollution Control Board of the Indiana Administrative Code (326 IAC) 2–9–1, 2–9–2(a), 2–9–2(b), and 2–9–2(e) Source Specific Operating Agreement Program.

(i) *Incorporation by reference.* 326 Indiana Administrative Code 2–9. Sections 1, 2(a), 2(b), and 2(e). Adopted by the Indiana Air Pollution Control Board March 10, 1994. Signed by the Secretary of State May 25, 1994. Effective June 24, 1994. Published at Indiana Register, Volume 17, Number 10, July 1, 1994.

(106) On September 19, 1995, and November 8, 1995, Indiana submitted automobile and mobile equipment refinishing rules for Clark, Floyd, Lake, and Porter Counties as a revision to the State Implementation Plan. This rule requires suppliers and refinishers to meet volatile organic compound content limits or equivalent control measures for coatings used in automobile and mobile equipment refinishing operations in the four counties, as well as establishing certain coating applicator and equipment cleaning requirements.

(i) *Incorporation by reference.* 326 Indiana Administrative Code 8–10: Automobile refinishing, Section 1: Applicability, Section 2: Definitions, Section 3: Requirements, Section 4: Means to limit volatile organic compound emissions, Section 5: Work practice standards, Section 6: Compliance procedures, Section 7: Test procedures, Section 8: Control system operation, maintenance, and monitoring, and Section 9: Record keeping and reporting. Adopted by the Indiana Air Pollution Control Board June 7, 1995. Filed with the Secretary of State October 3, 1995. Published at Indiana Register, Volume 19, Number 2, November 1, 1995. Effective November 2, 1995.

(107) On August 8, 1995, Indiana submitted a site specific SIP revision request for Richmond Power and Light in Wayne County Indiana. The submitted revisions provide for revised particulate matter and opacity limitations on the number 1 and number 2 coal fired boilers at Richmond Power and Light's Whitewater Generating Station. The revisions also allow for time weighted averaging of stack test results at Richmond Power and Light to account for soot blowing. Indiana is making revisions to 326 IAC 3–2–1, which currently allows Indiana to authorize alternative emission test methods for Richmond Power and Light. Until the rule is revised to remove this authority, and approved by the United States Environmental Protection Agency, no alternate emission test method, changes in test procedures or alternate operating load levels during testing is to be granted to Richmond Power and Light.

(i) *Incorporation by reference.* Indiana Administrative Code Title 326: Air Pollution Control Board, Article 3: Monitoring Requirements, Rule 2.1: Source Sampling Procedures, Section 5: Specific Testing Procedures; Particulate Matter; Sulfur Dioxide; Nitrogen Oxides; Volatile Organic Compounds; Article 5: Opacity Regulations, Rule 1: Opacity Limitations, Section 2: Visible Emission Limitations; and Article 6: Particulate Rules, Rule 1: Nonattainment Area Limitations, Section 14: Wayne County. Added at 18 In. Reg. 2725. Effective July 15, 1995.

(ii) Additional Information. (A) August 8, 1995 letter from the Indiana Department of Environmental Management to USEPA Region 5 regarding submittal of a state implementation plan revision for Richmond Power and Light.

(108) On August 29, 1995, Indiana submitted a site specific SIP revision request for Allison Engine Company in Marion County, Indiana. The revision provides limits of 0 tons per year for boilers 2 and 11, which have shut down. The hourly mass limits remain unchanged at 0.337 pounds per million British Thermal Units (lbs/MMBTU) for boilers 1–4 of plant 5, 0.15 lbs/MMBTU for boilers 3–6 of plant 8, and 0.15 lbs/MMBTU for boilers 7–10 of plant 8. The rule provides for a combined limit of 130.0 tons per year for the boilers mentioned above, as well as new limits on the types and amounts of fuel which may be burned at the boilers, and a recordkeeping requirement to document compliance.

(i) *Incorporation by reference.* Indiana Administrative Code Title 326: Air Pollution Control Board, Article 6: Particulate Rules, Rule 1: Nonattainment Area Limitations, Section 12: Marion County. Added at 19 In. Reg. 186. Effective November 3, 1995.

(109) On October 25, 1994, and April 29, 1997, the Indiana Department of Environmental Management requested a revision to the Indiana State Implementation Plan in the form of revisions to the General Provisions and Permit Review Rules intended to update and add regulations which have been effected by recent SIP revisions, and to change regulations for streamlining purposes. This revision took the form of an amendment to Title 326: Air Pollution Control Board of the Indiana Administrative Code (326 IAC) 1–1 Provisions Applicable Throughout Title 326, 1–2 Definitions, 1–6 Malfunctions, 2–1 Construction and Operating Permit Requirements.

(i) *Incorporation by reference.* 326 IAC 1–1–2 and 1–1–3. 326 IAC 1–2–2, 1–2–4, 1–2–12, 1–2–33.1, and 1–2–33.2. 326 IAC 1–6–1. 326 IAC 2–1–1, 2–1–3, and 2–1–10. Adopted by the Indiana Air Pollution Control Board March 10, 1994. Filed with the Secretary of State May 25, 1994. Effective June 24, 1994. Published at Indiana Register, Volume 17, Number 10, July 1, 1994.

(110) On November 21, 1995, and February 14, 1996, Indiana submitted Municipal Solid Waste (MSW) Landfill rules for Clark, Floyd, Lake, and Porter Counties as a revision to the State Implementation Plan. This rule requires MSW landfills that emit greater than fifty-five tons per day of nonmethane organic compound, or that have a minimum design capacity of one hundred eleven thousand tons (one hundred thousand megagrams) of solid waste, to install a landfill gas collection and control system that either incinerates the gas or recovers the gas for energy use.

(i) *Incorporation by reference.* 326 Indiana Administrative Code 8–8 Municipal Solid Waste Landfills, Section 1 Applicability, Section 2 Definitions, Section 3 Requirements; incorporation by reference of federal standards, Section 4 Compliance deadlines. Adopted by the Indiana Air Pollution Control Board July 12, 1995. Filed with the Secretary of State December 19, 1995. Published at Indiana Register, Volume 19, Number 5, February 1, 1996. Effective January 18, 1996.

(111) On November 21, 1995, and February 14, 1996, Indiana submitted a rule for the control of volatile organic compound emissions from volatile organic liquid storage operations in Clark, Floyd, Lake, and Porter Counties.

(i) *Incorporation by reference.* 326 Indiana Administrative Code 8–9: Volatile Organic Liquid Storage Vessels, Section 1: Applicability, Section 2: Exemptions, Section 3: Definitions, Section 4: Standards, Section 5: Testing and procedures, Section 6: Record keeping and reporting requirements. Adopted by the Indiana Air Pollution Control Board May 3, 1995. Filed with the Secretary of State December 19, 1995. Published at Indiana Register, Volume 19, Number 5, February 1, 1996. Effective January 18, 1996.

(112) [Reserved]

(113) On February 13, 1996, and June 27, 1996, Indiana submitted rules for the control of volatile organic compound emissions from shipbuilding and ship repair operations in Clark, Floyd, Lake, and Porter Counties as a revision to the State Implementation Plan.

(i) *Incorporation by reference.* 326 Indiana Administrative Code 8–12: Shipbuilding or Ship Repair operations in Clark, Floyd, Lake, and Porter Counties, Section 1: Applicability, Section 2: Exemptions, Section 3: Definitions, Section 4: Volatile organic compound

emissions limiting requirements, Section 5: Compliance requirements, Section 6: Test methods and procedures, and Section 7: Record keeping, notification, and reporting requirements. Adopted by the Indiana Air Pollution Control Board September 6, 1995. Filed with the Secretary of State April 1, 1996. Published at Indiana Register, Volume 19, Number 8, May 1, 1996. Effective May 1, 1996.

(114) On November 21, 1995, and February 14, 1996, Indiana submitted regulations for wood furniture coating operations in Clark, Floyd, Lake, and Porter Counties as a revision to the State Implementation Plan for ozone.

(i) *Incorporation by reference.* 326 Indiana Administrative Code 8–11 Wood Furniture Coatings, Section 1 Applicability, Section 2 Definitions, Section 3 Emission limits, Section 4 Work practice standards, Section 5 Continuous compliance plan, Section 6 Compliance procedures and monitoring requirements, Section 7 Test procedures, Section 8 Recordkeeping requirements, Section 9 Reporting requirements, Section 10 Provisions for sources electing to use emission averaging. Adopted by the Indiana Air Pollution Control Board May 3, 1995. Filed with the Secretary of State December 5, 1996. Published at Indiana Register, Volume 19, Number 5, February 1, 1996. Effective January 4, 1996.

(115) [Reserved]

(116) On September 20, 1996 the Indiana Department of Environmental Management submitted a request to revise the Indiana State Implementation Plan by adding parachlorobenzotrifluoride (PCBTF), cyclic, branched or linear completely methylated siloxanes and acetone to the definition of "nonphotochemically reactive hydrocarbon," and by deleting "vegetable oil" from a list of compounds not considered to be volatile organic compounds (VOC) from the definition of VOC (thus including "vegetable oil" as a "VOC").

(i) *Incorporation by reference.*

(A) 326 IAC 1–2–48 "nonphotochemically reactive hydrocarbon". Sections 48(a)(22) "parachlorobenzotrifluoride" and (23) "cyclic, branched, or linear completely methylated siloxanes." 326 IAC 1–2–90 "volatile organic compound (VOC)" definition. Section 90. Published in Indiana Register, Volume 19, Number 1, October 1, 1995, page 29. Filed with the Secretary of State September 5, 1995, effective October 5, 1995.

(B) 326 IAC 1–2–48 "nonphotochemically reactive hydrocarbon." Section 48(a)(24) "acetone" (CAS Number 67–64–1). Published in Indiana Register, Volume 19, Number 10, July 1, 1996, page 2856. Filed with the Secretary of State, May 13, 1996, effective June 12, 1996.

(117) [Reserved]

(118) On July 12, 1995, Indiana submitted as a revision to the State Implementation Plan construction permits CP 019–2110, CP 019–2696, and CP 019–4362, issued under Indiana rule 326 IAC 2–1. The permits establish volatile organic compound control requirements for Rhodes Incorporated's heatset web offset printing presses.

(i) *Incorporation by reference.* Construction Permit CP 019–2110, issued and effective October 15, 1991; Construction Permit CP 019–2696, issued and effective December 18, 1992; Construction permit CP 019–4362, issued and effective April 21, 1995.

(119) Approval—On October 2, 1996, the State of Indiana submitted a State Implementation Plan revision request to eliminate references to total suspended particulates (TSP) while maintaining the existing opacity requirements. The SIP revision became effective July 19, 1996. The SIP revision request satisfies all applicable requirements of the Clean Air Act.

(i) *Incorporation by reference.* 326 Indiana Administrative Code 5–1: Opacity Limitations, Section 1: Applicability of Rule, Section 2: Visible emission limitations. Adopted by the Indiana Air Pollution Control Board April 3, 1996. Filed with the Secretary of State June 19, 1996. Published at the Indiana Register, Volume 19, Number 11, August 1, 1996 (19 IR 3049). Effective July 19, 1996.

(120) On August 26, 1996, Indiana submitted a rule requiring an oxides of nitrogen (NO_X) reasonably available control technology (RACT) rule for the Clark and Floyd Counties moderate ozone nonattainment area as a revision to the State Implementation Plan.

(i) *Incorporation by reference.* 326 Indiana Administrative Code 10: Nitrogen Oxides Rules. Rule 1: Nitrogen Oxides Control in Clark and Floyd Counties. Section 1: Applicability, Section 2: Definitions, Section 3: Requirements, Section 4: Emission limits, Section 5: Compliance procedures, Section 6: Emissions monitoring, and Section 7: Certification, record keeping, and reports. Adopted by the Indiana Air Pollution Control Board February 7, 1996. Filed with the Secretary of State May 13, 1996. Published at Indiana Register, Volume 19, Number 10, July 1, 1996. Effective June 12, 1996.

(121) On January 23, 1997, the Indiana Department of Environmental Management submitted a revision to the State Implementation Plan (SIP) for the general conformity rules. The general conformity SIP revision enables the State of Indiana to implement and enforce the Federal general conformity requirements in the nonattainment and maintenance areas at the State and local level in accordance with 40 CFR part 51, subpart W—Determining Conformity of General Federal Actions to State or Federal Implementation Plans.

(i) *Incorporation by reference.* 326 Indiana Administrative Code 16–3: General Conformity, Section 1: Applicability; incorporation by reference of Federal standards. Adopted by the Indiana Air Pollution Control Board April 3, 1996. Filed with the Secretary of State June 6, 1996. Published at the Indiana Register, Volume 19, Number 11, August 1, 1996 (19 IR 3050). Effective July 6, 1996.

(122) On July 24, 1997, Indiana submitted rules requiring record keeping and reporting requirements for graphic arts sources of volatile organic compounds and amended source applicability requirements for graphic arts sources located in Lake and Porter Counties as a revision to the State Implementation Plan.

(i) *Incorporation by reference.*

(A) 326 IAC 8–1–9 General record keeping and reporting requirements. 326 IAC 8–1–10 Compliance certification, record keeping, and reporting requirements for certain coating facilities using compliant coatings. 326 IAC 8–1–11 Compliance certification, record keeping, and reporting requirements for certain coating facilities using daily weighted averaging. 326 IAC 8–1–12 Compliance certification, record keeping, and reporting requirements for certain coating facilities using control devices. Adopted by the Indiana Air Pollution Control Board November 6, 1996. Filed with the Secretary of State April 22, 1997. Published at Indiana Register, Volume 20, Number 9, June 1, 1997. Effective May 22, 1997.

(B) 326 IAC 8–5–5 Graphic arts operations. Adopted by the Indiana Air Pollution Control Board November 6, 1996. Filed with the Secretary of State April 22, 1997. Published at Indiana Register, Volume 20, Number 9, June 1, 1997. Effective May 22, 1997.

(123) On July 9, 1997, Indiana submitted a site specific SIP revision request for the University of Notre Dame in Saint Joseph County, Indiana. The submitted revision amends 326 IAC 6–1–18, and provides for revised particulate matter and heat input limitations on the five boilers at Notre Dame's power plant.

(i) *Incorporation by reference.* Indiana Administrative Code Title 326: Air Pollution Control Board, Article 6: Particulate Rules, Rule 1: Nonattainment Area Limitations, Section 18: St. Joseph County. Added at 20 In. Reg. 2299. Effective May 22, 1997.

(124) On February 3, 1999, and May 17, 2000, Indiana submitted revised particulate matter emissions regulations for Allison Transmission in Marion County, Indiana. The submittal amends 326 IAC 6–1–12, and includes the combination of annual emissions limits for 5 boilers into one overall limit as well as new recordkeeping requirements.

(i) *Incorporation by reference.*

Emissions limits and recordkeeping requirements for Allison Transmission in Marion County contained in Indiana Administrative Code Title 326: Air Pollution Control Board, Article 6: Particulate Rules, Rule 1: Nonattainment Area Limitations, Section 12: Marion County. Added at 22 In. Reg. 416. Effective October 16, 1998.

(125) On April 6, 1999, Indiana submitted amended rules for the control of volatile organic compound emissions from vehicle refueling in Clark, Floyd, Lake, and Porter Counties as a revision to the State Implementation Plan.

(i) Incorporation by reference.

326 Indiana Administrative Code 8–1: General Provisions, Section 0.5: Definitions and 326 Indiana Administrative Code 8–4: Petroleum Sources, Section 6: Gasoline Dispensing Facilities. Adopted by the Indiana Air Pollution Control Board May 3, 1995. Filed with the Secretary of State September 18, 1995. Published at Indiana Register, Volume 19, Number 2, November 1, 1995. Effective October 18, 1995.

(126) On August 18, 1999, Indiana submitted amendments to the State's automobile refinishing rule for Lake, Porter, Clark, and Floyd Counties.

(i) *Incorporation by reference.*

326 Indiana Administrative Code 8–10: Automobile Refinishing, Section 1: Applicability, Section 5: Work practice standards, Section 6: Compliance procedures, Section 9: Recordkeeping and reporting. Adopted by the Indiana Air Pollution Control Board February 4, 1998. Filed with the Secretary of State July 14, 1998. Published at Indiana Register, Volume 21, Number 12, page 4518, September 1, 1998. Effective August 13, 1998.

(127) On August 18, 1999, Indiana submitted rules for controlling Volatile Organic Compound (VOC) emissions in Vanderburgh County. The rules contain control requirements for Stage I gasoline vapor recovery equipment, and a requirement for automobile refinishers to use special coating application equipment (automobile refinishing spray guns) to reduce VOC.

(i) *Incorporation by reference.*

(A) 326 Indiana Administrative Code 8–4: Petroleum Sources, Section 1: Applicability, Subsection (c). Adopted by the Indiana Air Pollution Control Board November 4, 1998. Filed with the Secretary of State April 23, 1999. Published at Indiana Register, Volume 22, Number 9, June 1, 1999. Effective May 23, 1999.

(B) 326 Indiana Administrative Code 8–10: Automobile Refinishing, Section 1: Applicability, Section 3: Requirements. Adopted by the Indiana Air Pollution Control Board November 4, 1998. Filed with the Secretary of State April 23, 1999. Published at Indiana Register, Volume 22, Number 9, June 1, 1999. Effective May 23, 1999.

(128) [Reserved]

(129) On May 18, 1999, the Indiana Department of Environmental Management submitted revised site-specific lead emission limits for Hammond Group—Halstab Division located in Hammond (Lake County), Indiana. The revised emission limits are expressed as pounds-per-hour limits ranging from 0.04 to 0.07 applicable to sixteen separate emissions points. The revised emission limits will result in the reduction of total allowable lead emissions from 31,546 pounds per year as provided for in the current federally-approved State Implementation Plan to 6,832.8 pounds per year.

(i) Incorporation by reference.

(A) Indiana Administrative Code 326: Air Pollution Control Board, Article 15 Lead, Rule 1 Lead Emissions Limitations, Section 2—Source Specific Provisions, subsection (a), subdivision 7, clauses (A) through (G). Amended at 22 Indiana Register 1427, effective February 5, 1999.

(130) On February 3, 1999, Indiana submitted a site specific SIP revision request for the Central Soya Company, Incorporated, Marion County, Indiana. The submitted revision amends 326 IAC 6–1–12(a), and provides for revised particulate matter emission totals for a number of source operations at the plant. The revision reflects the closure of nine operations and the addition of five new ones, resulting in a net reduction in particulate matter emissions.

(i) *Incorporation by reference.* The entry for Central Soya Company, Incorporated contained in Indiana Administrative Code Title 326: Air Pollution Control Board, Article 6: Particulate Rules, Rule 1: Nonattainment Area Limitations, Section 12: Marion County. Subsection (a) amended at 22, Indiana Register 416, effective October 16, 1998.

(131) On April 6, 1999, Indiana submitted rules for the control of volatile organic compound emissions from steel mill sinter plant operations in Lake and Porter Counties as a revision to the State Implementation Plan.

(i) *Incorporation by reference.*

326 Indiana Administrative Code 8–13: Sinter Plants. Adopted by the Indiana Air Pollution Control Board March 4, 1998. Filed with the Secretary of State

June 24, 1998. Published at Indiana Register, Volume 21, Number 11, August 1, 1998. Effective July 24, 1998.

(132) On February 3, 1999, Indiana submitted revised particulate matter emissions regulations for Dubois County, Indiana. The submitted revision amends 326 IAC 6–1–9, and includes relaxation of some PM limits, the elimination of limits for boilers which are no longer operating, updated facility names, and changes to boiler fuel types.

(i) Incorporation by reference. Indiana Administrative Code Title 326: Air Pollution Control Board, Article 6: Particulate Rules, Rule 1: Nonattainment Area Limitations, Section 9: Dubois County. Added at 22 In. Reg. 423. Effective October 18, 1998.

(133) On November 22, 1999, Indiana submitted revised particulate matter emissions regulations for Indianapolis Power and Light Company in Marion County, Indiana. The submittal amends 326 IAC 6–1–12, and includes relaxation of some PM limits, tightening of other limits, and the elimination of limits for several boilers which are no longer operating. The revisions also include the combination of annual emissions limits for several boilers, and correction of a typographical error in one limit.

(i) Incorporation by reference. Emissions limits for Indianapolis Power and Light in Marion County contained in Indiana Administrative Code Title 326: Air Pollution Control Board, Article 6: Particulate Rules, Rule 1: Nonattainment Area Limitations, Section 12: Marion County, subsection (a). Added at 22 In. Reg. 2857. Effective May 27, 1999.

(134) On February 3, 1999, the State of Indiana submitted a revision to particulate matter limitations for the Lever Brothers facility in Lake County. On December 28, 1999, Indiana submitted revisions to particulate matter and sulfur dioxide limitations for NIPSCo's Dean Mitchell Station.

(i) Incorporation by reference.

(A) Title 326 of the Indiana Administrative Code (326 IAC) 6–1–10.1 (d)(28) and (d)(33), filed with the Secretary of State on May 13, 1999, effective June 12, 1999. Published at Indiana Register Volume 22, Number 10, July 1, 1999 (22 IR 3047).

(B) Title 326 of the Indiana Administrative Code (326 IAC) 7–4–1.1 (c)(17), filed with the Secretary of State on May 13, 1999, effective June 12, 1999. Published at Indiana Register Volume 22, Number 10, July 1, 1999 (22 IR 3070).

(135) On January 1, 2000, Indiana submitted revised opacity limits for three processes at ALCOA Warrick Operations. The revised limits allow higher opacity emissions during fluxing operations at three casting complexes. This action does not change mass emissions limits for these sources.

(i) *Incorporation by reference.*

(A) Modifications to Operating Permits OP 87–07–91–0112 thru 0116: Permit I.D. 173–10913, Issued on October 1, 1999, to ALCOA, Inc.—Warrick Operations. Effective October 1, 1999.

(B) Modifications to Operating Permit OP 87–07–91–0113: Permit I.D. 173–11414, Issued on December 15, 1999, to ALCOA, Inc.—Warrick Operations. Effective December 15, 1999.

(136) On August 30, 1999, and May 17, 2000, Indiana submitted revised particulate matter and sulfur dioxide emissions regulations for National Starch in Marion County, Indiana. The submittal amends 326 IAC 6–1–12, and includes elimination of shut down sources from the rules, increases in some limits, and a decrease in one limit.

(i) *Incorporation by reference.*

(a) Emissions limits for National Starch in Marion County contained in Indiana Administrative Code Title 326: Air Pollution Control Board, Article 6: Particulate Rules, Rule 1: Nonattainment Area Limitations, Section 12: Marion County. Added at 22 In. Reg. 1953. Effective March 11, 1999.

(b) Emissions limits for National Starch in Marion County contained in Indiana Administrative Code Title 326: Air Pollution Control Board, Article 7: Sulfur Dioxide Rules, Rule 4: Emission Limitations and Requirements by County, Section 2: Marion County Sulfur Dioxide Emission Limitations. Added at 22 In. Reg. 1953. Effective March 11, 1999.

(138) On August 2, 2000, Indiana submitted revised total suspended particulate emissions regulations for Illinois

Cereal Mills, Incorporated in Marion County, Indiana. The submittal amends 326 IAC 6–1–12(a). It includes an increase in the annual particulate matter limit from 0.7 tons per year (TPY) to 1.0 TPY for a boiler and a decrease in the annual limit from 6.3 TPY to 6.0 TPY for a grain elevator.

(i) Incorporation by reference.

Emissions limits for Illinois Cereal Mills, Incorporated in Marion County contained in Indiana Administrative Code Title 326: Air Pollution Control Board, Article 6: Particulate Rules, Rule 1: Non-attainment Area Limitations, Section 12: Marion County, subsection (a). Filed with the Secretary of State on May 26, 2000 and effective on June 25, 2000. Published in 23 *Indiana Register* 2414 on July 1, 2000.

(139) On December 30, 1999, Indiana submitted revised total suspended particulate emissions regulations for Johns Manville Corporation in Wayne County. The submittal appends 326 IAC 6–1–14. It includes raising seven long-term emissions limits, lowering one short-term limit, removing one emissions source, and a name change for the company. The long-term limits are being raised to allow to facility to operate 8760 hours annually. Switching fuel for a boiler allows its short-term limit to be decreased. One emissions source was removed from this facility. The Johns Manville, Wayne County, facility was formerly known as Schuller International, Incorporated.

(i) Incorporation by reference.

Emissions limits for Johns Manville Corporation in Wayne County contained in Indiana Administrative Code Title 326: Air Pollution Control Board, Article 6: Particulate Rules, Rule 1: Non-attainment Area Limitations, Section 14: Wayne County. Filed with the Secretary of State on September 24, 1999, and effective on October 24, 1999. Published in 23 *Indiana Register* 301 on November 1, 1999.

(140) On August 31, 2000, Indiana submitted revised particulate matter emissions regulations for Rolls-Royce Allison in Marion County, Indiana. The submittal amends 326 IAC 6–1–12(a). It includes a name change for the company from the Allison Engine Company to Rolls-Royce Allison and the addition of an alternate fuel, landfill gas. Landfill gas can be used in boilers 1 through 4 of plant 5 and boilers 3, 4, and 7 through 10 of plant 8. These state implementation plan revisions do not change the particulate matter emissions limits.

(i) *Incorporated by reference.* Amendments to Indiana Administrative Code Title 326: Air Pollution Control Board, Article 6: Particulate Rules, Rule 1: Non-attainment Area Limitations, Section 12: Marion County, subsection (a). Filed with the Secretary of State on May 26, 2000 and effective on June 25, 2000. Published in 23 *Indiana Register* 2419 on July 1, 2000.

(141) On February 16, 2001 Indiana submitted revised particulate matter emissions regulations for Cerestar USA, Inc. The submittal amends 326 IAC 6–1–10.1, and includes the elimination of 18 emission points, the addition of 39 new emission points, and a change in the way the short-term emission limits are expressed (from pounds of particulate matter per ton of product to grains per dry standard cubic feet). The revision also changes the name of the facility listed in the rules from American Maize Products (Amaizo) to Cerestar USA, Inc.

(i) *Incorporation by reference.*

Emissions limits for Cerestar USA, Inc. in Lake County contained in Indiana Administrative Code Title 326: Air Pollution Control Board, Article 6: Particulate Rules, Rule 1: Nonattainment Area Limitations, Section 10.1: Lake County PM_{10} emission requirements. Added at 24 In. Reg. 1308. Effective January 13, 2001.

(142) On June 8, 2000 the Indiana Department of Environmental Management submitted a State Implementation Plan (SIP) revision amending certain provisions of the Indiana vehicle inspection and maintenance (I/M) program in operation in Lake, Porter, Clark, and Floyd Counties. Among the most significant changes being made to the program include: the exemption of the current calendar year model vehicle plus the (3) previous model years vehicles from emission testing; the inclusion of language that allows the use of the IM93 alternative vehicle emission test currently being used in the program; language that updates the requirement to test vehicles equipped

with second generation on-board diagnostics systems (OBDII); and the elimination of the off-cycle test, which is the emission test currently required when there is a change in possession of motor vehicle titles. The Air Pollution Control Board amended 326 IAC 13–1.1 and repealed 326 IAC 13–1.1–17, thereby putting in place the revisions to the I/M program.

(i) Incorporation by reference.

(A) 326 Indiana Administrative Code 13–1.1 adopted December 2, 1998, effective January 22, 1999.

(ii) Other material.

(A) June 8, 2000 letter and enclosures from the Indiana Department of Environmental Management (IDEM) Commissioner to the Regional Administrator of the United States Environmental Protection Agency (USEPA) submitting Indiana's revision to the ozone State Implementation Plan (SIP).

(143) On November 15, 2000, the State submitted rules to reduce volatile organic compound emissions from cold cleaning degreasing.

(i) *Incorporation by reference.* 326 Indiana Administrative Code 8–3: Organic Solvent Degreasing Operations, Section 1, Applicability, and Section 8, Material Requirements for Cold Cleaning Degreasers. Final adoption by the Indiana Air Pollution Control Board on November 4, 1998. Filed with the Secretary of State on April 27, 1999. Effective May 27, 1999. Published at Indiana Register, Volume 22, Number 9, June 1, 1999.

(144) On August 20, 2001 and September 19, 2001, Indiana submitted a plan in response to Phase I of the NO_X SIP Call. The plan includes Indiana's Phase I NO_X Budget Demonstration and supporting documentation including initial unit allocations and two new rules: 326 IAC 10–3 and 326 IAC 10–4.

(i) Incorporation by reference.

(A) Indiana Administrative Code Title 326: Air Pollution Control Board, Article 10; Ozone rules, Rule 3: Nitrogen Oxide Reduction Program for Specific Source Categories (326 IAC 10–3). Adopted June 6, 2001. Submitted August 20, 2001 and September 19, 2001. State effective September 16, 2001.

(B) Indiana Administrative Code Title 326: Air Pollution Control Board, Article 10; Ozone rules, Rule 4: Nitrogen Oxides Budget Trading Program (326 IAC 10–4). Adopted June 6, 2001. Submitted August 20, 2001 and September 19, 2001. State effective September 16, 2001.

(145) Indiana submitted on December 17, 1997, as part of the 9% Rate of Progress Plan, an agreed order between U.S. Steel and the Indiana Department of Environmental Management. Section 3 of Exhibit E requires U.S. Steel to establish a coke plant process water treatment plant at its Gary Works.

(i) Incorporation by Reference.

(A) Section 3 of Exhibit E of the March 22, 1996, Agreed Order between U.S. Steel (currently USX Corporation) and the Indiana Department of Environmental Management.

(146) On October 21, 1999, Indiana submitted revised state opacity regulations. The submittal amends 326 IAC 5–1–1, 5–1–2, 5–1–3, 5–1–4(b), and 5–1–5(b). The revisions address provisions concerning the startup and shutdown of operations, averaging period terminology, temporary exemptions, alternative opacity limits, and conflicts between continuous opacity monitor and visual readings.

(i) *Incorporation by reference.* Opacity limits for Indiana contained in Indiana Administrative Code Title 326: Air Pollution Control Board, Article 5: Opacity Regulations. Filed with the Secretary of State on October 9, 1998 and effective on November 8, 1998. Published in 22 *Indiana Register* 426 on November 1, 1998.

(ii) *Additional material.* Letter of October 10, 2001, from Janet McCabe, Indiana Department of Environmental Management, Assistant Commissioner of the Office of Air Quality, to Stephen Rothblatt, US EPA Region 5, Chief of Air Programs Branch. The letter adds the technical justification and air quality analysis required for alternate opacity limits.

(147) On February 1, 2002, Indiana submitted its Prevention of Significant Deterioration rules as a revision to the State implementation plan.

(i) Incorporation by reference.

(A) Title 326 of the Indiana Administrative Code, Rules 2–2–1, 2–2–2, 2–2–3, 2–

2–4, 2–2–5, 2–2–6, 2–2–7, 2–2–9, 2–2–12, and 2–2–14. Filed with the Secretary of State on December 20, 2001, effective January 19, 2002.

(B) Title 326 of the Indiana Administrative Code, Rules 2–2–8, 2–2–10, 2–2–11, 2–2–13, 2–2–15 and 2–2–16. Filed with the Secretary of State on March 23, 2001, effective April 22, 2001.

(C) Title 326 of the Indiana Administrative Code, Rules 2–1.1–6 and 2–1.1–8. Filed with the Secretary of State on November 25, 1998, effective December 25, 1998. Errata filed with the Secretary of State on May 12, 1999, effective June 26, 1999.

(148) On August 8, 2001, the State submitted rules to incorporate by reference Federal capture efficiency test methods. The submittal amends 326 IAC 8–1–4.

(i) Incorporation by reference.

Title 326: Air Pollution Control Board; Article 8: Volatile Organic Compound Rules; Rule 1: General Provisions; Section 4: Testing procedures. Filed with the Secretary of State on June 15, 2001 and effective on July 15, 2001. Published in 24 *Indiana Register* 3619 on August 1, 2001.

(149) [Reserved]

(150) On July 18, 2000 the Indiana Department of Environmental Management submitted a State Implementation Plan (SIP) revision amending certain provisions of Indiana's gasoline transport testing requirements with additional material submitted on January 11, 2002 and March 13, 2002. The Air Pollution Control Board amended 326 IAC 8–4–7 and 326 IAC 8–4–9 and added 326 IAC 20–10.

(i) Incorporation by reference.

(A) 326 Indiana Administrative Code 8–4–7; 8–4–9; and 20–10–01 adopted May 5, 1999, effective November 5, 1999.

(ii) Additional materials.

(A) July 18, 2000 letter and enclosures from the Indiana Department of Environmental Management (IDEM) Commissioner to the Regional Administrator of the United States Environmental Protection Agency (EPA) submitting Indiana's revision to the ozone SIP.

(B) January 11, 2002 letter and enclosures from IDEM to EPA submitted as an addendum to the July 18, 2000 revision to the ozone SIP.

(C) March 13, 2002 letter and enclosures from IDEM to EPA submitted as an addendum to the July 18, 2000 revision to the ozone SIP.

(151) On March 5, 2002, the Indiana Department of Environmental Management requested a revision to the Indiana State Implementation Plan in the form of revisions to the Permit Review Rules intended to add regulations to assure that construction permit conditions exist independently of title V permits. This revision took the form of an amendment to Title 326: Air Pollution Control Board of the Indiana Administrative Code (326 IAC) 2–1.1–9.5 General Provisions; Term of Permit.

(i) Incorporation by reference.

(A) Indiana Administrative Code Rules 326 IAC 2–1.1–9.5. Adopted by the Indiana Air Pollution Control Board October 3, 2001. Filed with the Secretary of State December 20, 2001. Effective January 19, 2002. Published at Indiana Register, Volume 25, Number 5, February 1, 2002.

(152) On December 19, 2001, Indiana submitted revised Particulate Matter (PM) control requirements. A March 17, 2003 letter from Indiana clarified what portions of the original submission the State was seeking revisions for. EPA is approving revisions for certain natural gas combustion sources in Indiana and various cleanup revisions to Indiana's PM rules. One revision eliminates PM emissions limits on specified natural gas combustion sources and replaces the limits with a requirement that such sources may only burn natural gas. The submission also contains many cleanup provisions such as eliminating limits for sources which have shut down and updating names of sources.

(i) Incorporation by reference.

(A) Indiana Administrative Code (IAC) Title 326: Air Pollution Control Board, Article 6: Particulate Rules, Rule 1: Nonattainment Area Limitations, IAC 6–1–1.5: Definitions; IAC 6–1–2: Particulate emission limitations; fuel combustion steam generators, asphalt concrete plant, grain elevators, foundries, mineral aggregate operations; modification by commissioner;

IAC 6–1–3: Non-attainment area particulate limitations; compliance determination; IAC 6–1–4: Compliance schedules; IAC 6–1–5: Control strategies; IAC 6–1–6: State Implementation Plan revisions; IAC 6–1–8.1: Dearborn County particulate matter emissions limitations; IAC 6–1–9: Dubois County; IAC 6–1–10.1: Lake County PM_{10} emission requirements, Subsections (a) through (k); IAC 6–1–11.1: Lake County fugitive particulate matter control requirements; IAC 6–1–12: Marion County; IAC 6–1–13: Vigo County; IAC 6–1–14: Wayne County; IAC 6–1–15: Howard County; IAC 6–1–16: Vanderburgh County; IAC 6–1–17: Clark County; and, IAC 6–1–18: St. Joseph County. Adopted by the Indiana Air Pollution Control Board August 1, 2001. Filed with the Secretary of State November 8, 2001. Published in the *Indiana Register,* Volume 25, Number 3, December 1, 2001 at 709. State effective December 8, 2001.

(B) Indiana Administrative Code (IAC) Title 326: Air Pollution Control Board, Article 6: Particulate Rules, Rule 1: Non-attainment Area Limitations, 6–1–1: Applicability. Adopted by the Indiana Air Pollution Control Board August 1, 2001. Filed with the Secretary of State November 8, 2001. Published in the *Indiana Register,* Volume 25, Number 3, December 1, 2001 at 709. State effective, December 8, 2001. Amended by Errata filed with the Secretary of State January 10, 2002. Published in the *Indiana Register,* Volume 25, Number 5, February 1, 2002 at 1644. State effective, February 24, 2002. And amended by Errata filed with the Secretary of State October 2, 2002. Published in the *Indiana Register,* Volume 26, Number 2, November 1, 2002 at 383. State effective, November 16, 2002.

(153) On April 30, 2002 and September 6, 2002, Indiana submitted revised particulate matter regulations for Union Tank Car's railcar manufacturing facility in Lake County, Indiana. The submittal amends 326 IAC 6–1–10.1. The revisions consist of relaxing the limits for the grit blaster. The new limits are 0.01 grains per dry standard cubic foot and 9.9 pounds per hour.

(i) Incorporation by reference.

Amendments to Indiana Administrative Code Title 326: Air Pollution Control Board, Article 6: Particulate Rules, Rule 1: Non-attainment Area Limitations, Section 10.1: Lake County PM_{10} emission requirements. Filed with the Secretary of State on July 26, 2002 and effective on August 25, 2002. Published in 25 *Indiana Register* 4076 on September 1, 2002.

(154) On August 08, 2001, Indiana submitted revised volatile organic Compound control requirements for certain facilities in the Indiana shipbuilding and ship repair industry. This submittal changes the individual and plantwide coating exemption levels and makes revisions to the compliance requirements, test methods and recordkeeping requirements. On October 1, 2002, Indiana submitted a letter providing its interpretation of certain of the above requirements.

(i) Incorporation by reference.

(A) Indiana Administrative Code Title 326: Air Pollution Control Board, Article 8: Volatile Organic Compounds, Rule 12: Shipbuilding or Ship Repair Operations in Clark, Floyd, Lake, and Porter Counties, Section 2: Exemptions, Section 4: Volatile organic compound emissions limiting requirements, Section 5: Compliance requirements, Section 6: Test methods and procedures, Section 7: Recordkeeping, notification, and reporting requirements. Adopted by the Indiana Air Pollution Control Board on February 7, 2001. Filed with the Secretary of State June 15, 2001, effective July 15, 2001.

(B) An October 1, 2002, letter from the Indiana Department of Environmental Management which provides background information on its shipbuilding and ship repair rule revisions and its interpretation of certain of these requirements.

(155) On October 17, 2002, the State submitted revised particulate matter emission limits for the Knauf Fiber Glass in Shelby County for incorporation into the Indiana SIP.

(i) Incoropration by reference.

(A) Indiana Administrative Code Title 326: Air Pollution Control Board, Article 11 Emission Limitations for Specific Types of Operations, Rule 4 Fiberglass Insulation Manufacturing, Paragraph 5 Shelby County (326 IAC 11–4–5). Adopted by the Indiana Air Pollution Control Board on May 1, 2002. Filed with the Secretary of State on

August 28, 2002. Published in the *Indiana Register,* Volume 26, Number 1, October 1, 2002, effective September 27, 2002.

(156) On April 3, 2000 the State submitted a revision to Indiana's State Implementation Plan to allow the Department of the Navy use of military specification coatings containing volatile organic compound (VOC) control requirements with content up to 5.45 pounds of VOC per gallon of coating less water for the projectile renovations operations in Building 2728 at the Naval Surface Warfare Center, Crane Division.

(i) Incorporation by reference.

(A) Part 70 Significant Source Modification No.: 101–11153–00005 as issued by the Indiana Air Pollution Control Board on October 12, 1999.

(157) [Reserved]

(158) On October 21, 2002 and January 10, 2003, Indiana submitted revised volatile organic compound regulations for dip and flow coating operations. The revisions include replacing daily compliance with a rolling thirty day average and adding new equivalent emission limits.

(i) Incorporation by Reference.

Amendments to Indiana Administrative Code Title 326: Air Pollution Control Board, Article 8: Volatile Organic Compound Rules, Rule 1: General Provisions, Section 2: Compliance Methods. Filed with the Secretary of State on November 15, 2002, and effective on December 15, 2002. Published in 26 *Indiana Register* 1073 on January 1, 2003.

(159) On January 31, 2003, Indiana submitted revised particulate matter regulations for Richmond Power and Light Company's coal burning power plant in Wayne County, Indiana. The submission amends 326 IAC 6–1–14. The revisions make the long-term emission limits consistent with the short-term limits approved by EPA on April 9, 1996. The new limits are 320 tons per years for boiler number 1 and 700 tons per years for boiler number 2.

(i) Incorporation by Reference.

Amendments to Indiana Administrative Code Title 326: Air Pollution Control Board, Article 6: Particulate Rules, Rule 1: Non–attainment Area Limitations, Section 14: Wayne County PM emission requirements. Filed with the Secretary of State on March 10, 2003 and effective on April 9, 2003. Published in 26 *Indiana Register* 2318–19 on April 1, 2003.

(160)–(161) [Reserved]

(162) On January 7, 2003 the Indiana Department of Environmental Management submitted a State Implementation Plan (SIP) revision amending certain provisions of Indiana's 326 IAC 8–2–9 (Miscellaneous metal coating operations) and 326 IAC 13–3–1 (Applicability, Control of gasoline Reid vapor pressure).

(i) Incorporation by reference.

(A) 326 Indiana Administrative Code 8–2–9; and 13–3–1 adopted August 7, 2002, effective December 15, 2002.

(ii) Additional materials.

(A) January 7, 2003 letter and enclosures from the Indiana Department of Environmental Management (IDEM) Commissioner to the Regional Administrator of the United States Environmental Protection Agency (EPA) submitting Indiana's revisions to the ozone SIP.

(163) On June 26, 2003, the Indiana Department of Environmental Management (IDEM) submitted revisions to 326 IAC 10–3 (NO_X Reduction Program for Specific Source Categories) and 326 IAC 10–4 (NO_X Budget Trading Program) of the Indiana Administrative Code (IAC). Also, on August 4, 2003, IDEM submitted a letter containing the Legislative Service Agency Document #00–54(F) as published in the Indiana Register on August 1, 2003, 26 IR 3550, containing the legal and approving signatures. The revised rules change the Indiana Phase I NO_X budget to 233,548 tons per ozone season for 2007.

(i) Incorporation by reference.

(A) Indiana Pollution Control Board rules: 326 IAC 10–3–1 and 326 IAC 10–4–1, 10–4–2, 10–4–9, 10–4–10, 10–4–13, 10–4–14 and 10–4–15. Adopted by the Indiana Pollution Control Board on May 7, 2003. Filed with the Secretary on July 7, 2003. Published at Indiana Register Volume 26, Number 11, August 1, 2003 (26 IR 3550). Effective August 6, 2003.

(164) On June 13, 2003, and as supplemented on October 3, 2003, Indiana submitted a State Implementation Plan (SIP) revision for the control of emissions of particulate matter (PM_{10}) in the state of Indiana. Revisions to 326

IAC 6–1–10.1 and 326 IAC 6–1–10.2 amend the PM_{10} emission limits at U.S. Steel-Gary Works and U.S. Steel-Gary Coke Operations, located in Lake County, Indiana, and should result in decreased PM_{10} emissions of approximately 350 tons per year.

(i) Incorporation by reference. The following sections of the Indiana Administrative Code are incorporated by reference.

(A) Amendments to Indiana Administrative Code Title 326: Air Pollution Control Board, Article 6: Particulate Rules, Rule 1: Non-attainment Area Limitations, Section 10.1: Lake County PM_{10} emission requirements. Filed with the Secretary of State on August 6, 2003 and effective on September 5, 2003. Published at Indiana Register, Volume 27, Number 1, October 1, 2003 (27 IR 61).

(B) Amendments to Indiana Administrative Code Title 326: Air Pollution Control Board, Article 6: Particulate Rules, Rule 1: Non-attainment Area Limitations, Section 10.2: Lake County PM_{10} coke battery emission requirements. Filed with the Secretary of State on August 6, 2003 and effective on September 5, 2003. Published at Indiana Register, Volume 27, Number 1, October 1, 2003 (27 IR 85).

[37 FR 10863, May 31, 1972]

EDITORIAL NOTE: For FEDERAL REGISTER citations affecting § 52.770, see the List of CFR Sections Affected, which appears in the Finding Aids section of the printed volume and on GPO Access.

EFFECTIVE DATE NOTE: At 69 FR 29073, May 20, 2004, § 52.770 was amended by adding paragraph (c)(165), effective July 19, 2004. For the convenience of the user, the added text follows:

§ 52.770 Identification of plan.

* * * * *

(c) * * *

(165) On January 16, 2004 Indiana submitted revised Prevention of Significant Deterioration rules as a revision to the Indiana State Implementation Plan.

(i) Incorporation by reference.

(A) Amendments to the Indiana Administrative Code, Title 326: Air Pollution Control Board; Article 2: Permit Review Rules; Rule 2: Prevention of Significant Deterioration (PSD) Requirements; Section 2–2–1 Definitions; Section 2–2–6 Increment consumption; requirements; and Section 2–2–12 Permit rescission. Filed with the Secretary of State on March 9, 2004, effective April 8, 2004. Published at 27 Indiana Register 2216; April 1, 2004.

§ 52.771 Classification of regions.

(a) The Indiana plan was evaluated on the basis of the following classifications:

Air quality control region	Pollutant				
	Particulate matter	Sulfur oxides	Nitrogen dioxide	Carbon monoxide	Photochemical oxidants (hydrocarbons)
East Central Indiana Intrastate	II	II	III	III	III
Evansville (Indiana)-Owensboro-Henderson (Kentucky) Interstate	I	II	III	III	III
Louisville Interstate	I	I	III	III	I
Metropolitan Chicago Interstate (Indiana-Illinois)	I	I	I	I	I
Metropolitan Cincinnati Interstate	I	II	III	III	I
Metropolitan Indianapolis Intrastate	I	I	I	I	I
Northeast Indiana Intrastate	II	III	III	III	III
South Bend-Elkhart (Indiana)-Benton Harbor (Michigan) Interstate	I	IA	III	III	III
Southern Indiana Intrastate	IA	IA	III	III	III
Wabash Valley Intrastate	I	I	III	III	III

(b) The requirements of § 51.150 of this chapter are not met by the classification of counties in APC–22 for the purposes of attainment and maintenance of the total suspended particulate ambient air quality standards.

(c) The requirements of § 51.150 of this chapter are not met by the classification of counties in APC–22 for the purposes of attainment and maintenance of the photochemical oxidant (hydrocarbon) ambient air quality standards.

(d) The requirements of § 51.150 of this chapter are not met by the classification of Jefferson, LaPorte, Porter, Vigo and Warrick Counties in Indiana in Regulation APC–22 for the purposes of attainment and maintenance of the sulfur dioxide ambient air quality standards.

[37 FR 10863, May 31, 1972, as amended at 39 FR 16346, May 8, 1974; 40 FR 50033, Oct. 28, 1975; 41 FR 35677, Aug. 24, 1976; 42 FR 34519, July 6, 1977; 51 FR 40675, Nov. 7, 1986]

§ 52.772 [Reserved]

§ 52.773 Approval status.

(a) With the exceptions set forth in this subpart, the Administrator approves Indiana's plan for attainment and maintenance of the National Ambient Air Quality Standards under section 110 of the Clean Air Act.

(b) [Reserved]

(c) The Administrator finds that Indiana's new source review strategy satisfies all requirements of Part D, Title 1 of the Clean Air Act as amended in 1977.

(d)–(e) [Reserved]

(f) The Administrator finds ozone strategies for Clark, Elkhart, Floyd, Lake, Marion, Porter, and St. Joseph Counties satisfy all requirements of Part D, Title I of the Clean Air Act that are required to be submitted by January 1, 1981, except as noted below.

(g) The administrator finds that the total suspended particulate strategies for Clark, Dearborn, Dubois, St. Joseph, Vanderburgh, and Vigo Counties satisfy all the requirements of Part D, Title I of the Clean Air Act except as noted below.

(h) The Administrator finds that the SO_2 strategies for Lake, LaPorte, Marion, Vigo, and Wayne Counties satisfy all requirements of Part D, Title 1 of the Clean Air Act, as amended in 1977. See § 52.770 (c)(67) and (c)(72).

(i) The Administrator finds that Indiana's ozone plan for Lake and Porter Counties, which was required to be submitted by July 1, 1992, does not satisfy all the requirements of part D, title 1 of the Clean Air Act and, thus, is disapproved. See §§ 52.770(c)(69)and 52.770(d). The disapproval does not affect USEPA's approval (or conditional approval) of individual parts of Indiana's ozone plan and they remain approved.

(j) The Administrator finds that the following portions of Indiana's ozone and CO plans satisfy the related requirements of part D, title 1 of the Clean Air Act, as amended in 1977:

(1) The transportation control plans for Lake, Porter, Clark and Floyd Counties, submitted on May 14, 1986, June 10, 1986, and April 6, 1987.

(2) The vehicle inspection and maintenance plan for Clark, Floyd, Lake, and Porter Counties, submitted October 27, 1989, and January l9, 1990.

(3) The demonstration of attainment, submitted December 2, 1983, and the carbon monoxide plan as a whole for the designated nonattainment area in Lake County.

[37 FR 10864, May 31, 1972, as amended at 46 FR 38, Jan. 2, 1981; 47 FR 6275, Feb. 11, 1982; 47 FR 6623, Feb. 16, 1982; 47 FR 10825, Mar. 12, 1982; 47 FR 20586, May 13, 1982; 47 FR 30980, July 16, 1982; 51 FR 4915, Feb. 10, 1986; 53 FR 33811, Sept. 1, 1988; 53 FR 46613, Nov. 18, 1988; 54 FR 2118, Jan. 19, 1989; 55 FR 31052, July 31, 1990; 59 FR 51114, Oct. 7, 1994]

§ 52.774 [Reserved]

§ 52.775 Legal authority.

(a) The requirements of § 51.232(b) of this chapter are not met since the following deficiencies exist in the local agency legal authority:

(1) East Chicago: (i) Authority to require recordkeeping is inadequate (§ 51.230(e) of this chapter).

(ii) Authority to require installation of monitoring devices is inadequate (§ 51.230(f) of this chapter).

(2) Evansville: (i) Authority to prevent construction, modification, or operation of any stationary source at any location where emissions from such source will prevent the attainment or maintenance of a national standard is inadequate (§ 51.230(d) of this chapter).

(ii) Authority to require recordkeeping is inadequate (§ 51.230(e) of this chapter).

(iii) Authority to require installation of monitoring devices is inadequate (§ 51.230(f) of this chapter).

(3) Gary: (i) Authority to require recordkeeping is inadequate (§ 51.230(e) of this chapter).

(ii) Authority to require installation of monitoring devices is inadequate (§ 51.230(f) of this chapter).

(4) Hammond: (i) Authority to require recordkeeping is inadequate (§ 51.230(e) of this chapter).

(ii) Authority to require installation of monitoring devices is inadequate (§ 51.230(f) of this chapter).

(5) Indianapolis: (i) Authority to require recordkeeping is inadequate (§ 51.230(e) of this chapter).

(ii) Authority to require installation of monitoring devices is inadequate (§ 51.230(f) of this chapter).

(6) Michigan City: (i) Authority to require recordkeeping is inadequate (§ 51.230(e) of this chapter).

(ii) Authority to require installation of monitoring devices is inadequate (§ 51.230(f) of this chapter).

(7) Wayne County: (i) Authority to require recordkeeping and to make inspections and conduct tests of air pollution sources is inadequate (§ 51.230(e) of this chapter).

(ii) Authority to require installation of monitoring devices is inadequate (§ 51.230(f) of this chapter).

(iii) Authority to prevent construction, modification, or operation of any stationary source at any location where emissions from such source will prevent the attainment or maintenance of a national standard is inadequate (§ 51.230(d) of this chapter).

(8) Lake County: (i) Authority to require installation of monitoring devices is inadequate (§ 51.230(f) of this chapter).

(ii) Authority to prevent construction, modification, or operation of any stationary source at any location where emissions from such source will prevent the attainment or maintenance of a national standard is inadequate (§ 51.230(d) of this chapter).

(9) St. Joseph County: (i) Authority to prevent construction, modification, or operation of any stationary source at any location where emissions from such source will prevent the attainment or maintenance of a national standard is inadequate (§ 51.230(d) of this chapter).

(ii) Authority to require recordkeeping is inadequate (§ 51.230(e) of this chapter).

(iii) Authority to require installation of monitoring devices is inadequate (§ 51.230(f) of this chapter).

(10) Vigo County: (i) Authority to require recordkeeping is inadequate (§ 51.230(e) of this chapter).

(ii) Authority to require installation of monitoring devices is inadequate (§ 51.230(f) of this chapter).

(iii) Authority to prevent construction, modification, or operation of any stationary source at any location where emissions from such source will prevent the attainment or maintenance of a national standard is inadequate (§ 51.230(d) of this chapter).

(11) Anderson County: (i) Authority to require installation of monitoring devices is inadequate (§ 51.230(f) of this chapter).

[37 FR 10863, May 31, 1972, as amended at 40 FR 55329, Nov. 28, 1975; 51 FR 40676, Nov. 7, 1986; 52 FR 24367, June 30, 1987]

§ 52.776 Control strategy: Particulate matter.

(a) The requirements of subpart G of this chapter are not met since the plan does not provide for attainment and maintenance of the secondary standards for particulate matter in the Metropolitan Indianapolis Intrastate Region.

(b) APC 4–R of Indiana's "Air Pollution Control Regulations" (emission limitation for particulate matter from fuel combustion sources), which is part of the control strategy for the secondary standards for particulate matter, is disapproved for the Metropolitan Indianapolis Intrastate Region since it does not provide the degree of control needed to attain and maintain the secondary standards for particulate matter. APC 4–R is approved for attainment and maintenance of the primary standards for particulate matter in the Metropolitan Indianapolis Intrastate Region.

(c) APC–3 of Indiana's Air Pollution Control Regulations (visible emission limitation) is disapproved insofar as the phrase "for more than a cumulative total of 15 minutes in a 24-hour period"

will interfere with attainment and maintenance of particulate standards.

(d) [Reserved]

(e) Part D—Conditional Approval—The complete Indiana plan for Clark, Dearborn, Dubois, Marion (except for coke batteries), St. Joseph, Vanderburgh, and Vigo Counties is approved provided that the following condition is satisfied:

(1) The Part D Plan must contain Industrial Fugitive Dust Regulations. The State must submit these by July 31, 1982.

(f) 325 IAC 11–3–2(f), (as amended on August 27, 1981) is not approved as it applies to Lake and Marion Counties, insofar as it does not meet the requirements of section 172(b)(3) of the Clean Air Act.

(g) 325 IAC 11–3–2(g) and 11–3–2(h) (as amended on August 27, 1981) are disapproved insofar as they do not meet the requirements of section 110(a)(2)(D) of the Clean Air Act.

(h) Equivalent Visible Emission Limits (EVEL). (1) A 20% 2-hour opacity limit for the underfire stack at Bethlehem Steel Corporation's Coke Battery No. 2 in Porter County is approved as an EVEL to determine compliance with the 325 IAC 6–2 SIP limit of 0.33 lbs/MMBTU. This EVEL is approved for as long as the SIP mass emission limit for this source remains the same as determined by 325 IAC 6–2 (October 6, 1980, submittal). See §52.770(c)(6), (35), and (42).

(2) Revised opacity limits for the boilers at Olin Corporation in Warren County are approved at §52.770(c)(51) as an EVEL to determine compliance with the 325 IAC 6–2 SIP limit of 0.80 lbs/MMBTU. This EVEL is approved for as long as the SIP mass emission limit for this source remains the same as determined by 325 IAC 6–2 (October 6, 1980 submittal). See §52.770(c)(6) and (35).

(i) 325 IAC 6–2.1 is approved with the State's March 27, 1985, commitment that any "bubble" approved by the State under 325 IAC 6–2.1–2(b) and 3(b) will also be subject to the State's general "bubble" regulation, 325 IAC 2–4. The State additionally committed that until such time as 325 IAC 2–4 is approved as a part of the SIP, all such limits approved under the bubbling provisions of 325 IAC 6–2.1–2(b) and 3(b) will be submitted as site specific revisions to the SIP. Unless and until these emission point specific limits are approved as a portion of the SIP, the SIP limit for each individual emission point will remain the general limit calculated by means of the formulae in 325 IAC 6–2.1–2(a) and 3(a), even though a revised emission point specific limit has been adopted by Indiana under 325 IAC 6–2.1–2(b) and 3(b). See 52.770(c)(50).

(j) [Reserved]

(k) On January 18, 1984, Indiana submitted a visible emission limit on coke oven battery doors and a limit on total dissolved solids content of coke quench makeup water for Battery Number One at Citizens Gas and Coke Utility in Marion County. These limits are disapproved because they are impermissible relaxations of requirements for each new major stationary sources, as provided at §52.21(j)(2) and section 173 of the Clean Air Act. See §52.770(c)(60).

(l) The revised Porter County TSP plan, as submitted by Indiana on October 15, 1984, is disapproved, because the State did not demonstrate that it assures the attainment and maintenance of the primary TSP NAAQS in Porter County, Indiana. See §52.770(c)(61).

(m) The Indiana Part D TSP plan is disapproved insofar as it does not contain RACT level opacity limits for certain process fugitive sources in TSP nonattainment areas and, therefore, does not meet the requirements of section 172 of the Clean Air Act.

(n) Approval—On June 23, 1988, and July 17, 1989, the State of Indiana submitted committal SIPs for particulate matter with an aerodynamic diameter equal to or less than 10 micrometers (PM_{10}) for the Group II areas within Marion and Vigo Counties and all of Porter County, respectively. The committal SIPs meet all the requirements identified in the July 1, 1987, promulgation of the SIP requirements for PM_{10} at 52 FR 24681.

(o) Approval—On November 16, 1988 and September 10, 1992, Indiana submitted the following list of control measures for particulate matter (PM) already in its State Implementation Plan as a Group III Plan: 326 IAC 1–3–2, its air monitoring network, its list of possible additional sites for PM, its

Prevention of Significant Deterioration rules and the following control measures which are part of 325 IAC: 2, Permit Review Rules; 5–1, Opacity Limitations; 6–1–1 to 6–1–6, Nonattainment Area Limitations; 6–1–8, Dearborn County; 6–1–9, Dubois County; 6–1–12, Marion County; 6–1–13, Vigo County; 6–1–14, Wayne County; 6–1–15, Howard County; 6–1–16, Vandenburgh County; 6–1–17, Clark County; 6–1–18, St. Joseph County; 6–2, Particulate Emissions Limitations for Sources of Indirect Heating; 6–3, Process Operations; 6–4, Fugitive Dust Emissions; 11–1, Existing Foundries; 11–4, Fiberglass Insulation Manufacturing; 11–5, Fluoride Emission Limitations for Existing Primary Aluminum Plants.

(p) Approval–On January 13, 1993, the State of Indiana submitted a particulate matter State Implementation Plan revision for the Vermillion County nonattainment area. Additional information was submitted on February 22, 1993, and April 8, 1993. These materials demonstrate that the plan will provide for attainment of the National ambient air quality standards for particulate matter by December 31, 1994, in accordance with section 189(a)(1)(B) of the Clean Air Act.

(q) Approval—On April 8, 1993, and supplemented on June 17, 1997, the State of Indiana submitted a maintenance plan and a request that sections 15, 16, 21, 22, 27, 28, 33 and 34 of Clinton Township in Vermillion County be redesignated to attainment of the National Ambient Air Quality Standard for particulate matter. The redesignation request and maintenance plan satisfy all applicable requirements of the Clean Air Act.

(r) Approval—EPA is approving the PM_{10} maintenance plan for Lake County that Indiana submitted on September 25, 2002.

[37 FR 15084, July 27, 1972]

EDITORIAL NOTE: For FEDERAL REGISTER citations affecting § 52.776, see the List of CFR Sections Affected, which appears in the Finding Aids section of the printed volume and on GPO Access.

§ 52.777 Control strategy: photochemical oxidants (hydrocarbons).

(a) The requirements of subpart G of this chapter are not met because the plan does not provide for attainment and maintenance of the national standards for photochemical oxidants (hydrocarbons) in the Metropolitan Indianapolis Intrastate Region by May 31, 1975.

(b) The requirements of subpart G are not met by Revised APC–15 (November 8, 1974 submission) because it does not provide for attainment and maintenance of the photochemical oxidant (hydrocarbon) standards throughout Indiana.

(c) Part D—Conditional approval—The 1979 Indiana plan for Clark, Floyd, Elkhart, Lake, Marion, Porter, and St. Joseph Counties is approved provided the following conditions are satisfied:

(1) The plan for stationary source volatile organic compound control must contain the following:

(i)–(iv) [Reserved]

(v) For regulation 325 IAC 8–5, Section 6, Perchloroethylene Dry Cleaning, the State must conduct a study to demonstrate that the 1,500 gallons exemption meets RACT requirements and submit the results to EPA within 6 months of the effective date of final rulemaking on 325 IAC 8 for VOC from Group II CTG source categories. If the demonstrated emissions resulting from the State's exemption are not essentially equivalent to those resulting from the RACT requirements, then the State must submit to EPA by July 1, 1983, a rule which requires control of emissions from dry cleaning sources using less than 1,500 gallons of perchloroethylene per year.

(2) The stationary source volatile organic control measures submitted by the State on October 23, 1990, and August 19, 1991, are approved as described in 40 CFR 52.770(c)(87) with the exception of 326 IAC 8–5–4 Pneumatic Rubber Tire Manufacturing, on which USEPA has taken no action. It should be noted that although the State's control measures provide that equivalent test methods, alternative emission controls, and revisions in rule applicability must be submitted to the USEPA as proposed revisions to the State Implementation Plan (SIP), such proposed SIP revisions are not part of the SIP unless and until they are approved as such by the USEPA.

(d) Part D—Disapproval. The 1982 Indiana plan for Lake and Porter County is disapproved because it does not assure the attainment and maintenance of the NAAQS there. See §§ 52.770(c)(69) and 52.773(i). The disapproval does not affect USEPA's approval (or conditional approval) of individual parts of Indiana's ozone plan and they remain approved.

(e) Approval—The Administrator approves the incorporation of the photochemical assessment ambient monitoring system submitted by Indiana on November 15, 1993, into the Indiana State Implementation Plan. This submittal satisfies 40 CFR 58.20(f), which requires the State to provide for the establishment and maintenance of photochemical assessment monitoring stations (PAMS) by November 12, 1993.

(f) *Approval.* The Indiana Department of Environmental Management submitted two ozone redesignation requests and maintenance plans requesting the ozone nonattainment areas to be redesignated to attainment for ozone: South Bend/Elkhart (St. Joseph and Elkhart Counties), submitted on September 22, 1993; Indianapolis (Marion County), submitted on November 12, 1993. The redesignation requests and maintenance plans meet the redesignation requirements in section 107(d)(3)(d) of the Act as amended in 1990. The redesignations meet the Federal requirements of section 182(a)(1) of the Clean Air Act as a revision to the Indiana Ozone State Implementation Plan for the above mentioned counties.

(g) The base year ozone precursor emission inventory requirement of section 182(a)(1) of the Clean Air Act, as amended in 1990, has been satisfied for the following areas: Vanderburgh County in the Evansville Metropolitan Area; Marion County in the Indianapolis Metropolitan Area; and St. Joseph and Elkhart Counties in the South Bend Metropolitan Area.

(h) On November 17, 1993, Indiana submitted two of three elements required by section 182(d)(1)(A) of the Clean Air Amendments of 1990 to be incorporated as part of the vehicle miles traveled (VMT) State Implementation Plan intended to offset any growth in emissions from a growth in vehicle miles traveled. These elements are the offsetting of growth in emissions attributable to growth in VMT which was due November 15, 1992, and, any transportation control measures (TCMs) required as part of Indiana's 15 percent reasonable further progress (RFP) plan which was due November 15, 1993. Indiana satisfied the first requirement by projecting emissions from mobile sources and demonstrating that no increase in emissions would take place. Indiana satisfied the second requirement by determining that no TCMs were required as part of Indiana's 15 percent RFP plan.

(i) Approval—EPA is approving the section 182(f) oxides of nitrogen (NO_X) reasonably available control technology (RACT), new source review (NSR), vehicle inspection/maintenance (I/M), and general conformity exemptions for the Indiana portion of the Chicago-Gary-Lake County severe ozone nonattainment area as requested by the States of Illinois, Indiana, Michigan, and Wisconsin in a July 13, 1994 submittal. This approval does not cover the exemption of NO_X transportation conformity requirements of section 176(c) for this area. Approval of these exemptions is contingent on the results of the final ozone attainment demonstration expected to be submitted in mid-1997. The approval will be modified if the final attainment demonstration demonstrates that NO_X emission controls are needed in the nonattainment area to attain the ozone standard in the Lake Michigan Ozone Study modeling domain.

(j) The base year ozone precursor emission inventory requirement of section 182(a)(1) of the Clean Air Act, as amended in 1990, has been satisfied for Lake and Porter Counties, Indiana.

(k) On June 26, 1995, and June 13, 1997, Indiana submitted a 15 percent rate-of-progress plan for the Lake and Porter Counties portion of the Chicago-Gary-Lake County ozone nonattainment area. This plan satisfies the counties' requirements under section 182(b)(1) of the Clean Air Act, as amended in 1990.

(l) [Reserved]

(m) On July 12, 1995, Indiana submitted a 15 percent rate-of-progress plan for the Clark and Floyd Counties portion of the Louisville ozone nonattainment area. This plan satisfies

Clark and Floyd Counties' requirements under section 182(b) of the Clean Air Act, as amended in 1990.

(n) On July 12, 1995, Indiana submitted corrections to the 1990 base year emissions inventory for Clark and Floyd Counties. The July 12, 1995, corrections are recognized revisions to Indiana's emissions inventory.

(o) On July 12, 1995, Indiana submitted as a revision to the Indiana State Implementation Plan a ride-sharing transportation control measure which affects commuters in Clark and Floyd Counties.

(p) On August 26, 1996, Indiana submitted a rule for the purpose of meeting oxides of nitrogen (NO_X) reasonably available control technology (RACT) requirements under section 182(f) of the Clean Air Act (Act) for the Clark and Floyd Counties moderate ozone nonattainment area. The rule's NO_X control requirements meets RACT for major sources of portland cement kilns, electric utility boilers, and industrial, commercial, or institutional boilers. In addition, on April 30, 1997, Indiana certified to the satisfaction of the United States Environmental Protection Agency that, to the best of the State's knowledge, there are no remaining major sources of NO_X in Clark and Floyd Counties which need RACT rules. Indiana, therefore, has satisfied the NO_X RACT requirements under section 182(f) of the Act for the Clark and Floyd Counties ozone nonattainment area.

(q) Approval—On February 5, 1997, Indiana submitted a transportation control measure under section 108(f)(1)(A) of the Clean Air Amendments of 1990 for Vanderburgh County, Indiana to aid in reducing emissions of precursors of ozone. The transportation control measure being approved as a revision to the ozone state implementation plan is the conversion of at least 40 vehicles from gasoline as a fuel to compressed natural gas.

(r) Indiana's November 15, 1996, request for a 1-year attainment date extension for the Indiana portion of the Louisville moderate ozone nonattainment area which consists of Clark and Floyd Counties is approved. The date for attaining the ozone standard in these counties is November 15, 1997.

(s) Approval—On November 4, 1993, the State of Indiana submitted a maintenance plan and a request that Vanderburgh County be redesignated to attainment of the 1-hour National Ambient Air Quality Standard for ozone. The redesignation request and maintenance plan meet the redesignation requirements in section 107(d)(3)(E) of the Clean Air Act as amended in 1990. The redesignation meets the Federal requirements of section 182(a)(1) of the Clean Air Act as a revision to the Indiana ozone State Implementation Plan.

(t) Approval—On May 24, 1996, the Indiana Department of Environmental Management submitted a revision to the ozone State Implementation Plan for Lake and Porter Counties. The submittal pertained to a plan for the implementation of the Federal transportation conformity requirements in accordance with 40 CFR part 51 subpart T—Conformity to State or Federal Implementation Plans of Transportation Plans, Programs, and Projects Developed, Funded or Approved Under Title 23 U.S.C. or the Federal Transit Act.

(u) On December 17, 1997, and January 22, 1998, Indiana submitted the Post-1996 rate-of-progress plan for the Lake and Porter Counties portion of the Chicago-Gary-Lake County ozone nonattainment area. This plan satisfies the counties' requirements under section 182(c)(2)(B) of the Clean Air Act, as amended in 1990. The plan contains a 1999 mobile source vehicle emission budget for volatile organic compounds of 40,897 pounds per average summer day.

(v) Negative declarations—Aerospace coating operations, industrial clean up solvents, industrial wastewater processes, offset lithography operations, business plastics, automotive plastics, and synthetic organic chemical manufacturing industries (SOCMI) batch processes, reactors and distillation units categories. On November 8, 1999, the State of Indiana certified to the satisfaction of the Environmental Protection Agency that no major sources categorized as part of the nine categories listed above and have a potential to emit 100 tons or more of volatile organic compounds annually are located in Clark or Floyd Counties in

southeast Indiana, adjacent to Louisville, Kentucky.

(w) Negative declarations—Aerospace coating operations, industrial clean up solvents, industrial wastewater processes, offset lithography operations, business plastics, automotive plastics, and synthetic organic chemical manufacturing industries (SOCMI) batch processes, reactors and distillation units categories. On November 8, 1999, and January 10, 2000, the State of Indiana certified to the satisfaction of the Environmental Protection Agency that no major sources categorized as part of the nine categories listed above and have a potential to emit 25 tons or more of volatile organic compounds annually are located in Lake or Porter Counties in northwest Indiana.

(x) The request submitted by Indiana on April 11, 2001 and supplemented on August 24, 2001, to redesignate the Indiana portion of the Louisville moderate interstate ozone nonattainment area from nonattainment to attainment was approved on October 23, 2001. The motor vehicle emissions budgets for VOC and NO_X in the Indiana portion of the Louisville moderate interstate maintenance plan are adequate for conformity purposes and approvable as part of the maintenance plan. The 1-hour ozone standard maintenance plan motor vehicle emission budgets for the entire interstate Louisville area for the purposes of transportation conformity are now 48.17 tons per summer day of VOC and 92.93 tons per summer day of NO_X for the year 2012.

(y) Lake and Porter Counties Attainment Demonstration Approval—On December 21, 2000, Indiana submitted a 1-hour ozone attainment demonstration plan as a requested revision to the Indiana State Implementation Plan. This approval includes: A modeled demonstration of attainment, a plan to reduce ozone precursor emissions by 3 percent per year from 2000 to 2007, and associated conformity budgets for 2002 and 2005, a revision to the NO_X waiver, a contingency measures plan for both the ozone attainment demonstration and the post-1999 ROP plan, the conformity budgets for the 2007 attainment year, until such time that revised budgets are submitted and found adequate for conformity purposes as called for by the state in its commitment to recalculate and apply a revised budget for conformity within two years of the formal release of MOBILE6, the RACM analysis, the commitment to conduct a mid-course review of the attainment status of the Lake Michigan area, and an agreed order between U.S. Steel (currently USX Corporation) and the IDEM signed by IDEM on March 22, 1996, which requires U.S. Steel to establish a coke plant process water treatment plant at its Gary Works. Today's action finalizes approval of Indiana's 1-hour ozone attainment demonstration SIP revision.

[38 FR 16565, June 22, 1973]

EDITORIAL NOTE: For FEDERAL REGISTER citations affective § 52.777, see the List of Sections Affected, which appears in the Finding Aids section of the printed volume and on GPO Access.

§ 52.778 Compliance schedules.

(a) The requirements of § 51.262(a) of this chapter are not met since the compliance schedules for sources of nitrogen oxides extend over a period of more than 18 months and periodic increments of progress are not included.

(b)–(c) [Reserved]

(d) The compliance schedule for the source identified below is disapproved as not meeting the requirements of subpart N of this chapter. All regulations cited are air pollution control regulations of the State, unless otherwise noted.

Source	Location	Regulation involved	Date schedule adopted
LAKE COUNTY			
Commonwealth Edison Co. of Indiana, Inc. (State Line Station).	Hammond	APC 13	Jan. 18, 1973.

[38 FR 12698 May 14, 1973, as amended at 39 FR 28158, Aug. 5, 1974; 51 FR 40675, 40676, 40677, Nov. 7, 1986; 54 FR 25258, June 14, 1989]

§ 52.779 [Reserved]

§ 52.780 Review of new sources and modifications.

(a) The requirements of § 51.160(a) of this chapter are not met in that the plan does not contain procedures to enable the State to determine whether construction or modification of coal burning equipment having a heat input of between 350,000 Btu per hour and 1,500,000 Btu per hour will result in violations of applicable portions of the control strategy and section 4(a)(2)(iii) of APC–19 is disapproved to the extent that it exempts coal burning equipment having a heat input of between 350,000 Btu per hour and 1,500,000 Btu per hour from pre-construction/modification review.

(b)–(c) [Reserved]

(d) Limited regulation for the review of new sources and modifications. (1) This requirement is applicable to any coal burning equipment other than smokehouse generators, having a heat input of between 350,000 Btu per hour (88.2 Mg–cal/h) and 1,500,000 Btu per hour (378.0 MG cal/h), the construction of which was commenced after May 14, 1973.

(2) No owner or operator shall commence construction or modification of any coal burning equipment subject to this regulation without first obtaining approval from the Administrator of the location and design of such source.

(i) Application for approval to construct or modify shall be made on forms furnished by the Administrator,

(ii) A separate application is required for each source.

(iii) Each application shall be signed by the applicant.

(iv) Each application shall be accompanied by site information, plans, descriptions, specifications, and drawings showing the design of the source, the nature and amount of emissions, and the manner in which it will be operated and controlled.

(v) Any additional information, plans, specifications, evidence, or documentation that the Administrator may require shall be furnished upon request.

(3) No approval to construct or modify will be granted unless the applicant shows to the satisfaction of the Administrator that:

(i) The source will operate without causing a violation of any local, State, or Federal regulation which is part of the applicable plan; and

(ii) The source will not prevent or interfere with attainment or maintenance of any national standard.

(4) (i) Within twenty (20) days after receipt of an application to construct, or any addition to such application, the Administrator shall advise the owner or operator of any deficiency in the information submitted in support of the application. In the event of such a deficiency, the date of receipt of the application for the purpose of paragraph (d)(4)(ii) of this section, shall be the date on which all required information is received by the Administrator.

(ii) Within thirty (30) days after receipt of a complete application, the Administrator shall:

(*a*) Make a preliminary determination whether the source should be approved, approved with conditions, or disapproved.

(*b*) Make available in at least one location in each region in which the proposed source would be constructed, a copy of all materials submitted by the owner or operator, a copy of the Administrator's preliminary determination and a copy or summary of other materials, if any, considered by the Administrator in making his preliminary determination; and

(*c*) Notify the public, by prominent advertisement in a newspaper of general circulation in each region in which the proposed source would be constructed, of the opportunity for written public comment on the information submitted by the owner or operator and the Administrator's preliminary determination on the approvability of the source.

(iii) A copy of the notice required pursuant to this paragraph shall be sent to the applicant and to state and local air pollution control agencies, having cognizance over the location where the source will be situated.

(iv) Public comments submitted in writing within thirty (30) days after the date such information is made available shall be considered by the Administrator in making his final decision on the application. No later than

ten (10) days after the close of the public comment period, the applicant may submit a written response to any comment submitted by the public. The Administrator shall consider the applicant's response in making his final decision. All comments shall be made available for public inspection in at least one location in the region in which the source would be located.

(v) The Administrator shall take final action on an application within thirty (30) days after the close of the public comment period. The Administrator shall notify the applicant in writing of his approval, conditional approval, or denial of the application, and shall set forth his reasons for conditional approval or denial. Such notification shall be made available for public inspection in at least one location in the region in which the source would be located.

(vi) The Administrator may extend each of the time periods specified in paragraph (d)(4) (ii), (iv) or (v) of this section by no more than 30 days, or such other period as agreed to by the applicant and the Administrator.

(5) The Administrator may impose any reasonable conditions upon an approval, including conditions requiring the source to be provided with:

(i) Sampling ports of a size, number, and location as the Administrator may require,

(ii) Safe access to each port,

(iii) Instrumentation to monitor and record emission data, and

(iv) Any other sampling and testing facilities.

(6) The Administrator may cancel an approval if the construction is not begun within 2 years from the date of issuance, or if during the construction, work is suspended for 1 year.

(7) Any owner or operator subject to the provisions of this regulation shall furnish the Administrator written notification as follows:

(i) A notification of the anticipated date of initial startup of a source not more than 60 days or less than 30 days prior to such date.

(ii) A notification of the actual date of initial startup of a source within 15 days after such date.

(8) Within 60 days after achieving the maximum production rate at which the source will be operated but not later than 180 days after initial startup of such source, the owner or operator of such source shall conduct a performance test(s) in accordance with methods and under operating conditions approved by the Administrator and furnish the Administrator a written report of the results of such performance test.

(i) Such test shall be at the expense of the owner or operator.

(ii) The Administrator may monitor such test and may also conduct performance tests.

(iii) The owner or operator of a source shall provide the Administrator 15 days prior notice of the performance test to afford the Administrator the opportunity to have an observer present.

(iv) The Administrator may waive the requirement of performance tests if the owner or operator of a source has demonstrated by other means to the Administrator's satisfaction that the source is being operated in compliance with all local, State, and Federal regulations which are part of the applicable plan.

(9) [Reserved]

(10) Approval to construct or modify shall not relieve any owner or operator of the responsibility to comply with all local, State, and Federal regulations which are part of the applicable plan.

(11) Any owner or operator who constructs, modifies, or operates a stationary source not in accordance with the application, as approved and conditioned by the Administrator, or any owner or operator of a stationary source subject to this paragraph who commences construction or modification without applying for and receiving approval hereunder, shall be subject to enforcement action under section 113 of the Act.

(e) The requirements of subpart I of this chapter are not met because the State failed to submit a plan for review of new or modified indirect sources.

(f) Regulation for review of new or modified indirect sources. The provisions of §52.22(b) are hereby incorporated by reference and made a part of the applicable implementation of the plan for the State of Indiana.

(g) Delegation of authority. (1) The Administrator shall have the authority to delegate responsibility for implementing the procedures for conducting source review pursuant to this section in accordance with paragraphs (f) (2), (3), and (4) of this section.

(2) Where the Administrator delegates the responsibility for implementing the procedures for conducting source review pursuant to this section to any Agency, other than a Regional Office of the Environmental Protection Agency, a copy of the notice pursuant to paragraph (d)(4)(iii) of this section shall be sent to the Administrator through the appropriate Regional Office.

(3) In accordance with Executive Order 11752, the Administrator's authority for implementing the procedures for conducting source review pursuant to this section shall not be delegated, other than to a Regional Office of the Environmental Protection Agency, for new or modified sources which are owned or operated by the Federal Government or for new or modified sources located on Federal lands; except that, with respect to the latter category, where new or modified sources are constructed or operated on Federal lands pursuant to leasing or other Federal agreements, the Federal Land Manager may at his discretion, to the extent permissible under applicable statutes and regulations, require the lessee or permittee to be subject to new source review requirements which have been delegated to a State or local agency pursuant to this paragraph.

(4) The Administrator's authority for implementing the procedures for conducting source review pursuant to this section shall not be redelegated, other than to a Regional Office of the Environmental Protection Agency, for new or modified sources which are located in Indian reservations except where the State has assumed jurisdiction over such land under other laws, in which case the Administrator may delegate his authority to the States in accordance with paragraphs (g) (2), (3), and (4) of this section.

(h) On March 7, 1994, Indiana requested a revision to the State Implementation Plan (SIP) for New Source Review (NSR) to satisfy the requirements of the Clean Air Act Amendments of 1990. The Indiana 326 IAC regulations do not include a definition of "federally enforceable". On July 13, 1994, Pamela Carter, Attorney General of the State of Indiana, sent a letter to USEPA clarifying Indiana's interpretation of the definition of federally enforceable. The letter states that federally enforceable, e.g. as used in 326 IAC 2–3–1, should be interpreted in accordance with the federal definition at 40 CFR 51.165(a)(1)(xiv). The USEPA took the opportunity of rulemaking on the State's submittal to recodify the permitting SIP to conform to Title 326 the Indiana Administrative Code.

[37 FR 10863, May 31, 1972, as amended at 38 FR 12698, May 14, 1973; 39 FR 4663, Feb. 6, 1974; 39 FR 7281, Feb. 25, 1974; 40 FR 50270, Oct. 29, 1975; 51 FR 40677, Nov. 7, 1986; 59 FR 51114, Oct. 7, 1994]

§ 52.781 Rules and regulations.

(a) [Reserved]

(b) A part of the second sentence in section 3, APC–17, which states "Where there is a violation or potential violation of ambient air quality standards, existing emission sources or any existing air pollution control equipment shall comply with th

(c)–(d) [Reserved]

(e) Section 2(d) of APC–20, Fugitive Dust Emissions, is disapproved because it is unenforceable within the terms of the regulation.

(f) Subsections 3(b)(3) and 3(b)(5) of APC–2 (May 18, 1977) are disapproved because they are unenforceable within the terms of the regulation.

[37 FR 10863, May 31, 1972, as amended at 37 FR 15084, July 27, 1972; 38 FR 12698, May 14, 1973; 40 FR 50033, Oct. 28, 1975; 43 FR 26722, June 22, 1978]

§ 52.782 Request for 18-month extension.

(a) The requirements of § 51.341 of this chapter are not met since the request for an 18-month extension for submitting that portion of the plan that implements the secondary standards for particulate matter in the Metropolitan Indianapolis Intrastate Region does not show that attainment of the secondary standards will require emission reductions exceeding those which can be achieved through the application of

reasonably available control technology.

[37 FR 10863, May 31, 1972, as amended at 51 FR 40677, Nov. 7, 1986]

§ 52.783 [Reserved]

§ 52.784 Transportation and land use controls.

(a) To complete the requirements of subpart L and subpart G of this chapter, the Governor of Indiana must submit to the Administrator:

(1) No later than April 15, 1973, transportation and/or land use control strategies and a demonstration that said strategies, along with Indiana's presently adopted stationary source emission limitations for carbon monoxide and hydrocarbons and the Federal Motor Vehicle Control Program, will attain and maintain the national standards for carbon monoxide and photochemical oxidants (hydrocarbons) in the Metropolitan Indianapolis Intrastate Region by May 31, 1975. By such date (April 15, 1973), the State also must submit a detailed timetable for implementing the legislative authority, regulations, and administrative policies required for carrying out the transportation and/or land use control strategies by May 31, 1975.

(2) No later than July 30, 1973, the legislative authority that is needed for carrying out such strategies.

(3) No later than December 30, 1973, the necessary adopted regulations and administrative policies needed to implement such strategies.

[38 FR 7326, Mar. 20, 1973, as amended at 51 FR 40676, Nov. 7, 1986]

§ 52.785 Control strategy: Carbon monoxide.

(a) The requirements of subpart G of this chapter are not met because the plan does not provide for attainment and maintenance of the national standards for carbon monoxide in the Metropolitan Indianapolis Intrastate Region by May 31, 1975.

(b) On December 21, 1999, the Indiana Department of Environmental Management submitted carbon monoxide maintenance plans for those portions of Lake and Marion Counties which they requested the Environmental Protection Agency redesignate to attainment of the carbon monoxide national ambient air quality standard.

[38 FR 16565, June 22, 1973, as amended at 51 FR 40676, Nov. 7, 1986; 65 FR 2888, Jan. 19, 2000]

§ 52.786 Inspection and maintenance program.

(a) Definitions:

(1) *Inspection and maintenance program* means a program to reduce emissions from in-use vehicles through identifying vehicles that need emission control related maintenance and requiring that such maintenance be performed.

(2) *Light-duty vehicle* means a motor vehicle rated at 6,000 lb. GVW (gross vehicle weight) or less.

(3) All other terms used in this section that are defined in part 51, subpart G of this chapter, are used herein with the meanings so defined.

(b) This regulation is applicable in the County of Marion, Indiana (including all cities, towns and municipal corporations therein).

(c) The State of Indiana shall establish and cause the implementation of an inspection and maintenance program applicable to all gasoline-powered light duty vehicles which are registered in Marion County. Such program shall conform with this § 52.786. The Consolidated City of Indianapolis, the County of Marion, and other municipalities within the County of Marion, shall take all legislative, executive, or other action necessary to establish and implement the program required by this regulation.

(d) Not later than April 1, 1975, the State of Indiana, the County of Marion and the Consolidated City of Indianapolis shall jointly submit to the Administrator, for his approval, legally adopted legislation and/or regulations establishing the regulatory scheme for the inspection/maintenance program required by paragraph (c) of this section. The legislation and/or regulations shall include:

(1) Provisions requiring inspection of all light-duty motor vehicles subject to the inspection program required by paragraph (c) of this section at periodic intervals no more than 1 year apart by means of an idle test. Any class or category of vehicles that are found to be

rarely used on public streets and highways (such as classic or antique vehicles) may be exempted.

(2) Provisions for regulatory criteria that are consistent with achieving an 11 percent reduction of hydrocarbon emissions from light-duty vehicles.

(3) Provisions ensuring that failed vehicles receive, within 30 days, the maintenance necessary to achieve compliance with the inspection standards. These provisions shall impose sanctions against owners of non-complying vehicles, require retest of failed vehicles following maintenance, require a suitable distinctive tag or sticker for display on complying vehicles, and include such other measures as are necessary or appropriate.

(4) Provisions establishing a certification program to ensure that testing stations performing the required tests have the necessary equipment and knowledgeable operators to perform the tests satisfactorily, imposing sanctions against non-complying testing stations, and containing such other measures as necessary or appropriate to a testing program.

(5) Provisions prohibiting vehicles from being intentionally readjusted or modified subsequent to the inspection and/or maintenance in such a way as would cause them no longer to comply with the inspection standards. These may include authorization of spot checks of idle adjustments or of a suitable type of physical seal or tag on vehicles. These provisions shall include appropriate penalties for violation by any person.

(6) Designation of agency or agencies responsible for conducting, overseeing, and enforcing the inspection/maintenance program. Private parties may be designated to conduct parts of the program to certify compliance.

(e) After July 1, 1976, the State of Indiana, County of Marion, the Consolidated City of Indianapolis, and other municipalities in Marion County shall not allow the operation on streets, roads, or highways under their ownership or control of any light duty motor vehicle subject to the inspection program established pursuant to paragraph (c) of this section that does not comply with the applicable standards and procedures adopted in accordance with paragraph (d) of this section.

(f) After July 1, 1976, no person shall operate or allow the operation of any motor vehicle subject to the inspection program established pursuant to paragraph (c) of this section that does not comply with the applicable standards and procedures adopted in accordance with paragraph (d) of this section.

(g) No later than October 1, 1974, the State of Indiana, County of Marion, and the Consolidated City of Indianapolis shall jointly submit to the Administrator, for his approval, a detailed compliance schedule showing the steps they will take to establish, operate and enforce the inspection program required by paragraph (c) of this section including:

(1) A detailed description of the inspection program required by paragraph (c) of this section (including a description of the way in which the program will be established, operated, and enforced and the respective responsibilities of the State, county, and municipalities for such tasks).

(2) A description of the legal authority for establishing and enforcing the inspection/maintenance program, including the text of proposed or adopted legislation and regulations.

(3) Specific dates (day, month, and year) by which various steps to implement the inspection/maintenance system will be completed, such steps to include, at a minimum, the following: submitting final plans and specifications for the system to the Administrator for this approval (this date to be no later than February 1, 1975), ordering necessary equipment (this date to be no later than April 15, 1975), commencement of onsite construction and/or installation, and system operational (this date to be no later than April 15, 1975, commencement of onsite construction and/ior installation, and system operational (this date to be no later than July 1, 1975).

(4) An identification of the sources and amounts of funds necessary to implement the system together with written assurances from the chief executive officers of the State, city, and county that they will seek such necessary funding from the appropriate legislative bodies.

(5) Other provisions necessary or appropriate to carry out the program.

(h) The State's December 2, 1992, commitment to timely adopt and implement enhanced inspection and maintenance (I/M) rules for Lake and Porter Counties is disapproved based on the failure of the State of Indiana to meet important milestones pertaining to the development and adoption of necessary authority for the I/M program. This disapproval initiates the sanction process of section 179(a) of the Act.

[39 FR 12348, Apr. 5, 1974, as amended at 46 FR 38, Jan. 2, 1981; 51 FR 40677, Nov. 7, 1986; 55 FR 31052, July 31, 1990; 58 FR 62535, Nov. 29, 1993]

§ 52.787 Gasoline transfer vapor control.

(a) *Gasoline* means any petroleum distillate having a Reid vapor pressure of 4 pounds or greater.

(b) This section is applicable in the County of Marion, Indiana (including all cities, towns and municipal corporations therein).

(c) No person shall transfer or permit the transfer of gasoline from any delivery vessel into any stationary source container with a capacity greater than 250 gallons unless such container is equipped with a submerged fill pipe and unless the displaced vapors from the storage container are processed by a control system that prevents release to the atmosphere of no less than 90 percent by weight of organic compounds in said vapors displaced from the stationary storage container location. The control system shall include one or more of the following:

(1) A vapor-tight return line from the storage container to the delivery vessel and a system that will ensure that the vapor return line is connected before gasoline can be transferred into the container. If a "vapor-balance return" system is used to meet the requirements of this section, the system shall be so constructed as to be readily adapted to retrofit with an adsorption system, refrigeration-condensation system or equivalent system connected to the stationary storage container.

(2) Refrigeration-condensation system or adsorption system connected to the stationary storage container.

(3) An equivalent system, approved by the Administrator or his designee, designed to recover or eliminate no less than 90 percent by weight of the organic compounds in the displaced vapor.

(d) No person shall own or operate a delivery vessel containing gasoline unless the delivery vessel is so designed and maintained as to be vapor-tight at all times. This paragraph (d) shall not apply to delivery vessels in transit through Marion County which neither are filled nor deliver gasoline therein, nor shall this paragraph (d) be construed to prohibit safety-valves on other devices required by governmental safety regulations. Delivery vessels which are filled in Marion County but do not deliver in Marion County may be controlled only for filling.

(e) No person shall own or operate a facility for the filling of delivery vessels with gasoline unless the facility is equipped with a control system, which can recover or eliminate at least 90 percent by weight of the organic compounds in the vapors displaced from the delivery vessel during refilling. Facilities which have a daily throughput of 20,000 gallons or less are required to have a vapor recovery system in operation no later than May 31, 1977. Delivery vessels and storage containers served exclusively by facilities required to have a vapor recovery system in operation no later than May 31, 1977, also will be required to meet the provisions of this section no later than May 31, 1977.

(f) After March 1, 1976, no person shall intentionally release gasoline vapors from a delivery vessel, except to a control system that can recover or eliminate at least 90 percent by weight of organic compounds in the vapors released.

(g) The provisions of paragraph (c) of this section shall not apply to the following:

(1) Stationary containers having a capacity less than 550 gallons used exclusively for the fueling of farming equipment.

(2) Any stationary container having a capacity less than 2,000 gallons installed prior to promulgation of this paragraph.

(3) Transfer made to storage tanks equipped with floating roofs or their equivalent.

(4) Gasoline storage compartments of 1,000 gallons or less in gasoline delivery vessels in use on the promulgated date of this regulation will not be required to be retrofitted with a vapor return system until January 1, 1977.

(h) The operation of a source, otherwise, subject to paragraph (c), (d), or (e) of this section, shall not be a violation of paragraph (c), (d), or (e), respectively, if the following acts shall be completed with respect to such source before the following dates:

(1) October 1, 1974. The owner of the source or his designee shall submit to the Administrator, a final control plan, which describes at a minimum the steps that will be taken by the source to achieve compliance with the applicable provisions of paragraphs (c), (d), and (e) of this section.

(2) March 1, 1975. Negotiate and sign all necessary contracts for control systems, or issue orders for the purchase of component parts to accomplish emission control.

(3) May 1, 1975. Initiate on-site construction or installation of control system equipment.

(4) February 1, 1976. Complete on-site construction or installation of control system equipment.

(5) March 1, 1976. Achieve final compliance with the applicable provisions of paragraphs (c), (d), and (e) of this section.

(6) Any owner of a source subject to the compliance schedule in this paragraph shall certify to the Administrator, within 5 days after the deadline for each increment of progress, whether or not the required increment of progress has been met.

(i) As an alternative to compliance with the schedule under paragraph (h) of this section:

(1) The owner of a source which is in compliance with the provisions of paragraph (c), (d), or (e) of this section, shall certify such compliance to the Administrator by October 1, 1974. The Administrator may request whatever supporting information he considers necessary for proper certification.

(2) A source for which a compliance schedule is adopted by the State and approved by the Administrator may operate in conformity with such compliance schedule.

(3) The owner of a source may submit to the Administrator, by October 1, 1974, a proposed alternative compliance schedule. No such schedule may provide for compliance after March 1, 1976. Until promulgated by the Administrator, such source shall conform with applicable portions of paragraph (c), (d), (e), or (h) of this section. Upon promulgation of the compliance schedule by the Administrator, no person shall own or operate the source except in conformity with the promulgated schedule.

(j) Nothing in this section shall preclude the Administrator from promulgating a separate schedule for any source to which the application of the compliance schedule in paragraph (h) of this section fails to satisfy the requirements of § 51.15 (b) and (c) of this chapter.

(k) Any new container, facility, or vessel subject to this regulation that is placed in operation after October 1, 1974, shall within 30 days of commencing operation submit a compliance schedule in conformity with paragraph (i) of this section and shall otherwise comply with this section. Any facility subject to this regulation that is placed in operation after March 1, 1976, shall comply with the applicable requirements of this section immediately upon commencing operation.

[39 FR 12349, Apr. 5, 1974, as amended at 39 FR 41253, Nov. 26, 1974; 41 FR 56643, Dec. 29, 1976; 42 FR 29004, June 7, 1977]

§ 52.788 Operating permits.

Emission limitations and other provisions contained in operating permits issued by the State in accordance with the provisions of the federally approved permit program shall be the applicable requirements of the federally approved State Implementation Plan (SIP) for Indiana for the purpose of sections 112(b) and 113 of the Clean Air Act and shall be enforceable by the United States Environmental Protection Agency (USEPA) and any person in the same manner as other requirements of the SIP. USEPA reserves the right to deem an operating permit not federally enforceable. Such a determination will

be made according to appropriate procedures, and be based upon the permit, permit approval procedures or permit requirements which do not conform with the operating permit program requirements or the requirements of USEPA's underlying regulations.

[60 FR 43012, Aug. 18, 1995]

§§ 52.789–52.792 [Reserved]

§ 52.793 Significant deterioration of air quality.

(a) The requirements of sections 160 through 165 of the Clean Air Act are not met, since the plan does not include approvable procedures for preventing the significant deterioration of air quality.

(b) *Regulations for preventing significant deterioration of air quality*. The provisions of § 52.21(a)(2) and (b) through (bb) are hereby incorporated and made a part of the applicable state plan for the State of Indiana.

(c) All applications and other information required pursuant to § 52.21 from sources located in the State of Indiana shall be submitted to the Commissioner, Indiana Department of Environmental Management, 105 South Meridian Street, P.O. Box 6015, Indianapolis, IN 46206.

[45 FR 52741, Aug. 7, 1980, as amended at 53 FR 18985, May 26, 1988; 68 FR 11323, Mar. 10, 2003]

§ 52.794 Source surveillance.

(a) The requirements of 51.212 of this chapter are not met by the phrase "for more than a cumulative total of 15 minutes in a 24-hour period" contained in section 1 of APC–3 of the Indiana Air Pollution Control Regulations.

(b) [Reserved]

(c) 325 IAC 5–1 (October 6, 1980, submittal—§ 52.770(c)(53)) is disapproved for the Lake County sources specifically listed in Table 2 of 325 IAC 6–1–10.2 (§ 52.770(c)(57)); for pushing and quenching sources throughout the State (August 27, 1981, 325 IAC 11–3–2 (g) and (h)—§ 52.770(c)(42)); and for coke oven doors in Lake and Marion Counties (325 IAC 11–3–2(f)—§ 52.770(c)(42)). Applicability of this regulation to these sources is being disapproved because 325 IAC 5–1 does not meet the enforceability requirements of § 51.22 as it applies to these sources. Opacity limits in 325 IAC 6–1–10.2 and certain opacity limits in 325 IAC 11–3 supersede those in 325 IAC 5–1, and USEPA has previously disapproved these superseding regulations (§ 52.776 (j), (g), and (f), respectively).

[40 FR 50033, Oct. 28, 1975; 41 FR 3475, Jan. 23, 1976, as amended at 48 FR 55860, Dec. 16, 1983; 51 FR 40676, 40677, Nov. 7, 1986; 52 FR 3644, Feb. 5, 1987; 52 FR 23038, June 17, 1987]

§ 52.795 Control strategy: Sulfur dioxide.

(a) Revised APC–13 (December 5, 1974 submission) of Indiana's Air Pollution Control regulations (sulfur dioxide emission limitation) is disapproved insofar as the provisions identified below will interfere with the attainment and maintenance of the suffix dioxide ambient air quality standards:

(1) The phrase "equivalent full load" in section 1(b)(2).

(2) The formula "$E_p=17.0\ Q_m^{0.67}$ where $E_p=E_m \times Q_m$" in section 2(a).

(3) The phrase "Direct fired process operations" in sections 2(a), 3(c), 4(b), and 4(c).

(4) The modification of Q_m for non-Indiana coal as expressed in Section 2(a).

(b) The requirements of § 51.281 are not met by Warrick and Culley electrical generating stations enforcement orders which would revise the sulfur dioxide emission limitations for these two stations.

(c) The requirements of § 51.110(e) are not met by Wayne, Dearborn, Jefferson, Porter, and Warrick Counties.

(d)—(e) [Reserved]

(f) Approval—On March 14, 1996, the State of Indiana submitted a maintenance plan for Lawrence, Washington, and Warren Townships in Marion County and the remainder of the county, and requested that it be redesignated to attainment of the National Ambient Air Quality Standard for sulfur dioxide. The redesignation request and maintenance plan satisfy all applicable requirements of the Clean Air Act.

(g) Approval—On June 17, 1996, the State of Indiana submitted a maintenance plan for LaPorte, Vigo, and Wayne Counties and requested redesignation to attainment for the National

Ambient Air Quality Standard for sulphur dioxide for each county in its entirety. The redesignation requests and maintenance plans satisfy all applicable requirements of the Clean Air Act.

[41 FR 35677, Aug. 24, 1976, as amended at 42 FR 34519, July 6, 1977; 47 FR 10825, Mar. 12, 1982; 47 FR 39168, Sept, 7 1982; 49 FR 585, Jan. 5, 1984; 51 FR 40676, 40677, Nov. 7, 1986; 53 FR 1358, Jan. 19, 1988; 54 FR 2118, Jan. 19, 1989; 61 FR 58486, Nov. 15, 1996]

§ 52.796 Industrial continuous emission monitoring.

(a) APC–8, Appendix I 1.2.3, 3.3, and 6.0 are disapproved because they do not meet the requirements of 40 CFR 51.214.

(b)(1) The requirements of 40 CFR 51, Appendix P 3.3 are hereby incorporated and made a part of the applicable implementation plan for the State of Indiana.

(2) APC–8 does not apply to any source scheduled for retirement by October 6, 1980, or within five years after the promulgation of continuous emission monitoring requirements for that source category in 40 CFR part 51, Appendix P 1.1, provided that adequate evidence and guarantees are provided that clearly show that the source will cease operations on or before such date.

[43 FR 26722, June 22, 1978, as amended at 51 FR 40677, Nov. 7, 1986]

§ 52.797 Control strategy: Lead.

(a)–(b) [Reserved]

(c) On January 12, 1988, Indiana'a Office of Air Management (OAM), Indiana Department of Environmental Management, agreed to review all relevant hood designs and performance guidance to determine which criteria to use in determining ongoing compliance with the capture efficiency provisions in 326 IAC 15–1 for Quemetco, Inc., and Refined Metals. Because these efficiencies are closely related to equipment design, OAM believes that a review of the process and control equipment designs and operating paramenters should provide the necessary determination of compliance. OAM will work with the Indianapolis local agency, the Indianapolis Air Pollution Control Division, on viable alternatives and will keep USEPA up to date on its progress. OAM anticipates that specific criteria for determining compliance will be incorporated into the sources' operation permits (and forwarded to USEPA for informational purposes), and, should the opportunity arise, 326 IAC 15–1 will be revised to similarly incorporate capture efficiency criteria.

(d) On March 2, 2000, Indiana submitted a maintenance plan for Marion County as part of its request to redesignate the County to attainment of the lead standard.

[53 FR 12905, Apr. 19, 1988, as amended at 53 FR 38722, Oct. 3, 1988; 54 FR 33896, Aug. 17, 1989; 65 FR 29963, May 10, 2000]

§ 52.798 Small business stationary source technical and environmental compliance assistance program.

The Indiana program submitted on January 14, 1993, as a requested revision to the Indiana State Implementation Plan satisfies the requirements of section 507 of the Clean Air Act Amendments of 1990.

[58 FR 46544, Sept. 2, 1993]

Subpart Q—Iowa

§ 52.820 Identification of plan.

(a) *Purpose and scope.* This section sets forth the applicable SIP for Iowa under section 110 of the CAA, 42 U.S.C. 7401, and 40 CFR part 51 to meet NAAQS.

(b) *Incorporation by reference.* (1) Material listed in paragraphs (c), (d), and (e) of this section with an EPA approval date prior to July 1, 1998, was approved for incorporation by reference by the Director of the Federal Register in accordance with 5 U.S.C. 552(a) and 1 CFR part 51. Material is incorporated as it exists on the date of the approval, and notice of any change in the material will be published in the FEDERAL REGISTER. Entries in paragraphs (c), (d), and (e) of this section with the EPA approval dates after July 1, 1998, will be incorporated by reference in the next update to the SIP compilation.

(2) EPA Region VII certifies that the rules/regulations provided by the EPA in the SIP compilation at the addresses in paragraph (b)(3) are an exact duplicate of the officially promulgated state

rules/regulations which have been approved as part of the SIP as of July 1, 1998.

(3) Copies of the materials incorporated by reference may be inspected at the Environmental Protection Agency, Region VII, Air Planning and Development Branch, 726 Minnesota Avenue, Kansas City, Kansas 66101; at the EPA Air and Radiation Docket and Information Center, Air Docket (6102), 401 M St., SW., Washington, DC. 20460; or at the National Archives and Records Administration (NARA). For information on the availability of this material at NARA, call 202–741–6030, or go to: *http://www.archives.gov/federal_register/code_of_federal_regulations/ibr_locations.html.*

(c) *EPA-approved regulations.*

EPA-APPROVED IOWA REGULATIONS

Iowa citation	Title	State effective date	EPA approval date	Comments
	Iowa Department of Natural Resources, Environmental Protection Commission [567]			
	Chapter 20—Scope of Title-Definitions-Forms-Rule of Practice			
567–20.1	Scope of Title	5/13/98	5/22/00, 65 FR 32031	
567–20.2	Definitions	7/21/99	3/4/02, 67 FR 9593	The definitions for anaerobic lagoon, odor, odorous substance, and odorous substance source, are not SIP approved.
567–20.3	Air Quality Forms Generally	4/24/02	3/7/03, 68 FR 10971	
	Chapter 21—Compliance			
567–21.1	Compliance Schedule	3/14/90	6/29/90, 55 FR 26690	
567–21.2	Variances	7/21/99	3/04/02, 67 FR 9593	
567–21.3	Emission Reduction Program	3/14/90	6/29/90, 55 FR 26690	
567–21.4	Circumvention of Rules	3/14/90	6/29/90, 55 FR 26690	
567–21.5	Evidence Used in Establishing That a Violation Has or Is Occurring.	11/16/94	10/30/95, 60 FR 55198	
	Chapter 22—Controlling Pollution			
567–22.1	Permits Required for New or Existing Stationary Sources.	7/17/02	3/7/03, 68 FR 10971	Subrules 22.1(2), 22.1(2) "g," 22.1(2) "i" have a state effective date of 5/23/01.
567–22.2	Processing Permit Applications	4/9/97	6/25/98, 63 FR 34600	
567–22.3	Issuing Permits	4/24/02	3/7/03, 68 FR 10971	Subrule 22.3(6) is not SIP approved.
567–22.4	Special Requirements for Major Stationary Sources Located in areas Designated Attainment or Unclassified (PSD).	3/14/01	3/04/02, 67 FR 9593.	
567–22.5	Special Requirements for Nonattainment Areas.	7/21/99	3/04/02, 67 FR 9593	
567–22.8	Permit by Rule	7/21/99	3/04/02, 67 FR 9593	
567–22.105	Title V Permit Applications	11/16/94	10/30/95, 60 FR 55198	Only subparagraph (2)i(5) is included in the SIP.
567–22.200	Definitions for Voluntary Operating Permits	10/18/95	4/30/96, 61 FR 18958	
567–22.201	Eligibility for Voluntary Operating Permits	4/24/02	3/7/03, 68 FR 10971	
567–22.202	Requirement to Have a Title V Permit	4/9/97	6/25/98, 63 FR 34601	
567–22.203	Voluntary Operating Permit Applications	10/14/98	3/04/02, 67 FR 9593	
567–22.204	Voluntary Operating Permit Fees	12/14/94	4/30/96, 61 FR 18958	
567–22.205	Voluntary Operating Permit Processing Procedures.	12/14/94	4/30/96, 61 FR 18958	
567–22.206	Permit Content	10/18/95	4/30/96, 61 FR 18958	
567–22.207	Relation to Construction Permits	12/14/94	4/30/96, 61 FR 18958	
567–22.208	Suspension, Termination, and Revocation of Voluntary Operating Permits.	12/14/94	4/30/96, 61 FR 18958	
567–22.300	Operating Permit by Rule for Small Sources ...	4/24/02	3/7/03, 68 FR 10971	Subrule 22.300(7) "c" has a state effective date of 10/14/98.
	Chapter 23—Emission Standards for Contaminants			
567–23.1	Emission Standards	10/14/98	5/22/00, 65 FR 32031	Subrules 23.1(2)–(5) are not SIP approved.

EPA-APPROVED IOWA REGULATIONS—Continued

Iowa citation	Title	State effective date	EPA approval date	Comments
567–23.2	Open Burning	5/13/98	5/22/00, 65 FR 32031	
567–23.3	Specific Contaminants	7/21/99	3/04/02, 67 FR 9593	Subrule 23.3(2) has a state effective date of 5/13/98. Subrule 23.3(3)"(d)" is not SIP approved.
567–23.4	Specific processes	7/21/99	3/04/02, 67 FR 9593	Subrule 23.4(10) is not SIP approved.
Chapter 24—Excess Emissions				
567–24.1	Excess Emission Reporting	5/13/98	5/22/00, 65 FR 32031	
567–24.2	Maintenance and Repair Requirements	3/14/90	6/29/90, 55 FR 26690	
Chapter 25—Measurement of Emissions				
567–25.1	Testing and Sampling of New and Existing Equipment.	4/24/02	3/7/03, 68 FR 10971	
Chapter 26—Prevention of Air Pollution Emergency Episodes				
567–26.1	General	3/14/90	6/29/90, 55 FR 26690	
567–26.2	Episode Criteria	3/14/90	6/29/90, 55 FR 26690	
567–26.3	Preplanned Abatement Strategies	3/14/90	6/29/90, 55 FR 26690	
567–26.4	Actions During Episodes	3/14/90	6/29/90, 55 FR 26690	
Chapter 27—Certificate of Acceptance				
567–27.1	General	3/14/90	6/29/90, 55 FR 26690	
567–27.2	Certificate of Acceptance	3/14/90	6/29/90, 55 FR 26690	
567–27.3	Ordinance or Regulations	3/14/90	6/29/90, 55 FR 26690	
567–27.4	Administrative Organization	3/14/90	6/29/90, 55 FR 26690	
567–27.5	Program Activities	3/14/90	6/29/90, 55 FR 26690	
Chapter 28—Ambient Air Quality Standards				
567–28.1	Statewide Standards	3/14/90	6/29/90, 55 FR 26690	
Chapter 29—Qualification in Visual Determination of the Opacity of Emissions				
567–29.1	Methodology and Qualified Observer	5/13/98	5/22/00, 65 FR 32031	
Chapter 31—Nonattainment Areas				
567–31.1	Permit Requirements Relating to Nonattainment Areas.	2/22/95	10/23/97, 62 FR 55172	
567–31.2	Conformity of General Federal Actions to the Iowa SIP or Federal Implementation Plan.	5/13/98	5/22/00, 65 FR 32031	
Linn County				
CHAPTER 10.	Linn County Code of Ordinance Providing for Air Quality Chapter 10.	3/7/97	2/2/98, 63 FR 5268	
Polk County				
Chapter V	Polk County Board of Health Rules and Regulations Air Pollution Chapter V.	4/15/98 10/4/00	1/9/04, 69 FR 1538	Article I, Section 5–2, definition of "variance"; Article VI, Sections 5–16(n), (o) and (p); Article VIII, Article IX, Sections 5–27(3) and (4), Article XIII, and Article XVI, Section 5–75(b) are not a part of the SIP.

(d) *EPA-approved State source-specific orders/permits.*

EPA-APPROVED IOWA SOURCE-SPECIFIC ORDERS/PERMITS

Name of source	Order/permit No.	State effective date	EPA approval date	Comments
Archer-Daniels Midland Company	90–AQ–10	3/25/91	11/1/91, 56 FR 56158	
Interstate Power Company	89–AQ–04	2/21/90	11/1/91, 56 FR 56158	
Grain Processing Corporation	74–A–015–S	9/18/95	12/1/97, 62 FR 63454	
Grain Processing Corporation	79–A–194–S	9/18/95	12/1/97, 62 FR 63454	
Grain Processing Corporation	79–A–195–S	9/18/95	12/1/97, 62 FR 63454	
Grain Processing Corporation	95–A–374	9/18/95	12/1/97, 62 FR 63454	
Muscatine Power and Water	74–A–175–S	9/14/95	12/1/97, 62 FR 63454	
Muscatine Power and Water	95–A–373	9/14/95	12/1/97, 62 FR 63454	
Monsanto Corporation	76–A–161S3	7/18/96	12/1/97, 62 FR 63454	
Monsanto Corporation	76–A–265S3	7/18/96	12/1/97, 62 FR 63454	
IES Utilities, Inc.	98–AQ–20	11/20/98	3/11/99 64 FR 12090	SO_2 Control Plan for Cedar Rapids, Iowa.
Archer-Daniels-Midland Corporation	SO_2 Emission Control Plan	9/14/98	3/11/99 64 FR 12090	ADM Corn Processing SO_2 Control Plan for Cedar Rapids.
Linwood Mining and Minerals Corporation.	98–AQ–07	3/13/98	3/18/99, 64 FR 13346	PM_{10} control plan for Buffalo.
Lafarge Corporation	98–AQ–08	3/19/98	3/18/99, 64 FR 13346	PM_{10} control plan for Buffalo.
Holnam, Inc	A.C.O. 1999-AQ–31	9/2/99	11/06/02, 67 FR 67565	For a list of the 47 permits issued for individual emission points see IDNR letters to Holnam, Inc., dated 7/24/01.
Holnam, Inc	Consent Amendment to A.C.O. 1999–AQ–31	5/16/01	11/06/02, 67 FR 67565	For a list of the 47 permits issued for individual emission points see IDNR letters to Holnam, Inc., dated 7/24/01.
Holnam, Inc	Permits for 17–01–009, Project Nos. 99–511 and 00–468	7/24/01	11/06/02, 67 FR 67565	For a list of the 47 permits issued for individual emission points see IDNR letters to Holnam, Inc., dated 7/24/01.
Lehigh Portland Cement Company	A.C.O. 1999–AQ–32	9/2/99	11/06/02, 67 FR 67565	For a list of the 41 permits issued for individual emission points see IDNR letters to Lehigh dated 7/24/01 and 2/18/02.
Lehigh Portland Cement Company	Permits for plant No. 17–01–005, Project Nos. 99–631 and 02–037	2/18/02	11/06/02, 67 FR 67565	For a list of the 41 permits issued for individual emission points see IDNR letters to Lehigh dated 7/24/01 and 2/18/02.

(e) *The EPA approved nonregulatory provisions and quasi-regulatory measures.*

EPA-APPROVED IOWA NONREGULATORY PROVISIONS

Name of nonregulatory SIP provision	Applicable geographic or nonattainment area	State submittal date	EPA approval date	Comments
Air Pollution Control Implementation Plan	Statewide	1/27/72	5/31/72, 37 FR 10842	
Request for a Two Year Extension to Meet the NAAQS.	Council Bluffs	1/27/72	5/31/72, 37 FR 10842	Correction notice published 3/2/76.
Revisions to Appendices D and G	Statewide	2/2/72	5/31/72, 37 FR 10842	Correction notice published 3/2/76.

EPA-APPROVED IOWA NONREGULATORY PROVISIONS—Continued

Name of nonregulatory SIP provision	Applicable geographic or nonattainment area	State submittal date	EPA approval date	Comments
Source Surveillance and Record Maintenance Statements.	Statewide	4/14/72	3/2/76, 41 FR 8960	
Statement Regarding Public Availability of Emissions Data.	Statewide	5/2/72	3/2/76, 41 FR 8960	
Letter Describing the Certificates of Acceptance for Local Air Pollution Control Programs.	Linn County, Polk County.	12/14/72	10/1/76, 41 FR 43407	
High Air Pollution Episode Contingency Plan.	Statewide	6/20/73	10/1/76, 41 FR 43407	
Summary of Public Hearing on Revised Rules Which Were Submitted on July 17, 1975.	Statewide	9/3/75	10/1/76, 41 FR 43407	
Air Quality Modeling to Support Sulfur Dioxide Emission Standards.	Statewide	3/4/77	6/1/77, 42 FR 27892	
Nonattainment Plans	Mason City, Davenport, Cedar Rapids, Des Moines.	6/22/79	3/6/80, 45 FR 14561	
Information on VOC Sources to Support the Nonattainment Plan.	Linn County	10/8/79	3/6/80, 45 FR 14561	
Information and Commitments Pertaining to Legally Enforceable RACT Rules to Support the Nonattainment Plan.	Linn County	11/16/79	3/6/80, 45 FR 14561	
Lead Plan	Statewide	8/19/80	3/20/81, 46 FR 17778	
Letter to Support the Lead Plan	Statewide	1/19/81	3/20/81, 46 FR 17778	
Nonattainment Plans to Attain Secondary Standards.	Mason City, Cedar Rapids, Des Moines, Davenport, Keokuk, Council Bluffs, Fort Dodge, Sioux City, Clinton, Marshalltown, Muscatine, Waterloo.	4/18/80	4/17/81, 46 FR 22372	
Information to Support the Particulate Matter Nonattainment Plan.	Mason City, Cedar Rapids, Des Moines, Davenport, Keokuk, Council Bluffs, Fort Dodge, Sioux City, Clinton, Marshalltown, Muscatine, Waterloo.	9/16/80	4/17/81, 46 FR 22372	
Information to Support the Particulate Matter Nonattainment Plan.	Mason City, Cedar Rapids, Des Moines, Davenport, Keokuk, Council Bluffs, Fort Dodge, Sioux City, Clinton, Marshalltown, Muscatine, Waterloo.	11/17/80	4/17/81, 46 FR 22372	
Schedule for Studying Nontraditional Sources of Particulate Matter and for Implementing the Results.	Mason City, Cedar Rapids, Des Moines, Davenport, Keokuk, Council Bluffs, Fort Dodge, Sioux City, Clinton, Marshalltown, Muscatine, Waterloo.	6/26/81	3/5/82, 47 FR 9462	
Air Monitoring Strategy	Statewide	7/15/81	4/12/82, 47 FR 15583	
Letter of Commitment to Revise Unapprovable Portions of Chapter 22.	Statewide	5/14/85	9/12/85, 50 FR 37176	

EPA-APPROVED IOWA NONREGULATORY PROVISIONS—Continued

Name of nonregulatory SIP provision	Applicable geographic or nonattainment area	State submittal date	EPA approval date	Comments
Letter of Commitment to Submit Stack Height Regulations and to Implement the EPA's Regulations until the State's Rules Are Approved.	Statewide	4/22/86	7/11/86, 51 FR 25199	
Letter of Commitment to Implement the Stack Height Regulations in a Manner Consistent with the EPA's Stack Height Regulations with Respect to NSR/PSD Regulations.	Statewide	4/22/87	6/26/87, 52 FR 23981	
PM_{10} SIP	Statewide	10/28/88	8/15/89, 54 FR 33536	
Letter Pertaining to NO_X Rules and Analysis Which Certifies the Material Was Adopted by the State on October 17, 1990.	Statewide	11/8/90	2/13/91, 56 FR 5757	
SO_2 Plan	Clinton	3/13/91	11/1/91, 56 FR 56158	
Letter Withdrawing Variance Provisions	Polk County	10/23/91	11/29/91, 56 FR 60924	Correction notice published 1/26/93.
Letter Concerning Open Burning Exemptions.	Statewide	10/3/91	1/22/92, 57 FR 2472	
Compliance Sampling Manual	Statewide	1/5/93	5/12/93, 58 FR 27939	
Small Business Assistance Plan	Statewide	12/22/92	9/27/93, 58 FR 50266	
Voluntary Operating Permit Program	Statewide	12/8/94, 2/16/96, 2/27/96	4/30/96, 61 FR 18958	
SO_2 Plan	Muscatine	6/19/96, 5/21/97	12/1/97, 62 FR 63454	
SO_2 Maintenance Plan	Muscatine	4/25/97	3/19/98, 63 FR 13343	
SO_2 Control Plan	Cedar Rapids	9/11/98	3/11/99, 64 FR 12090	
PM_{10} control plan	Buffalo, Iowa	10/1/98	03/18/99, 64 FR 13346	

[64 FR 7094, Feb. 12, 1999, as amended at 64 FR 12090, Mar. 11, 1999; 64 FR 13345, Mar. 18, 1999; 64 FR 17550, Apr. 12, 1999; 64 FR 68292, Dec. 7, 1999; 65 FR 9222, Feb. 24, 2000; 65 FR 32031, May 22, 2000; 67 FR 9593, Mar. 4, 2002; 67 FR 62891, Oct. 9, 2002; 67 FR 67565, Nov. 6, 2002; 68 FR 10971, Mar. 7, 2003; 68 FR 58022, Oct. 8, 2003; 68 FR 62501, Nov. 4, 2003; 69 FR 1538, Jan. 9, 2004; 69 FR 2967, Jan. 21, 2004]

EFFECTIVE DATE NOTE: At 69 FR 32456, June 10, 2004, § 52.820(d) was amended by adding entries at the end of the table for Blackhawk Foundry and Machine Company in Davenport, Iowa, effective Aug. 9, 2004. For the convenience of the user, the added text follows:

§ 52.820 Identification of plan.

* * * * *

(d) EPA-approved State source-specific orders/permits.

EPA-APPROVED IOWA SOURCE-SPECIFIC ORDERS/PERMITS

Name of source	Order/permit No.	State effective date	EPA approval date	Comments
*	*	*	*	*
Blackhawk Foundry and Machine Company.	A.C.O. 03–AQ–51	12/4/2003	6/10/04, 68 FR 32456.	Together with the permits listed below this order comprises the PM_{10} control strategy for Davenport, Iowa.
Blackhawk Foundry and Machine Company.	Permit No. 02–A–116 (Cold Box Core Machine).	8/19/02	6/10/04, 68 FR 32456.	Provisions of the permit that relate to pollutants other than PM_{10} are not approved by EPA as part of this SIP.
Blackhawk Foundry and Machine Company.	Permit No. 02–A–290 (Wheelabrator #2 and Casting Sorting).	8/19/02	6/10/04, 68 FR 32456.	Provisions of the permit that relate to pollutants other than PM_{10} are not approved by EPA as part of this SIP.

EPA-APPROVED IOWA SOURCE-SPECIFIC ORDERS/PERMITS—Continued

Name of source	Order/permit No.	State effective date	EPA approval date	Comments
Blackhawk Foundry and Machine Company.	Permit No. 02–A–291 (Mold Sand Silo).	8/19/02	6/10/04, 68 FR 32456.	Provisions of the permit that relate to pollutants other than PM_{10} are not approved by EPA as part of this SIP.
Blackhawk Foundry and Machine Company.	Permit No. 02–A–292 (Bond Storage).	8/19/02	6/10/04, 68 FR 32456.	Provisions of the permit that relate to pollutants other than PM_{10} are not approved by EPA as part of this SIP.
Blackhawk Foundry and Machine Company.	Permit No. 02–A–293 (Induction Furnace and Aluminum Sweat Furnace).	8/19/02	6/10/04, 68 FR 32456.	Provisions of the permit that relate to pollutants other than PM_{10} are not approved by EPA as part of this SIP.
Blackhawk Foundry and Machine Company.	Permit No. 77–A–114–S1 (Wheelabrator #1 & Grinding).	8/19/02	6/10/04, 68 FR 32456.	Provisions of the permit that relate to pollutants other than PM_{10} are not approved by EPA as part of this SIP.
Blackhawk Foundry and Machine Company.	Permit No. 84–A–055–S1 (Cupola ladle, Pour deck ladle, Sand shakeout, Muller, Return sand #1, Sand cooler, Sand screen, and Return sand #2).	8/19/02	6/10/04, 68 FR 32456.	Provisions of the permit that relate to pollutants other than PM_{10} are not approved by EPA as part of this SIP.
Blackhawk Foundry and Machine Company.	Permit No. 72–A–060–S5 (Cupola).	8/19/02	6/10/04, 68 FR 32456.	Provisions of the permit that relate to pollutants other than PM_{10} are not approved by EPA as part of this SIP.

* * * * *

§ 52.821 Classification of regions.

The Iowa plan was evaluated on the basis of the following classification:

Air quality control region	Pollutant				
	Particulate matter	Sulfur oxides	Nitrogen dioxide	Carbon monoxide	Photochemical oxidants (hydrocarbons)
Metropolitan Omaha-Council Bluffs Interstate	I	II	III	III	III
Metropolitan Sioux Falls Interstate	II	III	III	III	III
Metropolitan Sioux City Interstate	III	III	III	III	III
Metropolitan Dubuque Interstate	I	III	III	III	III
Metropolitan Quad Cities Interstate	I	III	III	III	III
Burlington-Keokuk Interstate	I	I	III	III	III
Northwest Iowa Intrastate	III	III	III	III	III
North Central Iowa Intrastate	IA	III	III	III	III
Northeast Iowa Intrastate	I	III	III	III	III
Southwest Iowa Intrastate	III	III	III	III	III
South Central Iowa Intrastate	I	III	III	III	I
Southeast Iowa Intrastate	III	III	III	III	III

[37 FR 10865, May 31, 1972, as amended at 39 FR 16346, May 8, 1974]

§ 52.822 Approval status.

(a) With the exceptions set forth in this subpart, the Administrator approves Iowa's plan for the attainment and maintenance of the national standards. Further, the Administrator finds the plan satisfies all requirements of Part D, Title I, of the Clean Air Act as amended in 1977, except as noted below.

[45 FR 14567, Mar. 6, 1980, as amended at 46 FR 47546, Sept. 29, 1981]

§ 52.823 PM_{10} State Implementation Plan Development in Group II Areas.

The Iowa Department of Natural Resources committed to comply with the PM_{10} regulations as set forth in 40 CFR part 51. In a letter to Morris Kay, EPA, dated October 28, 1988, Mr. Larry J. Wilson, Director, Iowa Department of Natural Resources, stated:

Three groups within the State of Iowa have been classified as Group II areas for fine particulate (PM–10) State Implementation Plan (SIP) development purposes. This includes portions of the cities of Des Moines, Mason City, and Cedar Rapids. The specific boundaries of these areas were identified in a letter of October 13, 1987, from Peter R. Hamlin to Carl Walter. The remainder of the State was classified as Group III.

In accordance with the SIP development procedures identified in the preamble of the PM–10 regulations for Implementing Revised Particulate Matter Standards, promulgated July 1, 1987, the State of Iowa commits to perform the following activities in these three Group II areas of the state:

(a) Gather ambient PM–10 data, to an extent consistent with minimum EPA requirements (note the network description contained in a letter of January 26, 1988, from Peter R. Hamlin to John Helvig).

(b) Analyze and verify the ambient PM–10 data and report exceedances of the 24-hour PM–10 National Ambient Air Quality Standards (NAAQS) to the Regional Office within 60 days of each exceedance.

(c) Immediately notify the Regional Office:

(1) Upon the availability of an appropriate number of verifiable 24-hour NAAQS exceedances to indicate a violation (see Section 2.0 of the PM–10 SIP development guideline) or

(2) when an annual arithmetic mean (AAM) above the annual PM–10 NAAQS becomes available.

(d) Within thirty (30) days of any notification of the Regional Office pursuant to (c) above (or upon collection of thirty-six (36) months of PM–10 ambient air quality data acceptable to EPA, whichever comes first) determine whether the measures in the existing SIP will assure timely attainment and maintenance of the primary PM–10 NAAQS and immediately notify the Regional Office of the results of this determination.

(e) Within six (6) months of any notification pursuant to (d) above, adopt and submit to EPA a PM–10 control strategy that assures attainment as expeditiously as practicable but not later than three (3) years from approval of the Committal SIP.

Because of the uncertainty about when the determination can be made pursuant to (d) above, it is difficult to determine if that control strategy could provide for the attainment of the PM–10 NAAQS within three years from the date EPA approves thisCommittal SIP. Therefore, I reserve the right to request a two-year extension of the attainment date as provided in Section 110(e) of the Clean Air Act, if and when the State of Iowa submits a SIP revision for any of these areas of the state.

The State of Iowa also commits to develop a PM–10 emission inventory for the areas submitted as part of any PM–10 SIP pursuant to items (c), (d), and (e) above. If the PM–10 NAAQS are not violated, the State of Iowa will proceed with this inventory for the three Group II areas in accordance with the following schedule:

October 1, 1988—Request special assistance funds from EPA to perform the inventory.
October 1, 1989—Initiate inventory.
August 1, 1990—Complete inventory.
October 31, 1990*—Submit inventory as part of a determination of adequacy that the current SIP will attain and maintain the PM–10 NAAQS.

[54 FR 33539, Aug. 15, 1989]

§ 52.824 Original identification of plan section.

(a) This section identifies the original "Air Implementation Plan for the State of Iowa" and all revisions submitted by Iowa that were Federally approved prior to July 1, 1998.

(b) Incorporation by reference. (1) Material listed in paragraphs (c) and (d) of this section with an EPA approval date prior to August 1, 1999, was approved for incorporation by reference by the Director of the Federal Register in accordance with 5 U.S.C. 552(a) and 1 CFR part 51. Material is incorporated as it exists on the date of the approval, and notice of any change

*Presuming that sufficient ambient data acceptable to EPA are collected by July 31, 1990, and available by September 30, 1990.

in the material will be published in the FEDERAL REGISTER. Entries in paragraphs (c) and (d) of this section with EPA approval dates after August 1, 1999, will be incorporated by reference in the next update to the SIP compilation.

(2) EPA Region VII certifies that the rules/regulations provided by EPA in the SIP compilation at the addresses in paragraph (b)(3) are an exact duplicate of the officially promulgated state rules/regulations which have been approved as part of the SIP as of August 1, 1999.

(3) Copies of the materials incorporated by reference may be inspected at the Environmental Protection Agency, Region VII, Air Planning and Development Branch, 901 North 5th Street, Kansas City, Kansas 66101; at EPA Air and Radiation Docket and Information Center, Air Docket (6102), 1200 Pennsylvania Ave., NW., Washington, DC 20460; or at the National Archives and Records Administration (NARA). For information on the availability of this material at NARA, call 202–741–6030, or go to: *http://www.archives.gov/federal_register/code_of_federal_regulations/ibr_locations.html.*

(c) The plan revisions listed below were submitted on the dates specified:

(1) Request for a two-year extension to meet the National Primary and Secondary Ambient Air Quality Standards for nitrogen dioxide in the Metropolitan Omaha-Council Bluffs Interstate Air Quality Control Region was submitted by the Governor on January 27, 1972. (Non-regulatory)

(2) Revisions of Appendices D and G of the plan were submitted on February 2, 1972, by the State Department of Health. (Non-regulatory)

(3) Source surveillance and record maintenance statements were submitted on April 14, 1972, by the State Department of Health. (Non-regulatory)

(4) Revised statement regarding public availability of emission data was submitted on May 2, 1972, by the State Department of Health. (Non-regulatory)

(5) State submitted Senate File 85 which created the Department of Environmental Quality and replaced the Iowa air pollution control statute which appeared as Chapter 136B of the Code of Iowa, on May 4, 1972. (Regulatory)

(6) A letter describing the issuance of a Certificate of Acceptance for the local air pollution control programs conducted by the Linn County Board of Health for the jurisdictions of the City of Cedar Rapids and Linn County, and the Des Moines-Polk County Health Department for the jurisdictions of the City of Des Moines and Polk County was submitted by the State Department of Health on December 14, 1972. (Non-regulatory)

(7) Compliance schedules were submitted by the State in February 1973. (Regulatory)

(8) Compliance schedules were submitted by the State in May 1973. (Regulatory)

(9) The State of Iowa High Air Pollution Episode Contingency Plan was submitted on June 20, 1973, by the Governor.

(10) The letter which requested the inclusion of the Linn County Health Department Rules and Regulations, the City of Cedar Rapids Air Pollution Control Ordinance, the Polk County Rules and Regulations—Air Pollution Control, and the City of Des Moines Air Pollution Control Regulations in the State of Iowa implementation plan was submitted by the State Department of Environmental Quality on June 25, 1974. (No approval action was taken on the request because it did not meet the procedural requirements specified in 40 CFR part 51.)

(11) Revisions of Rules 2.1, 3.1, 3.4, 4.1, 4.3(3) and 4.3(4) of the Iowa Rules and Regulations Relating to Air Pollution Control were submitted on April 24, 1974 (by the Governor's office). (No approval or disapproval action was taken on amended Subrule 4.3(3)a., which restricts emissions of sulfur oxides from fuel-burning sources.) (Regulatory)

(12) Compliance schedules were submitted by the State in May 1974.

(13) Compliance schedules were submitted by the State in May 1974.

(14) Compliance schedules were submitted by the State in July 1974.

(15) Compliance schedules were submitted by the State in August 1974.

(16) A letter from the Director of the Department of Environmental Quality, dated August 29, 1974, which requested that no further action be taken on Subrule 4.3(3) a. as submitted on April 24, 1974. (Regulatory)

(17) Compliance schedules were submitted by the State in September 1974.

(18) Compliance schedules were submitted by the State in November 1974.

(19) Compliance schedules were submitted by the State in February 1975.

(20) Compliance schedules were submitted by the State in April 1975.

(21) Compliance schedules were submitted by the State in June 1975.

(22) Revisions of Rules 1.2, 2.1, 3.1, 3.4, 4.1, 4.2, 4.3, 5.1, 7.1, 8.3 and 8.4 of the Iowa Rules and Regulations Relating to Air Pollution Control were submitted on July 17, 1975, by the Governor's office. (Regulatory) (No approval or disapproval action was taken on Subrules 4.3(2)c. or 4.3(3)b.)

(23) Summary of the public hearing which was held on the revised rules which were submitted on July 17, 1975, by the Governor's office was submitted by the Iowa Department of Environmental Quality on September 3, 1975. (non-regulatory)

(24) Letter which withdrew amended Subrule 4.3(2)c. from the proposed Iowa plan revision submitted on July 17, 1975, was submitted by the Governor's office on January 20, 1976.

(25) Revisions to Rules 1.2, 2.1, 3.1, 3.2, 4.1, 4.3, 4.4, and new Chapters 14 and 52 of the Iowa Administrative Code Relating to Air Pollution Control were submitted June 9, 1976, by the Department of Environmental Quality (Subrules 4.3(3)a(1) and 4. 3(3)a(5) were disapproved).

(26) Additional air quality modeling to support the sulfur dioxide emission standards of Subrules 4.3(3)a(1) and 4.3(3)a(2) was submitted March 4, 1977, by the Department of Environmental Quality (Non-regulatory).

(26a) Revisions of Rules 1.2, 4.3(2)b, 4.4(6), 4.4(12) and of Chapter 7 of the Iowa Administrative Code relating to Air Pollution Control were submitted June 20, 1977, by the Department of Environmental Quality.

(27) Nonattainment plan provisions as required by the Clean Air Act Amendments of 1977 were submitted on June 22, 1979, by the Department of Environmental Quality. The submission included amended rule 4.3(2) relating to fugitive dust and new rule 4.5 relating to offsets for particulate matter. The revisions included attainment plans for particulate in Mason City and Davenport, particulate and ozone in Cedar Rapids and particulate and carbon monoxide in Des Moines. The submission was disapproved in part for failure to meet the requirements of Section 173 and was conditionally approved with respect to several requirements.

(28) On October 8, 1979, the Iowa Department of Environmental Quality submitted additional information to support the June 22, 1979, submission.

(29) On November 16, 1979, the Iowa Air Quality Commission submitted additional information and commitments to allow approval or conditional approval of portions of the June 22, 1979, submission.

(30) Nonattainment plan provisions as required by the Clean Air Act Amendments of 1977 were submitted on April 18, 1980, by the Department of Environmental Quality. The submission included amended rule 4.3(2) relating to fugitive dust and amended rule 3.5 relating to particulate matter offsets. The revisions included plans to attain the secondary particulate standards for all areas designated nonattainment as of March 6, 1980. The submission was conditionally approved with respect to several requirements.

(31) The State of Iowa Lead State Implementation Plan was submitted on August 19, 1980 by the Director of the Department of Environmental Quality.

(32) Additional information to support the April 18, 1980 submission was submitted on September 16, 1980, by the Department of Environmental Quality.

(33) Additional information to support the April 18, 1980 submission was submitted on November 17, 1980, by the Department of Environmental Quality.

(34) A revised Chapter 5, dealing with excess emissions and malfunctions was submitted on December 23, 1980, by the Department of Environmental Quality.

(35) [Reserved]

(36) A letter was submitted dated January 19, 1981 by the Director of the Department of Environmental Quality which provided additional information

concerning the Iowa Lead State Implementation Plan.

(37) A variance from 400—4.2(1) of the Iowa Administrative Code for the Iowa Army Ammunition Plant at Middletown, Iowa, was submitted on October 19, 1979 by the Executive Director.

(38) Revisions to Subrule 400—4.3(2)"c" relating to fugitive emissions control and a document describing how this subrule is to be enforced were submitted on June 1, 1981, by the Department of Environmental Quality.

(39) A schedule for studying nontraditional sources of particulate matter and for implementing the results of the studies in the form of control strategies was submitted on June 26, 1981 by the Department of Environmental Quality. (Non-Regulatory).

(40) Revisions to Subrule 400—4.3(2)"b" relating to particulate emissions from fuel burning sources were submitted on July 31, 1981, by the Department of Environmental Quality.

(41) The Iowa Ambient Air Monitoring Strategy was submitted July 15, 1981, by the Department of Environmental Quality (non-regulatory).

(42) A conditional permit containing an alternative emission reduction program for the Progressive Foundry, Inc., of Perry, Iowa, under 400–3.7 and 400–4.6 of the Iowa Administrative Code; and an administrative order setting forth a compliance schedule, were submitted on December 18, 1981, by the Executive Director. The conditional permit specifies particulate emissions not to exceed 16.3 pounds per hour from the gray iron cupola with a process weight rate not to exceed 8534 pounds per hour and specifies the casting shakeout exhaust system shall not exceed 0.05 grains per standard cubic foot nor 12.8 pounds per hour of particulate matter. The compliance schedule specifies a final compliance date of September 1, 1983.

(43) On July 1, 1983, the State's air pollution control regulations were recodified at Department 900, Title II, Chapters 20 through 29.

(44) Revised Chapter 22 regulations, dealing with new source review in nonattainment areas, were submitted on July 18, 1984, by the Iowa Department of Water, Air and Waste Management. Subrules 22.5(4) g, i, and j remain unapproved. EPA will temporarily defer action on these subrules pending a May 14, 1985, commitment from the State to submit appropriate revisions.

(i) *Incorporation by reference.* Revised Chapter 22 regulations, dealing with new source review in nonattainment areas, adopted by the State on July 17, 1984.

(ii) Additional material. May 14, 1985, letter of commitment from the State to revise unapprovable portions of their Chapter 22 air pollution regulations.

(45) Revised Chapter 22 subrules 22.5(2) a and b; and revised subrules 22.5(4) g, i, and j, all relating to new source review in nonattainment areas, were submitted on December 31, 1985, by the Iowa Department of Water, Air and Waste Management.

(a) *Incorporation by reference.*

(i) Revised Chapter 22 subrules 22.5(2) a and b; and subrules 22.5(4) g, i, and j, adopted by the State on December 17, 1985.

(ii) April 22, 1986, letter of commitment from the Iowa Department of Water, Air and Waste Management to submit stack height regulations by May 30, 1986, and to implement EPA's stack height requirements until such time that the regulations are fully approved.

(46) Revised Chapter 22 regulations pertaining to new source review in attainment and unclassified areas of the state (PSD) were submitted on March 9, 1987, by the Iowa Department of Natural Resources.

(i) *Incorporation by reference.*

(A) Iowa Administrative Bulletin (ARC 7446), amendments to Chapter 22, "Controlling Pollution," adopted by the Iowa Environmental Protection Commission on February 17, 1987.

(B) Letter from Iowa dated April 22, 1987, committing to implementation of its stack height regulations in a manner consistent with EPA's stack height regulations with respect to new source review/PSD regulations.

(47) Revised Chapters 22 and 23 regulations pertaining to stack height credits for modeling purposes were submitted on May 20, 1986, by the Iowa Department of Natural Resources. Revised definition of "emission limitation" and "emission standard" at Iowa regulation 567.20.2(455B), Definitions.

(i) *Incorporation by reference.*

(A) Iowa Administrative Bulletin (ARC 6566), amendments to Chapter 22, "Controlling Pollution" and Chapter 23, "Emission Standards for Contaminants" adopted by the Iowa Environmental Protection Commission on April 22, 1986, effective June 25, 1986.

(B) Iowa Administrative Bulletin (ARC 8023) amendment to 567–20.2(455B). Effective September 22, 1987.

(48) Revised Chapter 22, subrule 22.1(2)"d" exemptions from permit requirements were submitted on September 13, 1988, by the Iowa Department of Natural Resources. The revision clarifies permit exemptions for certain grain roasting equipment.

(i) *Incorporation by reference.*

(A) Amendment to Chapter 22, "Controlling Pollution," Iowa Administrative Code, subrule 22.1(2)"d", effective September 14, 1988.

(49) Revised Polk County, Iowa, Board of Health Rules and Regulations, Chapter V, Air Pollution, submitted by the Iowa Department of Natural Resources on February 3, 1988. EPA approves these regulations with the provision that any operating permit which changes any requirement of the Iowa SIP, including requirements in any construction permit, must be submitted to EPA, and approved, as a SIP revision. In the absence of such approval, the enforceable requirements shall be those in the Iowa SIP.

(i) *Incorporation by reference.*

(A) Ordinance No. 28, Amendment to Polk County Board of Health Rules and Regulations chapter V, Air Pollution, Article I, 5–1 and 5–2 (except for variance); Article II, 5–3; and Article X, 5–28 through 5.50–1 (except for 5–49 and 5–50), effective October 8, 1987.

(ii) Additional material.

(A) None.

(50) Revised Linn County, Iowa, Chapter 10 Ordinance "Air Pollution Control" submitted as a SIP revision by the Iowa Department of Natural Resources on February 3, 1988. EPA approves these regulations with the provision that any operating permit which changes any requirement of the Iowa SIP, including requirements in any construction permit, must be submitted to EPA, and approved, as a SIP revision. In the absence of such approval, the enforceable requirements shall be those in the Iowa SIP.

(i) *Incorporation by reference.*

(A) Linn County Chapter 10 Ordinance "Air Pollution Control" sections 10.1 (except for 10.1(50)), 10.2, 10.3, and 10.4, adopted by the Linn County Board of Supervisors on September 2, 1987.

(ii) Additional material.

(A) None.

(51) Revised Iowa regulations pertaining to PM_{10} were submitted by the state on October 28, 1988. These rules became effective on December 21, 1988.

(i) *Incorporation by reference.*

(A) Amended Iowa Administrative Code pertaining to the prevention, abatement, and control of air pollution: Chapter 20, "Scope of Title—Definitions—Forms—Rules of Practice;" Chapter 22, "Controlling Pollution;" Chapter 26, "Prevention of Air Pollution Emergency Episodes;" and Chapter 28, "Ambient Air Quality Standards," effective December 21, 1988.

(ii) Additional information.

(A) None.

(52) Revised chapter 22, subrule 22.4(1), submitted on May 7, 1990, incorporates by reference revised EPA Modeling Guideline Supplement A, July 1987, and recodified air quality rules chapter 20–29.

(i) *Incorporation by reference.*

(A) Amendment to chapter 22, "Controlling Pollution," Iowa Administrative Code, subrule 22.4(1). Effective March 14, 1990.

(B) Recodification of Iowa Administrative Code, title II—Air Quality, chapters 20–29, effective December 3, 1986.

(53) Revised chapter 22, rule 22.4(455B), submitted on November 8, 1990, incorporates by reference revised EPA PSD rules pertaining to NO_X increments.

(i) *Incorporation by reference.*

(A) Amendment to chapter 22, "Controlling Pollution," Iowa Administrative Code, subrule 22.4, adopted by the Environmental Protection Commission on October 17, 1990, effective November 21, 1990.

(ii) Additional material

(A) Letter from the state dated November 8, 1990, pertaining to NO_X rules

and analysis which certifies the material was adopted by the state on October 17, 1990.

(54) On March 13, 1991, the Iowa Department of Natural Resources (IDNR) submitted a plan revision pertaining to major SO_2 sources in Clinton County, Iowa.

(i) *Incorporation by reference.* (A) Administrative Consent Order #90–AQ–10, signed by Larry Wilson, Director, IDNR, dated July 5, 1990, and revision dated March 25, 1991. Also, three letters to Archer-Daniels-Midland (ADM) Company dated June 20, 1990, signed by Michael Hayward, IDNR, which contain or reference new or revised permit conditions for ADM sources, and a letter to ADM from IDNR dated February 26, 1991, correcting certain permit provisions.

(B) Administrative Consent Order #89–AQ–04, signed by Larry Wilson, Director, IDNR, dated February 21, 1990. Also, two letters to Interstate Power Company dated January 25 and 29, 1990, and signed by Michael Hayward, IDNR, which contain supplemental permit condition for permits 74-A-117-S and 78–A–157–S.

(ii) *Additional material.* (A) Letter and supplemental material from Larry J. Wilson to Morris Kay dated March 13, 1991.

(55) Revised Polk County, Iowa Board of Health Rules and Regulations, chapter V, Air Pollution, submitted by the Iowa Department of Natural Resources on May 23, 1991.

(i) *Incorporation by reference.* (A) Polk County Board of Health Rules and Regulations, chapter V, Air Pollution, Ordinances 28, 72 and 85, effective May 1, 1991, except for the following: Article I, definition of variance; Article VI, Section 5–16 (n), (o), and (p); Article VI, Section 5–17(d), variance provision; Article VIII; Article IX, Sections 5–27(3) and 5–27(4); and Article X, Division 5—Variance.

(ii) *Additional material.* (A) Letter from Allan Stokes to William A. Spratlin dated October 23, 1991.

(56) Revised Chapter 23, rule 23.2, submitted on October 3, 1991, incorporates changes to the open burning rule.

(i) *Incorporation by reference.*

(A) Amendment to Chapter 23, "Emission Standards for Contaminants, "Iowa Administrative Code, subrule 23.2, adopted by the Environmental Protection Commission, effective September 12, 1990.

(ii) Additional information.

(A) Letter from Allan Stokes, IDNR, to William Spratlin, dated October 3, 1991.

(57) On January 5, 1993, the Iowa Department of Natural Resources (IDNR) submitted air quality rule revisions to Iowa Administrative Code, Chapters 20, 22, 23, 24, 25, 29, and revisions to the Compliance Sampling Manual.

(i) *Incorporation by reference.*

(A) Revisions to Chapter 20 (20.2), Scope of Title-Definitions-Forms-Rules of Practice; Chapter 22 (22.3(1), 22.4, 22.5(2)), Controlling Pollution; Chapter 23 (23.2(3), 23.3(2), 23.3(3), 23.4(12)), Emission Standards for Contaminants; Chapter 24 (24.1(1), 24.1(5)), Excess Emission; Chapter 25, (25.1(7), 25.1(9)), Measurement of Emissions and rescind 25.1(10)d; and Chapter 29 (29.1), Qualification in Visual Determination of the Opacity of Emissions. These revisions were adopted by the Iowa Environmental Protection Commission on December 21, 1992, and became effective on February 24, 1993.

(ii) Additional material.

(A) Letter from Larry Wilson, IDNR, to Morris Kay, EPA, dated January 5, 1993, and the Compliance Sampling Manual, revised December 1992.

(58) A plan for implementation of the Small Business Stationary Source Technical and Environmental Compliance Assistance Program was submitted by the Iowa Department of Natural Resources as a revision to the Iowa SIP on December 22, 1992.

(i) *Incorporation by reference.*

(A) Revisions to the Iowa State Implementation Plan for the Small Business Stationary Source Technical and Environmental Compliance Assistance Program dated December 1992.

(59) On May 5, 1994, the Director of the Iowa Department of Natural Resources submitted revisions to the State Implementation Plan (SIP) to update the state's incorporation by reference and conformity to various federally approved regulations.

(i) *Incorporation by reference.*

(A) Revised rules, "Iowa Administrative Code," effective January 12, 1994.

This revision approves an amendment to paragraph 23.2(3)g pertaining to open fires burned for the purpose of training fire-fighting personnel.

(B) Revised rules, "Iowa Administrative Code," effective April 20, 1994. This revision approves amendments to rules 22.4; 23.3(2)d (3) and (4); 23.4(6); and 25.1(9). These rules concern the update of the state's incorporation of prevention of significant deterioration and test method requirements.

(ii) Additional material. None.

(60) On May 5, 1994, the Director of the Iowa Department of Natural Resources submitted revisions to the State Implementation Plan (SIP) to update the state's incorporation by reference and conformity to various Federally approved regulations.

(i) *Incorporation by reference.*

(A) Revised rules, "Polk County Ordinance No. 132—Polk County Board of Health Rules and Regulations," effective December 2, 1993. This revision approves all articles in Chapter V, except for Article VI, Section 5–16(n) and (p), Article VIII, and Article XIII.

(ii) Additional material.

(A) None.

(61) On October 18, 1994, and January 26, 1995, the Director of the Iowa Department of Natural Resources submitted revisions to the state implementation plan (SIP) to include special requirements for nonattainment areas, provisions for use of compliance, and enforcement information and adoption of EPA definitions. These revisions fulfill Federal regulations which strengthen maintenance of established air quality standards.

(i) *Incorporation by reference.*

(A) Revised rules "Iowa Administrative Code," effective November 16, 1994. This revision approves revised rules 567–20.2, 567–22.5(1)a, 567–22.5(1)f(2), 567–22.5(1)m, 567–22.5(2), 567–22.5(3), 567–22.5(4)b, 567–22.5(6), 567–22.5(7), 567–22.105(2), and new rule 567–21.5. These rules provide for special requirements for nonattainment areas, provisions for use of compliance and enforcement information and adopts EPA's definition of volatile organic compound.

(B) Revised rules, "Iowa Administrative Code," effective February 22, 1995. This revision approves new definitions to rule 567–20.2. This revision adopts EPA's definitions of "EPA conditional method" and "EPA reference method."

(ii) Additional material.

None.

(62) [Reserved]

(63) On December 8, 1994; February 16, 1996; and February 27, 1996, the Director of the Iowa Department of Natural Resources submitted revisions to the State Implemenation Plan (SIP) to create a voluntary operating permit program as an alternative to Title V. These revisions strengthen maintenance of established air quality standards.

(i) *Incorporation by reference.*

(A) "Iowa Administrative Code," sections 567–22.200–22.208, effective December 14, 1994. These rules create the voluntary operating permit program.

(B) "Iowa Administrative Code," sections 567–22.201(1)"a" and 22.206(1)"h", effective January 11, 1995.

(C) "Iowa Administrative Code," section 567–22.203(1)"a"(1), effective February 24, 1995.

(D) "Iowa Administrative Code," sections 567–20.2; 22.200; 22.201(1)"a" and "b"; 22.201(2)"a"; and 22.206(2)"c", effective October 18, 1995.

(ii) Additional material.

(A) Letter from Allan E. Stokes, Iowa Department of Natural Resources, to William A. Spratlin, U.S. EPA, dated February 16, 1995. This letter outlines various commitments by the state to meet requirements outlined by the EPA.

(64) In correspondence dated February 16, 1996, February 19, 1996, and February 27, 1996, the Director of the Iowa Department of Natural Resources (IDNR) submitted revisions to the State Implementation Plan concerning open burning, new source review (NSR) requirements for nonattainment areas, test method and definition updates.

(i) Incorporation by reference.

(A) "Iowa Administrative Code," section 567–22.8(1), effective July 12, 1995, containing a permit by rule for spray booths.

(B) "Iowa Administrative Code," sections 567–23.2(3); 23.2(4), effective April 19, 1995, addressing open burning.

(C) "Iowa Administrative Code," sections 567–22.5 (2)–(6), (8)–(10), effective March 20, 1996. These rules address NSR requirements in nonattainment areas.

(D) "Iowa Administrative Code," sections 567–20.2; 22.4(1); and 25.1(9), effective July 12, 1995. These rules address test method and definition updates.

(E) "Iowa Administrative Code," section 567–31.1, effective February 22, 1995. This rule addresses permit requirements relating to nonattainment areas.

(ii) Additional material.

(A) Letter dated July 11, 1997, from Pete Hamlin, IDNR, to Wayne Leidwanger, EPA, requesting approval under 112(l).

(65) On June 13, 1996, and April 25, 1997, the Director of the Iowa Department of Natural Resources (IDNR) submitted a revision to the State Implementation Plan (SIP) which included permits containing source specific emission limits and conditions for three sources in Muscatine, Iowa.

(i) Incorporation by reference.

(A) Grain Processing Corporation permits #95–A–374, #74–A–015–S, #79–A–194–S, #79–A–195–S, signed September 18, 1995.

(B) Muscatine Power and Water permits #74–A–175–S, #95–A–373 signed September 14, 1995.

(C) Monsanto Corporation permits #76–A–265S3, #76–A–161S3, signed July 18, 1996.

(ii) Additional material.

(A) Letters from Allan E. Stokes, IDNR, to Dennis Grams, Environmental Protection Agency, dated June 13, 1996, and April 21, 1997, containing supporting SIP information.

(66) On April 2, 1997, the Director of the Iowa Department of Natural Resources submitted revisions to the State Implementation Plan (SIP) for the State's two local agencies: the Polk County Public Works Department and Linn County Health Department.

(i) Incorporation by reference.

(A) Revised rules, "Polk County Board of Health Rules and Regulations: Chapter V, Air Pollution," effective December 18, 1996. This revision approves all articles insofar as they pertain to the SIP. Article XIII is specifically excluded from this approval. No action is taken on Sections 5–16(n), 5–16(p), 5–20, and 5–27(3) and (4).

(B) Revised rules, "Linn County Air Pollution Control Code of Ordinances," effective March 7, 1997. This revision approves all sections insofar as they pertain to the SIP. Sections 10.4(1.), 10.11, and 10.15 are specifically excluded from this approval. No action is taken on Sections 10.9(2.), 10.9(3.), 10.9(4.), and the definition of "federally enforceable" in Section 10.2.

(ii) Additional material.

(A) Letter from Allan E. Stokes, Iowa Department of Natural Resources, to William A. Spratlin, Environmental Protection Agency, dated May 15, 1997. This letter provides additional information regarding various administrative requirements outlined in 40 CFR part 51.

(67) In correspondence dated Octoer 21, 1997, and January 21, 1998, the Director of the Iowa Department of Natural Resources submitted revisions to the State Implementation Plan.

(i) Incorporation by reference.

(A) "Iowa Administrative Code" sections567–22.8(1) "b," "c," and "e,"567–22.203(1) "a," 567–22.300, 567–22.300(1) through 567–22.300(11), 567–23.3(2) "d," and 567–29.1, effective June 12, 1996.

(B) "Iowa Administrative Code"section 567–20.2, effective October 16, 1996.

(C) "Iowa Administrative Code" sectuibs 567–22.300(40 "b"(1), 567–22.300(8) "a"(1), and 567–22.300(8)"b"(2), effective December 25, 1996.(D) "Iowa Administrative Code" sections 567–20.2, 567–22.2(1), 567–22.201(1) "a," 567–22.201(2) "b," 567–22.202, 567–22.203(1), 567–22.300(3) "b" and "c," 567–22.300(8) "a," effective May 14, 1997.

(ii) Additional material.

(A) "Iowa Administrative Code" section 567–23.1(5), Calculation of emission limitations based upon stack height, was renumbered to section 567–23.1(6), effective August 20, 1997.

[37 FR 10865, May 31, 1972. Redesignated at 64 FR 7094, Feb. 12, 1999]

EDITORIAL NOTE: For FEDERAL REGISTER citations affecting § 52.824, see the List of CFR Sections Affected, which appears in the Finding Aids section of the printed volume and on GPO Access.

§ 52.825 Compliance schedules.

(a) [Reserved]

(b) *Regulation for increments of progress.* (1) Except as provided in paragraph (b)(2) of this section, the owner or operator of any stationary source

subject to regulation 4.3.(3)(b), "Rules and Regulations Relating to Air Pollution Control of the Iowa Air Pollution Control Commission" shall, no later than December 31, 1972, submit to the Administrator for approval, a proposed compliance schedule that demonstrates compliance with the applicable regulation as expeditiously as practicable but no later than January 1, 1975. The compliance schedule shall provide for periodic increments of progress towards compliance. The dates for achievement of such increments shall be specified. Increments of progress shall include, but not be limited to: Letting of necessary contract for construction or process changes, if applicable; initiation of construction; completion and start-up of control system; performance tests; and submittal of performance test analysis and results.

(2) Where any such owner or operator demonstrates to the satisfaction of the Administrator that compliance with the applicable regulations will be achieved on or before December 31, 1973, no compliance schedule shall be required.

(3) Any owner or operator who submits a compliance schedule pursuant to this paragraph shall, within 5 days after the deadline for each increment of progress, certify to the Administrator whether or not the required increment of the approved compliance schedule has been met.

(4) Any compliance schedule adopted by the State and approved by the Administrator shall satisfy the requirements of this paragraph for the affected source.

(c) The compliance schedules for the sources identified below are approved as revisions to the plan pursuant to § 51.104 and subpart N of this chapter. All regulations cited are air pollution control regulations of the State, unless otherwise noted.

IOWA

Source	Location	Regulation involved	Date adopted	Variance expiration date	Final compliance date
Iowa Army Ammunition Plant (explosive contaminated waste burning).	Middletown, Iowa.	400—4.2(1)	June 14, 1979	Feb. 28, 1982 ..	Feb. 1982.
Progressive Foundry, Inc., cupola and casting shakeout area.	Perry	400–4.6	Nov. 6, 1981 ...	.....	Sept. 1, 1983.

NOTE 1: Linn County Health Department does not issue variances if source(s) is on an approvable compliance schedule.
NOTE 2: Polk County Department of Health does not issue variances if source(s) is on an accepted and approved compliance schedule.
NOTE 3: City of Des Moines, Department of Public Health does not issue variances if source(s) is on an accepted and approved compliance schedule.

[37 FR 10865, May 31, 1972]

EDITORIAL NOTE: For FEDERAL REGISTER citations affecting § 52.825, see the List of CFR Sections Affected, which appears in the Finding Aids section of the printed volume and on GPO Access.

§§ 52.826–52.827 [Reserved]

§ 52.828 Enforcement.

(a) Sections 23(1)(b) and 13(7) of Senate File 85, Division II for Iowa are disapproved insofar as they permit the Air Quality Commission of the Iowa Department of Environmental Quality to issue abatement orders (1) that defer compliance with plan requirements beyond the dates required for attainment of the national standards, (2) without the approval of the Administrator, and (3) for reasons not permitted by the Clean Air Act.

(b) Regulation limiting administrative abatement orders:

(1) No order deferring compliance with a requirement of the Iowa Implementation Plan shall be issued by the Air Quality Commission of the Iowa Department of Environmental Quality which does not meet the following requirements:

(i) An order must require compliance with the plan requirement within the times and under the conditions specified in § 51.261 (a) and (b) of this chapter.

(ii) An order may not defer compliance beyond the last date permitted by

section 110 of the Act for attainment of the national standard which the plan implements unless the procedures and conditions set forth in section 110(f) of the Act are met.

(iii) An order shall not be effective until it has been submitted to and approved by the Administrator in accordance with §§51.104, 51.105, 51.261 and 51.262(a).

(2) Notwithstanding the limitations of paragraph (b)(1)(ii) of this section, an order may be granted which provides for compliance beyond the statutory attainment date for a national standard where compliance is not possible because of breakdowns ormalfunctions of equipment, acts of God, or other unavoidable occurrences. However, such order may not defer compliance for more than three (3) months unless the procedures and conditions set forth in section 110(f) of the Act are met.

[38 FR 30877, Nov. 8, 1973, as amended at 51 FR 40675, 40676, 40677, Nov. 7, 1986; 52 FR 24367, June 30, 1987]

§§ 52.829–52.832 [Reserved]

§ 52.833 Significant deterioration of air quality.

(a) The requirements of sections 160 through 165 of the Clean Air Act are met, except for sources seeking permits to locate on Indian lands in the state of Iowa; sources with permits issued by EPA prior to the effective date of the state's rules; and certain sources affected by the stack height rules described in a letter from Iowa dated April 22, 1987.

(b) Regulations for preventing significant deterioration of air quality. The provisions of §52.21 except paragraph (a)(1) are hereby incorporated and made a part of the applicable State plan for the State of Iowa for sources wishing to locate on Indian lands; sources constructed under permits issued by EPA; and certain sources as identified in Iowa's April 22, 1987, letter.

[52 FR 23982, June 26, 1987, as amended at 68 FR 11323, Mar. 10, 2003; 68 FR 74489, Dec. 24, 2003]

§ 52.834 Control strategy: Sulfur dioxide.

Approval—On April 21, 1997, the Iowa Department of Natural Resources (IDNR) submitted a maintenance plan and redesignation request for the Muscatine County nonattainment area. The maintenance plan and redesignation request satisfy all applicable requirements of the Clean Air Act.

[63 FR 13345, Mar. 19, 1998]

Subpart R—Kansas

§ 52.869 [Reserved]

§ 52.870 Identification of plan.

(a) *Purpose and scope.* This section sets forth the applicable SIP for Kansas under Section 110 of the CAA, 42 U.S.C. 7401 *et seq.* and 40 CFR Part 51 to meet NAAQS.

(b) *Incorporation by reference.* (1) Material listed in paragraphs (c), (d) and (e) of this section with an EPA approval date prior to October 1, 2003, was approved for incorporation by reference by the Director of the Federal Register in accordance with 5 U.S.C. 552(a) and 1 CFR part 51. Material is incorporated as it exists on the date of the approval, and notice of any change in the material will be published in the FEDERAL REGISTER. Entries in paragraphs (c), (d) and (e) of this section with EPA approval dates after October 1, 2003, will be incorporated by reference in the next update to the SIP compilation.

(2) EPA Region VII certifies that the rules/regulations provided by EPA in the SIP compilation at the addresses in paragraph (b)(3) of this section are an exact duplicate of the officially promulgated state rules/regulations which have been approved as part of the SIP as of October 1, 2003.

(3) Copies of the materials incorporated by reference may be inspected at the Environmental Protection Agency, Region VII, Air Planning and Development Branch, 901 North 5th Street, Kansas City, Kansas 66101; at the EPA, Air and Radiation Docket and Information Center, Room B–108, 1301 Constitution Avenue, NW., (Mail Code 6102T), Washington, DC 20460; or at the National Archives and Records

Administration (NARA). For information on the availability of this material at NARA, call 202–741–6030, or go to: *http://www.archives.gov/federal_register/code_of_federal_regulations/ibr_locations.html.*

(c) *EPA-approved regulations.*

EPA—APPROVED KANSAS REGULATIONS

Kansas citation	Title	State effective date	EPA approval date	Explanation
Kansas Department of Health and Environment Ambient Air Quality Standards and Air Pollution Control				
General Regulations				
K.A.R. 28–19–6	Statement of Policy	1/1/72	5/31/72, 37 FR 10867.	Kansas revoked this rule 5/1/82.
K.A.R. 28–19–8	Reporting Required	1/23/95	7/17/95, 60 FR 36361.	
K.A.R. 28–19–9	Time Schedule for Compliance	5/1/84	12/21/87, 52 FR 48265.	
K.A.R. 28–19–10	Circumvention of Control Regulations.	1/1/71	5/31/72, 37 FR 10867.	
K.A.R. 28–19–11	Exceptions Due to Breakdowns or Scheduled Maintenance.	1/1/74	11/8/73, 38 FR 30867.	
K.A.R. 28–19–12	Measurement of Emissions.	1/1/71	5/31/72, 37 FR 10867.	
K.A.R. 28–19–13	Interference with Enjoyment of Life and Property.	1/1/74	11/8/73, 38 FR 30876.	
K.A.R. 28–19–14	Permits Required	1/24/94	7/17/95, 60 FR 36361.	
K.A.R. 28–19–15	Severability	1/1/71	5/31/72, 37 FR 10867.	
Nonattainment Area Requirements				
K.A.R. 28–19–16	New Source Permit Requirements for Designated Nonattainment Areas.	10/16/89	1/16/90, 55 FR 1422.	
K.A.R. 28–19–16a	Definitions	10/10/97	1/11/00, 65 FR 1548.	
K.A.R. 28–19–16b	Permit Required	10/16/89	1/16/90, 55 FR 1422.	
K.A.R. 28–19–16c	Creditable Emissions Reductions.	10/16/89	1/16/90, 55 FR 1422	The EPA deferred action on the state's current definition of the terms "building, structure, facility, or installation"; "installation "; and "reconstruction."
K.A.R. 28–19–16d	Fugitive Emission Exemption	10/16/89	1/16/90, 55 FR 1422.	
K.A.R. 28–19–16e	Relaxation of Existing Emission Limitations.	10/16/89	1/16/90, 55 FR 1422.	
K.A.R. 28–19–16f	New Source Emission Limits	10/16/89	1/16/90, 55 FR 1422.	
K.A.R. 28–19–16g	Attainment and Maintenance of National Ambient Air Quality Standards.	10/16/89	1/16/90, 55 FR 1422.	
K.A.R. 28–19–16h	Compliance of Other Sources	10/16/89	1/16/90, 55 FR 1422.	
K.A.R. 28–19–16i	Operating Requirements	10/16/89	1/16/90, 55 FR 1422.	
K.A.R. 28–19–16j	Revocation and Suspension of Permit.	10/16/89	1/16/90, 55 FR 1422.	
K.A.R. 28–19–16k	Notification Requirements	10/16/89	1/16/90, 55 FR 1422.	
K.A.R. 28–19–16l	Failure to Construct	10/16/89	1/16/90, 55 FR 1422.	
K.A.R. 28–19–16m	Compliance with Provisions of Law Required.	10/16/89	1/16/90, 55 FR 1422.	
Attainment Area Requirements				
K.A.R. 28–19–17	Prevention of Significant Deterioration of Air Quality.	11/22/02	02/26/03, 68 FR 8846.	K.A.R. 28–19–17a through 28–19–17q revoked. Provision moved to K.A.R. 28–19–350.

EPA—APPROVED KANSAS REGULATIONS—Continued

Kansas citation	Title	State effective date	EPA approval date	Explanation
Stack Height Requirements				
K.A.R. 28–19–18	Stack Heights	5/1/88	4/20/89, 54 FR 15934.	The state requlation has stack height credit. The EPA has not approved that part.
K.A.R. 28–19–18b	Definitons	5/1/88	4/20/89, 54 FR 15934.	
K.A.R. 28–19–18c	Methods for Determining Good Engineering Practice Stack Height.	5/1/88	4/20/89, 54 FR 15934.	
K.A.R. 28–19–18d	Fluid Modeling	5/1/88	4/20/89, 54 FR 15934.	
K.A.R. 28–19–18e	Relaxation of Existing Emission Limitations.	5/1/88	4/20/89, 54 FR 15934.	
K.A.R. 28–19–18f	Notification Requirements	5/1/88	4/20/89, 54 FR 15934.	
Continuous Emission Monitoring				
K.A.R. 28–19–19	Continuous Emission Monitoring.	6/8/92	1/12/93, 58 FR 3847.	
Processing Operation Emissions				
K.A.R. 28–19–20	Particulate Matter Emission Limitations.	10/16/89	1/16/90, 55 FR 1421.	
K.A.R. 28–19–21	Additional Emission Restrictions	10/16/89	1/16/90, 55 FR 1422.	
K.A.R. 28–19–22	Sulfur Compound Emissions	1/1/72	11/8/73, 38 FR 30876.	
K.A.R. 28–19–23	Hydrocarbon Emissions—Stationary Sources.	12/27/72	11/8/73, 38 FR 30876.	
K.A.R. 28–19–24	Control of Carbon Monoxide Emissions.	1/1/72	11/8/73, 38 FR 30876.	
Indirect Heating Equipment Emissions				
K.A.R. 28–19–30	General Provisions	1/1/72	5/31/72, 37 FR 10867.	
K.A.R. 28–19–31	Emission Limitations	11/8/93	10/18/94, 59 FR 52425.	
K.A.R. 28–19–32	Exemptions—Indirect Heating Equipment.	11/8/93	10/18/94, 59 FR 52425.	
Incinerator Emissions				
K.A.R. 28–19–40	General Provisions	1/1/71	5/31/72, 37 FR 10867.	
K.A.R. 28–19–41	Restriction of Emission	12/27/72	11/8/73, 38 FR 30876.	
K.A.R. 28–19–42	Performance Testing	1/1/72	11/8/73, 38 FR 30876.	
K.A.R. 28–19–43	Exceptions	1/1/71	5/31/72, 37 FR 10867.	
Air Pollution Emergencies				
K.A.R. 28–19–55	General Provisions	1/1/72	5/31/72, 37 FR 10867.	
K.A.R. 28–19–56	Episode Criteria	10/16/89	1/16/90, 55 FR 1422.	
K.A.R. 28–19–57	Emission Reduction Requirements.	1/1/72	5/31/72, 37 FR 10867.	
K.A.R. 28–19–58	Emergency Episode Plans	1/1/72	5/31/72, 37 FR 10867.	
Volatile Organic Compound Emissions				
K.A.R. 28–19–61	Definitions	10/7/91	6/23/92, 57 FR 27936.	

EPA—APPROVED KANSAS REGULATIONS—Continued

Kansas citation	Title	State effective date	EPA approval date	Explanation
K.A.R. 28–19–62	Testing Procedures	10/7/71	6/23/92, 57 FR 27936.	
K.A.R. 28–19–63	Automobile and Light Duty Truck Surface Coating.	11/8/93	10/18/94, 59 FR 52425.	
K.A.R. 28–19–64	Bulk Gasoline Terminals	5/1/88	5/18/88, 53 FR 17700.	
K.A.R. 28–19–65	Volatile Organic Compounds (VOC) Liquid Storage in Permanent Fixed Roof Type Tanks.	5/1/88	5/18/88, 53 FR 17700.	
K.A.R. 28–19–66	Volatile Organic Compounds (VOC) Liquid Storage in External Floating Roof Tanks.	5/1/88	5/18/88, 53 FR 17700.	
K.A.R. 28–19–67	Petroleum Refineries	5/1/86	1/2/87, 52 FR 53.	
K.A.R. 28–19–68	Leaks from Petroleum Refinery Equipment.	5/1/86	1/2/87, 52 FR 53.	
K.A.R. 28–19–69	Cutback Asphalt	5/1/88	5/18/88, 53 FR 17700	
K.A.R. 28–19–70	Leaks from Gasoline Delivery Vessels and Vapor Collection Systems.	5/15/98	1/11/00, 65 FR 1548.	
K.A.R. 28–19–71	Printing Operations	5/1/88	5/18/88, 53 FR 17700.	
K.A.R. 28–19–72	Gasoline Dispensing Facilities	5/1/88	5/18/88, 53 FR 17700	
K.A.R. 28–19–73	Surface Coating of Miscellaneous Metal Parts and Products and Metal Furniture.	6/8/92	1/12/93, 58 FR 3847.	
K.A.R. 28–19–74	Wool Fiberglass Manufacturing	5/1/88	5/18/88, 53 FR 17700.	
K.A.R. 28–19–76	Lithography Printing Operations	10/7/91	6/23/92, 57 FR 27936.	
K.A.R. 28–19–77	Chemical Processing Facilities That Operate Alcohol Plants or Liquid Detergent Plants.	10/7/91	6/23/92, 57 FR 27936.	
General Provisions				
K.A.R. 28–19–200	General Provisions; definitions	10/10/97	1/11/00, 65 FR 1548	New rule. Replaces K.A.R. 28–19–7 definitions.
K.A.R. 28–19–201	General provisions; Regulated Compounds List.	10/10/97	1/11/00, 65 FR 1548	New rule. Replaces Regulated Compounds in K.A.R. 28–19–7.
K.A.R. 28–19–204	Permit Issuance and Modification; Public Participation.	1/23/95	7/17/95, 60 FR 36361.	
K.A.R. 28–19–210	Calculation of Actual Emissions	11/22/93	1/11/00, 65 FR 1548.	
K.A.R. 28–19–212	Approved Test Methods and Emission Compliance Determination Procedures.	1/12/95	7/17/95, 60 FR 36361.	
Construction Permits and Approvals				
K.A.R. 28–19–300	Applicability	1/23/95	7/17/95, 60 FR 36361.	
K.A.R. 28–19–301	Application and Issuance	1/23/95	7/17/95, 60 FR 36361.	
K.A.R. 28–19–302	Additional Provisions; Construction Permits.	1/23/95	7/17/95, 60 FR 36361.	
K.A.R. 28–19–303	Additional Provisions; Construction Approvals.	1/23/95	7/17/95, 60 FR 36361.	
K.A.R. 28–19–304	Fees	1/23/95	7/17/95, 60 FR 36361.	
K.A.R. 28–19–350	Prevention of Significant Deterioration of Air Quality.	11/22/02	02/26/03, 68 FR 8846.	
General Permits				
K.A.R. 28–19–400	General Requirements	1/23/95	7/17/95, 60 FR 36361.	

EPA—APPROVED KANSAS REGULATIONS—Continued

Kansas citation	Title	State effective date	EPA approval date	Explanation
K.A.R. 28–19–401	Adoption by the Secretary	1/23/95	7/17/95, 60 FR 36361.	
K.A.R. 28–19–402	Availability of Copies; Lists of Sources to Which Permits Issued.	1/23/95	7/17/95, 60 FR 36361.	
K.A.R. 28–19–403	Application to Construct or Operate Pursuant to Terms of General Permits.	1/23/95	7/17/95, 60 FR 36361.	
K.A.R. 28–19–404	Modification, Revocation	1/23/95	7/17/95, 60 FR 36361.	
Operating Permits				
K.A.R. 28–19–500	Applicability	1/23/95	7/17/95, 60 FR 36361.	
K.A.R. 28–19–501	Emissions Limitations and Pollution Control Equipment for Class I and Class II Operating Permits; Conditions.	1/23/95	7/17/95, 60 FR 36361.	
K.A.R. 28–19–502	Identical Procedural Requirements.	1/23/95	7/17/95, 60 FR 36361.	
Class II Operating Permits				
K.A.R. 28–19–540	Applicability	1/23/95	7/17/95, 60 FR 36361.	
K.A.R. 28–19–541	Application Timetable and Contents.	1/23/95	7/17/95, 60 FR 36361.	
K.A.R. 28–19–542	Permit-by-Rule	1/23/95	7/17/95, 60 FR 36361.	
K.A.R. 28–19–543	Permit Term and Content; Operational Compliance.	1/23/95	7/17/95, 60 FR 36361.	
K.A.R. 28–19–544	Modification of Sources or Operations.	1/23/95	7/17/95, 60 FR 36361.	
K.A.R. 28–19–545	Application Fee	1/23/95	7/17/95, 60 FR 36361.	
K.A.R. 28–19–546	Annual Emission Inventory	1/23/95	7/17/95, 60 FR 36361.	
K.A.R. 28–19–561	Permit-by-Rule; Reciprocating Engines.	1/23/95	7/17/95, 60 FR 36361.	
K.A.R. 28–19–562	Permit-by-Rule; Organic Solvent Evaporative Sources.	1/23/95	7/17/95, 60 FR 36361.	
K.A.R. 28–19–563	Permit-by-Rule; Hot Mix Asphalt Facilities.	1/23/95	7/17/95, 60 FR 36361.	
K.A.R. 28–19–564	Permit-by-Rule; Sources with Actual Emissions Less Than 50 Percent of Major Source Thresholds.	10/04/02	3/26/03, 68 FR 14541.	
Open Burning Restrictions				
K.A.R. 28–19–645	Open Burning Prohibited	3/1/96	10/2/96, 61 FR 51366.	
K.A.R. 28–19–646	Responsibility for Open Burning	3/1/96	10/2/96, 61 FR 51366.	
K.A.R. 28–19–647	Exceptions to Prohibition on Open Burning.	3/1/96	10/2/96, 61 FR 51366.	
K.A.R. 28–19–648	Agricultural Open Burning	3/1/96	10/2/96, 61 FR 51366.	
K.A.R. 28–19–650	Emissions Opacity Limits	1/29/99	1/11/00, 65 FR 1548	New rule. Replaces K.A.R. 28–19–50 and 28–19–52.
Volatile Organic Compound Emissions				
K.A.R. 28–19–714	Control of Emissions from Solvent Metal Cleaning.	9/1/02	10/30/02, 67 FR 66060.	

EPA—APPROVED KANSAS REGULATIONS—Continued

Kansas citation	Title	State effective date	EPA approval date	Explanation
K.A.R. 28–19–717	Control of Volataile Organic Compound (VOC) Emissions from Commercial Bakery Ovens in Johnson and Wyandotte Counties.	12/22/00	12/12/01, 66 FR 64148.	
K.A.R. 28–19–719	Fuel Volatility	4/27/01	2/13/02, 67 FR 6658.	
Conformity				
K.A.R. 28–19–800	General Conformity of Federal Actions.	3/15/96	10/2/96, 61 FR 51366.	

(d) *EPA-approved State source-specific permits.*

EPA-APPROVED KANSAS SOURCE-SPECIFIC PERMITS

Name of source	Permit No.	State effective date	EPA approval date	Explanation
(1) Board of Public Utilities, Quindaro Power Station	2090048	10/20/93	10/18/94, 59 FR 52425.	
(2) Board of Public Utilities, Kaw Power Station	2090049	10/20/93	10/18/94, 59 FR 52425.	

(e) *EPA-approved nonregulatory provisions and quasi-regulatory measures.*

EPA—APPROVED KANSAS NONREGULATORY PROVISIONS

Name of nonregulatory SIP provision	Applicable geographic or nonattainment area	State submittal date	EPA approval date	Explanation
(1) Implementation Plan for Attainment and Maintenance of the National Air Quality Standards.	Statewide	1/31/72	5/31/72, 37 FR 10867.	
(2) Comments on the Plan in Response to EPA Review	Kansas City	3/24/72	6/22/73, 38 FR 46565.	Correction notice published 3/2/76.
(3) Emergency Episode Operations/Communications Manual	Kansas City	4/6/72	11/8/73, 38 FR 30876.	Correction notice published 3/2/76.
(4) Emergency Episode Operations/Communications Manual	Statewide except Kanasa City.	2/15/73	11/8/73, 38 FR 30876.	Correction notice published 3/2/76.
(5) Letter Concerning Attainment of CO Standards	Kansas City	5/29/73	11/8/73, 38 FR 30876.	Correction notice published 3/2/76.
(6) Amendment to State Air Quality Control Law Dealing with Public Access to Emissions Data.	Statewide	7/27/73	11/8/73, 38 FR 30876.	Correction notice published 3/2/76.
(7) Analysis and Recommendations Concerning Designation of Air Quality Maintenance Areas.	Statewide	2/2874	3/2/76, 41 FR 8960.	
(8) Ozone Nonattainment Plan	Kansas City	9/17/79	4/3/81, 46 FR 20165.	
(9) Ozone Nonattainment Plan	Douglas County	10/22/79	4/3/81, 46 FR 20165.	
(10) TSP Nonattainment Plan	Kansas City	3/10/80	4/3/81, 46 FR 20165.	
(11) Lead Plan	Statewide	2/17/81	10/22/81, 46 FR 51742.	
(12) CO Nonattainment Plan	Wichita	4/16/81	12/15/81, 46 FR 61117.	
(13) Air Monitoring Plan	Statewide	10/16/81	1/22/82, 47 FR 3112.	
(14) Letter and Supporting Documentation Relating to Reasonably Available Control Technology for Certain Particulate Matter Sources.	Kansas City	9/15/81	6/18/82, 47 FR 26387.	Correction notice published 1/12/84.
(15) Letter Agreeing to Follow EPA Interim Stack Height Policy for Each PSD Permit Issued Until EPA Revises the Stack Height Regulations.	Statewide	6/20/84	12/11/84, 49 FR 48185.	
(16) Letters Pertaining to Permit Fees	Statewide	3/27/86 9/15/87	12/21/87, 52 FR 48265.	
(17) Revisions to the Ozone Attainment Plan	Kansas City	7/2/86 4/16/87 8/18/87 8/19/87 1/6/88	5/18/88, 53 FR 17700.	
(18) Revised CO Plan	Wichita	3/1/85 9/3/87	10/28/88, 53 FR 43691.	
(19) Letter Pertaining to the Effective Date of Continuous Emission Monitoring Regulations.	Statewide	1/6/88	11/25/88, 53 FR 47690.	
(20) Letters Pertaining to New Source Permit Regulations, Stack Height Regulations, and Stack Height Analysis and Negative Declarations.	Statewide	3/27/86 12/7/87 1/6/88	4/20/89, 54 FR 15934.	
(21) PM_{10} Plan	Statewide	10/5/89 10/16/89	1/16/90, 55 FR 1422.	
(22) Ozone Maintenance Plan	Kansas City	10/23/91	6/23/92, 57 FR 27936.	
(23) Letter Pertaining to PSD NO_X Requirements	Statewide	9/15/92	1/12/93, 58 FR 3847.	
(24) Small Business Assistance Plan	Statewide	1/25/94	5/12/94, 59 FR 24644.	
(25) Letter Regarding Compliance Verification Methods and Schedules Pertaining to the Board of Public Utilities Power Plants.	Kansas City	12/11/92	10/18/94, 59 FR 52425.	

(26) Emissions Inventory Update Including a Motor Vehicle Emissions Budget ...	Kansas City	5/11/95	4/25/96, 59 FR 52425.	
(27) Air monitoring plan	Statewide	1/6/02	8/30/02, 67 FR 55728.	
(28) Maintenance Plan for the 1-hour ozone standard in the Kansas portion of the Kansas City maintenance area for the second ten- year period.	Kansas City	01/09/03	01/13/04.	

[64 FR 7098, Feb. 12, 1999, as amended at 65 FR 1547, Jan. 11, 2000; 65 FR 39551, June 27, 2000; 66 FR 64150, Dec. 12, 2001; 67 FR 6658, Feb. 13, 2002; 67 FR 55728, Aug. 30, 2002; 67 FR 66060, Oct. 30, 2002; 68 FR 8846, Feb. 26, 2003; 68 FR 14541, Mar. 26, 2003; 68 FR 34545, June 10, 2003; 68 FR 64533, Nov. 14, 2003; 69 FR 1921, Jan. 13, 2004]

§ 52.871 Classification of regions.

The Kansas plan was evaluated on the basis of the following classifications:

Air quality control region	Pollutant				
	Particulate matter	Sulfur oxides	Nitrogen dioxide	Carbon monoxide	Photochemical oxidants (hydrocarbons)
Metropolitan Kansas City Interstate	I	III	III	I	I
South Central Kansas Intrastate	I	III	III	III	I
Northeast Kansas Intrastate	I	III	III	III	III
Southeast Kansas Intrastate	III	III	III	III	III
North Central Kansas Intrastate	I	III	III	III	III
Northwest Kansas Intrastate	I	III	III	III	III
Southwest Kansas Intrastate	I	III	III	III	III

[37 FR 10867, May 31, 1972]

§ 52.872 Operating permits.

Emission limitations and related provisions which are established in Kansas operating permits as Federally enforceable conditions shall be enforceable by EPA. EPA reserves the right to deem permit conditions not Federally enforceable. Such a determination will be made according to appropriate procedures and be based upon the permit, permit approval procedures, or permit requirements which do not conform with the operating permit program requirements or the requirements of EPA underlying regulations.

[60 FR 36364, July 17, 1995]

§ 52.873 Approval status.

(a) The Kansas portion of the Kansas City metropolitan area was designated as nonattainment for ozone in 40 CFR part 81. Therefore, the Administrator approves continuation of the 7.8 RVP limit as federally enforceable in the Kansas City metropolitan area, even after the area is redesignated to attainment, because of its nonattainment designation effective January 6, 1992. Also, the requirement for 7.8 psi RVP volatility is deemed necessary to ensure attainment and maintenance of the ozone standard as demonstrated by the emissions inventory projections (based on use of 7.8 psi RVP) in Kansas' ozone maintenance plan for the Kansas City metropolitan area.

(b) [Reserved]

(c) The Administrator approves Rule K.A.R. 28–19–31 as identified at § 52.870(c)(29), with the understanding that any alternative compliance plans issued under this rule must be approved by EPA as individual SIP revisions.

[37 FR 10867, May 31, 1972, as amended at 46 FR 20170, Apr. 3, 1981; 46 FR 61118, Dec. 15, 1981; 57 FR 27939, June 23, 1992; 59 FR 52427, Oct. 18, 1994; 61 FR 16061, Apr. 11, 1996]

§ 52.874 Legal authority.

(a) The requirements of § 51.230(f) of this chapter are not met since authority to make emission data available to the public is inadequate. Kansas Statutes Annotated 65–3015 would require confidential treatment if the data related to processes or production unique to the owner or would tend to affect adversely the competitive position of the owner.

(b) The requirements of § 51.232(b) of this chapter are not met since the following deficiencies exist in the local agency legal authority:

(1) *Kansas City, Kans.-Wyandotte County Health Department.* (i) Authority to make emission data available to the public is inadequate because the Kansas Statutes Annotated 65–3016 provides

a designated local air quality conservation authority with the same authority as the State (§ 51.230(f) of this chapter).

(2) *Topeka-Shawnee County Health Department.* (i) Authority to make emission data available to the public is inadequate because the Kansas Statutes Annotated 65–3016 provides a designated air quality conservation authority with the same authority as the State (§ 51.230(f) of this chapter).

(3) *Wichita-Sedgwick County Health Department.* (i) Authority to make emission data available to the public is inadequate because the Kansas Statutes Annotated 65–3016 provides a designated local air quality conservation authority with the same authority as the State (§ 51.230(f) of this chapter).

(c) The requirements of § 51.230(d) of this chapter are not met since statutory authority to prevent construction, modification, or operation of a facility, building, structure, or installation, or combination thereof, which indirectly results or may result in emissions of any air pollutant at any location which will prevent the maintenance of a national air quality standard is not adequate.

[37 FR 10867, May 31, 1972, as amended at 39 FR 7281, Feb. 25, 1974; 51 FR 40676, Nov. 7, 1986]

§ 52.875 Original identification of plan section.

(a) This section identifies the original "Air Quality Implementation Plan for the State of Kansas" and all revisions submitted by Kansas that were Federally approved prior to July 1, 1998.

(b) The plan was officially submitted on January 31, 1972.

(c) The plan revisions listed below were submitted on the dates specified.

(1) Various comments on the plan in response to the Regions review were submitted on March 24, 1972, by the State Department of Health. (Non-regulatory)

(2) The Emergency Episode Operations/Communications Manual for the Kansas City Interstate AQCR was submitted on April 6, 1972, by the State Department of Health. (Non-regulatory)

(3) Emergency Episode Operations/Communications Manual for all Kansas Intrastate AQCR's was submitted on February 15, 1973, by the State Department of Health. (Non-regulatory)

(4) Revisions of sections 28–19–6 through 15, 20–24, 30–32, 40–47, 50–52 and 55–58 of the State air pollution control regulations were submitted by the State Department of Health on April 17, 1973.

(5) Letter from the Governor, dated May 29, 1973, concerning the attainment of CO emission standards. (Non-regulatory)

(6) An amendment to the State air quality control law, Senate Bill No. 30, dealing with public access to emission data was submitted on July 27, 1973, by the Governor.

(7) Revisions of sections 28–19–8, 9, 14, 22, 25 and and 47 of the State air pollution control regulations were submitted on February 6, 1974, by the Governor.

(8) Copy of the State's analysis and recommendations concerning the designation of Air Quality Maintenance Areas was submitted by letter from the State Department of Health on February 28, 1974. (Non-regulatory)

(9) Kansas submitted State Implementation Plan (SIP) revisions to attain the National Ambient Air Quality Standards on September 17, 1979 for Wyandotte and Johnson Counties, on October 22, 1979 for Douglas County, and on March 10, 1980 for Kansas City of the state designated nonattainment areas under section 107 of the Clean Air Act as amended in 1977. On September 22 and 25, 1980, the state submitted revised regulations on the control of volatile organic compounds and a regulation on the new source permit review program. Included in the plan are the following approved state air pollution control regulations:

(i) The VOC regulations which EPA approved as RACT: 28–19–61 Definitions, 28–19–62 Testing Procedures, 28–19–63 Automobile and Light Duty Trunk Surface Coating, 28–19–65 Petroleum Liquid Storage Tanks, 28–19–66 Petroleum Liquid Storage in External Floating Roof Tanks, 28–19–67 Petroleum Refineries, 28–19–68 Leaks from Petroleum Refinery Equipment, 28–19–69 Cutback Asphalt.

(ii) The New Source Permit Review regulation 28–19–16 through 16m which

EPA conditionally approved as meeting the requirements of sections 172(b)(6); 172(b)(11)(A), and 173.

(iii) The Kansas City-Wyandotte County air pollution control regulations which have been adopted by both the Kansas City, Kansas Board of City Commissioners and the Wyandotte County Board of County Commissioners:

2A–1 Jurisdiction, 2A–2 Purpose, 2A–3 Definitions, 2A–4 Powers of the Board, 2A–5 Facts and Circumstances Pertinent to Orders of Joint Board, 2A–6 Right of Entry for Inspection, 2A–7 Time for Compliance Schedule, 2A–8 Variance, 2A–9 Circumvention of Chapter or Regulations, 2A–10 Air Pollution Nuisances Prohibited; Additional Emission Restrictions; Interference with the Enjoyment of Life and Property, 2A–11 Reserved, 2A–12 Confidential Information, 2A–13 Registration and Permit System; Exemptions, 2A–14 Review of New or Altered Sources, 2A–15 Public Hearings, 2A–16 Installations in which Fuel is Burned, 2A–17 Restriction of Emission of Particulate Matter from Industrial Processes, 2A–18 Open Burning Prohibition, 2A–19 Opacity Requirements, 2A–20 Exceptions Due to Breakdowns or Scheduled Maintenance, 2A–21 Preventing Particulate Matter from Becoming Air-Borne, 2A–22 Measurement of Emissions, 2A–23 Restriction of Emission of Odors, 2A–24 Sulfur Compound Emissions, 2A–24.1 Hydrocarbon Emissions; Stationary Sources, 2A–25 Control of Carbon Monoxide Emissions, 2A–26 Control of Nitrogen Oxide Emissions, 2A–26.1 Incinerators, 2A–27 Air Pollution Emergencies—General Provisions, 2A–28 Air Pollution Emergencies—Episode Criteria, 2A–29 Emission Reduction Requirements, 2A–30 Emergency Episode Plans, 2A–31 Penalties for Violation of Chapter or Air Pollution Control Regulations, and 2A–32 Conflict of Ordinances, Effect Partial Invalidity.

(10) The Kansas State Implementation Plan for lead was submitted on February 17, 1981, by the Governor of Kansas, along with a submittal letter which provided additional information concerning the Kansas State Implementation Plan for lead.

(11) Kansas submitted SIP revisions to attain and maintain the National Ambient Air Quality Standards for carbon monoxide on April 16, 1981, for the South Central Kansas Interstate Air Quality Control Region, Wichita nonattainment area. The plan included commitments to complete transportation control measures for the reduction of carbon monoxide from transportation related sources for the attainment of the national standards by December 31, 1982.

(12) A plan revision which makes modifications to the existing Kansas air quality surveillance network was submitted by the Kansas Department of Health and Environment on October 16, 1981.

(13) Additional information to correct two plan deficiencies was submitted by the Kansas Department of Health and Environment on May 12, 1981.

(14) Letter and supporting documents submitted on September 15, 1981, from the Director of Air Quality and Occupational Health relating to reasonably available control technology for certain particulate matter sources in the Kansas City, Kansas area.

(15) New regulations 28–19–70 and 28–19–62 applicable to tank trucks operating at bulk gasoline terminals were submitted by the Kansas Department of Health and Environment on June 15, 1982. State regulation 28–19–51 is revoked. Revised regulations 28–19–16, 28–19–16a, 28–19–16b, 28–19–16c, 28–19–16f, 28–19–16g, 28–19–16h, and 28–19–16i, applicable to new sources in nonattainment areas were included with the June 15, 1982 submittal. Action is deferred on the following regulations: 28–19–16a(d), 28–19–16a(v), 28–19–16, 28–19–16b, 28–19–16c, 28–19–16f, 28–19–16h, 28–19–16i, and 28–19–16a(o). The remainder of the provisions are approved.

(16) New regulations K.A.R. 28–19–17 through K.A.R. 28–19–171 applicable to stationary sources subject to prevention of significant deterioration (PSD) permit requirements were submitted on May 5, 1983. Regulation K.A.R. 28–19–171 pertaining to the use of innovative control technology is not approved. By letter dated June 20, 1984, the State of Kansas agrees to follow the EPA interim stack height policy for each PSD permit issued until such time as EPA revises its general stack height regulations.

(17) Revised regulation K.A.R. 28–19–69, applicable to the use of cutback asphalt, was submitted by the Secretary of the Kansas Department of Health and Environment on February 21, 1986.

(i) Incorporation by reference.

(A) Revised regulation K.A.R. 28–19–69 as approved by the Kansas Attorney General on December 5, 1985.

(18) Revised regulations K.A.R. 28–19–63 applicable to automobile and light-duty truck surface coating; K.A.R. 28–19–64 applicable to bulk gasoline terminals; K.A.R. 28–19–67 applicable to petroleum refineries; and K.A.R. 28–19–68 applicable to leaks at petroleum refineries, were submitted by the Secretary of the Kansas Department of Health and Environment on February 21, 1986.

(i) Incorporation by reference. (A) Revised regulations K.A.R. 28–19–63, K.A.R. 28–19–64, K.A.R. 28–19–67, and K.A.R. 28–19–68 as approved by the Kansas Attorney General on October 30, 1985.

(19) Revised Kansas regulations pertaining to fees for permits to construct and operate were submitted by the Kansas Department of Health and Environment on March 27, 1986.

(i) Incorporation by reference.

(A) Kansas Administrative Regulations (KAR) 28–19–7, 28–19–8, 28–19–9, 28–19–14, 14(a) and 14(b), 28–19–31, 28–19–45, which became effective on May 1, 1986.

(B) Letter of March 27, 1986 to EPA from the State of Kansas Department of Health and Environment.

(C) Letter of September 15, 1987 to EPA from the State of Kansas Department of Health and Environment.

(20) Revisions to the ozone attainment plan for the Kansas City metropolitan area were submitted by the Governor on July 2, 1986. Pursuant to this plan, revised regulations for the control of volatile organic compound emissions were submitted by the Secretary of the Kansas Department of Health and Environment on January 6, 1988. In numerous instances, the revised Kansas regulations provide for departmental discretion to approve compliance plans and test methods which are alternatives to the EPA reference methods. EPA approves these regulations with the understanding that all such alternative compliance plans and test methods must be submitted to EPA, and approved, as individual SIP revisions. In the absence of such approval, the enforceable requirements of the SIP shall be the emission limits or reduction requirements stated in the regulations. Also, the Kansas regulations contain provisions whereby testing is required when the facility intends to demonstrate compliance by improved operations or new emission controls, yet no test procedures are specified. Examples of such provisions are transfer efficiency (TE) and vapor processing systems. Test methods which are developed by the state must be approved by EPA before facilities may demonstrate compliance through alternative controls and/or TE.

(i) Incorporation by reference.

(A) Revised regulations K.A.R. 28–19–8, Reporting required; K.A.R. 28–19–61, Definitions; K.A.R. 28–19–62, Testing procedures; K.A.R. 28–19–63, Automobile and light-duty truck surface coating; K.A.R. 28–19–64, Bulk gasoline terminals; K.A.R. 28–19–65, VOC liquid storage in permanent fixed roof type tanks; K.A.R. 28–19–66, VOC liquid storage in external floating roof tanks; K.A.R. 28–19–69, Cutback asphalt; K.A.R. 28–19–70, Leaks from gasoline delivery vessels and vapor collection systems; K.A.R. 28–19–71, Printing operations; K.A.R. 28–19–72, Gasoline dispensing facilities; K.A.R. 28–19–73, Surface coating of miscellaneous metal parts and products and metal furniture; K.A.R. 28–19–74, Wool fiberglass manufacturing; and K.A.R. 28–19–75, Solvent metal cleaning. Temporary versions of these regulations are effective December 16, 1987, through April 30, 1988. The permanent regulations are effective May 1, 1988.

(B) Letter of January 6, 1988, from the Secretary of the Kansas Department of Health and Environment. This letter establishes the effective dates for the revised regulations referenced in subparagraph (20)(i)(A) above.

(ii) Additional material.

(A) State of Kansas Implementation Plan, Part A—Kansas City Metropolitan Area, Ozone, dated June 1986, submitted by the Governor on July 2, 1986. The plan contains an attainment demonstration, emissions inventories, and a control strategy.

(B) Supplemental information, pursuant to the above referenced plan, was submitted on August 19, 1987.

(C) Negative declarations for certain VOC source categories were submitted on April 16 and August 18, 1987.

(21) Revised Kansas regulations applicable to air quality models and definitions were submitted by the Kansas Department of Health and Environment on January 6, 1988.

(i) Incorporation by reference.

(A) Kansas Administrative Regulations (K.A.R.) 28–19–17(f) and 28–19–7 (a) through (f) and (h) through (w) which became effective December 16, 1987. EPA is deferring action on 28–19–7(g), *Emission Limitation and Standard*.

(22) On March 1, 1985, the Governor of Kansas submitted a revised carbon monoxide state implementation plan for Wichita, Kansas. On September 3, 1987, the Kansas Department of Health and Environment submitted two new transportation control measures as part of the revised Wichita carbon monoxide control plan.

(i) Incorporation by reference. (A) Letter of September 3, 1987, from the Kansas Department of Health and Environment and attached transportation control measures adopted August 18, 1987.

(B) Revision of the Wichita-Sedgwick County Portion of the Kansas State Implementation Plan for Carbon Monoxide submitted by the Governor on March 1, 1985. The plan contains an attainment demonstration, emissions inventory, and a control strategy.

(23) Kansas Administrative Regulations (K.A.R.) 28–19–19(a) through 28–19–19(o) pertaining to continuous emission monitoring at certain stationary sources were submitted on January 6, 1988, by the Kansas Department of Health and Environment. K.A.R. 28–19–19(o) allows for departmental discretion on use of different but equivalent procedures than those specified in 28–19–19(a) through 28–19–19(n). EPA approves this rule with the understanding that all such equivalent procedures and requirements must be submitted to EPA as individual SIP revisions. In the absence of such approval, the enforceable provisions of K.A.R. 28–19–19(a) through 28–19–19(n) shall be applicable.

(i) Incorporation by reference. (A) K.A.R. 28–19–19(a) through 28–19–19(o), continuous emission monitoring, as submitted by the Secretary of the Kansas Department of Health and Environment. These regulations became effective on May 1, 1988.

(B) Letter of January 6, 1988, from the Secretary of the Kansas Department of Health and Environment. This letter establishes the effective date for the revised regulations referenced in paragraph (23)(i)(A) of this section.

(24) Revised regulations K.A.R. 28–19–7(g), K.A.R. 28–19–16, and K.A.R. 28–19–17 pertaining to new source permit requirements, were submitted by the Secretary of the Kansas Department of Health and Environment on March 27, 1986. Revised regulation K.A.R. 28–19–18 pertaining to stack heights was submitted by the Secretary of the Kansas Department of Health and Environment on January 6, 1988.

(i) Incorporation by reference.

(A) Revised regulations, K.A.R. 28–19–16, 28–19–16b, 28–19–16d, 28–19–16g, 28–19–16i, 28–19–161, 28–19–17, 28–19–17a, and 28–19–17b, which became effective on May 1, 1986.

(B) Revised regulations K.A.R. 28–19–7(g), and K.A.R. 28–19–18 through 28–19–18f. The temporary regulations became effective December 16, 1987, and became permanently effective on May 1, 1988.

(ii) Additional material.

(A) KDHE letter of March 27, 1986, to EPA pertaining to new source permit regulations.

(B) KDHE letter of January 6, 1988, and June 9, 1988, to EPA pertaining to stack height regulations.

(C) KDHE letters of December 7, 1987, and December 23, 1987, pertaining to the state's stack heights analysis and negative declarations.

(25) Revised Kansas Administrative Regulations (K.A.R.) pertaining to PM_{10} regulations and the PM_{10} committal SIP were submitted by Kansas on October 5, 1989.

(i) Incorporation by reference. (A) Revised regulations Article 19—Ambient Air Quality Standards and Air Pollution Control, K.A.R. 28–19–7, 28–19–8, 28–19–14, 28–19–16a, 28–19–17a, 28–19–17b, 28–19–17c, 28–19–17g, 28–19–17i, 28–19–20, 28–19–21, and 28–19–56, published August 31, 1989, effective October 16, 1989.

(ii) Additional material. (A) Letter of October 5, 1989, from the Secretary of the Kansas Department of Health and Environment (KDHE).

(B) Memorandum of October 16, 1989, from the Secretary of State (Kansas) to Stanley Grant (KDHE).

(C) Revised Air Quality Surveillance Monitoring Plan—Section E.

(26) Revisions to the state implementation plan for the Kansas City metropolitan area were submitted by the Governor on October 23, 1991. Revisions include a maintenance plan which demonstrates continued attainment of the NAAQS for ozone through the year 2002. Rule revisions were also submitted on October 23, 1991.

(i) Incorporation by reference,

(A) Article 19—Ambient Air Quality Standards and Air Pollution Control, revised Kansas Administrative Regulations (K.A.R.) 28–19–61, Definitions, and K.A.R. 28–19–62, Testing procedures; and new rules K.A.R. 28–19–76, Lithography printing facilities, and K.A.R. 28–19–77, Chemical processing facilities that operate alcohol plants or liquid detergent plants. These rules were published August 22, 1991, and became effective October 7, 1991.

(ii) Additional material

(A) State of Kansas Implementation Plan, Kansas City Metropolitan Area Maintenance Provisions, October 1991.

(27) On September 15, 1992, the Secretary of KDHE submitted rule revisions to K.A.R. 28–19–17, the PSD rule; to K.A.R. 28–19–19, the CEM rule; and to K.A.R. 28–19–73, a surface coating rule. These rule revisions were adopted by KDHE on April 3, 1992.

(i) Incorporation by reference,

(A) Revised regulations K.A.R. 28–19–17 through 28–19–171, K.A.R. 28–19–19 and K.A.R. 28–19–73, and new regulations K.A.R. 28–19–17m through 28–19–17q, effective June 8, 1992.

(ii) Additional material.

(A) Letter and attachment from KDHE dated September 15, 1992 pertaining to PSD NO_X requirements.

(28) A plan for implementation of the Small Business Stationary Source Technical and Environmental Compliance Assistance Program was submitted by the Kansas Department of Health and Environment as a revision to the Kansas State Implementation Plan (SIP) on January 25, 1994.

(i) Incorporation by reference.

(A) Kansas SIP, Small Business Stationary Source Technical and Environmental Compliance Assistance Program, dated November 15, 1993.

(29) On May 16, 1994 the Secretary of KDHE submitted revisions to rules K.A.R. 28–19–31, 28–19–32, 28–19–63, and operating permits #20090048 (BPU Quindaro station) and #20090049 (BPU Kaw station).

(i) Incorporation by reference.

(A) Revised regulations K.A.R. 28–19–31, K.A.R. 28–19–32, K.A.R. 28–19–63, effective November 8, 1993.

(B) Operating permits; Kansas City, Kansas, Board of Public Utilities Quindaro permit #20090048, and Kaw permit #20090049, effective October 20, 1993.

(ii) Additional material.

(A) Letter from BPU to KDHE dated December 11, 1992, regarding compliance verification methods and schedules.

(30) On February 17, 1995, the Secretary of the Kansas Department of Health and Environment (KDHE) submitted for approval numerous rule revisions which add and revise definitions, revise the Kansas construction permit program, and create a class II operating permit program.

(i) Incorporation by reference.

(A) Revised rules K.A.R. 28–19–7 effective November 22, 1993; K.A.R. 28–19–8 effective January 23, 1995; K.A.R. 28–19–14 effective January 24, 1994; and the revocation of K.A.R. 28–19–14a effective January 23, 1995; and the revocation of K.A.R. 28–19–14b effective January 24, 1994.

(B) New rules K.A.R. 28–19–204, 212, 300, 301, 302, 303, 304, 400, 401, 402, 403, 404, 500, 501, 502, 540, 541, 542, 543, 544, 545, 546, 561, 562, and 563 effective January 23, 1995.

(31) On May 11, 1995, the Kansas Department of Health and Environment submitted an emissions inventory update to the Kansas City maintenance plan approved by EPA on June 23, 1992. The submittal also establishes a motor vehicle emissions budget for the purpose of fulfilling the requirements of the Federal Transportation Conformity rule.

(i) Incorporation by reference.

(A) Kansas City Ozone Maintenance State Implementation Plan Revision: Emissions Inventories and Motor Vehicle Emissions Budgets for the Kansas City Metropolitan Area, adopted on May 11, 1995.

(32) A Plan revision was submitted by the Kansas Department of Health and Environment (KDHE) on June 6, 1996, which incorporates by reference the EPA's regulations relating to determining conformity of general Federal actions to State or Federal Implementation Plans, and which revokes old and adopts new open burning regulations.

(i) Incorporation by reference.

(A) Regulation K.A.R. 28–19–800, adopted by the Secretary of the KDHE on February 21, 1996, effective March 15, 1996.

(B) Regulations K.A.R. 28–19–645 to K.A.R. 28–19–648, adopted by the Secretary of KDHE on February 6, 1996, effective March 1, 1996.

(C) Regulations K.A.R. 28–19–45 to K.A.R. 28–19–47, revoked by the Secretary of KDHE on February 6, 1996, effective March 1, 1996.

(33) A revision to the Kansas SIP was submitted by the Kansas Department of Health and Environment on May 23, 1997, pertaining to fuel volatility.

(i) Incorporation by reference.

(A) K.A.R. 28–19–79, Fuel Volatility, effective May 2, 1997.

(d) Plan revisions were submitted on April 17, 1974, and February 17, 1974.

[37 FR 10867, May 31, 1972. Redesignated at 64 FR 7097, Feb. 12, 1999]

EDITORIAL NOTE: For FEDERAL REGISTER citations affecting § 52.875, see the List of CFR Sections Affected, which appears in the Finding Aids sections of the printed volume and on GPO Access.

§ 52.876 Compliance schedules.

(a) The requirements of § 51.260 and of § 51.15(a)(2) of this chapter as of September 19, 1976 (40 FR 43216), are not met since the plan does not contain legally enforceable compliance schedules setting forth the dates by which all stationary sources or categories of such sources must be in compliance with applicable portions of the control strategy. Paragraphs C and D of Kansas Regulation 28–19–9 specify that all sources not in compliance must submit an acceptable compliance schedule within 120 days after receiving notification from the State. There are no assurances that all sources will be notified by the State in a timely manner, therefore, paragraphs C and D of Regulation 28–19–9 are disapproved.

(b) *Federal compliance schedule.* (1) Except as provided in paragraph (2) of this paragraph (b), the owner or operator of any stationary source subject to any emission regulation which is part of the approved plan shall be in compliance on or before January 31, 1974.

(i) Any owner or operator in compliance with any such applicable regulation on the effective date of this paragraph shall certify such compliance to the Administrator no later than December 31, 1972.

(ii) Any owner or operator who achieves compliance with any such applicable regulation after the effective date of this paragraph shall certify such compliance to the Administrator within 5 days of the date compliance is achieved.

(2) An owner or operator of a stationary source subject to any emission regulation approved by the Administrator may no later than December 31, 1972, submit to the Administrator for approval a proposed compliance schedule that demonstrates compliance with such regulation as expeditiously as practicable, but no later than July 31, 1975. The compliance schedule shall provide for periodic increments of progress toward compliance. The dates for achievement of such increments shall be specified. Increments of progress shall include, but not be limited to: Letting of necessary contracts for construction or process changes, if applicable; initiation of construction; completion and startup of control systems; performance tests; and submittal of performance test analysis and results.

(3) Any owner or operator who submits a compliance schedule pursuant to this paragraph shall, within 5 days after the deadline for each increment of progress, certify to the Administrator whether or not the required increment of the approved compliance schedule has been met.

(4) Any compliance schedule adopted by the State and approved by the Administrator shall satisfy the requirements of this paragraph for the affected source.

(c) *State compliance schedules.* (1) [Reserved]

(2) The compliance schedules identified below are disapproved as not meeting the requirements of § 51.102 or subpart N of this chapter. All regulations cited are air pollution control regulations of the state, unless otherwise noted.

KANSAS

Source	Location	Regulation involved	Date adopted
Chanute Manufacturing Co., Inc.: sand blasting	Chanute	28–19–50	Dec. 14, 1973.
Kansas City Power & Light, coal transfer houses	LaCygne	28–19–50	Nov. 22, 1974.
Pence Food Center, incinerator	Chanute	28–19–40	Do.
Rodney Milling Co.:			
"A" house gallery and tunnel system	Topeka	28–19–50	Do.
"B" & "C" house gallery	.....do	28–19–50	Do.
Western Alfalfa Corp., alfalfa dehydrator	Deerfield	28–19–20	Do.
Do	Tice	28–19–20	Do.
Pence Food Center, incinerator	Humboldt	28–19–40	Do.
Sherwin-Williams Chemicals, Ozark P.M. Mill	Coffeyville	28–19–50B	Oct. 8, 1974.
Continental Grain Co., rail car loading	Hutchinson	28–19–50	Aug. 15, 1974.
Far-Mar-Co, Inc., headhouse cyclones	Topeka	28–19–50	Sept. 5, 1974.
Do	Hutchinson	28–19–50	Aug. 15, 1974.
Western Iron & Foundry, cupola	Wichita	28–19–20A, 28–19–50A.	Oct. 4, 1974.
Kansas Army Ammunition Plant, open burning	Parsons	28–19–45	Jan. 24, 1975.
Reid Grain, headhouse	Goodland	28–19–50	Do.
Sherwin-Williams Chemicals, black ash kiln	Coffeyville	28–19–50A	Do.
Cooperative Farm Chemicals, No. 1 NH_4 $NO_3$99-percent evaporator and prilling tower.	Lawrence	28–19–20	Mar. 28, 1975.
Sherwin-Williams Chemical Co., ozide calciner exhaust	Coffeyville	28–19–50A	Do.
Kaw Dehydrating Co., alfalfa dehydrator	Lawrence	28–19–20	Do.
Empire Dist. Electric Co.: Boilers Nos. 7 and 8	Riverton	28–19–31C	May 23, 1975.
Gulf Oil Chemicals Co.: Coal-fired boiler	Pittsburg	28–19–31	Do.
Kansas City Power & Light: Main boiler	La Cygne	28–19–31B	Do.
Mid-America Dairymen: Spray dryers Nos. 1 and 2	Sabetha	28–19–20	Do.
Tower Metal Products: Reverberatory furnace C	Fort Scott	28–19–50A	Do.
U.S. Steel—Universal Atlas Cement	Independence.		
Clay storage bin		28–19–50A	Do.
Stone storage bin		28–19–50A	Do.
Krupp Ball Mill No. 2		28–19–50A	Do.
Krupp Ball Mill No. 3		28–19–50A	Do.

[37 FR 19809, Sept. 22, 1972]

EDITORIAL NOTE: For FEDERAL REGISTER citations affecting § 52.876, see the List of CFR Sections Affected, which appears in the Finding Aids section of the printed volume and on GPO Access.

§§ 52.877–52.880 [Reserved]

§ 52.881 PM_{10} State implementation plan development in group II areas.

The state has submitted a committal SIP for Kansas City, Kansas. The committal SIP contains all the requirements identified in the July 1, 1987, promulgation of the SIP requirements for PM_{10} at 52 FR 24681, except the state will report the PM_{10} data which exceed the standard within 60 days of the exceedance, rather than 45 days.

[55 FR 1423, Jan. 16, 1990]

§§ 52.882–52.883 [Reserved]

§ 52.884 Significant deterioration of air quality.

(a) The requirements of section 160 through 165 of the Clean Air Act, as amended are met; except that:

(1) EPA retains PSD permit authority for Indian lands in the State of Kansas.

[49 FR 48186, Dec. 11, 1984, as amended at 54 FR 15935, Apr. 20, 1989; 58 FR 3848, Jan. 12, 1993]

Subpart S—Kentucky

§ 52.919 Identification of plan-conditional approval.

EPA is conditionally approving Rule 401 KAR 50:080, "Regulatory Limit on Potential to Emit," effective January 15, 2001, into the Kentucky SIP contingent on the Commonwealth clarifying language in sections 2(3) and (4) according to a projected promulgation schedule committed to in a letter dated April 18, 2002, from the Commonwealth of Kentucky to EPA Region 4.

[67 FR 53314, Aug. 15, 2002]

§ 52.920 Identification of plan.

(a) *Purpose and scope.* This section sets forth the applicable State Implementation Plan for Kentucky under section 110 of the Clean Air Act, 42 U.S.C. 7401, and 40 CFR part 51 to meet national ambient air quality standards.

(b) *Incorporation by reference.* (1) Material listed in paragraph (c) of this section with an EPA approval date prior to October 1, 2003, for the Commonwealth of Kentucky (Table 1) and November 23, 2001, for Jefferson County, Kentucky (Table 2) was approved for incorporation by reference by the Director of the Federal Register in accordance with 5 U.S.C. 552(a) and 1 CFR part 51. Material is incorporated as it exists on the date of the approval, and notice of any change in the material will be published in the FEDERAL REGISTER. Entries in paragraph (c), Table 1, and paragraph (d) of this section with EPA approval dates after October 1, 2003, will be incorporated by reference in the next update to the SIP compilation. Entries in paragraph (c), Table 2, with EPA approval dates after October 23, 2001, will be incorporated by reference in the next update to the Jefferson County portion of the Kentucky SIP compilation.

(2) EPA Region 4 certifies that the rules/regulations provided by EPA in the SIP compilation at the addresses in paragraph (b)(3) of this section are an exact duplicate of the officially promulgated state rules/regulations which have been approved as part of the State and Local Implementation Plans listed in paragraph (b)(1) of this section.

(3) Copies of the materials incorporated by reference may be inspected at the Region 4 EPA Office at 61 Forsyth Street, SW., Atlanta, GA 30303; at the EPA, Office of Air and Radiation Docket and Information Center, Room B–108, 1301 Constitution Avenue, (Mail Code 6102T) NW., Washington, DC 20460; or at the National Archives and Records Administration (NARA). For information on the availability of this material at NARA, call 202–741–6030, or go to: *http://www.archives.gov/federal_register/code_of_federal_regulations/ibr_locations.html.*

(c) *EPA approved regulations.*

TABLE 1.—EPA-APPROVED KENTUCKY REGULATIONS

State citation	Title/subject	State effective date	EPA approval date	Explanation
Chapter 50 Division for Air Quality; General Administrative Procedures				
401 KAR 50:005	General application	06/06/79	07/12/82, 47 FR 30059.	
401 KAR 50:010	Definitions and abbreviations of terms used in Title 401, Chapters 50, 51, 53, 55, 57, 59, 61, 63, and 65.	06/06/96	01/21/97, 62 FR 2915.	
401 KAR 50:012	General application	11/12/97	07/24/98, 63 FR 39739.	
401 KAR 50:015	Documents incorporated by reference	04/14/88	02/07/90, 55 FR 4169.	
401 KAR 50:020	Air quality control regions	06/06/79	07/12/82, 47 FR 30059.	
401 KAR 50:025	Classification of counties	06/01/83	04/02/96, 61 FR 14489.	

TABLE 1.—EPA-APPROVED KENTUCKY REGULATIONS—Continued

State citation	Title/subject	State effective date	EPA approval date	Explanation
401 KAR 50:030	Registration of sources	06/06/79	07/12/82, 47 FR 30059.	
401 KAR 50:032	Prohibitory rule for hot mix asphalt plants	04/13/98	03/10/00, 65 FR 12948.	
401 KAR 50:035	Permits	09/28/94	09/27/95, 60 FR 49775.	
401 KAR 50:040	Air quality models	06/06/79	07/12/82, 47 FR 30059.	
401 KAR 50:042	Good engineering practice stack height	06/10/86	09/04/87,52 FR 33592.	
401 KAR 50:045	Performance tests	06/06/79	07/12/82, 47 FR 30059.	
401 KAR 50:047	Test procedures for capture efficiency	06/24/92	06/23/94, 59 FR 32343.	
401 KAR 50:050	Monitoring	06/06/79	07/12/82, 47 FR 30059.	
401 KAR 50:055	General compliance requirements	09/22/82	05/04/89, 54 FR 19169.	
401 KAR 50:060	Enforcement	06/06/79	07/12/82, 47 FR 30059.	
401 KAR 50:065	Conformity of general federal actions	10/11/95	07/27/98, 63 FR 40044.	
Chapter 51 Attainment and Maintenance of the National Ambient Air Quality Standards				
401 KAR 51:001	Definitions for 401 KAR Chapter 51	12/18/02	06/24/03, 68 FR 37418.	
401 KAR 51:005	Purpose and general provisions	06/06/79	07/12/82, 47 FR 30059.	
401 KAR 51:010	Attainment status designations	11/12/97	07/24/98, 63 FR 39739.	
401 KAR 51:017	Prevention of significant deterioration of air quality	03/12/97	07/24/98, 63 FR 39741.	
401 KAR 51:052	Review of new sources in or impacting upon nonattainment areas.	02/08/93	06/23/94, 59 FR 32343.	
401 KAR 51:160	NO_X requirements for large utility and industrial boilers	12/18/02	06/24/03, 68 FR 37418.	
401 KAR 51:170	NO_X requirements for cement kilns	08/15/01	04/11/02, 67 FR 17624.	
401 KAR 51:180	NO_X credits for early reduction and emergency	08/15/01	04/11/02, 67 FR 17624.	
401 KAR 51:190	Banking and trading NO_X allowances	08/15/01	04/11/02, 67 FR 17624.	
401 KAR 51:195	NO_X opt-in provisions	08/15/01	04/11/02, 67 FR 17624.	

TABLE 1.—EPA-APPROVED KENTUCKY REGULATIONS—Continued

State citation	Title/subject	State effective date	EPA approval date	Explanation
	Chapter 53 Ambient Air Quality			
401 KAR 53:005	General provisions	04/14/88	02/07/90, 55 FR 4169.	
401 KAR 53:010	Ambient air quality standards	04/14/88	02/07/90 55 FR 4169.	
	Chapter 55 Emergency Episodes			
401 KAR 55:005	Significant harm criteria	04/14/88	02/07/90, 55 FR 4169.	
401 KAR 55:010	Episode criteria	04/14/88	02/07/90, 55 FR 4169.	
401 KAR 55:015	Episode declaration	06/06/79	01/25/80, 45 FR 6092.	
401 KAR 55:020	Abatement strategies	06/06/79	01/25/80, 45 FR 6092.	
	Chapter 59 New Source Standards			
401 KAR 59:001	Definitions and abbreviations of terms used in Title 401, Chapter 59.	06/06/96	01/21/97, 62 FR 2915.	
401 KAR 59:005	General provisions	12/01/82	12/04/86, 51 FR 43742.	
401 KAR 59:010	New process operations	04/14/88	02/07/90, 55 FR 4169.	
401 KAR 59:015	New indirect heat exchangers	01/07/81	03/22/83, 48 FR 11945.	
401 KAR 59:020	New incinerators	06/06/79	07/12/82, 47 FR 30059.	
401 KAR 59:046	Selected new petroleum refining processes and equipment	06/29/79	08/07/81, 46 FR 40188.	
401 KAR 59:050	New storage vessels for petroleum liquids	02/04/81	03/30/83, 48 FR 13168.	
401 KAR 59:080	New kraft (sulfate) pulp mills	06/06/79	01/25/80, 45 FR 6092.	
401 KAR 59:085	New sulfite pulp mills	06/06/79	07/12/82, 47 FR 30059.	
401 KAR 59:090	New ethylene producing plants	06/06/79	07/12/82, 47 FR 30059.	
401 KAR 59:095	New oil-effluent water separators	06/29/79	08/07/81, 46 FR 40188.	
401 KAR 59:101	New bulk gasoline plants	09/28/94	06/28/96, 61 FR 33674.	
401 KAR 59:105	New process gas steams	04/07/82	03/22/83, 48 FR 11945.	
401 KAR 59:174	Stage II controls at gasoline dispensing facilities	01/12/98	12/08/98, 63 FR 67586	

TABLE 1.—EPA-APPROVED KENTUCKY REGULATIONS—Continued

State citation	Title/subject	State effective date	EPA approval date	Explanation
401 KAR 59:175	New service stations	02/08/93	06/23/94, 59 FR 32343.	
401 KAR 59:185	New solvent metal cleaning equipment	06/24/92	06/23/94, 59 FR 32343.	
401 KAR 59:190	New insulation of magnet wire operations	06/24/92	06/23/94, 59 FR 32343.	
401 KAR 59:210	New fabric, vinyl and paper surface coating operations	06/24/92	06/23/94, 59 FR 32343.	
401 KAR 59:212	New graphic arts facilities using rotogravure and flexography	06/24/92	06/23/94, 59 FR 32343.	
401 KAR 59:214	New factory surface coating operations of flat wood paneling	06/24/92	06/23/94, 59 FR 32343.	
401 KAR 59:225	New miscellaneous metal parts and products surface coating operation.	06/24/92	06/23/94, 59 FR 32343.	
401 KAR 59:230	New synthesized pharmaceutical product manufacturing operations.	06/24/92	06/23/94, 59 FR 32343.	
401 KAR 59:235	New pneumatic rubber tire manufacturing plants	02/04/81	03/30/83, 48 FR 13168.	
401 KAR 59:240	New perchloroethylene dry cleaning systems	06/24/92	06/23/94, 59 FR 32343.	
401 KAR 59:315	Specific new sources	06/24/92	06/23/94, 59 FR 32343.	
	Chapter 61 Existing Source Standards			
401 KAR 61:001	Definitions and abbreviations of terms used in 401 KAR Chapter 61.	06/06/96	01/21/97, 62 FR 2915.	
401 KAR 61:005	General provisions	12/01/82	05/04/89, 54 FR 19169.	
401 KAR 61:010	Existing incinerators	06/06/79	05/04/89, 54 FR 19169.	
401 KAR 61:015	Existing indirect heat exchangers	06/01/83	04/02/96, 61 FR 14489.	
401 KAR 61:020	Existing process operations	04/14/88	02/07/90, 55 FR 4169.	
401 KAR 61:025	Existing kraft (sulfate) pulp mills	06/06/79	05/26/82, 47 FR 22955	
401 KAR 61:030	Existing sulfuric acid plants	06/06/79	03/22/83, 48 FR 11945.	
401 KAR 61:035	Existing process gas streams	04/07/82	03/22/83, 48 FR 11945.	
401 KAR 61:040	Existing ethylene producing plants	06/06/79	01/25/80, 45 FR 6092.	
401 KAR 61:045	Existing oil-effluent water separators	06/29/79	08/07/81, 46 FR 40188.	
401 KAR 61:050	Existing storage vessels for petroleum liquids	06/24/92	06/23/94, 59 FR 32345.	

TABLE 1.—EPA-APPROVED KENTUCKY REGULATIONS—Continued

State citation	Title/subject	State effective date	EPA approval date	Explanation
401 KAR 61:055	Existing loading facilities at bulk gasoline terminals	08/24/82	03/30/83, 48 FR 13168.	
401 KAR 61:056	Existing bulk gasoline plants	09/28/94	06/28/96, 61 FR 33674.	
401 KAR 61:060	Existing sources using organic solvents	06/29/79	01/25/80, 45 FR 6092.	
401 KAR 61:065	Existing nitric acid plants	06/06/79	07/12/82, 47 FR 30059.	
401 KAR 61:070	Existing ferroalloy production facilities	06/06/79	05/03/84, 49 FR 18833.	
401 KAR 61:075	Steel plants and foundries using existing electric arc furnaces	12/01/82	05/04/89, 54 FR 19169.	
401 KAR 61:080	Steel plants using existing basic oxygen process furnaces	04/01/84	05/04/89, 54 FR 19169.	
401 KAR 61:085	Existing service stations	02/08/93	06/23/94, 59 FR 32343.	
401 KAR 61:090	Existing automobile and light-duty truck surface coating operations.	06/24/92	06/23/94, 59 FR 32343.	
401 KAR 61:095	Existing solvent metal cleaning equipment	06/24/92	06/23/94, 59 FR 32343.	
401 KAR 61:100	Existing insulation of magnet wire operations	06/24/92	06/23/94, 59 FR 32343.	
401 KAR 61:105	Existing metal furniture surface coating operations	06/24/92	06/23/94, 59 FR 32343.	
401 KAR 61:110	Existing large appliance surface coating operations	06/24/92	06/23/94, 59 FR 32343.	
401 KAR 61:120	Existing fabric, vinyl and paper surface coating operations	06/24/92	06/23/94, 59 FR 32343.	
401 KAR 61:122	Existing graphic arts facilities using rotogravure and flexography	06/24/92	06/23/94, 59 FR 32343.	
401 KAR 61:124	Existing factory surface coating operations of flat wood paneling	06/24/92	06/23/94 59 FR 32343.	
401 KAR 61:125	Existing can surface coating operations	06/24/92	06/23/94, 59 FR 32343.	
401 KAR 61:130	Existing coil surface coating operations	06/24/92	06/23/94, 59 FR 32343.	
401 KAR 61:132	Existing miscellaneous metal parts and products surface coating operations.	06/24/92	06/23/94, 59 FR 32343.	
401 KAR 61:135	Selected existing petroleum refining processes and equipment	06/29/79	01/25/80, 45 FR 6092.	
401 KAR 61:137	Leaks from existing petroleum refinery equipment	06/24/92	06/23/94, 59 FR 32343.	
401 KAR 61:140	Existing by-product coke manufacturing plants	09/04/86	05/04/89, 54 FR 19169.	
401 KAR 61:145	Existing petroleum refineries	01/07/81	03/22/83, 48 FR 11945.	

TABLE 1.—EPA-APPROVED KENTUCKY REGULATIONS—Continued

State citation	Title/subject	State effective date	EPA approval date	Explanation
401 KAR 61:150	Existing synthesized pharmaceutical product manufacturing operations.	06/24/92	06/23/94, 59 FR 32343.	
401 KAR 61:155	Existing pneumatic rubber tire manufacturing plants	06/24/92	06/23/94, 59 FR 32343.	
401 KAR 61:160	Existing perchloroethylene dry cleaning systems	06/24/92	06/23/94, 59 FR 32343.	
401 KAR 61:165	Existing primary aluminum reduction plants	06/04/85	12/02/86, 51 FR 43395.	
401 KAR 61:170	Existing blast furnace casthouses	04/14/88	02/07/90, 55 FR 4169.	
401 KAR 61:175	Leaks from existing synthetic organic chemical and polymer manufacturing equipment.	06/24/92	06/23/94, 59 FR 32343.	
Chapter 63 General Standards of Performance				
401 KAR 63:001	Definitions and abbreviations of terms used in 401 KAR Chapter 63.	06/06/96	01/21/97, 62 FR 2915.	
401 KAR 63:005	Open burning	01/12/98	12/08/98, 63 FR 67586.	
401 KAR 63:010	Fugitive emissions	06/06/79	07/12/82, 47 FR 30059.	
401 KAR 63:015	Flares	06/06/79	12/24/80, 45 FR 84999.	
401 KAR 63:020	Potentially hazardous matter or toxic substances	06/06/79	12/24/80, 45 FR 84999.	
401 KAR 63:025	Asphalt paving operations	06/24/92	06/23/94, 59 FR 32343.	
401 KAR 63:031	Leaks from gasoline tank trunks	02/08/93	06/23/94, 59 FR 32343.	
Chapter 65 Mobile Source-Related Emissions				
401 KAR 65:001	Definitions and abbreviations of terms used in 401 KAR Chapter 65.	08/15/01	09/24/02, 67 FR 59785.	
401 KAR 65:005	Liquefied petroleum gas carburetion systems	06/06/79	01/25/80, 45 FR 6092.	
401 KAR 65:010	Vehicle emission control programs	08/15/01	09/24/02, 67 FR 59785.	

TABLE 2—EPA-APPROVED JEFFERSON COUNTY REGULATIONS FOR KENTUCKY

Reg	Title/subject	EPA approval date	Federal Register notice	District effective date
	Reg 1—General Provisions			
1.01	General Application of Regulations and Standards.	10/23/01	66 FR 53660	03/17/99
1.02	Definitions	11/19/02	67 FR 69688	12/19/01
1.03	Abbreviations and Acronyms	11/19/02	67 FR 69688	05/15/02
1.04	Performance Tests	10/23/01	66 FR 53660	11/19/97
1.05	Compliance with Emission Standards and Maintenance Requirements.	10/23/01	66 FR 53660	11/18/92
1.06	Source Self-Monitoring and Reporting	10/23/01	66 FR 53660	12/15/93

TABLE 2—EPA-APPROVED JEFFERSON COUNTY REGULATIONS FOR KENTUCKY—Continued

Reg	Title/subject	EPA approval date	Federal Register notice	District effective date
1.07	Emissions During Startups, Shutdowns, Malfunctions and Emergencies.	10/23/01	66 FR 53660	01/17/96
1.08	Administrative Procedures	11/03/03	68 FR 62236	06/19/02
1.09	Prohibition of Air Pollution	10/23/01	66 FR 53660	11/16/83
1.10	Circumvention	10/23/01	66 FR 53660	04/19/72
1.11	Control of Open Burning	10/23/01	66 FR 53660	02/22/90
1.14	Control of Fugitive Particulate Emissions	10/23/01	66 FR 53660	01/20/88
1.18	Rule Effectiveness	10/23/01	66 FR 53689	09/21/94
1.19	Administrative Hearings	11/19/02	67 FR 69688	05/15/02
	Reg 2—Permit Requirements			
2.01	General Application	10/23/01	66 FR 53660	04/21/82
2.02	Air Pollution Regulation Requirements and Exemptions.	10/23/01	66 FR 53660	06/21/95
2.03	Permit Requirements—Non-Title V Construction and Operating Permits and Demolition/Renovation Permits.	10/23/01	66 FR 53660	12/15/93
2.04	Construction or Modification of Major Sources in or Impacting Upon Non-Attainment Areas (Emission Offset Requirements).	10/23/01	66 FR 53660	03/17/93
2.05	Prevention of Significant Deterioration of Air Quality.	11/03/03	68 FR 62236	06/19/02
2.06	Permit Requirements—Other Sources	10/23/01	66 FR 53660	11/16/83
2.07	Public Notification for Title V, PSD, and Offset Permits; SIP Revisions; and Use of Emission Reduction Credits.	10/23/01	66 FR 53660	06/21/95
2.09	Causes for Permit Suspension	11/03/03	68 FR 62236	06/19/02
2.10	Stack Height Considerations	10/23/01	66 FR 53660	07/19/89
2.11	Air Quality Model Usage	10/23/01	66 FR 53660	05/19/99
2.17	Federally Enforceable District Origin Operating Permits.	11/03/03	68 FR 62236	06/19/02
	Reg—3 Ambient Air Quality Standards			
3.01	Purpose of Standards and Expression of Non-Degradation Intention.	10/23/01	66 FR 53660	06/13/79
3.02	Applicability of Ambient Air Quality Standards	10/23/01	66 FR 53660	06/13/79
3.03	Definitions	10/23/01	66 FR 53660	06/13/79
3.04	Ambient Air Quality Standards	10/23/01	66 FR 53660	04/20/88
3.05	Methods of Measurement	10/23/01	66 FR 53660	04/20/88
	Reg—4 Emergency Episodes			
4.01	General Provisions for Emergency Episodes	10/23/01	66 FR 53660	06/13/79
4.02	Episode Criteria	10/23/01	66 FR 53660	04/20/88
4.03	General Abatement Requirements	10/23/01	66 FR 53660	02/16/83
4.04	Particulate and Sulfur Dioxide Reduction Requirements.	10/23/01	66 FR 53660	04/19/72
4.05	Hydrocarbon and Nitrogen Oxides Reduction Requirements.	10/23/01	66 FR 53660	02/16/83
4.06	Carbon Monoxide Reduction Requirements	10/23/01	66 FR 53660	02/16/83
4.07	Episode Reporting Requirements	10/23/01	66 FR 53660	06/13/79
	Reg—6 Standards of Performance for Existing Affected Facilities			
6.01	General Provisions	10/23/01	66 FR 53660	11/16/83
6.02	Emission Monitoring for Existing Sources	10/23/01	66 FR 53660	11/16/83
6.07	Standards of Performance for Existing Indirect Heat Exchangers.	10/23/01	66 FR 53660	06/13/79
6.08	Standard of Performance for Existing Incinerators.	10/23/01	66 FR 53660	06/13/79
6.09	Standards of Performance for Existing Process Operations.	10/23/01	66 FR 53660	03/17/99
6.10	Standard of Performance for Existing Process Gas Streams.	10/23/01	66 FR 53660	11/16/83
6.12	Standard of Performance for Existing Asphalt Paving Operations.	10/23/01	66 FR 53661	05/15/91
6.13	Standard of Performance for Existing Storage Vessels for Volatile Organic Compounds.	10/23/01	66 FR 53661	05/15/91
6.14	Standard of Performance for Selected Existing Petroleum Refining Processes and Equipment.	10/23/01	66 FR 53661	04/21/82
6.15	Standard of Performance for Gasoline Transfer to Existing Service Station Storage Tanks (Stage I Vapor Recovery).	01/25/80	45 FR 6092	06/13/79
6.16	Standard of Performance for Existing Large Appliance Surface Coating Operations.	10/23/01	66 FR 53661	05/15/91

TABLE 2—EPA-APPROVED JEFFERSON COUNTY REGULATIONS FOR KENTUCKY—Continued

Reg	Title/subject	EPA approval date	Federal Register notice	District effective date
6.17	Standard of Performance for Existing Automobile and Truck Surface Coating Operations.	10/23/01	66 FR 53661	11/18/92
6.18	Standards of Performance for Existing Solvent Metal Cleaning Equipment.	11/19/02	67 FR 69688	05/15/02
6.19	Standard of Performance for Existing Metal Furniture Surface Coating Operations.	10/23/01	66 FR 53661	05/15/91
6.20	Standard of Performance for Existing Bulk Gasoline Plants.	10/23/01	66 FR 53661	11/16/83
6.21	Standard of Performance for Existing Gasoline Loading Facilities at Bulk Terminals.	10/23/01	66 FR 53661	11/16/83
6.22	Standard of Performance for Existing Volatile Organic Materials Loading Facilities.	10/23/01	66 FR 53661	03/17/93
6.24	Standard of Performance for Existing Sources Using Organic Materials.	10/23/01	66 FR 53661	03/17/93
6.26	Standards of Performance for Existing Volatile Organic Compound Water Separators.	10/23/01	66 FR 53661	06/13/79
6.27	Standards of Performance For Existing Liquid Waste Incinerators.	10/23/01	66 FR 53661	06/13/79
6.28	Standard of Performance for Existing Hot Air Aluminum Atomization Processes.	10/23/01	66 FR 53661	03/18/81
6.29	Standard of Performance for Existing Graphic Arts Facilities Using Rotogravure and Flexography.	10/23/01	66 FR 53661	05/15/91
6.30	Standard of Performance for Existing Factory Surface Coating Operations of Flat Wood Paneling.	10/23/01	66 FR 53661	05/15/91
6.31	Standard of Performance for Existing Miscellaneous Metal Parts and Products Surface-Coating Operations.	10/23/01	66 FR 53661	04/23/96
6.32	Standard of Performance for Leaks from Existing Petroleum Refinery Equipment.	10/23/01	66 FR 53661	05/15/91
6.33	Standard of Performance for Existing Synthesized Pharmaceutical Product Manufacturing Operations.	10/23/01	66 FR 53661	05/15/91
6.34	Standard of Performance for Existing Pneumatic Rubber Tire Manufacturing Plants.	10/23/01	66 FR 53661	05/15/91
6.35	Standard of Performance for Existing Fabric, Vinyl and Paper Surface Coating Operations.	10/23/01	66 FR 53661	05/15/91
6.38	Standard of Performance for Existing Air Oxidation Processes in Synthetic Organic Chemical Manufacturing Industries.	10/23/01	66 FR 53661	12/17/86
6.39	Standard of Performance for Equipment Leaks of Volatile Organic Compounds in Existing Synthetic Organic Chemical and Polymer Manufacturing Plants.	10/23/01	66 FR 53661	07/17/96
6.40	Standards of Performance for Gasoline Transfer to Motor Vehicles (Stage II Vapor Recovery and Control).	10/23/01	66 FR 53661	08/18/93
6.42	Reasonably Available Control Technology Requirements for Major Volatile Organic Compound- and Nitrogen Oxides-Emitting Facilities.	10/23/01	66 FR 53661	03/17/99
6.43	Volatile Organic Compound Reduction Requirements.	10/23/01	66 FR 53689	05/21/97
6.45	Standards of Performance for Existing Solid Waste Landfills.	10/23/01	66 FR 53689	02/02/94
6.44	Standards of Performance for Existing Commercial Motor Vehicle and Mobile Equipment Refinishing Operations.	10/23/01	66 FR 53661	09/20/95
6.46	Standards of Performance for Existing Ferroalloy and Calcium Carbide Production Facilities.	10/23/01	66 FR 53661	12/21/94
6.48	Standard of Performance for Existing Bakery Oven Operations.	10/23/01	66 FR 53661	07/19/95
6.49	Standards of Performance for Reactor Processes and Distillation Operations Processes in the Synthetic Organic Chemical Manufacturing Industry.	10/23/01	66 FR 53664	06/20/01
6.50	NO_X Requirements for Portland Cement Kilns ..	11/19/02	67 FR 69688	03/20/02

TABLE 2—EPA-APPROVED JEFFERSON COUNTY REGULATIONS FOR KENTUCKY—Continued

Reg	Title/subject	EPA approval date	Federal Register notice	District effective date
	Reg 7—Standards of Performance for New Affected Facilities			
7.01	General Provisions	10/23/01	66 FR 53661	05/17/00
7.06	Standards of Performance for New Indirect Heat Exchangers.	10/23/01	66 FR 53661	04/21/82
7.07	Standard of Performance for New Incinerators	10/23/01	66 FR 53661	09/15/93
7.08	Standards of Performance for New Process Operations.	10/23/01	66 FR 53661	03/17/99
7.09	Standards of Performance for New Process Gas Streams.	10/23/01	66 FR 53661	06/18/97
7.11	Standard of Performance for New Asphalt Paving Operations.	10/23/01	66 FR 53661	05/15/91
7.12	Standard of Performance for New Storage Vessels for Volatile Organic Compounds.	10/23/01	66 FR 53661	05/15/91
7.14	Standard of Performance for Selected New Petroleum Refining Processes and Equipment.	10/23/01	66 FR 53661	06/13/79
7.15	Standards of Performance for Gasoline Transfer to New Service Station Storage Tanks (Stage I Vapor Recovery).	10/23/01	66 FR 53662	04/20/88
7.18	Standards of Performance for New Solvent Metal Cleaning Equipment.	10/23/01	66 FR 53662	05/15/91
7.20	Standard of Performance for New Gasoline Loading Facilities at Bulk Plants.	10/23/01	66 FR 53662	11/16/83
7.22	Standard of Performance for New Volatile Organic Materials Loading Facilities.	10/23/01	66 FR 53662	03/17/93
7.25	Standard of Performance for New Sources Using Volatile Organic Compounds.	10/23/01	66 FR 53662	03/17/93
7.34	Standard of Performance for New Sulfite Pulp Mills.	10/23/01	66 FR 53662	06/13/79
7.35	Standard of Performance for New Ethylene Producing Plants.	10/23/01	66 FR 53662	06/13/79
7.36	Standard of Performance for New Volatile Organic Compound Water Separators.	10/23/01	66 FR 53662	06/13/79
7.51	Standard of Performance for New Liquid Waste Incinerators.	10/23/01	66 FR 53662	01/20/88
7.52	Standard of Performance for New Fabric, Vinyl, and Paper Surface Coating Operations.	10/23/01	66 FR 53662	05/15/91
7.55	Standard of Performance for New Insulation of Magnet Wire.	10/23/01	66 FR 53662	03/17/93
7.56	Standard of Performance for Leaks from New Petroleum Refinery Equipment.	10/23/01	66 FR 53662	05/15/91
7.57	Standard of Performance for New Graphic Arts Facilities Using Rotogravure and Flexography.	10/23/01	66 FR 53662	05/15/91
7.58	Standard of Performance for New Factory Surface Coating Operations of Flat Wood Paneling.	10/23/01	66 FR 53662	05/15/91
7.59	Standard of Performance for New Miscellaneous Metal Parts and Products Surface Coating Operations.	10/23/01	66 FR 53662	04/23/96
7.60	Standard of Performance for New Synthesized Pharmaceutical Product Manufacturing Operations.	10/23/01	66 FR 53662	05/15/91
7.77	Standards of Performance for New Blast Furnace Casthouses.	10/23/01	66 FR 53662	10/20/93
7.79	Standards of Performance for New Commercial Motor Vehicles and Mobile Equipment Refinishing Operations.	10/23/01	66 FR 53690	02/02/94
7.81	Standard of Performance for New or Modified Bakery Oven Operations.	10/23/01	66 FR 53662	05/17/00
	Reg 8—Mobile Source Emissions Control			
8.01	Mobile Source Emissions Control Requirements.	09/24/02	67 FR 59785	11/21/01
8.02	Vehicle Emissions Testing Procedure	09/24/02	67 FR 59785	11/21/01
8.03	Commuter Vehicle Testing Requirements	10/23/01	66 FR 53690	02/02/94

(d) *EPA-approved source specific requirements.*

EPA-APPROVED KENTUCKY SOURCE-SPECIFIC REQUIREMENTS

Name of source	Permit No.	State effective date	EPA approval date	Explanations
Bubble action at Kentucky Utilities Green River Plant.	N/A	12/01/80	06/15/81, 46 FR 31260.	
Bubble action at Corning Glassworks	N/A	05/18/81	10/29/81, 46 FR 53408.	
Bubble action at National Distillers Company's, Old Crow Plant.	N/A	12/24/80	09/14/81, 46 FR 45610.	
Bubble action at General Electric in Louisville	N/A	08/07/81	01/12/82, 47 FR 1291.	
Bubble action at Borden Chemical CO in Jefferson CO..	N/A	03/05/82	05/11/82, 47 FR 20125.	
Variance for seven perchloroethylene dry cleaners.	N/A	08/04/82	05/02/83, 48 FR 19176.	
Variance for two dry cleaners	N/A	01/27/83	05/05/83, 48 FR 20233.	
Variance for Jiffy and Hiland Dry Cleaners	N/A	04/25/84	04/18/85, 50 FR 15421.	
TVA Paradise Permit	KDEPDAQ Permit 0–87–012	06/29/87	08/25/89, 54 FR 35326.	
Opacity variance for boiler Units 1 and 2 of TVA's Paradise Steam Plant.	KDEPDAQ Permit 0–86–75	07/24/96	08/17/88, 53 FR 30998.	
Operating Permits for nine presses at the Alcan Foil Products facility—Louisville.	APCDJC Permits 103–74, 104–74, 105–74, 103–74, 110–74, 111–74.	02/28/90	05/16/90, 55 FR 20269.	
Operating Permit requiring VOC RACT for Calgon CO.	KDEPDAQ Permit 0–94–020	11/17/94	05/24/95, 60 FR 27411.	
Reynolds Metals Company	APCDJC Permits 103–74, 104–74, 016–74, 110–74, 111–74.	04/16/97	01/13/98, 63 FR 1929.	
Alternative Averaging Period for American Greetings Corporation.	KDEPDAQ Permit V–98–049	07/07/99	05/09/01, 66 FR 23617.	
Title V permit requiring VOC RACT for Publisher's Printing, Inc., Bullitt County.	KDEPDAQ Permit 21–029–00019.	07/20/01	10/23/01, 66 FR 53664.	
Board Order American Synthetic Rubber Company.	NO_X RACT Plan 12/20/00	01/01/01	10/23/01, 66 FR 53684.	
Board Order E.I. du Pont de Nemours & Company.	NO_X RACT Plan 02/21/01	03/01/01	10/23/01, 66 FR 53684.	
Board Order Ford Louisville Assembly Plant	NO_X RACT Plan 11/08/99	01/01/00	10/23/01, 66 FR 53684.	
Board Order General Electric Company	NO_X RACT Plan 01/17/01	03/01/01	10/23/01, 66 FR 53684.	
Board Order Kosmos Cement Company	NO_X RACT Plan 11/15/00	01/01/01	10/23/01, 66 FR 53684.	
Board Order Louisville Gas and Electric Company, Cane Run Generating Station.	NO_X RACT Plan 10/18/00	01/01/01	10/23/01, 66 FR 53684.	
Board Order Louisville Gas and Electric Company, Mill Creek Generating Station.	NO_X RACT Plan 10/18/00	01/01/01	10/23/01, 66 FR 53684.	

EPA-APPROVED KENTUCKY SOURCE-SPECIFIC REQUIREMENTS—Continued

Name of source	Permit No.	State effective date	EPA approval date	Explanations
Board Order Louisville Medical Center Steam Plant.	NO_X RACT Plan 02/21/01	04/01/01	10/23/01, 66 FR 53685.	
Board Order Oxy Vinyls, LP	NO_X RACT Plan 12/20/00	01/01/01	10/23/01, 66 FR 53685.	
Board Order Rohm and Haas Company	NO_X RACT Plan 12/20/00	01/01/01	10/23/01, 66 FR 53685.	
Board Order Texas Gas Transmission	NO_X RACT Plan 11/08/99	01/01/00	10/23/01, 66 FR 53685.	
Lawson Mardon Packaging, USA, Inc.	N/A	08/11/03	07/10/03, 68 FR 41084.	

(e) EPA-approved non-regulatory provisions.

EPA—APPROVED KENTUCKY NON-REGULATORY PROVISIONS

Name of non-regulatory SIP provision	Applicable geographic or nonattainment area	State submittal date/effective date	EPA approval date	Explanations
Air Quality surveillance plan	Commonwealth of Kentucky.	11/15/79	11/16/81, 46 FR 56198.	
Protection Visibility in Class I Areas.	Mammoth Cave National Park (Class I area).	08/31/97	07/12/88, 53 FR 26253.	
Small Business Assistance Program.	Commonwealth of Kentucky.	07/15/93	06/19/95, 60 FR 31915.	
Lexington Maintenance Plan	Fayette County, Scott County.	01/15/93	09/11/95, 60 FR 47094.	
Ashland-Huntington Maintenance Plan.	Boyd County, Greenup County.	05/24/95	06/29/95, 60 FR 33752.	
Maintenance Plan for Owensboro & Edmonson County Area.	Daviess County, Hancock County, Edmonson County.	04/14/98	09/03/98, 63 FR 46898.	
Northern Kentucky 15% Plan & I/M.	Boone, Campbell and Kenton Counties.	09/11/98	12/08/98, 63 FR 67591.	
Negative Declarations for the nonattainment portions of Bullitt and Oldham Counties in Louisville 1-hour moderate ozone nonattainment area for CTG rules for aerospace, SOCMI, shipbuilding, and wood furniture manufacturing.	Jefferson County, Bullitt County, Oldham County.	12/14/99	10/23/01, 66 FR 53665.	
Negative Declarations submitted by the Air Pollution Control District of Jefferson County for the Louisville 1-hour moderate ozone nonattainment area for CTG rules for aerospace, shipbuilding, and wood furniture manufacturing.	Jefferson County, Bullitt County, Oldham County.	02/26/01	10/23/01, 66 FR 53665.	
Louisville Ozone Maintenance Plan.	Jefferson County and portions of Bullitt and Oldham Counties.	07/09/01	10/23/01, 66 FR and 53685.	
Maintenance Plan for Paducah Area.	Marshall County and a portion of Livingston County.	06/14/01	08/20/01, 66 FR 43488.	

EPA—APPROVED KENTUCKY NON-REGULATORY PROVISIONS—Continued

Name of non-regulatory SIP provision	Applicable geographic or nonattainment area	State submittal date/effective date	EPA approval date	Explanations
Northern Kentucky Maintenance Plan revisions.	Boone, Campbell and Kenton Counties.	05/02/03	05/30/03, 68 FR 32384.	

[64 FR 28750, May 27, 1999, as amended at 65 FR 12950, Mar. 10, 2000; 65 FR 37898, June 19, 2000; 66 FR 23617, May 9, 2001; 66 FR 43491, Aug. 20, 2001; 66 FR 53659, 53664, 53684, 53689, Oct. 23, 2001; 67 FR 5953, Feb. 8, 2002; 67 FR 17630, Apr. 11, 2002; 67 FR 59786, Sept. 24, 2002; 67 FR 69690, Nov. 19, 2002; 68 FR 32384, May 30, 2003; 68 FR 37419, June 24, 2003; 69 FR 1678, Jan. 12, 2004; 69 FR 18816, Apr. 9, 2004]

§ 52.921 Classification of regions.

The Kentucky plan was evaluated on the basis of the following classifications:

Air quality control region	Pollutant				
	Particulate matter	Sulfur oxides	Nitrogen dioxide	Carbon monoxide	Photochemical oxidants (hydrocarbons)
Appalachian Intrastate	II	III	III	III	III
Bluegrass Intrastate	II	III	III	III	III
Evansville (Indiana)-Owensboro-Henderson (Kentucky) Interstate	I	II	III	III	III
Huntington (West Virginia)-Ashland (Kentucky)-Portsmouth-Ironton (Ohio) Interstate	I	III	III	III	III
Louisville Interstate	I	I	III	III	I
Metropolitan Cincinnati Interstate	I	II	III	III	I
North Central Kentucky Intrastate	II	III	III	III	III
Paducah (Kentucky)-Cairo (Illinois) Interstate	I	II	III	III	III
South Central Kentucky Intrastate	III	III	III	III	III

[37 FR 10868, May 31, 1972, as amended at 39 FR 16346, May 8, 1974]

§ 52.922 [Reserved]

§ 52.923 Approval status.

(a) With the exceptions set forth in this subpart, the Administrator approves Kentucky's plans for the attainment and maintenance of the national standards under section 110 of the Clean Air Act. Furthermore, the Administrator finds the plans satisfy all requirements of Part D, Title I, of the Clean Air Act as amended in 1977, except as noted below. In addition, continued satisfaction of the requirements of Part D for the ozone portion of the SIP depends on the adoption and submittal of RACT requirements by July 1, 1980 for the sources covered by CTGs issued between January 1978 and January 1979 and adoption and submittal by each subsequent January of additional RACT requirements for sources covered by CTGs issued by the previous January.

(b) New Source review permits issued pursuant to Section 173 of the Clean Air Act will not be deemed valid by EPA unless the provisions of Section V of Appendix S of 40 CFR part 51 are met.

[45 FR 72157, Oct. 31, 1980]

§ 52.924 Legal authority.

(a) The requirements of § 51.230(f) of this chapter are not met since K.R.S. 224.380 of the Air Pollution Control Law of the Commonwealth of Kentucky (June 18, 1970) does not provide for the release, under certain circumstances, of emission data to the public.

(b) Delegation of Authority: Pursuant to section 114 of the Act, Kentucky requested a delegation of authority to enable it to collect, correlate, and release emission data to the public. The Administrator has determined that Kentucky is qualified to receive a delegation of the authority it requested. Accordingly, the Administrator delegates to Kentucky his authority under section 114(a) (1) and (2) and section 114(c) of the Act, i.e., authority to collect, correlate, and release emission data to the public.

[37 FR 10868, May 31, 1972, as amended at 37 FR 15084, July 27, 1972; 51 FR 40676, Nov. 7, 1986]

§ 52.925 General requirements.

(a) The requirements of § 51.116(c) of this chapter are not met since the legal authority to provide for public availability of emission data is inadequate.

[39 FR 34536, Sept. 26, 1974, as amended at 51 FR 40676, Nov. 7, 1986]

§ 52.926 Attainment dates for national standards.

The following table presents the latest dates by which the national standards are to be attained. The dates reflect the information presented in Kentucky's plan, except where noted.

Air quality control region	Pollutant						
	Particulate matter		Sulfur oxides		Nitrogen dioxide	Carbon monoxide	Ozone
	Primary	Secondary	Primary	Secondary			
Appalachian Intrastate:							
a. Bell County	g	h	b	b	b	b	b
b. Perry County	g	h	b	b	b	b	b
c. Whitley County	g	h	b	b	b	b	b
d. Rest of AQCR	c	*c*	b	b	b	b	b
Bluegrass Intrastate:							
a. Fayette County	a	*c*	b	b	b	b	*g*
b. Madison County	g	h	b	b	b	b	b
c. Rest of AQCR	a	*c*	b	b	b	b	b
Evansville (Indiana)-Ownsboro-Henderson (Kentucky) Interstate:							
a. Daviess County	g	i	g	g	b	b	b
b. Henderson County	g	i	a	e	b	b	*g*
c. Webster County	c	*c*	g	g	b	b	b
d. Rest of AQCR	c	*c*	a	e	b	b	b
Huntington (West Virginia)-Ashland (Kentucky)-Portsmouth-Ironton (Ohio) Interstate:							
a. Boyd County	g	i	g	b	b	b	*g*
b. Lawrence County	g	h	b	b	b	b	b
c. Rest of AQCR	c	*c*	b	b	b	b	b
Louisville Interstate	g	i	j	j	b	h	h
Metropolitan Cincinnati Interstate:							
a. Boone County	c	*c*	a	d	b	*d*	h
b. Campbell County	g	h	a	d	b	*d*	h
c. Kenton County	c	*c*	a	d	b	*d*	h
d. Rest of AQCR	c	*c*	a	*d*	b	*d*	c
North Central Kentucky Intrastate:							
a. Bullitt County	g	h	b	b	b	b	b
b. Rest of AQCR	a	*c*	b	b	b	b	b
Paducah (Kentucky) Cairo (Illinois) Interstate:							
a. McCracken County	g	h	g	f	b	b	b
b. Marshall County	c	g	a	f	b	b	b
c. Muhlenberg County	g	h	g	g	b	b	b
d. Rest of AQCR	c	*c*	a	f	b	b	b
South Central Kentucky Intrastate	b	b	b	b	b	b	b

See § 81.318 of this chapter to identify the specific nonattainment area.

NOTE: Dates or footnotes in italics are prescribed by the Administrator because the plan did not provide a specific date or the dates provided were not acceptable. Sources subject to plan requirements and attainment dates established under section 110(a)(2)(A) prior to the 1977 Clean Air Act Amendments remain obligated to comply with those requirements by the earlier deadlines. The earlier attainment dates are set out at 40 CFR 52.926 (1979 edition).

a. Air quality levels presently below primary standards or area is unclassifiable.
b. Air quality levels presently below secondary standards or area is unclassifiable.
c. April 1975.
d. July 1975.
e. July 1977.

f. July 1978.
g. December 31, 1982.
h. December 31, 1987.
i. 18 month extension for plan submittal granted: attainment date not yet established.
j. January 1, 1985.

[45 FR 85002, Dec. 24, 1980]

§ 52.927 Compliance schedules.

(a) The requirements of § 51.262(a) of this chapter are not met since compliance schedules with adequate increments of progress have not been submitted for every source for which they are required.

(b) Federal compliance schedules.

(1) Except as provided in paragraph (b)(5) of this section, the owner or operator of any fuel-burning facility subject to the requirements of the Kentucky Air Pollution Control Regulations as they apply to sulfur dioxide sources, shall notify the Regional Administrator, by no later than November 3, 1975, of his intent to utilize either low-sulfur fuel or stack gas desulfurization to meet these requirements.

(2) Any owner or operator of a stationary source subject to paragraph (b)(1) of this section who elects to utilize low-sulfur fuel shall be subject to the following compliance schedule:

(i) December 1, 1975—Submit to the Regional Administrator a projection of the amount of fuel, by types, that will be substantially adequate to enable compliance with the applicable regulation on July 1, 1977, and for at least one year thereafter, as well as a statement as to whether boiler modifications will be required. If so, final plans for such modifications must be submitted simultaneously.

(ii) December 31, 1975—Sign contracts with fuel suppliers for projected fuel requirements as projected above.

(iii) December 31, 1975—Let contracts for necessary boiler modifications, if applicable.

(iv) January 30, 1976—Initiate onsite modifications, if applicable.

(v) May 1, 1977—Complete onsite modifications, if applicable.

(vi) July 1, 1977—Achieve compliance with the applicable regulations, and certify such compliance to the Regional Administrator.

(3) Any owner or operator subject to paragraph (b)(1) of this section who elects to utilize stack gas desulfurization shall be subject to the following compliance schedule:

(i) December 1, 1975—Submit to the Regional Administrator a final control plan, which describes at a minimum the steps which will be taken by the source to achieve compliance with the applicable regulations.

(ii) December 31, 1975—Negotiate and sign all necessary contracts for emission control systems or process modifications, or issue orders for the purchase of component parts to accomplish emission control or process modifications.

(iii) January 30, 1976—Initiate onsite construction or installation of emission control equipment or process modification.

(iv) May 1, 1977—Complete onsite construction or installation or emission control equipment or process modification.

(v) July 1, 1977—Complete shakedown operations and performance tests for the applicable unit(s); achieve compliance with Kentucky Division of Air Pollution Regulation for sulfur dioxide sources and certify such compliance to the Regional Administrator. Ten days prior to any performance testing, notice must be given to the Regional Administrator to afford him the opportunity to have an observer present.

(4) Five days after the deadline for completing increments in paragraphs (b)(2)(ii) through (b)(2)(v) and (b)(3)(ii) through (b)(3)(iv) of this section, certify to the Regional Administrator whether the increment has been met.

(5) (i) None of the above paragraphs shall apply to a source which is presently in compliance with applicable regulations. The owner or operator of any fuel-burning facility with an aggregate heat input of more than 250 million BTU per hour which is presently in compliance, shall certify such compliance to the Regional Administrator by November 3, 1975. The Regional Administrator may request

whatever supporting information he considers necessary for proper certification.

(ii) Any compliance schedule adopted by the State and approved by the Administrator shall satisfy the requirements of this paragraph for the affected source.

(iii) Any owner or operator subject to a compliance schedule in this paragraph may submit to the Regional Administrator no later than December 1, 1975, a proposed alternative compliance schedule. No such compliance schedule may provide for final compliance after the final compliance date in the applicable compliance schedule of this paragraph. If approved by the Administrator, such schedule shall satisfy the requirements of this paragraph for the affected source.

(6) Nothing in this paragraph shall preclude the Administrator from promulgating a separate schedule for any source to which the application of a compliance schedule in this paragraph fails to satisfy the requirements of §§ 51.261 and 51.262(a) of this chapter.

[38 FR 16145, June 20, 1973, as amended at 40 FR 3418, Jan. 22, 1975; 40 FR 14071, Mar. 28, 1975; 40 FR 29541, July 14, 1975; 40 FR 40160, Sept. 2, 1975; 51 FR 40675, 40676, 40677, Nov. 7, 1986; 54 FR 25258, June 14, 1989]

§ 52.928 Control strategy: Sulfur oxides.

The revised SO_2 emission limit for large coal-fired boilers in Bell, Clark, and Woodford Counties, submitted on June 29, 1979, is disapproved since it does not provide for attainment and maintenance of all SO_2 NAAQS. The limit approved by EPA on May 10, 1976 (41 FR 19105), remains the limit applicable to these sources.

[49 FR 11091, Mar. 23, 1984]

§ 52.929 [Reserved]

§ 52.930 Control strategy: Ozone.

(a) The VOC bubble for Alcan Foil Products in Louisville submitted as a SIP revision on March 3, 1986, is disapproved. The source must continue to meet all the requirements of Jefferson County Regulation 6.29.

(b) *Part D—disapproval*—(1) Campbell and Kenton Counties nonattainment area. The 1979 SIP revisions for these two counties are disapproved because the Commonwealth failed to submit evidence of legal authority to implement a vehicle inspection and maintenance program as required under section 172(b)(11)(B) of the Clean Air Act. No major new or modified sources of volatile organic compounds can be built in these two counties by virtue of the provisions of section 110(a)(2)(l) of the Clean Air Act.

(2) Northern Kentucky (Boone, Campbell and Kenton Counties) ozone nonattainment area. The demonstration of attainment of the ozone standards by the end of 1982, submitted as part of Kentucky's ozone SIP revision on June 23, 1982, (draft), September 27, 1982, and November 3, 1982, is disapproved. As a result, the extension of the attainment deadline until December 31, 1987, remains in effect, along with the related requirement to submit a SIP revision addressing all requirements of Part D extension areas.

(c) The redesignation request submitted by the Commonwealth of Kentucky, on November 11, 1994, for the Kentucky portion of the Cincinnati-Northern Kentucky moderate interstate ozone nonattainment area from nonattainment to attainment was disapproved on September 27, 1996.

(d) Kentucky's November 15, 1996, request for a 1-year attainment date extension for the Kentucky portion of the Cincinnati-Hamilton metropolitan moderate ozone nonattainment area which consists of Kenton, Boone, and Campbell Counties is approved. The date for attaining the ozone standard in these counties is November 15, 1997.

(e) Kentucky's November 15, 1996, request for a 1-year attainment date extension for the Kentucky portion of the Louisville moderate ozone nonattainment area which consists of Jefferson County and parts of Bullitt and Oldham Counties is approved. The date for attaining the ozone standard in these counties is November 15, 1997.

(f) Kentucky's January 7, 1998, request for a 1-year attainment date extension for the Kentucky portion of the Cincinnati-Hamilton metropolitan moderate ozone nonattainment area which consists of Kenton, Boone, and Campbell Counties is approved. The

date for attaining the ozone standard in these counties is November 15, 1998.

(g) The redesignation request submitted by the Commonwealth of Kentucky, on October 29, 1999, for the Kentucky portion of the Cincinnati-Hamilton moderate interstate ozone nonattainment area from nonattainment to attainment was approved on July 5, 2000. The mobile source budgets for the Kentucky portion of the area for the purposes of transportation conformity are now 5.83 tons per summer day of volatile organic compounds and 15.13 tons per summer day of nitrogen oxides for the year 2010.

(h) Determination—EPA is determining that as of July 5, 2000, the Kentucky portion of the Cincinnati-Hamilton ozone nonattainment area (which includes the Counties of Boone, Kenton, and Campbell) has attained the 1-hour ozone standard and that the attainment demonstration requirements of section 182(b)(1), 182(j), and 172(c)(1), along with the section 172(c)(9) contingency measure requirements, do not apply to the area.

(i) Approval—EPA is approving an exemption from the requirements contained in section 182(f) of the Clean Air Act. This approval exempts Boone, Kenton, and Campbell counties in Kentucky from the NO_X related general conformity provisions; nonattainment NSR for new sources and modifications that are major for NO_X; NO_X RACT; and the requirement for a demonstration of compliance with the enhanced I/M performance standard for NO_X.

(j) [Reservd]

(k) The redesignation request submitted by the Commonwealth of Kentucky, on March 30, 2001, and supplemented on July 9, 2001, for the Kentucky portion of the Louisville moderate interstate ozone nonattainment area from nonattainment to attainment was approved on October 23, 2001. The motor vehicle emissions budgets for VOC and NO_X in the Kentucky portion of the Louisville moderate interstate maintenance plan are adequate for conformity purposes and approvable as part of the maintenance plan. The 1-hour ozone standard maintenance plan motor vehicle emission budgets for the entire interstate Louisville area for the purposes of transportation conformity are now 48.17 tons per summer day of VOC and 92.93 tons per summer day of NO_X for the year 2012.

[46 FR 58082, Nov. 30, 1981, as amended at 48 FR 13169, Mar. 30, 1983; 51 FR 10210, Mar. 25, 1986; 54 FR 10983, Mar. 16, 1989; 60 FR 32469, June 22, 1995; 60 FR 40101, Aug. 7, 1995; 61 FR 50720, Sept. 27, 1996; 62 FR 28637, May 27, 1997; 62 FR 40281, July 28, 1997; 62 FR 55176, Oct. 23, 1997; 62 FR 61246, Nov. 17, 1997; 63 FR 14625, Mar. 26, 1998; 65 FR 37898, June 19, 2000; 66 FR 53685, Oct. 23, 2001]

§52.931 Significant deterioration of air quality.

(a) Regulations for preventing significant deterioration of air quality. The provisions of §52.21 (b) through (w) are hereby incorporated and made a part of the applicable state plan for the State of Kentucky only as they apply to permits issued pursuant to §52.21 prior to final approval of Kentucky's Regulation for Prevention of Significant Deterioration (PSD), Visibility Monitoring, and Visibility New Source Review in Attainment Areas. The provisions of §52.21 (b) through (w) are rescinded for permits issued after final approval of Kentucky's Regulation for Prevention of Significant Deterioration (PSD), Visibility Monitoring, and Visibility New Source Review in Attainment Areas.

(b) The Commonwealth of Kentucky has committed to revising the state's regulations accordingly when EPA amends the federal vessel emissions provisions contained in 40 CFR 51.166. In a letter dated October 17, 1986, Kentucky stated:

> As requested, the Division of Air Pollution Control hereby commits to changing the definition of "building, structure, facility, or installation," and any other applicable definitions, when the issue of vessel emissions is resolved at the federal level, and after the federal regulation, 40 CFR 51.24, is amended.

(c) In a letter dated May 3, 1988, EPA informed Kentucky that the following caveat must be included in all potentially affected permits due to a decision of the U.S. Court of Appeals for the District of Columbia Circuit (*NRDC* v. *Thomas*, 838 F.2d 1224):

> In approving this permit, the Kentucky Division for Air Quality has determined that the application complies with the applicable provisions of the stack height regulations as

revised by the EPA on July 8, 1985 (50 FR 27892). Portions of the regulations have been remanded by a panel of the U.S. Court of Appeals for the D.C. Circuit in NRDC v. *Thomas*, 838 F.2d 1224 (D.C. Cir. 1988). Consequently, this permit may be subject to modification if and when the EPA revises the regulation in response to the court decision. This may result in revised emission limitations or may affect other actions taken by the source owners or operators.

Kentucky responded with a letter dated May 11, 1988, stating in part:

This is in response to your letter dated May 3, 1988 * * *. As requested by your letter, the Kentucky Division for Air Quality agrees to include the condition set forth in your letter, in all potentially affected permits issued under regulation 401 KAR 51:017 or 401 KAR 51:052. Therefore, we request that you consider this letter as our commitment that the required caveat will be included in all potentially affected permits * * *.

[54 FR 36311, Sept. 1, 1989]

§ 52.932 Rules and regulations.

(a) The last sentence of section 3(1) of Kentucky regulation 401 KAR 3:050, which specifies that a new fossil fuel fired steam electric generator's allowable SO_2 emissions may be calculated by averaging SO_2 emissions from existing units of this type and from new ones, is disapproved since it contravenes subpart D of 40 CFR part 60, New Source Performance Standards.

(b) Section 8(2)(a) of regulation 401 KAR 61:015 is disapproved in that it allows the Tennessee Valley Authority's Shawnee power plant until October 1, 1981, to achieve compliance with emissions limits which are not made more stringent by the 1979 Part D revisions, and which the source was previously required to meet by July 1, 1977.

(c) Section 8(2)(d) of regulation 401 KAR 61:015 is disapproved in that it allows sources until December 31, 1982, to achieve compliance with emission limits which are not made more stringent by the 1979 Part D revisions, and which the sources were previously required to meet prior to 1979.

[41 FR 19106, May 10, 1976, as amended at 46 FR 40188, Aug. 7, 1981]

§ 52.933 Control Strategy: Sulfur oxides and particulate matter.

In a letter dated March 27, 1987, the Kentucky Department for Natural Resources and Environmental Protection certified that no emission limits in the State's plan are based on dispersion techniques not permitted by EPA's stack height rules. This certification does not apply to: Big Rivers-Green #1 & 2, Kentucky Utilities-Ghent #3 & 4, and Ashland Oil, Inc.-Catlettsburg.

[54 FR 23478, June 1, 1989]

§ 52.934 VOC rule deficiency correction.

(a) Sections 1.02, 1.08, 6.12, 6.13, 6.16, 6.18, 6.19, 6.23, 6.29, 6.30, 6.31, 6.32, 6.33, 6.34, 6.35, 7.11, 7.12, 7.16, 7.18, 7.19, 7.23, 7.52, 7.56, 7.57, 7.58, 7.59, 7.60 and 7.61 of the Jefferson County portion of the Commonwealth of Kentucky SIP are being approved. The Commonwealth submitted these regulations to EPA for approval on February 12, 1992. These sections were intended to correct deficiencies cited in a letter calling for the Commonwealth to revise its SIP for ozone from Greer C. Tidwell, the EPA Regional Administrator, to Governor Wallace G. Wilkinson on May 26, 1988, and clarified in a letter from Winston A. Smith, Air, Pesticides & Toxics Management Division Director, to William C. Eddins, Director of the Commonwealth of Kentucky Division for Air Quality.

(b) Sections 1.05, 1.06, 6.17, 6.36, 6.37, and 6.40 of the Jefferson County portion of the Commonwealth of Kentucky SIP are being approved. The Commonwealth submitted these regulations to EPA for approval on March 4, 1993. These sections were intended to correct deficiencies cited in a letter calling for the Commonwealth to revise its SIP for ozone from Greer C. Tidwell, the EPA Regional Administrator, to Governor Wallace G. Wilkinson on May 26, 1988, and clarified in a letter from Winston A. Smith, Air, Pesticides & Toxics Management Division Director, to William C. Eddins, Director of the Commonwealth of Kentucky Division for Air Quality.

(c) Deficiencies in 1.12 Emissions Trading, however, have not been corrected. The above deficiencies must be corrected according to the letters mentioned above, the proposed post-1987 ozone policy (52 FR 45044), and other

EPA guideline relating to the deficiencies before the SIP for ozone can be fully approved.

[59 FR 32352, June 23, 1994]

§ 52.935 PM_{10} State implementation plan development in group II areas.

On July 7, 1988, the State submitted a committal SIP for the cities of Ashland and Catlettsburg in Boyd County. The committal SIP contains all the requirements identified in the July 1, 1987, promulgation of the SIP requirements for PM_{10} at 52 FR 24681. The SIP commits the State to submit an emissions inventory, continue to monitor for PM_{10}, report data and to submit a full SIP if a violation of the PM_{10} National Ambient Air Quality Standards is detected.

[55 FR 4172, Feb. 7, 1990]

§ 52.936 Visibility protection.

(a) The requirements of Section 169A of the Clean Air Act are not met because the plan does not include approvable procedures meeting the requirements of 40 CFR 51.307 (b) and (c) for protection of visibility in mandatory Class I Federal areas from sources in nonattainment areas.

(b) Regulations for visibility monitoring and new source review. The provisions of § 52.28 are hereby incorporated and made part of the applicable plan for the State of Kentucky.

[54 FR 36311, Sept. 1, 1989]

§ 52.937 Review of new sources and modifications.

(a) Approval—EPA is approving the section 182(f) oxides of nitrogen (NO_X) reasonably available control technology (RACT) exemption request submitted by the Kentucky Department for Environmental Protection on August 16, 1994, for the Kentucky portion of the Huntington-Ashland ozone (O_3) moderate nonattainment area. This approval exempts this area from implementing NO_X RACT on major sources of NO_X. If a violation of the O_3 NAAQS occurs in the area, the exemption from the requirement of section 182(f) of the CAA in the applicable area shall not apply.

(b) Approval—EPA is approving the section 182(f) oxides of nitrogen (NO_X) reasonably available control technology (RACT) exemption for the Kentucky portion of the Cincinnati-Hamilton ozone (O_3) moderate nonattainment area. This approval exempts this area from implementing NO_X RACT on major sources of NO_X.

[60 FR 21717, May 3, 1995, as amended at 65 FR 37898, June 19, 2000]

§ 52.938 General conformity.

The General Conformity regulations were submitted on November 10, 1995, and adopted into the Kentucky State Implementation Plan (SIP). The Commonwealth of Kentucky incorporated by reference regulations 40 CFR part 51, subpart W—determining conformity of General Federal Actions to State or Federal Implementation Plans.

[63 FR 40046, July 27, 1998]

§ 52.939 Original identification of plan section.

(a) This section identifies the original "Air Implementation Plan for the Commonwealth Kentucky" and all revisions submitted by Kentucky that were federally approved prior to March 1, 1999.

(b) The plan was officially submitted on February 8, 1972, and was resubmitted on December 5, 1973.

(c) The plan revisions listed below were submitted on the dates specified.

(1) Clarifying comments on the plan submitted on March 6, 1972, by the Kentucky Air Pollution Control Office.

(2) Chapters IV and V, Control Strategies, and Chapter VII, Emission Control Regulations, submitted on March 17, 1972, by the Kentucky Air Pollution Control Office.

(3) Summary letter of Kentucky Air Pollution Control Commission and Regional Office meeting with attachments submitted May 3, 1972, by the Kentucky Air Pollution Control Office.

(4) Letter requesting delegation of authority and offering justification for a two-year extension for attainment of the sulfur dioxide primary standard submitted on June 7, 1972, by the Governor.

(5) Indirect source Regulation AP–11 and compliance schedules submitted on December 5, 1973, by the Governor.

(6) Compliance schedules submitted on February 15, 1974, by the Kentucky Department for Natural Resources and Environmental Protection.

(7) Compliance schedules submitted on April 23, 1974, by the Kentucky Department for Natural Resources and Environmental Protection.

(8) Clarifying comments submitted on May 21, 1974, by the Kentucky Department for Natural Resources and Environmental Protection.

(9) AQMA material submitted on January 6, 1975, by the Kentucky Department for Natural Resources and Environmental Protection.

(10) Revised body of air pollution control regulations and revised control strategies submitted respectively on August 29 and September 16, 1975, by the Kentucky Department for Natural Resources and Environmental Protection.

(11) Letters requesting delegation of Federal authority for the administrative and technical portions of the Prevention of Significant Deterioration program were submitted on May 5 and June 13, 1976 by the Secretary of the Department for Natural Resources and Environmental protection.

(12) 1979 revisions for Part D requirements for ozone nonattainment areas, submitted on June 29, 1979, by the Kentucky Department for Natural Resources and Environmental Protection.

(13) 1979 revisions for Part D requirements for sulfur dioxide nonattainment areas (Boyd, Jefferson, McCracken, Muhlenberg, and Webster Counties), submitted on June 29, 1979, by the Kentucky Department for Natural Resources and Environmental Protection.

(14) 1979 revisions for Part D requirements for total suspended particulate nonattainment areas (Bell, Boyd, Jefferson, McCracken and Muhlenberg counties, that portion of Bullit County in Shepherdsville, that portion of Campbell County in Newport, that portion of Daviess County in Owensboro, those portions of Henderson County in and around Henderson, that portion of Lawrence County in Louisa, that portion of Madison County in Richmond, that portion of Perry County in Hazard, that portion of Pike County in Pikeville, and that portion of Whitley County in Corbin) submitted on June 29, 1979, by the Kentucky Department for Natural Resources and Environmental Protection.

(15) Revision to the State Implementation Plan for a bubble action at the Kentucky Utilities—Green River Station was submitted on December 1, 1980.

(16) Corrections in 1979 ozone revisions required by conditional approval of January 25, 1980, submitted on May 18, 1980 (letter on oil-water effluent separators), September 22, 1980 (Jefferson County I/M ordinance and schedule), November 19, 1980 (Jefferson County transportation related commitments), and on January 8, 1981 (changes in Jefferson County I/M schedule), by the Kentucky Department for Natural Resources and Environmental Protection.

(17) 1979 Revisions for Part D requirements for the Jefferson County carbon monoxide nonattainment area, submitted on June 29, 1979, by the Kentucky Department for Natural Resources and Environmental Protection. Additional materials to correct the deficiencies noted in the November 15, 1979 proposed conditional approval were submitted as SIP revisions on September 22, 1980, November 19, 1980, and January 8, 1981, as noted in the preceding paragraph.

(18) Air quality surveillance plan submitted on November 15, 1979, by the Kentucky Department for Natural Resources and Environmental Protection.

(19) Revision to the State Implementation Plan for a bubble action at Corning Glassworks, Danville, Kentucky was submitted on May 18, 1981, by the Kentucky Department for Natural Resources and Environmental Protection.

(20) Revision to the State Implementation Plan for a bubble action at National Distillers Company's Old Crow Plant in Woodford County, submitted on December 24, 1980, by the Kentucky Department for Natural Resources and Environmental Protection.

(21) Boone County Inspection/Maintenance ordinance and transportation control measures for Boone, Campbell, and Kenton Counties, submitted on November 19, 1980, by the Kentucky Department for Natural Resources and Environmental Protection.

(22) Set II VOC regulations, submitted on February 5, 1981, and September 24, 1982, by the Kentucky Department for Environmental Protection.

(23) Implementation plan for lead, submitted on May 7, 1980, by the Kentucky Department for Natural Resources and Environmental Protection.

(24) Provision for permit and exemption fees, submitted on June 10, 1981, by the Kentucky Department for Natural Resources and Environmental Protection.

(25) Provisions for public notifications and participation pursuant to section 127(a) of the Clean Air Act, submitted on April 8, 1980, by the Kentucky Department for Natural Resources and Environmental Protection.

(26) Revision to the State Implementation Plan for a bubble action at General Electric, Louisville, Kentucky, submitted on August 7, 1981, by the Kentucky Department for Natural Resources and Environmental Protection.

(27) Revised Boone County Inspection/Maintenance schedule submitted on October 9, 1981 by the Kentucky Department for Natural Resources and Environmental Protection.

(28) Addition to Appendix N of Jefferson County Regulation 6.28, Standard of Performance for Existing Hot Air Aluminium Atomization Processes, submitted on May 18, 1981, by the Kentucky Department for Natural Resources and Environmental Protection.

(29) Revision of Appendix N, Jefferson County Regulation 6.35, Standard of Performance for Existing Fabric, Vinyl and Paper Surface Coating Operations, submitted on November 17, 1981, by the Kentucky Department for Natural Resources and Environmental Protection.

(30) Jefferson County Set II VOC regulations for new/existing affected facilities, submitted on October 20, 1981, by the Kentucky Department for Natural Resources and Environmental Protection.

(31) Miscellaneous non-Part D revisions, submitted on June 29, 1979, by the Kentucky Department for Natural Resources and Environmental Protection.

(32) Revision to the State Implementation Plan for a bubble action at Borden Chemical Co., Jefferson County, Kentucky, received by EPA from the Kentucky Department for Natural Resources and Environmental Protection on March 5, 1982.

(33) Addition of Kentucky Regulation 401 KAR 61:165, section 5, Particulate Standard for Existing Primary Aluminum Reduction Plants, submitted on March 4, 1982, by the Kentucky Department for Natural Resources and Environmental Protection.

(34) [Reserved]

(35) Corrections in 1979 Part D revisions for sulfur dioxide nonattainment area (Boyd County), submitted on September 24, 1982, by the Kentucky Natural Resources and Environmental Protection Cabinet.

(36) Variance for seven per- chloroethylene dry cleaners, submitted on August 4, 1982, by the Kentucky Department for Environmental Protection.

(37) Variances for two dry cleaners, submitted on January 27, 1983, by the Kentucky Department for Environmental Protection.

(38) Revised SO_2 limit for large coal-fired boilers in Pulaski County, submitted on June 29, 1979, by the Kentucky Department for Natural Resources and Environmental Protection.

(39)–(40) [Reserved]

(41) Revisions to Appendix N, submitted July 19, 1982 and March 21, 1983, by the Kentucky Department for Environmental Protection.

(42) Regulation 401 KAR 61:070, Existing Ferroally Production Facilities, for the Marshall County Part D TSP area, submitted on June 29, 1979, by the Kentucky Department for Environmental Protection.

(43) 1982 revisions to the Part D plan for the Jefferson County ozone and carbon monoxide nonattainment area, submitted by the Kentucky Natural Resources and Environmental Protection Cabinet on February 9, June 15, September 12, November 21, and December 9, 1983.

(44) Variances for two dry cleaners, Jiffy The Cleaners and Hiland Cleaners, submitted on April 25, 1984, by the Kentucky Natural Resources Environmental Protection Cabinet.

(45) Corrections in the Part D TSP SIP and other revisions submitted on December 9, 1982, and May 1, 1984, by

the Kentucky Department for Environmental Protection.

(i) Incorporation by reference.

(A) Revisions in regulations 401 KAR—

50:010, Definitions and Abbreviations;
50:055, General Compliance Requirements;
61:005, General Provisions;
61:015, Existing Indirect Heat Exchangers;
61:075, Steel Plants and Foundries Using Existing Electric Arc Furnaces;
61:080, Steel Plants Using Existing Basic Oxygen Process Furnaces;
61:140, Existing By-Product Coke Manufacturing Plants; and
61:170, Existing Blast Furnace Casthouses.

The changes in these regulations were effective September 22, 1982 (50:055), December 1, 1982 (50:010, 61:005, 61:015, 61:075, and 61:140), and April 1, 1984 (61:080 and 61:170). No action is taken on the definition of "volatile organic compounds"in 401 KAR 50:010.

(ii) Other material—none.

(46) Kentucky regulation 401 KAR 51:017, Prevention of significant deterioration of air quality, and Kentucky's State Implementation Plan Revision for the Protection of Visibility for the Commonwealth of Kentucky pursuant to 40 CFR part 51, subpart P, submitted on February 20, 1986, by the Kentucky Natural Resources and Environmental Protection Cabinet.

(i) Incorporation by reference. (A) Kentucky regulation 401 KAR 51:017, Prevention of significant deterioration of air quality, which became State-effective on February 4, 1986.

(ii) Other material. (A) Kentucky's State Implementation Revision for the Protection of Visibility for the Commonwealth of Kentucky, pursuant to 40 CFR part 51, subpart P, which became State-effective on February 4, 1986.

(47) Stack height regulations were submitted to EPA on July 15, 1986, by the Kentucky Natural Resources and Environmental Protection Cabinet.

(i) Incorporation by reference.

(A) Regulation 401 KAR 50:042, which became effective on June 10, 1986.

(ii) Other material—none.

(48) Revisions to the I/M portions of the carbon monoxide and ozone Part D plans for Jefferson County, submitted by the Kentucky Natural Resources and Environmental Protection Cabinet on February 18, 1986.

(i) Incorporation by reference.

(A) A revised Regulation 8, Vehicle Exhaust Testing Requirements of the rules of the Air Pollution Control District of Jefferson County which was adopted on September 18, 1985.

(ii) Other materials—none.

(49) A revision to the Kentucky SIP for Tennessee Valley Authority Paradise Steam Plant pursuant to the procedures specified in Kentucky regulation 401 KAR 61:015, section 3 was submitted on June 29, 1987, by the Kentucky Natural Resources and Environmental Protection Cabinet. The revised SO_2 limits are contained in Permit Number 0–87–012, issued on June 29, 1987.

(i) Incorporation by reference.

(A) Permit Number 0–87–012, issued by the Kentucky Natural Resources and Protection Cabinet on June 29, 1987.

(ii) Other material.

(A) Letter of June 27, 1987 from the Kentucky Natural Resources and Environmental Protection Cabinet.

(50) A revision in Kentucky regulation 401 KAR 61:140, Existing by-product coke manufacturing plants, submitted on September 19, 1986, by the Kentucky Natural Resources and Environmental Protection Cabinet.

(i) Incorporation by reference.

(A) A revision to Division of Air Pollution regulation 401 Kentucky Administrative Regulations (KAR) 61:140, Existing by-product coke manufacturing plants, which became effective on September 4, 1986.

(B) Letter of September 19, 1986 from the Commonwealth of Kentucky to EPA.

(51) Revisions to the I/M portions of the carbon monoxide and ozone Part D plans for Jefferson County, submitted by the Kentucky Natural Resources and Environmental Protection Cabinet on March 20, 1987.

(i) Incorporation by reference.

(A) A revised Regulation 8, Vehicle Exhaust Testing Requirements; of the rules of the Air Pollution Control District of Jefferson County which was adopted on December 17, 1986.

(B) March 2, 1987 letter to EPA from Jefferson County.

(ii) Additional materials—none.

(52) Kentucky Plan for the "Protection of Visibility in Class I Areas (PART II)" submitted to EPA on August 31, 1987, by the Kentucky Department for Environmental Protection (KDEP) to satisfy the Part 2 visibility requirements.

(i) Incorporation by reference.

(A) June 8, 1988, letter from the Kentucky Natural Resources and Environmental Protection Cabinet, October 9, 1987, clarification letter from the Kentucky Natural Resources and Environmental Protection Cabinet, and page 8 of the Kentucky plan for the protection of visibility in Class I areas (PART II) containing the periodic review requirements satisfying 40 CFR 51.306(c), adopted on August 31, 1987.

(ii) Additional material.

(A) Narrative entitled "The Kentucky Plan for the Protection of Visibility in Class I Areas (PART II)."

(53) Revisions to Kentucky regulation 401 KAR 50:015, Documents incorporated by reference, submitted by the Kentucky Natural Resources and Environmental Protection Cabinet on March 23, 1987.

(i) Incorporation by reference.

(A) Revisions to Kentucky regulation 401 KAR 50:015, Documents incorporated by reference which became State-effective on February 10, 1987.

(B) Letter of March 23, 1987, from the Kentucky Natural Resources and Environmental Protection Cabinet transmitting the foregoing revisions.

(ii) Additional material—none.

(54) An opacity variance for boiler Units 1 and 2 of Tennessee Valley Authority's (TVA's) Paradise Steam Plant, submitted on August 6, 1986, by the Kentucky Natural Resources and Environmental Protection Cabinet.

(i) Incorporation by reference.

(A) Permit No. 0–86–75, for the TVA Paradise Steam Plant, issued by the Kentucky Natural Resources and Environmental Protection Cabinet on July 24, 1986.

(B) Letter of August 6, 1986, from the Kentucky Natural Resources and Environmental Protection Cabinet.

(ii) Other material—none.

(55) Revisions to Jefferson County, Kentucky Regulation 2.08, Permit Fees and Renewal, submitted on March 20, 1987, by the Kentucky Natural Resources and Environmental Protection Cabinet.

(i) Incorporation by reference.

(A) Revisions to Jefferson County, Kentucky Regulation 2.08, Permit Fees and Renewal, which became State-effective on December 17, 1986.

(B) Letter of March 20, 1987, from the Kentucky Natural Resources and Environmental Protection Cabinet.

(ii) Other material—none.

(56) A revision to Kentucky Regulation 401 KAR 51:017, Prevention of Significant Deterioration of Air Quality, submitted on February 9, 1988, by the Kentucky Natural Resources and Environmental Protection Cabinet. The revision to section 12(1)(e) replaces the reference to Regulation 401 KAR 51:052 with a reference to 40 CFR part 51, Appendix S, section IV. This revision became State-effective on December 11, 1987.

(i) Incorporation by reference.

(A) Kentucky Regulation 401 KAR 51:017, Prevention of Significant Deterioration of Air Quality, section 12(1)(e), which became State-effective on December 11, 1987.

(ii) Other material.

(A) Letter of February 9, 1988, from the Kentucky Natural Resources and Environmental Protection Cabinet.

(57) Jefferson County Air Pollution Control District Regulation 6.38 was submitted to EPA on March 20, 1987 by the Kentucky Natural Resources and Environmental Protection Cabinet.

(i) Incorporation by reference.

(A) Jefferson County Air Pollution Control District Regulation 6.38, "Standards of performance for existing air oxidation processes in the synthetic organic chemical manufacturing industry", which became effective December 17, 1986.

(B) Letter of March 20, 1987, from the Kentucky Natural Resources and Environmental Protection Cabinet.

(ii) Other materials—none.

(58) Jefferson County Air Pollution Control District Regulation 6.39 was submitted to EPA on March 20, 1987, by the Kentucky Natural Resources and Environmental Protection Cabinet.

(i) Incorporation by reference.

(A) Jefferson County Air Pollution Control District Regulation 6.39,

"Standard of performance for equipment leaks of volatile organic compounds in existing synthetic organic chemical and polymer manufacturing plants", which became effective December 17, 1986.

(B) March 20, 1987, letter from the Kentucky Natural Resources and Environmental Protection Cabinet.

(ii) Other materials—none.

(59) Revision to Jefferson County Regulations 3.05, Methods of Measurement submitted on January 19, 1989, by the Kentucky Natural Resources and Environmental Protection Cabinet.

(i) Incorporation by reference.

(A) Revisions to the Jefferson County Regulations, 3.05. Methods of Measurement.

This revision became State-effective April 20, 1988.

(ii) Other material.

(A) Letter of January 19, 1989, from the Kentucky Natural Resources and Environmental Protection Cabinet.

(60) Corrections in Part D TSP SIP and other revisions submitted on September 19, 1986, by the Kentucky Department for Environmental Protection. The removal of these last two conditions renders the Kentucky's Part D SIP for TSP fully approved.

(i) Incorporation by reference.

(A) Revisions in Regulation 401 KAR—

50:015. Documents Incorporated by Reference.

Section 1. Code of Federal Regulations,
Section 3. American Society for Testing and Materials,
Section 8. Kentucky Division of Air Pollution,
Section 10. American Public Health Association, and
Section 11. Availability.

59:010. New process operations.

Section 1. Applicability,
Section 2. Definitions,
Section 3. Standard for Particulate Matter, and
Section 4. Test Methods and Procedures.

61:020. Existing process operations.

Section 1. Applicability
Section 2. Definitions;
Section 3. Standard for Particulate Matter, and
Section 4. Test Methods and Procedures.

These changes were effective September 4, 1986.

(B) Letter of September 19, 1986, from the Kentucky Natural Resources and Environmental Protection Cabinet to EPA.

(ii) Other material—none.

(61) Revisions in Regulations 5.01, 6.12, 6.19, 6.22, 6.29, 6.30, 6.31, 6.32, 6.33, 6.34, and 6.35 of the Jefferson County portion of Kentucky's SIP were submitted on January 19, 1989, by Kentucky's Natural Resources Division and Environmental Protection Cabinet.

(i) Incorporation by reference.

(A) Amendments to the Jefferson County Regulations 5.01, 6.12, 6.19, 6.22, 6.29, 6.30, 6.31, 6.32, 6.33, 6.34, and 6.35 adopted on April 20, 1988.

(B) Letter of January 19, 1989, from Kentucky's Natural Resources and Environmental Protection Cabinet.

(ii) Other materials-none.

(62) Revision to Kentucky Regulation 401 KAR 50:015, Documents incorporated by reference submitted on February 9, 1989, by the Kentucky Natural Resources and Environmental Protection Cabinet. Section 5(1)(a) was amended to incorporate by reference Supplement A to the Guideline on Air Quality Models (Revised), July 1987. Supplement A became effective February 5, 1988. Section 12(4) was amended to reflect the current phone number for the Florence Regional Office. The revisions to 50:015 became state effective October 26, 1988.

(i) Incorporation by Reference.

(A) Kentucky Regulation 401 KAR 50:015, Documents incorporated by reference, Section 12(4) was amended on October 26, 1988.

(B) Supplement A to the Guideline on Air Quality Models EPA–450/2–78–027R that became effective February 5, 1988.

(ii) Other material.

(A) Letter of February 9, 1989, from the Kentucky Natural Resources and Environmental Protection Cabinet.

(63) Revisions to Kentucky Regulations 401 KAR 50:010, Definitions and abbreviations and 401 KAR 51:017, Prevention of Significant Deterioration of Air Quality, submitted on December 29, 1986, by the Kentucky Natural Resources and Environmental Protection Cabinet.

(i) Incorporation by reference. (A) Revisions in Kentucky Regulations are as follows. 401 KAR 50:010, Definitions and abbreviations section 1(49), and 401 KAR 51:017 Prevention of Significant

Deterioration of Air Quality, Section 8(3). These revisions were state effective December 2, 1986.

(ii) Other material. (A) Letter of February 9, 1988, from the Kentucky Natural Resources and Environmental Protection Cabinet.

(64) Revisions to Jefferson County Regulation 4, Emergency Episode submitted on January 19, 1989 and July 12, 1989, by the Kentucky Natural Resources and Environmental Protection Cabinet.

(i) Incorporation by reference.

(A) Revisions to the following Jefferson County Regulation.

(*1*) Regulation 4, except Regulation 4.02, effective February 16, 1983.

(*2*) Regulation 4.02 Episode Criteria effective April 20, 1988.

(ii) Other material.

(A) Letters of January 19, 1989 and July 12, 1989, from the Kentucky Natural Resources and Environmental Protection Cabinet.

(65) Addition of Jefferson County Regulation 2.05, Prevention of Significant Deterioration of Air Quality, submitted on August 2, 1989, by the Kentucky Natural Resources and Environmental Protection Cabinet.

(i) Incorporation by reference.

(A) Jefferson County Regulation 2.05, Prevention of Significant Deterioration of Air Quality. This regulation became effective April 19, 1989.

(ii) Other material.

(A) August 2, 1989, letter from the Natural Resources and Environmental Protection Cabinet.

(66) On July 7, 1988, revisions to Kentucky's State Implementation Plan for PM_{10} were submitted by the Kentucky Natural Resources and Environmental Protection Cabinet. The submittal included a committal SIP. EPA is taking no action on 401 KAR 51:052, Review of new sources in or impacting upon nonattainment areas.

(i) Incorporation by reference.

(A) The following revisions to 401 KAR were effective April 14, 1988:

(*1*) 50:010. Definitions and abbreviations: Section 1. Definitions and section 2. Abbreviations.

(*2*) 50:015. Documents incorporated by reference: Sections 1, 3, and 11.

(*3*) 50:035. Permits.

(*4*) 51:010. Attainment status designations: Section 1(1) and Appendices A and B.

(*5*) 51:017. Prevention of significant deterioration of air quality: Section 8(4) (e) and (f), section 8(9), section 12(1) (f) and (g), and Appendices A, B, C, and D.

(*6*) 53:005. General provisions: Section 3(2).

(*7*) 53:010. Ambient air quality standards: Appendix A.

(*8*) 55:005. Significant harm criteria.

(*9*) 55:010. Episode criteria: Headings and Appendix A.

(*10*) 59:010. New process operations: Section 3(1) (b) and (c).

(*11*) 61:020. Existing process operations: Section 3(1)(b).

(*12*) 61:170. Existing blast furnace casthouses: Necessity and function paragraph and section 2(3).

(ii) Other material.

(A) Letter of December 7, 1987, from the Kentucky Natural Resources and Environmental Protection Cabinet.

(B) Letter of July 7, 1988, from the Kentucky Natural Resources and Environmental Protection Cabinet.

(C) Letter of January 23, 1989, from the Kentucky Natural Resources and Environmental Protection Cabinet.

(67) Operating permits for nine presses at the Alcan Foil Products facility located in Louisville were submitted to EPA on July 28, 1989 by the Commonwealth of Kentucky.

(i) Incorporation by reference. (A) Alcan Foil Products operating permit numbers 103–74, 104–74, 105–74, 106–74, 110–74, and 111–74 which became State-effective on February 28, 1990.

(ii) Other material.

(A) Letter of July 28, 1989, from the Commonwealth of Kentucky Natural Resources and Environmental Protection Cabinet.

(68) Revisions to the Commonwealth of Kentucky State Implementation Plan (SIP) concerning Jefferson County Volatile Organic Compounds were submitted on February 12, 1992 by the Kentucky Natural Resources and Environmental Protection Cabinet.

(i) Incorporation by reference.

(A) Revisions to the following Jefferson County Regulations were effective May 15, 1991.

(*1*) Regulation 1.02 Definitions: (45), (61), (62), and (91).

(*2*) Regulation 1.08 Administrative Procedures: Subsections 1.1.1, 1.1.3, 2.2.7, 2.3, and 2.5, Section 3.0 closing paragraph, and Subsections 4.6, 8.1 and 8.4.

(*3*) Regulation 6.12 Standard of Performance for Existing Asphalt Paving Operations: Sections 1.0 and 5.0.

(*4*) Regulation 6.13 Standard of Performance for Existing Storage Vessels for Volatile Organic Compounds.

(*5*) Regulation 6.16 Standard of Performance for Existing Large Appliance Surface Coating Operations.

(*6*) Regulation 6.18 Standards of Performance for Existing Solvent Metal Cleaning Equipment.

(*7*) Regulation 6.19 Standard of Performance for Existing Metal Furniture Surface Coating Operations.

(*8*) Regulation 6.23 Standard of Performance for Existing Dry Cleaning Facilities: Section 1.0 and Subsection 4.3.

(*9*) Regulation 6.29 Standard of Performance for Existing Graphic Arts Facilities Using Rotogravure and Flexography.

(*10*) Regulation 6.30 Standard of Performance for Existing Factory Surface Coating Operations of Flat Wood Paneling.

(*11*) Regulation 6.31 Standard of Performance for Existing Miscellaneous Metal Parts and Products Surface Coating Operations.

(*12*) Regulation 6.32 Standard of Performance for Leaks from Existing Petroleum Refinery Equipment.

(*13*) Regulation 6.33 Standard of Performance for Existing Synthesized Pharmaceutical Product Manufacturing Operations.

(*14*) Regulation 6.34 Standard of Performance for Existing Pneumatic Rubber Tire Manufacturing Plants.

(*15*) Regulation 6.35 Standard of Performance for Existing Fabric, Vinyl and Paper Surface Coating Operations.

(*16*) Regulation 7.11 Standard of Performance for New Asphalt Paving Operations: Sections 1.0, 6.0, and 7.0.

(*17*) Regulation 7.12 Standard of Performance for New Storage Vessels for Volatile Organic Compounds: Section 1.0, Subsections 2.10, 5.3.2, 5.3.3, and 5.4, and Section 8.0.

(*18*) Regulation 7.16 Standard of Performance for New Large Appliance Surface Coating Operations: Section 1.0, Subsections 2.3, 4.2, 4.4, 5.3 and 5.4, and Sections 6.0 and 7.0.

(*19*) Regulation 7.18 Standards of Performance for New Solvent Metal Cleaning Equipment: Section 1.0 and Subsection 2.4.

(*20*) Regulation 7.19 Standard of Performance for New Metal Furniture Surface Coating Operations: Section 1.0, Subsections 2.3, 4.3, 4.5.1, 5.2, and Sections 6.0 and 7.0.

(*21*) Regulation 7.23 Standard of Performance for New Perchloroethylene Dry Cleaning Facilities: Section 1.0 and Subsection 4.5.

(*22*) Regulation 7.52 Standard of Performance for New Fabric, Vinyl, and Paper Surface Coating Operations: Section 1.0, Subsections 2.3, 2.12, 4.1, 4.3, 4.5.1, and 5.3, and Section 6.0.

(*23*) Regulation 7.56 Standard of Performance for Leaks from New Petroleum Refinery Equipment: Subsection 2.4 and 2.6, and Section 7.0.

(*24*) Regulation 7.57 Standard of Performance for New Graphic Arts Facilities Using Rotogravure and Flexography: Section 1.0, Subsections 2.8, 4.2, 4.4.1, and 5.2, and Sections 6.0, 7.0, and 8.0.

(*25*) Regulation 7.58 Standard of Performance for New Factory Surface Coating Operations of Flat Wood Paneling: Section 1.0, Subsection 2.5, 4.4.1, and 5.4, and Section 6.0.

(*26*) Regulation 7.59 Standard of Performance for New Miscellaneous Metal Parts and Products Surface Coating Operations: Section 1.0, Subsections 2.2, 2.4, 2.5, 2.8.7, 4.3, 4.5.1, 5.1.1, 5.1.2, 5.1.4, 5.2, and 5.4, and Sections 6.0 and 7.0.

(*27*) Regulation 7.60 Standard of Performance for New Synthesized Pharmaceutical Product Manufacturing Operations: Section 1.0 and Section 2.0.

(*28*) Regulation 7.61 Standard of Performance for New Pneumatic Rubber Tire Manufacturing Plants: Section 1.0, Subsections 2.2, 2.3, 2.4, 2.5, 2.6, and 2.7, and Section 3.0.

(ii) Other material.

(A) Letter dated February 12, 1992, from the Commonwealth of Kentucky Natural Resources and Environmental Protection Cabinet.

(69) Revisions to the Commonwealth of Kentucky State Implementation Plan (SIP) concerning the Commonwealth and Jefferson County, Kentucky for Volatile Organic Compounds were submitted on October 20, 1992, February 17, 1993, and March 4, 1993, by the Kentucky Natural Resources and Environmental Protection Cabinet.

(i) Incorporation by reference.

(A) Revisions to the following Jefferson County Regulations were effective November 18, 1992.

(*1*) Regulation 1.05. Compliance with Emission Standards and Maintenance Requirements.

(*2*) Regulation 1.06. Source Self-Monitoring and Reporting.

(*3*) Regulation 6.17. Standard of Performance for Existing Automobile and Truck Surface Coating Operations.

(*4*) Regulation 6.36. Standard of Performance for Existing Metal Parts and Products Surface Coating Operations at Heavy Duty Truck Manufacturing Plants.

(B) Revisions to the following Commonwealth of Kentucky Regulations were effective June 24, 1992.

(*1*) Regulation 401 KAR 50:010. Definitions and abbreviations of terms used in Title 401, Chapters 50, 51, 53, 55, 57, 59, 61, 63, and 65.

(*2*) Regulation 401 KAR 50:012. General application.

(*3*) Regulation 401 KAR 50:047. Test procedures for capture efficiency.

(*4*) Regulation 401 KAR 51:001. Definitions and abbreviations of terms used in Title 401, Chapter 51.

(*5*) Regulation 401 KAR 59:001. Definitions and abbreviations of terms used in Title 401, Chapter 59.

(*6*) Regulation 401 KAR 59:185. New solvent metal cleaning equipment.

(*7*) Regulation 401 KAR 59:190. New insulation of magnet wire operations.

(*8*) Regulation 401 KAR 59:210. New fabric, vinyl and paper surface coating operations.

(*9*) Regulation 401 KAR 59:212. New graphic arts facilities using rotogravure and flexography.

(*10*) Regulation 401 KAR 59:214. New factory surface coating operations of flat wood paneling.

(*11*) Regulation 401 KAR 59:225. New miscellaneous metal parts and products surface coating operations.

(*12*) Regulation 401 KAR 59:230. New synthesized pharmaceutical product manufacturing operations.

(*13*) Regulation 401 KAR 59:240. New perchloroethylene dry cleaning systems.

(*14*) Regulation 401 KAR 61:001. Definitions and abbreviations of terms used in Title 401, Chapter 61.

(*15*) Regulation 401 KAR 61:050. Existing storage vessels for petroleum liquids.

(*16*) Regulation 401 KAR 61:090. Existing automobile and light-duty truck surface coating operations.

(*17*) Regulation 401 KAR 61:095. Existing solvent metal cleaning equipment.

(*18*) Regulation 401 KAR 61:100. Existing insulation of magnet wire operations.

(*19*) Regulation 401 KAR 61:105. Existing metal furniture surface coating operations.

(*20*) Regulation 401 KAR 61:110. Existing large appliance surface coating operations.

(*21*) Regulation 401 KAR 61:120. Existing fabric, vinyl and paper surface coating operations.

(*22*) Regulation 401 KAR 61:124. Existing factory surface coating operations of flat wood paneling.

(*23*) Regulation 401 KAR 61:125. Existing can surface coating operations.

(*24*) Regulation 401 KAR 61:130. Existing coil surface coating operations.

(*25*) Regulation 401 KAR 61:132. Existing miscellaneous metal parts and products surface coating operations.

(*26*) Regulation 401 KAR 61:137. Leaks from existing petroleum refinery equipment.

(*27*) Regulation 401 KAR 61:150. Existing synthesized pharmaceutical product manufacturing operations.

(*28*) Regulation 401 KAR 61:155. Existing pneumatic rubber tire manufacturing plants.

(*29*) Regulation 401 KAR 61:160. Existing perchloroethylene dry cleaning systems.

(*30*) Regulation 401 KAR 61:175. Leaks from existing synthetic organic chemical and polymer manufacturing equipment.

(*31*) Regulation 401 KAR 63:001. Definitions and abbreviations of terms used in Title 401, Chapter 63.

(*32*) Regulation 401 KAR 63:025. Asphalt paving operations.

(C) Kentucky Regulation 401 KAR 59:315, Specific New Sources, effective June 24, 1992.

(D) Revisions to following Kentucky Regulations were effective February 8, 1993.

(*1*) Regulation 401 KAR 51:010. Attainment Status Designations.

(*2*) Regulation 401 KAR 59:175. New service stations.

(*3*) Regulation 401 KAR 61:085. Existing service stations.

(*4*) Regulation 401 KAR 63:031. Leaks from Gasoline Tanks.

(ii) Other material. None.

(70) The maintenance plan for the Owensboro and Edmonson County Areas which include Daviess, a portion of Hancock, and Edmonson Counties submitted by the Commonwealth of Kentucky Natural Resources and Environmental Protection Cabinet on November 13, 1992, November 24, 1992, March 10, 1993, July 16, 1993, March 3, 1994, and August 29, 1994, as part of the Kentucky SIP. The 1990 Baseline Emission Inventory for the Owensboro and Edmonson County areas which include Daviess, a portion of Hancock, and Edmonson Counties.

(i) Incorporation by reference.

(A) Commonwealth of Kentucky Attainment Demonstration and Ten Year Maintenance Plan for All Areas Designated Marginal Nonattainment for Ozone. The effective date is December 28, 1992.

(B) Attachment A—Demonstration of Permanent and Enforceable Reductions and Calculations of Interim Year Emission Projections. The effective date is August 26, 1994.

(C) Attachment B—VOC Emissions Summary for Kentucky's Marginal Ozone Nonattainment Areas. The effective date is August 26, 1994.

(D) Attachment C—CO Emissions Summary for Kentucky's Marginal Ozone Nonattainment Areas. The effective date is August 26, 1994.

(E) Attachment D—NO_X Emissions Summary for Kentucky's Marginal Ozone Nonattainment Areas. The effective date is August 26, 1994.

(F) Table 6–12 Biogenic Emissions Hancock County, Kentucky. The effective date is December 28, 1992.

(G) Table 6–11 Biogenic Emissions Daviess County, Kentucky. The effective date is December 28, 1992.

(H) Table 6–1. Biogenic Emissions Edmonson County, Kentucky. The effective date is December 28, 1992.

(ii) Other material.

(A) February 28, 1994, letter from John E. Hornback, Director, Division for Air Quality to Mr. Doug Neeley, Chief, Air Programs Branch.

(B) October 4, 1994, letter from Phillip J. Shepherd, Secretary, Natural Resources and Environmental Protection Cabinet to John H. Hankinson, Regional Administrator, USEPA Region IV.

(71) The Commonwealth of Kentucky, Natural Resources and Environmental Protection Cabinet submitted revisions to the Kentucky State Implementation Plan on January 15, 1993 These revisions address the requirements of section 507 of title V of the CAA and establish the Small Business Stationary Source Technical and Environmental Assistance Program (PROGRAM).

(i) Incorporation by reference.

(A) Revision to the Kentucky State Implementation Plan to incorporate document titled "Kentucky Small Business Stationary Source Technical Environmental Assistance Program" which was approved by the Kentucky Natural Resources and Environmental Protection Cabinet effective on July 15, 1993.

(ii) Additional Material. None.

(72) Modifications to the existing basic I/M program in Jefferson County to implement an anti-tampering check, pressure testing of the evaporative control system, and testing of commuter vehicles submitted by the Commonwealth of Kentucky on November 12, 1993.

(i) Incorporation by reference. Regulation 8.01 and 8.02, adopted on February 17, 1993, and Regulation 8.03 adopted on February 17, 1993.

(ii) Other material. None.

(73) The maintenance plan for the Paducah area which include Livingston and Marshall Counties submitted by the Commonwealth of Kentucky Natural Resources and Environmental Protection Cabinet on November 13, 1992, November 24, 1992, March 10, 1993, July 16, 1993, March 3, 1994, and August 29,

1994, as part of the Kentucky SIP. The 1990 Baseline Emission Inventory for the Paducah area which include Livingston and Marshall Counties.

(i) Incorporation by reference.

(A) Commonwealth of Kentucky Attainment Demonstration and Ten Year Maintenance Plan for all areas designated Marginal Nonattainment for Ozone. The effective date is January 15, 1993.

(B) Table 6–13 Biogenic Emissions, Livingston County, Kentucky. The effective date is January 15, 1993.

(C) Table 6–14 Biogenic Emissions, Marshall County, Kentucky. The effective date is January 15, 1993.

(ii) Other material.

(A) January 15, 1993, letter from Phillip J. Shepherd, Secretary, Natural Resources and Environmental Protection Cabinet to Patrick Tobin, Acting Regional Administrator, U.S. EPA Region IV.

(B) February 28, 1994, letter from John E. Hornback, Director, Division for Air Quality to Mr. Doug Neeley, Chief, Air Programs Branch.

(C) October 4, 1994, letter from Phillip J. Shepherd, Secretary, Natural Resources and Environmental Protection Cabinet to John H. Hankinson, Regional Administrator, U.S. EPA Region IV.

(74)–(75) [Reserved]

(76) The maintenance plan and for the Lexington area which include Fayette and Scott Counties submitted by the Commonwealth of Kentucky Natural Resources and Environmental Protection Cabinet on November 13, 1992, November 24, 1992, March 10, 1993, July 16, 1993, March 3, 1994, and August 29, 1994, September 28, 1994 and June 14, 1995, as part of the Kentucky SIP. The 1990 Baseline Emission Inventory for the Lexington area which include Fayette and Scott Counties.

(i) Incorporation by reference.

(A) Commonwealth of Kentucky Attainment Demonstration and Ten Year Maintenance Plan for all areas designated Marginal Nonattainment for Ozone. The effective date is January 15, 1993.

(B) Table 6–6 Biogenic Emissions Fayette County, Kentucky. The effective date is January 15, 1993.

(C) Table 6–7 Biogenic Emissions, Scott, Kentucky. The effective date is January 15, 1993.

(ii) Other material.

(A) February 28, 1994, letter from John E. Hornback, Director, Division for Air Quality to Mr. Doug Neeley, Chief, Air Programs Branch.

(B) October 4, 1994, letter from Phillip J. Shepherd, Secretary, Natural Resources and Environmental Protection Cabinet to John H. Hankinson, Regional Administrator, U.S. EPA Region 4.

(C) January 15, 1993, letter from Phillip J. Shepherd, Secretary, Natural Resources and Environmental Protection Cabinet to Patrick M. Tobin, Acting Regional Administrator, U.S. EPA Region 4.

(77) Revisions to the Commonwealth of Kentucky State Implementation Plan (SIP) concerning emission statements were submitted on December 29, 1994, by the Kentucky Natural Resources and Environmental Protection Cabinet.

(i) Incorporation by reference.

(A) Regulation 401 KAR 50:035 Permits. Section 1, Section 2(1) and Section 10. Regulation became effective September 28, 1994.

(ii) None.

(78) Operating Permit requiring VOC RACT for Calgon Corporation in the Kentucky portion of the Ashland/Huntington ozone nonattainment area, submitted November 11, 1994.

(i) Incorporation by reference. Natural Resources and Environmental Protection Cabinet; Kentucky Department for Environmental Protection; Division for Air Quality; Permit 0–94–020; Calgon Carbon Corporation, effective on November 17, 1994.

(ii) Other material. Letter of November 23, 1994, from the Commonwealth of Kentucky Natural Resources and Environmental Protection Cabinet.

(79) Revisions to the Commonwealth of Kentucky State Implementation Plan (SIP) regarding the definition of volatile organic compound (VOC) submitted on January 27, 1995.

(i) Incorporation by reference.

(A) 401 KAR 50:010. Definitions and abbreviations of terms used in 401 KAR Chapters 50, 51, 53, 55, 57, 59, 61, 63, and 65, effective April 6, 1995.

(B) 401 KAR 51:001. Definitions and abbreviations of terms used in 401 KAR Chapter 51, effective April 6, 1995.

(C) 401 KAR 59:001. Definitions and abbreviations of terms used in 401 KAR Chapter 59, effective April 6, 1995.

(D) 401 KAR 61:001. Definitions and abbreviations of terms used in 401 KAR Chapter 61, effective April 6, 1995.

(E) 401 KAR 63:001. Definitions and abbreviations of terms used in 401 KAR Chapter 63, effective April 6, 1995.

(F) 401 KAR 65:001. Definitions and abbreviations of terms used in 401 KAR Chapter 65, effective April 6, 1995.

(ii) Other material.

(A) May 4, 1995, letter from Phillip J. Shepherd, Secretary, Natural Resources and Environmental Protection Cabinet to John H. Hankinson, Regional Administrator, U.S. EPA, Region IV.

(80) The maintenance plan for the Ashland-Huntington area which includes Boyd and a portion of Greenup Counties was submitted by the Commonwealth of Kentucky Natural Resources and Environmental Protection Cabinet on November 13 and May 24, 1995, as part of the Kentucky SIP. The 1990 Baseline Emission Inventory for the Ashland-Huntington area which includes Boyd and a portion of Greenup Counties which was submitted on November 13, 1992.

(i) Incorporation by reference.

(A) Kentucky Natural Resources and Environmental Protection Cabinet Request to Redesignate the Huntington/Ashland Moderate Ozone Nonattainment Area, Maintenance Plan, effective May 24, 1995.

(B) Appendix F Kentucky Projected Emissions Summary: VOC, CO, and NO_X, effective May 24, 1995.

(C) Table 6–1 Summary of Biogenic Emissions Huntington-Ashland MSA, effective May 24, 1995.

(ii) Other material.

(A) May 24, 1995, letter from Phillip J. Shepherd, Secretary, Natural Resources and Environmental Protection Cabinet to John H. Hankinson, Regional Administrator, USEPA Region 4.

(81) Revisions to air permit rules submitted by the Kentucky Natural Resources and Environmental Protection Cabinet on December 29, 1994.

(i) Incorporation by reference. Revised Rule 401 KAR 50:035, "Permits", Sections 1 through 7, effective September 28, 1994.

(ii) Other material. None.

(82) Revision to the Kentucky State Implementation Plan; Regulation 6.40 of the Air Pollution Control District of Jefferson County which was submitted to EPA on March 4, 1993.

(i) Incorporation by reference.

Regulation 6.40 Standards of Performance for Gasoline Transfer to Motor Vehicles (Stage II Vapor Recovery and Control) which were adopted on December 16, 1992.

(ii) Other material. None.

(83) Revisions to the Kentucky State Implementation Plan submitted by the Natural Resources and Environmental Protection Cabinet on June 15, 1983.

(i) Incorporation by reference.

401 KAR 50:025 Classification of Counties, and 401 KAR 61:015 Existing Indirect Heat Exchangers, effective June 1, 1983.

(ii) Additional material. None.

(84) Revisions to the Kentucky State Implementation Plan submitted by the Natural Resources and Environmental Protection Cabinet on December 29, 1994. The regulations being revised are 401 KAR 59:101 New Bulk Gasoline Plants and 401 KAR 61:056 Existing Bulk Gasoline Plants.

(i) Incorporation by reference. Division for Air Quality regulations 401 KAR 59:101 New bulk gasoline plants, and 401 KAR 61:056 Existing bulk gasoline plants, effective September 28, 1994.

(ii) Additional material. None.

(85) The Commonwealth of Kentucky submitted revisions to the Kentucky SIP on June 19, 1996. These revisions involve changes to 401 KAR Chapters 50, 51, 59, 61, 63, and 65.

(i) Incorporation by reference. 401 KAR Chapters 50:010(62), 51.001(62), 59:001(63), 61:001(63), 63:001(62), and 65:001(31) of the Kentucky regulations effective on June 6, 1996.

(ii) Other material. None.

(86) Revision to the Kentucky State Implementation Plan submitted by the Natural Resources and Environmental Protection Cabinet on May 20, 1997. The revision is for the Reynolds Metals Company.

(i) Incorporation by reference. Air Pollution Control District of Jefferson County Permit numbers 103–74, 104–74, 105–74, 106–74, 110–74, and 111–74, effective April 16, 1997.

(ii) Other material. None.

(87) Revisions to the Kentucky State Implementation Plan submitted by the Natural Resources and Environmental Protection Cabinet on March 21, 1997. The regulation being revised is 401 KAR 51:017 Prevention of significant deterioration of air quality.

(i) Incorporation by reference. Division of Air Quality regulations 401 KAR 51:017 Prevention of significant deterioration of air quality effective March 12, 1997.

(ii) Other material. None.

(88) Modifications to the existing basic I/M program in Jefferson County to implement loaded mode testing of vehicles submitted by the Commonwealth of Kentucky on November 10, 1997.

(i) Incorporation by reference.

Regulation 8.01 and 8.02, adopted on October 15, 1997.

(ii) Other material. None.

(89) Revisions to the Kentucky State Implementation Plan submitted by the Natural Resources and Environmental Protection Cabinet on December 19, 1997. The regulations being revised are 401 KAR 50:012 General application and 401 KAR 51:010 Attainment status designations.

(i) Incorporation by reference. Division of Air Quality regulations 401 KAR 50:012 General application and 401 KAR 51:010 Attainment status designations are effective November 12, 1997.

(ii) Other material. None.

(90) [Reserved]

(91) The maintenance plan for Edmonson County and Owensboro ozone area submitted by the Commonwealth of Kentucky through the Natural Resources and Environmental Protection Cabinet on April 16, 1998, as part of the Kentucky SIP.

(i) Incorporation by reference.

Mobile Emissions Budgets for Owensboro Area and Edmonson County Marginal Ozone Maintenance Areas: Introduction page and Tables 1 through 8 effective April 14, 1998.

(ii) Other material. None.

(92) Revisions to the Kentucky State Implementation Plan submitted by the Natural Resources and Environmental Protection Cabinet on February 3, 1998. The regulations being revised are 401 KAR 59:174 Stage II control at gasoline dispensing facilities, 401 KAR 63:005 Open burning, and 401 KAR 65:010 Vehicle emission control programs rules. Adoption of the Kentucky 15 Percent Plan, the I/M program and the 1990 baseline emissions inventory.

(i) Incorporation by reference.

(A) Division of Air Quality regulations 401 KAR 59:174 Stage II control at gasoline dispensing facilities, 401 KAR 63:005 Open burning, and 401 KAR 65:010 Vehicle emission control programs rules are effective January 12, 1998.

(B) Tables showing the Cincinnati 1990 Baseline Emissions Inventory, 1990 Adjusted Baseline Inventory, and 1990 Rate of Progress Inventory, Summary of Biogenic Emissions and Anticipated Emissions after Plan Implementation which are effective September 11, 1998.

(ii) Other material. None.

(93) Modifications to the existing basic I/M program in Jefferson County to implement a check of a vehicle's On-Board Diagnostic system, for vehicles of model 1996 and newer that are so equipped, submitted by the Commonwealth of Kentucky on August 27, 1998.

(i) Incorporation by reference. Regulation 8.02, adopted on July 15, 1998.

(ii) Other material. None.

(94) [Reserved]

(95) Revisions to the Jefferson County portion of the Kentucky State Implementation Plan submitted by the Kentucky Natural Resources and Environmental Protection Cabinet on November 10, 1998. The regulation being added is Regulation 2.17, Federally Enforceable District Origin Operating Permits.

(i) Incorporation by reference. Air Pollution Control District of Jefferson County Regulation 2.17, Federally Enforceable District Origin Operating Permits effective June 21, 1995.

(ii) Other material. None.

[37 FR 10868, Mar. 31, 1972. Redesignated at 64 FR 28750, May 27, 1999]

EDITORIAL NOTE: For FEDERAL REGISTER citations affecting § 52.939, see the List of CFR Sections Affected, which appears in the

Finding Aids section of the printed volume and on GPO Access.

Subpart T—Louisiana

§ 52.970 Identification of plan.

(a) *Purpose and scope.* This section sets forth the applicable State Implementation Plan (SIP) for Louisiana under section 110 of the Clean Air Act, 42 U.S.C. 7410, and 40 CFR part 51 to meet national ambient air quality standards.

(b) *Incorporation by reference.* (1) Material listed in paragraphs (c),(d) and (e) of this section with an EPA approval date prior to July 1, 1998, was approved for incorporation by reference by the Director of the Federal Register in accordance with 5 U.S.C. 552(a) and 1 CFR part 51. Material is incorporated as it exists on the date of the approval, and notice of any change in the material will be published in the FEDERAL REGISTER. Entries in paragraphs (c), (d) and (e) of this section with EPA approval dates after July 1, 1998, will be incorporated by reference in the next update to the SIP compilation.

(2) EPA Region 6 certifies that the rules/regulations provided by EPA in the SIP compilation at the addresses in paragraph (b)(3) of this section are an exact duplicate of the officially promulgated State rules/regulations which have been approved as part of the State Implementation Plan as of July 1, 1998.

(3) Copies of the materials incorporated by reference may be inspected at the Region 6 EPA Office at 1445 Ross Avenue, Suite 700, Dallas, Texas, 75202–2733; the EPA, Air and Radiation Docket and Information Center, Air Docket (6102), 401 M St., SW., Washington, DC 20460; or at the National Archives and Records Administration (NARA). For information on the availability of this material at NARA, call 202–741–6030, or go to: *http://www.archives.gov/federal_register/code_of_federal_regulations/ibr_locations.html.*

(c) *EPA approved regulations.*

EPA APPROVED LOUISIANA REGULATIONS IN THE LOUISIANA SIP

State citation	Title/subject	State approval date	EPA approval date	Comments
LAC Title 33. Environmental Quality Part III. Air Chapter 1—General Provisions				
Section 101	Authority, Matter Incorporated by Reference, and Permit Fee System.	Dec. 1987, LR13:741	03/08/89, 54 FR 09795	Ref 52.999(c)(49)
Section 103	Scope and Severability of Air Regulations.	Dec. 1987, LR13:741	03/08/89, 54 FR 09795	Ref 52.999(c)(49)
Section 107	Procedure for Handling Investigations, Complaints and Confidentiality.	Dec. 1987, LR13:741	03/08/89, 54 FR 09795	Ref 52.999(c)(49)
Section 109	Necessary Changes for Approval of Compliance Schedules and Annual Report Requirements.	Dec. 1987, LR13:741	03/08/89, 54 FR 09795	Ref 52.999(c)(49)
Section 111	Definitions under the Louisiana Air Regulations.	Aug. 1991, LR17:777	05/05/94, 59 FR 23166	Ref 52.999(c)(60)
Chapter 2—Rules and Regulations for the Fee System of the Air Quality Control Programs				
Section 223	Fee Schedule Listing	Nov. 1994, LR20:1263	10/23/95, 60 FR 54308	Ref 52.999(c)(66)
Chapter 5—Permit Procedures				
Section 501	Authority	Dec. 1987, LR13:741	03/08/89, 54 FR 09795	Ref 52.999(c)(49)
Section 503	Procedures for Notification for Interstate Pollution.	Dec. 1987, LR13:741	03/08/89, 54 FR 09795	Ref 52.999(c)(49)
Section 504	Nonattainment New Source Review Procedures.	Dec. 2001, LR 27:2225	09/30/02, 67 FR 61270	
Section 505	For Emissions Below PSD de minimis Levels.	Dec. 1987, LR13:741	03/08/89, 54 FR 09795	Ref 52.999(c)(49)
			Correction 03/06/92, 57 FR 08076	Ref 52.999(c)(58)
Section 507	Notification Requirement (for Emission Reduction).	Dec. 1987, LR13:741	03/08/89, 54 FR 09795	Ref 52.999(c)(49)

EPA APPROVED LOUISIANA REGULATIONS IN THE LOUISIANA SIP—Continued

State citation	Title/subject	State approval date	EPA approval date	Comments
Section 509	Prevention of Significant Deterioration.	Feb. 1995, LR21:170	10/15/96, 61 FR 53639	Ref 52.999(c)(69)
Chapter 6—Regulations on Control of Emissions Reduction Credits Banking				
Section 601	Purpose	Feb. 2002, LR 28:301	09/27/02, 67 FR 60877	
Section 603	Applicability	Feb. 2002, LR 28:301	09/27/02, 67 FR 60877	
Section 605	Definitions	Feb. 2002, LR 28:301	09/27/02, 67 FR 60877	
Section 607	Determination of Creditable Emission Reductions.	Feb. 2002, LR 28:302	09/27/02, 67 FR 60877	
Section 613	ERC Bank Recordkeeping and Reporting Requirements.	Feb. 2002, LR 28:303	09/27/02, 67 FR 60877	
Section 615	Schedule for Submitting Applications.	Feb. 2002, LR 28:304	09/27/02, 67 FR 60877	
Section 617	Procedures for Review and Approval of ERCs.	Feb. 2002, LR 28:304	09/27/02, 67 FR 60877	
Section 619	Emission Reduction Credit Bank	Feb. 2002, LR 28:305	09/27/02, 67 FR 60877	
Chapter 7—Ambient Air Quality				
Section 701	Purpose and Information Regarding Standards for PM10, SO2, CO, Atmospheric Oxidants, NO_X and Pb.	Dec. 1987, LR13:741	03/08/89, 54 FR 09795	Ref 52.999(c)(49)
Section 703	Scope of Ambient Air Quality Standards for PM10, SO2, CO, Ozone, NO_X, and Pb.	Dec. 1987, LR13:741	03/08/89, 54 FR 09795	Ref 52.999(c)(49)
Section 705	Standards: Description of Ambient Air Quality Standards.	Dec. 1987, LR13:741	03/08/89, 54 FR 09795	Ref 52.999(c)(49)
Section 707	Degradation of Ambient Air Having Higher Quality than Set Forth in these Sections Restricted.	Dec. 1987, LR13:741	03/08/89, 54 FR 09795	Ref 52.999(c)(49)
Section 709	Measurement of Concentrations PM10, SO2, CO, Atmospheric Oxidants, NO_X, and Pb.	Jun. 1988, LR14:348	06/15/89, 54 FR 25451	Ref 52.999(c)(50)
Table 1	Primary Ambient Air Quality Standards.	Jun. 1988, LR14:348	06/15/89, 54 FR 25451	Ref 52.999(c)(50)
Table 1a	Secondary Ambient Air Quality Standards.	Jun. 1988, LR14:348	06/15/89, 54 FR 25451	Ref 52.999(c)(50)
Table 2	Ambient Air—Methods of Contaminant Measurements.	Jun. 1988, LR14:348	06/15/89, 54 FR 25451	Ref 52.999(c)(50)
Chapter 9—General Regulations on Control of Emissions and Emission Standards				
Section 901	Purpose	Dec. 1987, LR13:741	03/08/89, 54 FR 09795	Ref 52.999(c)(49)
Section 903	Scope	Dec. 1987, LR13:741	03/08/89, 54 FR 09795	Ref 52.999(c)(49)
Section 905	Control Facilities to be Installed When Feasible.	Dec. 1987, LR13:741	03/08/89, 54 FR 09795	Ref 52.999(c)(49)
Section 907	Emission Resulting in Undesirable Levels Not Allowed (From Refuse Disposal).	Dec. 1987, LR13:741	03/08/89, 54 FR 09795	Ref 52.999(c)(49)
Section 909	Responsible Person to have Test Made.	Dec. 1987, LR13:741	03/08/89, 54 FR 09795	Ref 52.999(c)(49)
Section 911	Department May Make Tests	Dec. 1987, LR13:741	03/08/89, 54 FR 09795	Ref 52.999(c)(49)
Section 913	New Sources to Provide Sampling Ports.	Dec. 1987, LR13:741	03/08/89, 54 FR 09795	Ref 52.999(c)(49)
Section 915	Emission Monitoring Requirements: Applicability, Special Considerations, Exemptions, and Circumvention.	Dec. 1987, LR13:741	03/08/89, 54 FR 09795	Ref 52.999(c)(49)
Section 917	Variances	Dec. 1987, LR13:741	03/08/89, 54 FR 09795	Ref 52.999(c)(49)
Section 918	Recordkeeping and Annual Reporting.	Dec. 1987, LR13:741	03/08/89, 54 FR 09795	Ref 52.999(c)(49)
Section 919	Emission Inventory	Oct. 1994, LR20:1102	01/06/95, 60 FR 02016	Ref 52.999(c)(65)
Section 921	Stack Heights	Dec. 1987, LR13:741	03/08/89, 54 FR 09795	Ref 52.999(c)(49)
Section 923	Maintenance of Pay	Dec. 1987, LR13:741	03/08/89, 54 FR 09795	Ref 52.999(c)(49)
Section 925	Mass Emission Rate Control Plan ..	Dec. 1987, LR13:741	03/08/89, 54 FR 09795	Ref 52.999(c)(49)
Section 927	Notification Required (Emergency Occurrences).	Dec. 1987, LR13:741	03/08/89, 54 FR 09795,	Ref 52.999(c)(49)
Section 929	Violation of Emission Regulation Cannot be Authorized.	Dec. 1987, LR13:741	03/08/89, 54 FR 09795	Ref 52.999(c)(49)

EPA APPROVED LOUISIANA REGULATIONS IN THE LOUISIANA SIP—Continued

State citation	Title/subject	State approval date	EPA approval date	Comments
Chapter 11—Control of Emissions From Smoke				
Section 1101 ...	Control of Air Pollution from Smoke: Purpose and Control of Smoke.	Dec. 1987, LR13:741	03/08/89, 54 FR 09795	Ref 52.999(c)(49)
Section 1103 ...	Impairment of Visibility on Public Roads Prohibited.	Dec. 1987, LR13:741	03/08/89, 54 FR 09795	Ref 52.999(c)(49)
Section 1105 ...	Smoke from Flaring Shall be no Darker than No. 1 Ringelmann.	Dec. 1987, LR13:741	03/08/89, 54 FR 09795	Ref 52.999(c)(49)
Section 1107 ...	Exemptions	Dec. 1987, LR13:741	03/08/89, 54 FR 09795	Ref 52.999(c)(49)
Section 1109 ...	Control of Air Pollution from Outdoor Burning.	Dec. 1987, LR13:741	03/08/89, 54 FR 09795	Ref 52.999(c)(49)
Section 1111 ...	Exclusion: Variance, Unpopulated Areas and Water Vapor.	Dec. 1987, LR13:741	03/08/89, 54 FR 09795	Ref 52.999(c)(49)
Chapter 13—Emission Standards for Particulate Matter				
Subchapter A ..	General			
Section 1301 ...	Emission Standards for Particulate Matter.	Jun 1988, LR14:348	06/15/89, 54 FR 25451	Ref 52.999(c)(50)
Section 1303 ...	Provision Governing Specific Activities.	Jun 1988, LR14:348	06/15/89, 54 FR 25451	Ref 52.999(c)(50)
Section 1305 ...	Control of Fugitive Emissions	Jun 1988, LR14:348	06/15/89, 54 FR 25451	Ref 52.999(c)(50)
Section 1307 ...	Degradation	Dec. 1987, LR13:741	03/08/89, 54 FR 09795	Ref 52.999(c)(49)
Section 1309 ...	Measurements of Concentrations ...	Dec. 1987, LR13:741	03/08/89, 54 FR 09795	Ref 52.999(c)(49)
Subchapter B ..	Fluid Catalytic Cracking Units			
Section 1311 ...	Emission Limits—Including Fluid Catalytic Cracking Units.	Jun 1988, LR14:348	06/15/89, 54 FR 25451	Ref 52.999(c)(50)
Subchapter C ..	Fuel Burning Equipment			
Section 1313 ...	Emissions from Fuel Burning Equipment.	Jun 1988, LR14:348	06/15/89, 54 FR 25451	Ref 52.999(c)(50)
Section 1315 ...	More Stringent Regulations may be Prescribed if Particulates are Toxic.	Jun 1988, LR14:348	06/15/89, 54 FR 25451	Ref 52.999(c)(50)
Section 1317 ...	Exclusions	Dec. 1987, LR13:741	03/08/89, 54 FR 09795	Ref 52.999(c)(49)
Subchapter D ..	Refuse Incinerators			
Section 1319 ...	Refuse Incinerators: Purpose, Scope, Capacity, Approval of, Allowable Emissions, Disposal, and Restrictions.	Jun 1988, LR14:348	06/15/89, 54 FR 25451	Ref 52.999(c)(50)
Subchapter E ..	Leadened Particulate Matter			
Section 1321 ...	Emission Standards for Leaded Particulate Matter.	Dec. 1987, LR13:741	03/08/89, 54 FR 09795	Ref 52.999(c)(49)
Table 3	Allowable Rate of Emissions Based on Process Weight Rate.	Dec. 1987, LR13:741	03/08/89, 54 FR 09795	Ref 52.999(c)(49)
Chapter 14—Conformity				
Subchapter A ..	Determining Conformity of General Federal Actions to State or Federal Implementations Plans			
Section 1401 ...	Purpose	Nov. 1994, LR20:1268	09/13/96, 61 FR 48409	Ref 52.999(c)(67)
Section 1402 ...	Scope	Nov. 1994, LR20:1268	09/13/96, 61 FR 48409	Ref 52.999(c)(67)
Section 1403 ...	Prohibition	Nov. 1994, LR20:1268	09/13/96, 61 FR 48409	Ref 52.999(c)(67)
Section 1404 ...	Definitions	Nov. 1994, LR20:1268	09/13/96, 61 FR 48409	Ref 52.999(c)(67)
Section:				
1405	Applicability	Nov. 1994, LR20:1268	09/13/96, 61 FR 48409	Ref 52.999(c)(67)
1405.B	.....	06/20/97, LR23:720	03/09/98, 63 FR 11372	Ref 52.999(c)(75)
Section 1406 ...	Conformity Analysis	Nov. 1994, LR20:1268	09/13/96, 61 FR 48409	Ref 52.999(c)(67)
Section 1407 ...	Reporting Requirements	Nov. 1994, LR20:1268	09/13/96, 61 FR 48409	Ref 52.999(c)(67)
Section 1408 ...	Public Participation	Nov. 1994, LR20:1268	09/13/96, 61 FR 48409	Ref 52.999(c)(67)
Section 1409 ...	Frequency of Conformity Determinations.	Nov. 1994, LR20:1268	09/13/96, 61 FR 48409	Ref 52.999(c)(67)
Section 1410 ...	Criteria for Determining Conformity of General Federal Actions.	Nov. 1994, LR20:1268	09/13/96, 61 FR 48409	Ref 52.999(c)(67)
Section 1411 ...	Procedures for Conformity Determinations of General Federal Actions.	Nov. 1994, LR20:1268	09/13/96, 61 FR 48409	Ref 52.999(c)(67)
Section 1412 ...	Mitigation of Air Quality Impacts	Nov. 1994, LR20:1268	09/13/96, 61 FR 48409	Ref 52.999(c)(67)
Section 1413 ...	Department Review	Nov. 1994, LR20:1268	09/13/96, 61 FR 48409	Ref 52.999(c)(67)
Section 1414 ...	Enforcement Provisions	Nov. 1994, LR20:1268	09/13/96, 61 FR 48409	Ref 52.999(c)(67)

EPA APPROVED LOUISIANA REGULATIONS IN THE LOUISIANA SIP—Continued

State citation	Title/subject	State approval date	EPA approval date	Comments
Section 1415 ...	Savings Provision	Nov. 1994, LR20:1268	09/13/96, 61 FR 48409	Ref 52.999(c)(67)
Subchapter B ..	Conformity to State or Federal Implementation Plans of Transportation Plans, Programs, and Projects Developed, Funded, or Approved under Title 23 U.S.C. or the Federal Transit Act			
Section 1431 ...	Purpose	Sept. 1998, LR24:1684	12/29/99, 64 FR 72938	
Section 1432 ...	Incorporation by Reference	July 1998, LR24:1280	12/29/99, 64 FR 72938	No action is taken on the portions of LAC 33:III.1432 that contain 40 CFR 93.102(c), 93.104(d), 93.109(c)–(f), 93.118(e), 93.120(a)(2), 93.121(a)(1), and 93.124(b).
Section 1434 ...	Consultation	Nov. 1994, LR20:1278; July 1998, LR24:1280; Sept. 1998, LR24:1684; Oct. 1998, LR24:1925	12/29/99, 64 FR 72938	
Chapter 15—Emission Standards for Sulfur Dioxide				
Section 1501 ...	Degradation of Existing Emission Quality Restricted.	Apr. 1992, LR18:374	07/15/93, 58 FR 38060	Ref 52.999(c)(59)
Section 1503 ...	Emission Limitations	Apr. 1992, LR18:374	07/15/93, 58 FR 38060	Ref 52.999(c)(59)
Section 1505 ...	Variance	Apr. 1992, LR18:374	07/15/93, 58 FR 38060	Ref 52.999(c)(59)
Section 1507 ...	Exceptions, Startup provisions, On-line Operating Adjustments, and Bubble Concept.	Apr. 1992, LR18:374	07/15/93, 58 FR 38060	Ref 52.999(c)(59)
Section 1509 ...	Reduced Sulfur Compounds (New and Existing Sources).	Apr. 1992, LR18:374	07/15/93, 58 FR 38060	Ref 52.999(c)(59)
Section 1511 ...	Continuous Emissions Monitoring ..	Apr. 1992, LR18:374	07/15/93, 58 FR 38060	Ref 52.999(c)(59)
Section 1513 ...	Recordkeeping and Reporting	Apr. 1992, LR18:374	07/15/93, 58 FR 38060	Ref 52.999(c)(59)
Table 4	Emissions—Methods of Contaminant Measurement.	Apr. 1992, LR18:374	07/15/93, 58 FR 38060	Ref 52.999(c)(59)
Chapter 17—Control of Emissions of Carbon Monoxide (New Sources)				
Subchapter A ..	General			
Section 1701 ...	Degradation of Existing Emission Quality Restricted.	Dec. 1987, LR13:741	03/08/89, 54 FR 09795	Ref 52.999(c)(49)
Subchapter B ..	Ferrous Metal Emissions			
Section 1703 ...	Ferrous Metal Emissions	Dec. 1987, LR13:741	03/08/89, 54 FR 09795	Ref 52.999(c)(49)
Subchapter C ..	Petroleum Refinery Emissions			
Section 1705 ...	Petroleum Refinery Emissions	Dec. 1987, LR13:741	03/08/89, 54 FR 09795	Ref 52.999(c)(49)
Chapter 19—Mobile Sources				
Subchapter B ..	Clean Fuel Fleet			
Section 1951 ...	Purposes	Nov. 1994, LR20:1263	10/23/95, 60 FR 54308	Ref 52.999(c)(66)
Section 1953 ...	General Provisions	Nov. 1994, LR20:1263	10/23/95, 60 FR 54308	Ref 52.999(c)(66)
Section 1955 ...	Definitions	Nov. 1994, LR20:1263	10/23/95, 60 FR 54308	Ref 52.999(c)(66)
Section 1957 ...	Exemptions	Nov. 1994, LR20:1263	10/23/95, 60 FR 54308	Ref 52.999(c)(66)
Section 1959 ...	Emissions Standards	Nov. 1994, LR20:1263	10/23/95, 60 FR 54308	Ref 52.999(c)(66)
Section 1961 ...	Credits Program	Nov. 1994, LR20:1263	10/23/95, 60 FR 54308	Ref 52.999(c)(66)
Section 1963 ...	Emissions Reduction Credits Program—Reserved.	Nov. 1994, LR20:1263	10/23/95, 60 FR 54308	Ref 52.999(c)(66)
Section 1965 ...	Recordkeeping	Nov. 1994, LR20:1263	10/23/95, 60 FR 54308	Ref 52.999(c)(66)
Section 1967 ...	Conversion to Clean Fuel Vehicles—Reserved.	Nov. 1994, LR20:1263	10/23/95, 60 FR 54308	Ref 52.999(c)(66)
Section 1969 ...	Fuel Provider Requirements	Nov. 1994, LR20:1263	10/23/95, 60 FR 54308	Ref 52.999(c)(66)
Section 1971 ...	Enforcement	Nov. 1994, LR20:1263	10/23/95, 60 FR 54308	Ref 52.999(c)(66)
Section 1973 ...	Fees	Nov. 1994, LR20:1263	10/23/95, 60 FR 54308	Ref 52.999(c)(66)
Chapter 21—Control of Emissions of Organic Compounds				
Subchapter A ..	General			
Section 2101 ...	Compliance Schedules	Nov. 1990, LR16:959	05/05/94, 59 FR 23166	Ref 52.999(c)(60)

EPA APPROVED LOUISIANA REGULATIONS IN THE LOUISIANA SIP—Continued

State citation	Title/subject	State approval date	EPA approval date	Comments
Section 2103 ...	Storage of Volatile Organic Compounds (Large Tanks).	Dec. 1995, LR21:1333	10/22/96, 61 FR 54737	Ref 52.999(c)(71)(E)(F)(G)
Section 2105 ...	Storage of Volatile Organic Components (Small Tanks).			NOT IN SIP
Section 2107 ...	Volatile Organic Compounds—Loading.	Apr. 1991, LR17:360	05/05/94, 59 FR 23166	Ref 52.999(c)(60)
Section 2108 ...	Marine Vapor Recovery	Nov. 1990, LR16:959	10/22/96, 61 FR 54737	Ref 52.999(c)(71)(A)(B)
Section 2109 ...	Oil/Water—Separation	Oct. 1992, LR18:1122	07/25/96, 61 FR 38590	Ref 52.999(c)(64)
Section 2111 ...	Pumps and Compressors	Apr. 1991, LR17:360	05/05/94, 59 FR 23166	Ref 52.999(c)(60)
Section 2113 ...	Housekeeping	Apr. 1991, LR17:360	05/05/94, 59 FR 23166	Ref 52.999(c)(60)
Section 2115 ...	Waste Gas Disposal and Exemptions.	Mar. 1993, LR19:317	07/25/96, 61 FR 38590	Ref 52.999(c)(64)
Section 2117 ...	Exemptions	Feb. 1990, LR16:116	05/05/94, 59 FR 23166	Ref 52.999(c)(60)
Section 2119 ...	Variances	Feb. 1990, LR16:116	05/05/94, 59 FR 23166	Ref 52.999(c)(60)
Section 2121 ...	Fugitive Emission Control	Jul. 1991, LR17:654	05/05/94, 59 FR 23166	Ref 52.999(c)(60)
Section 2122 ...	Fugitive Emission Control for Ozone Nonattainment Areas.	Nov. 1994, LR20:1269	10/22/96, 61 FR 54737	Ref 52.999(c)(71)(C)(D)
Subchapter B ..	Organic Solvents			
Section 2123 ...	Organic Solvents	Oct. 1992, LR18:1122	07/25/96, 61 FR 38590	Ref 52.999(c)(64)
Subchapter C ..	Vapor Degreasers			
Section 2125 ...	Vapor Degreasers	Oct. 1992, LR18:1122	07/25/96, 61 FR 38590	Ref 52.999(c)(64)
Subchapter D ..	Cutback Paving Asphalt			
Section 2127 ...	Cutback Paving Asphalt	Apr. 1991, LR17:360	05/05/94, 59 FR 23166	Ref 52.999(c)(60)
Subchapter E ..	Perchloroethylene Dry Cleaning Systems			
Section 2129 ...	Perchloroethylene Dry Cleaning Systems.	Nov. 1990, LR16:959	05/05/94, 59 FR 23166	Ref 52.999(c)(60)
Subchapter F ..	Gasoline Handling			
Section 2131 ...	Filling of Gasoline Storage Vessels	Oct. 1992, LR18:1122	07/25/96, 61 FR 38590	Ref 52.999(c)(64)
Section 2132 ...	Stage II Vapor Recovery Systems for Control of Vehicle Refueling Emissions at Gasoline Dispensing Facilities.	Jan. 1993, LR19:46	03/25/94, 59 FR 14114	Ref 52.999(c)(61)
Section 2133 ...	Gasoline Bulk Plants	Jul. 1990, LR16:609	05/05/94, 59 FR 23166	Ref 52.999(c)(60)
Section 2135 ...	Bulk Gasoline Terminals	Oct.1992, LR18:1123	07/25/96, 61 FR 38590	Ref 52.999(c)(64)
Section 2137 ...	Gasoline Terminal Vapor-Tight Control Procedure.	Jul. 1990, LR16:609	05/05/94, 59 FR 23166	Ref 52.999(c)(60)
Subchapter G	Petroleum Refinery Operations			
Section 2139 ...	Refinery Vacuum Producing Systems.	Jul. 1991, LR17:654	05/05/94, 59 FR 23166	Ref 52.999(c)(60)
Section 2141 ...	Refinery Process Unit Turnarounds.	Jul. 1991, LR17:654	05/05/94, 59 FR 23166	Ref 52.999(c)(60)
Subchapter H ..	Graphic Arts			
Section 2143 ...	Graphic Arts (Printing) by Rotogravure and Flexographic Processes.	Oct. 1992, LR18:1123	07/25/96, 61 FR 38590	Ref 52.999(c)(64)
Subchapter I ...	Pharmaceutical Manufacturing Facilities			
Section 2145 ...	Pharmaceutical Manufacturing Facilities.	Nov. 1990, LR16:959	05/05/94, 59 FR 23166	Ref 52.999(c)(60)
Subchapter J ..	Limiting Volatile Organic Compound (VOC) Emissions from Reactor Processes and Distillation Operations in the Synthetic Organic Chemical Manufacturing Industry (SOCMI)			
Section 2147 ...	Limiting VOC Emissions from SOCMI Reactor Process and Distillation Operations.	Apr. 1995, LR21:380	12/02/97, 62 FR 63658	Ref 52.999(c)(74)
Subchapter K ..	Limiting Volatile Organic Compound Emissions from Batch Processing			
Section 2149 ...	Limiting Volatile Organic Compound Emissions from Batch Processing.	Apr. 1995, LR21:387	12/02/97, 62 FR 63658	Ref 52.999(c)(74)
Subchapter L ..	Limiting Volatile Organic Compound Emissions from Cleanup Solvent Processing			
Section 2151 ...	Limiting Volatile Organic Compound Emissions from Cleanup Solvent Processing.	Apr. 1995, LR21:391	12/02/97, 62 FR 63658	Ref 52.999(c)(74)
Subchapter M	Limiting Volatile Organic Compound Emissions from Industrial Wastewater			

EPA APPROVED LOUISIANA REGULATIONS IN THE LOUISIANA SIP—Continued

State citation	Title/subject	State approval date	EPA approval date	Comments
Section 2153	Limiting Volatile Organic Compound Emissions from Industrial Wastewater.	May, 1999, LR 25:850	06/20/02, 67 FR 41842	
Table 8	Untitled [List of Synthetic Organic Chemicals].	Dec. 1987, LR13:741	05/05/94, 59 FR 23166	Ref 52.999(c) (49) and (60). Table approved at (c)(49) included CAS numbers. Table approved at (c)(60) did not include CAS numbers
Chapter 22—Control of Emissions of Nitrogen Oxides (NO_X)				
Section 2201—Affected Facilities in the Baton Rouge Nonattainment Area and the Region of Influence				
Subsection A ..	Applicability	Feb. 27, 2002 July 25, 2002.	09/27/02, 67 FR 60885	
Subsection B ..	Definitions	Feb. 27, 2002 July 25, 2002.	09/27/02, 67 FR 60885	
Subsection C ..	Exemptions	Feb. 27, 2002 July 25, 2002.	09/27/02, 67 FR 60885	
Subsection D ..	Emission Factors	Feb. 27, 2002 July 25, 2002.	09/27/02, 67 FR 60885	Cutoff size for lean burn engines lowered to 320 Hp on July 25, 2002, for the ozone nonattainment parishes. Cutoff size for lean burn engines in the Region of Influence is 1500 Hp.
Subsection E ..	Alternative Plans	Feb. 27, 2002 July 25, 2002.	09/27/02, 67 FR 60885	
Subsection F ...	Permits	Feb. 27, 2002 July 25, 2002.	09/27/02, 67 FR 60885	
Subsection G ..	Initial Demonstration of Compliance	Feb. 27, 2002 July 25, 2002.	09/27/02, 67 FR 60885	
Subsection H ..	Continuous Demonstration of Compliance.	Feb. 27, 2002 July 25, 2002.	09/27/02, 67 FR 60885	
Subsection I	Notification, Recordkeeping, and Reporting Requirements.	Feb. 27, 2002 July 25, 2002.	09/27/02, 67 FR 60885	
Subsection J ...	Effective Dates	Feb. 27, 2002 July 25, 2002.	09/27/02, 67 FR 60885	
Chapter 23—Control of Emissions from Specific Industries				
Subchapter A ..	Chemical Woodpulping Industry			
Section 2301 ...	Control of Emissions from the Chemical Woodpulping Industry.	Dec. 1987, LR13:741	03/08/89, 54 FR 09795	Ref 52.999(c)(49)
Subchapter B ..	Aluminum Plants			
Section 2303 ...	Standards for Horizontal Stud Soderberg Primary Aluminum Plants and Prebake Primary Aluminum Plants.	Dec. 1987, LR13:741	03/08/89, 54 FR 09795	Ref 52.999(c)(49)
Subchapter C ..	Phosphate Fertilizer Plants			
Section 2305 ...	Fluoride Emissions Standards for Phosphate Fertilizer Plants.	Dec. 1987, LR13:741	03/08/89, 54 FR 09795	Ref 52.999(c)(49)
Subchapter D ..	Emission Standards for the Nitric Acid Industry			
Section 2307 ...	Emission Standards for the Nitric Acid Industry.	Dec. 1987, LR13:741	03/08/89, 54 FR 09795	Ref 52.999(c)(49)

EPA APPROVED LOUISIANA REGULATIONS IN THE LOUISIANA SIP—Continued

State citation	Title/subject	State approval date	EPA approval date	Comments
Chapter 56—Prevention of Air Pollution Emergency Episodes				
Section 5601 ...	Purpose	Dec. 1987, LR13:741	03/08/89, 54 FR 09795	Ref 52.999(c)(49)
Section 5603 ...	Scope	Dec. 1987, LR13:741	03/08/89, 54 FR 09795	Ref 52.999(c)(49)
Section 5605 ...	Episode Criteria and Air Pollution Forecast.	Dec. 1987, LR13:741	03/08/89 54 FR 09795	Ref 52.999(c)(49)
Section 5607 ...	Administrative Authority Will Determine When Criteria Level Has Been Reached.	Dec. 1987, LR13:741	03/08/89, 54 FR 09795	Ref 52.999(c)(49)
Section 5609 ...	Preplanning Strategies Required: Alert Level, Warning Level, and Emergency Level.	Jun. 1988, LR14:348	06/15/89, 54 FR 25451	Ref 52.999(c)(50)
Section 5611 ...	Standby Plans to be Submitted When Requested by Administrative Authority.	Dec. 1987, LR13:741	03/08/89, 54 FR 09795	Ref 52.999(c)(49)
Table 5	Emission Reduction Plans—Alert Level.	Dec. 1987, LR13:741	03/08/89, 54 FR 09795	Ref 52.999(c)(49)
Table 6	Emission Reduction Plans—Warning Level.	Dec. 1987, LR13:741	03/08/89, 54 FR 09795	Ref 52.999(c)(49)
Table 7	Emission Reduction Plans—Emergency Level.	Dec. 1987, LR13:741	03/08/89, 54 FR 09795	Ref 52.999(c)(49)
Chapter 60—Test Methods—NSPS Division's Source Test Manual				
6001 to 6089 ..	40 CFR 60, Appendix A NSPS Methods 1 to 41.	Dec. 1987, LR13:741	03/08/89, 54 FR 09795	Ref 52.999(c)(49)
Chapter 61—Divisions Source Test Method				
Subchapter A ..	Method 43—Capture Efficiency Test Procedures			
Section 6121 ...	Principle	Jul. 1991, LR17:653	05/05/94, 59 FR 23166	Ref 52.999(c)(60)
Section 6123 ...	Definitions	Jul. 1991, LR17:653	05/05/94, 59 FR 23166	Ref 52.999(c)(60)
Section 6125 ...	Applicability	Jul. 1991, LR17:653	05/05/94, 59 FR 23166	Ref 52.999(c)(60)
Section 6127 ...	Specific Requirements	Jul. 1991, LR17:653	05/05/94, 59 FR 23166	Ref 52.999(c)(60)
Section 6129 ...	Recording and Reporting	Jul. 1991, LR17:653	05/05/94, 59 FR 23166	Ref 52.999(c)(60)
Section 6131 ...	Procedures for Method 43	Jul. 1991, LR17:653	05/05/94, 59 FR 23166	Ref 52.999(c)(60)
6131.A	Procedure F.1—Fugitive VOC Emissions from Temporary Enclosures.	Jul. 1991, LR17:653	05/05/94, 59 FR 23166	Ref 52.999(c)(60)
6131.B	Procedure F.2—Fugitive VOC Emissions from Building Enclosures.	Jul. 1991, LR17:653	05/05/94, 59 FR 23166	Ref 52.999(c)(60)
6131.C	Procedure G.1—Captured VOC Emissions.	Jul. 1991, LR17:653	05/05/94, 59 FR 23166	Ref 52.999(c)(60)
6131.D	Procedure G.2—Captured VOC Emissions (Dilution Technique).	Jul. 1991, LR17:653	05/05/94, 59 FR 23166	Ref 52.999(c)(60)
6131.E	Procedure L—VOC Input	Jul. 1991, LR17:653	05/05/94, 59 FR 23166	Ref 52.999(c)(60)
6131.F	Procedure T—Criteria for Verification of a Permanent or Temporary Total Enclosure.	Jul. 1991, LR17:653	05/05/94, 59 FR 23166	Ref 52.999(c)(60)
Chapter 63—Test Methods—LESHAP Division's Source Test Manual				
6301 to 6401 ..	40 CFR 61, Appendix B Test Methods.	Dec. 1987, LR13:741	03/08/89, 54 FR 09795	Ref 52.999(c)(49)
Chapter 65—Rules and Regulations for the Fee System of the Air Quality Control Programs				
Section 6501 ...	Scope and Purpose	Dec. 1987, LR13:741	03/08/89, 54 FR 09795	Ref 52.999(c)(49)
Section 6503 ...	Authority	Dec. 1987, LR13:741	03/08/89, 54 FR 09795	Ref 52.999(c)(49)
Section 6505 ...	Definitions	Dec. 1987, LR13:741	03/08/89, 54 FR 09795	Ref 52.999(c)(49)
Section 6507 ...	Application Fees	Dec. 1987, LR13:741	03/08/89, 54 FR 09795	Ref 52.999(c)(49)
Section 6509 ...	Annual Fees	Dec. 1987, LR13:741	03/08/89, 54 FR 09795	Ref 52.999(c)(49)
Section 6511 ...	Methodology	Dec. 1987, LR13:741	03/08/89, 54 FR 09795	Ref 52.999(c)(49)
Section 6513 ...	Determination of Fee	Dec. 1987, LR13:741	03/08/89, 54 FR 09795	Ref 52.999(c)(49)
Section 6515 ...	Method of Payment	Dec. 1987, LR13:741	03/08/89, 54 FR 09795	Ref 52.999(c)(49)
Section 6517 ...	Late Payment	Dec. 1987, LR13:741	03/08/89, 54 FR 09795	Ref 52.999(c)(49)
Section 6519 ...	Failure to Pay	Dec. 1987, LR13:741	03/08/89, 54 FR 09795	Ref 52.999(c)(49)
Section 6521 ...	Effective Date	Dec. 1987, LR13:741	03/08/89, 54 FR 09795	Ref 52.999(c)(49)
Section 6523 ...	Fee Schedule Listing	Nov. 1992, LR18:1256	03/25/94, 59 FR 14114	Ref 52.999(c)(61).

EPA APPROVED LOUISIANA REGULATIONS IN THE LOUISIANA SIP—Continued

State citation	Title/subject	State approval date	EPA approval date	Comments
	LAC Title 55. Part III. Motor Vehicles, Chapter 8. Motor Vehicle Inspections			
	Subchapter A. General			
Section 801	Definitions	Dec. 1999, LR 25:2421	09/26/02, 67 FR 60594	
Section 803	Forward	Dec. 1999, LR 25:2421	09/26/02, 67 FR 60594	
	Subchapter B. Safety Inspections			
Section 805	Requirements, Duties, Responsibilities.	Dec. 2001, LR 27:2260	09/26/02, 67 FR 60594	
Section 807	Operation as an Official Motor Vehicle Inspection Station.	Dec. 2001, LR 27:2260	09/26/02, 67 FR 60594	
Section 809	General Inspection Requirements ..	Dec. 1999, LR 25:2426	09/26/02, 67 FR 60594	
Section 811	Inspection Procedures	Dec. 1999, LR 25:2427	09/26/02, 67 FR 60594	
Section 813	Required Equipment	Dec. 1999, LR 25:2428	09/26/02, 67 FR 60594	
Section 815	Miscellaneous Inspection Procedures.	Dec. 1999, LR 25:2433	09/26/02, 67 FR 60594	
	Subchapter C. Vehicle Emission Inspection and Maintenance Program			
Section 817	General Information	Dec. 1999, LR 25:2433	09/26/02, 67 FR 60594	
Section 819	Anti-tampering and Inspection and Maintenance Parameters.	Dec. 2001, LR 27:2260	09/26/02, 67 FR 60594	
	Subchapter E. Administrative and Audit Procedures			
Section 833	Investigations; Administrative Actions; Sanctions.	Dec. 2001, LR 27:2260	09/26/02, 67 FR 60594	
Section 835	Declaratory Orders and Rulings	Dec. 1999, LR 25:2442	09/26/02, 67 FR 60594	

(d) *EPA-approved State source-specific requirements.*

EPA-APPROVED LOUISIANA SOURCE-SPECIFIC REQUIREMENTS

Name of source	Permit number	State approval/effective date	EPA approval date	Comments
Lead SIP for Ethyl Corp. in Baton Rouge	Compliance order.	01/27/89	06/27/89, 54 FR 27002	Amended Compliance order dated 01/31/86. Modeling 05/27/88. State letter 01/27/89. Ref 52.999(c)(51)
Vulcan Materials Company Facility in Geiser, Ascension Parish.	1829T(M–2)	07/28/89	10/10/89, 54 FR 41444	Revision of Bubble Permit. Issued 03/24/83, amended 07/28/89. Ref 52.999(c)(52)
American Cyanamid Company Fortier Plant in Westwego, Jefferson Parish.	1896(M–2) ..	07/20/89	11/27/89, 54 FR 48743	Revision of Bubble Permit. Issued 10/17/84, amended 07/20/89. Ref 52.999(c)(53)
Vista Chemical Company Facility in Westlake, Louisiana.	1828(M–2) ..	09/25/86	02/02/90, 55 FR 03598	Bubble Permit. Submitted by Governor on 11/22/83, amended 09/25/86. Ref 52.999(c)(54)
Union Carbide Facility in Hahnville, Louisiana.	1836T(M–1)	05/05/90	07/18/90, 55 FR 29205	Revision of Bubble Permit. Submitted by Governor on 10/19/83, amended 04/23/87, revised 05/05/90. Ref 52.999(c)(55)
Dow Chemical Facility in Plaquemine, Iberville Parish.	1838T(M–2)	10/16/91	10/04/94, 59 FR 50500	Revision of Bubble Permit. Issued 7/28/83, amended 10/16/91. Ref 52.999(c)(62)
Exxon Compliance Date Extension, Baton Rouge Refinery.	N/A	09/12/97	05/11/98, 63 FR 25773	Extension of compliance date to LAC 33:III, 2103.D.4 Ref 52.999(c)(79).

EPA-APPROVED LOUISIANA SOURCE-SPECIFIC REQUIREMENTS—Continued

Name of source	Permit number	State approval/effective date	EPA approval date	Comments
Borden Chemicals and Plastics in Baton Rouge.	Reasonable Further Progress Agreed To Order.	10/24/96	07/02/99, 64 FR 35939	Submitted as part of the Baton Rouge, LA Post–1996 ROP Plan

(e) *EPA approved nonregulatory provisions and quasi-regulatory measures.*

EPA APPROVED LOUISIANA STATUTES IN THE LOUISIANA SIP

State citation	Title/subject	State approval/effective date	EPA approval date	Comments
LA. R.S. of 1950. Title 40, Chapter 12. The Louisiana Air Control Law, Part 1, Louisiana Air Control Commission				
40:2201	Citation	Apr. 1979	02/14/80, 45 FR 09909	Ref 52.999(c)(15)
40:2202	Definition	Apr. 1979	02/14/80, 45 FR 09909	Ref 52.999(c)(15)
40:2203	Commission created; domicile; membership; tenure; meetings.	Apr. 1979	02/14/80, 45 FR 09909	Ref 52.999(c)(15)
40:2204	Powers and Duties of Commission	Apr. 1979	02/14/80, 45 FR 09909	Ref 52.999(c)(15)
40:2205	Powers and Duties of Technical Secretary	Apr. 1979	02/14/80, 45 FR 09909	Ref 52.999(c)(15)
40:2206	Approval of rules and regulations; public hearings; difference.	Apr. 1979	02/14/80, 45 FR 09909	Ref 52.999(c)(15)
40:2207	Validity of rules or regulations; declaratory judgement.	Apr. 1979	02/14/80, 45 FR 09909	Ref 52.999(c)(15)
40:2208	Investigations; complaints; hearings; recommendations.	Apr. 1979	02/14/80, 45 FR 09909	Ref 52.999(c)(15)
40:2209	Procedure at hearings	Apr. 1979	02/14/80, 45 FR 09909	Ref 52.999(c)(15)
40:1077	Secret processes or methods as confidential	01/01/80	06/09/82, 47 FR 25013	Ref 52.999(c)(39) Old section name 2210
40:2211	Variances	Apr. 1979	02/14/80, 45 FR 09909	Ref 52.999(c)(15)
40:2212	Failure to act on petition for variance	Apr. 1979	02/14/80, 45 FR 09909	Ref 52.999(c)(15)
40:2213	Judicial review	Apr. 1979	02/14/80, 45 FR 09909	Ref 52.999(c)(15)
40:2214	Injunction; penalties for violations of orders of the commission.	Apr. 1979	02/14/80, 45 FR 09909	Ref 52.999(c)(15)
40:2215	Actions inuring to benefit the state	Apr. 1979	02/14/80 45 FR 09909	Ref 52.999(c)(15)
40:2216	Act as exclusive means of control; nuisances	Apr. 1979	02/14/80, 45 FR 09909	Ref 52.999(c)(15)
LA. R.S. of 1992. Title 30 and 36, Subtitle II. Environmental Quality, Chapter 3. Louisiana Air Control Law				
30:2060 N.6	Toxic air pollution emission control program	10/22/92	06/23/94, 59 FR 32359	Ref 52.999(c)(63)
30:2061	Small Business Stationary Source Technical and Environmental Compliance Assistance Program.	10/22/92	06/23/94, 59 FR 32359	Ref 52.999(c)(63)
30:2062	Louisiana Small Business Compliance Advisory panel.	10/22/92	06/23/94, 59 FR 32359	Ref 52.999(c)(63)
36:239(H)	Transfer of agencies and functions to the Department of Environmental Quality.	10/22/92	06/23/94, 59 FR 32359	Ref 52.999(c)(63).

EPA APPROVED LOUISIANA NONREGULATORY PROVISIONS AND QUASI-REGULATORY MEASURES

Name of SIP provision	Applicable geographic or nonattainment area	State submittal date/effective date	EPA approval date	Explanation
Federal Hydrocarbon Standards.	Region 106, SE LA–SE TX AQCR	03/30/73	06/22/73 38 FR 16565	Ref 52.999(c)(04)
PM Strategy	Region 106, SE LA–SE TX AQCR	01/02/73	07/19/77, 42 FR 37000	Ref 52.999(c)(06)
Air Quality Maintenance Area for PM.	Shreveport, LA	12/09/77	08/18/78, 43 FR 36628	Ref 52.999(c)(09)

EPA APPROVED LOUISIANA NONREGULATORY PROVISIONS AND QUASI-REGULATORY MEASURES—Continued

Name of SIP provision	Applicable geographic or nonattainment area	State submittal date/effective date	EPA approval date	Explanation
Air Quality Surveillance Network.	New Orleans, LA	04/03/78	01/29/79, 44 FR 05601	Ref 52.999(c)(10) Change of sampling site location
Louisiana Ozone SIP	Nonattainment areas, AQCR 022 and 106.	04/30/79	02/14/80, 45 FR 09909	Ref 52.999(c)(15) Part D requirement
Evidence of Notice and Public Hearing.	Statewide	06/20/79	02/10/82, 47 FR 06017	Ref 52.999(c)(16)
Emission Inventory	Nonattainment areas	08/28/78	02/14/80, 45 FR 09909	Ref 52.999(c)(17)
Air Quality Surveillance Network.	Statewide	01/10/80	08/06/81, 46 FR 40006	Ref 52.999(c)(20) Final Revisions to ambient monitoring
Lead SIP	Baton Rouge, LA	10/31/83	05/01/84, 49 FR 18485	Ref 52.999(c)(40)
NSR and Visibility Monitoring.	Class I Federal Areas in LA	10/14/85	06/10/86, 51 FR 20969	Ref 52.999(c)(44)
Small Business Program.	Statewide	10/22/92	06/23/94, 59 FR 32359	Ref 52.999(c)(63)
Redesignation Request and Maintenance Plan.	Pointe Coupe Parish	12/20/95	01/06/97, 61 FR 00648	Ref 52.999(c)(70)
VOC RACT Negative Declarations.	Baton Rouge nonattainment area	12/15/95	10/30/96, 61 FR 55894	Ref 52.999(c)(72)
Redesignation Request and Maintenance Plan.	Calcasieu Parish	12/20/95	05/02/97, 62 FR 24036	Ref 52.999(c)(73).
Contingency Plan	Baton Rouge, LA	12/28/01	09/26/02, 67 FR 60590	Substitute measure to replace the measure approved on 07/02/99, 64 FR 35939
Clean Fuel Fleet Program Substitution.	Baton Rouge, LA	03/21/99	07/19/99 64 FR 38580	Substituted above RACT VOC emission reductions from storage tank rule LAC 33:III.2103
Attainment Demonstration for the 1-Hour Ozone NAAQS.	Baton Rouge, LA	12/31/2001	10/02/02, 67 FR 61786	
Ozone Attainment Date Extension to 11/15/05.	Baton Rouge, LA	12/31/2001	10/02/02, 67 FR 61786	
2005 Motor Vehicle Emissions Budgets.	Baton Rouge, LA	12/31/2001	10/02/02, 67 FR 61786	
Enforceable Transportation Control Measure Appendix F.	Baton Rouge, LA	12/31/2001	10/02/02, 67 FR 61786	
Enforceable commitment to perform a mid-course review and submit a SIP and revision by 05/01/04.	Baton Rouge, LA	12/31/2001	10/02/02, 67 FR 61786	
Post 1996 Rate of Progress Plan Revisions.	Baton Rouge, LA	12/31/2001	10/02/02, 67 FR 61786	
15% Rate of Progress Plan Revisions.	Baton Rouge, LA	12/31/2001	10/02/02, 67 FR 61786	
1990 VOC Base Year Inventory Revisions.	Baton Rouge, LA	12/31/2001	10/02/02, 67 FR 61786	
Reasonable Available Control Measure Analysis.	Baton Rouge, LA	12/31/2001	10/02/02, 67 FR 61786	

[63 FR 63183, Nov. 12, 1998, as amended at 64 FR 415, Jan. 5, 1999; 64 FR 35939, July 2, 1999; 64 FR 38580, July 19, 1999; 64 FR 72938, Dec. 29, 1999; 66 FR 29493, May 31, 2001; 67 FR 41842, June 20, 2002; 67 FR 60593, 60595, Sept. 26, 2002; 67 FR 60877, 60885, Sept. 27, 2002; 67 FR 61270, Sept. 30, 2002; 67 FR 61801, Oct. 2, 2002]

§ 52.971 Classification of regions.

The Louisiana plan was evaluated on the basis of the following classifications:

Air quality control region	Pollutant				
	Particulate matter	Sulfur oxides	Nitrogen dioxide	Carbon monoxide	Ozone
Southern Louisiana-Southeast Texas Interstate	II	I	III	III	I
Shreveport-Texarkana-Tyler Interstate	II	III	III	III	III
Monroe-El Dorado Interstate	II	III	III	III	III

[37 FR 10869, May 31, 1972, as amended at 45 FR 9909, Feb. 14, 1980]

§§ 52.972–52.974 [Reserved]

§ 52.975 Redesignations and maintenance plans; ozone.

(a) *Approval.* The Louisiana Department of Environmental Quality (LDEQ) submitted redesignation requests and maintenance plans for the areas of Beauregard, Lafourche, and St. Mary Parishes on June 14, 1993. Redesignation requests and maintenance plans were submitted for the areas of Grant and Lafayette on May 25, 1993. The EPA deemed these requests complete on September 10, 1993. Several approvability issues existed, however. The LDEQ addressed these approvability issues in supplemental ozone redesignation requests and revised maintenance plans. These supplemental submittals were received for the areas of Beauregard, Grant, Lafayette, Lafourche, and St. Mary Parishes on March 27, 1995, December 12, 1994, October 21, 1994, November 18, 1994, and November 23, 1994, respectively. The redesignation requests and maintenance plans meet the redesignation requirements in section 107(d)(3)(E) of the Act as amended in 1990. The redesignations meet the Federal requirements of section 182(a)(1) of the Clean Air Act as a revision to the Louisiana ozone State Implementation Plan for these areas. The EPA therefore approved the request for redesignation to attainment with respect to ozone for the areas of Beauregard, Grant, Lafayette, Lafourche, and St. Mary Parishes on October 17, 1995.

(b) Approval—The Louisiana Department of Environmental Quality (LDEQ) submitted a redesignation request and maintenance plan for St. James Parish on May 25, 1993. The EPA deemed this request complete on September 10, 1993. Several approvability issues existed, however. The LDEQ addressed these approvability issues in a supplemental ozone redesignation request and revised maintenance plan. This supplemental submittal was received for St. James Parish on December 15, 1994. The redesignation request and maintenance plan meet the redesignation requirements in section 107(d)(3)(E) of the Act as amended in 1990. The redesignation meets the Federal requirements of section 182(a)(1) of the Clean Air Act as a revision to the Louisiana ozone State Implementation Plan for this parish. The EPA therefore approved the request for redesignation to attainment with respect to ozone for St. James Parish on November 13, 1995.

(c) Approval—The Louisiana Department of Environmental Quality (LDEQ) submitted a redesignation request and maintenance plan for the New Orleans CMSA on April 23, 1993. The EPA deemed this request complete on September 10, 1993. Several approvability issues existed, however. The LDEQ addressed these approvability issues in a supplemental ozone redesignation request and revised maintenance plan. This supplemental submittal was received on October 14, 1994. The redesignation request and maintenance plans meet the redesignation requirements in section 107(d)(3)(E) of

the Act as amended in 1990. The redesignation meets the Federal requirements of section 182(a)(1) of the Clean Air Act as a revision to the Louisiana ozone State Implementation Plan for Jefferson, Orleans, St. Bernard, and St. Charles Parishes. The EPA therefore approved the request for redesignation to attainment with respect to ozone for 7Jefferson, Orleans, St. Bernard, and St. Charles Parishes on December 1, 1995.

(d) Approval—The Louisiana Department of Environmental Quality submitted a redesignation request and maintenance plan for Pointe Coupee Parish on December 20, 1995. The redesignation request and maintenance plan meet the redesignation requirements in section 107(d)(3)(E) of the Act as amended in 1990. The redesignation meets the Federal requirements of section 182(a)(1) of the Clean Air Act as a revision to the Louisiana ozone State Implementation Plan for Pointe Coupee Parish. The EPA therefore approved the request for redesignation to attainment with respect to ozone for Pointe Coupee Parish on December 20, 1996.

(e) Approval—The Louisiana Department of Environmental Quality submitted a redesignation request and maintenance plan for Calcasieu Parish on December 20, 1995. The redesignation request and maintenance plan meet the redesignation requirements in section 107(d)(3)(E) of the Act. The redesignation meets the Federal requirements of section 182(a)(1) of the Act as a revision to the Louisiana ozone State Implementation Plan for Calcasieu Parish. The EPA therefore approved the request for redesignation to attainment with respect to ozone for Calcasieu Parish on June 2, 1997.

(f) Approval—The Louisiana Department of Environmental Quality (LDEQ) submitted minimal maintenance plans for Lafourche Parish on November 18, 1994. The LDEQ submitted a redesignation request on August 9, 2000. The maintenance plans meet the redesignation requirements in section 107(d)(3)(E) of the Act as amended in 1990. The redesignation meets the Federal requirements of section 182(a)(1) of the Clean Air Act as a revision to the Louisiana ozone State Implementation Plan for Lafourche Parish.

(g) Approval—The Louisiana Department of Environmental Quality (LDEQ) submitted to the EPA a request on December 4, 2000, to revise the Louisiana SIP for Beauregard, St. Mary, Lafayette, and Grant Parishes and the New Orleans Consolidated Metropolitan Statistical Area ozone maintenance area. The revision involves changes to the approved contingency plans. The contingency measures and the schedule for implementation satisfy the requirements of section 175A(d) of the Act. The EPA therefore approved this request on June 20, 2003.

[60 FR 43025, Aug. 18, 1995, as amended at 60 FR 47285, Sept. 12, 1995; 60 FR 51360, Oct. 2, 1995; 62 FR 652, Jan. 6, 1997; 62 FR 24038, May 2, 1997; 62 FR 64286, Dec. 5, 1997; 66 FR 66321, Dec. 26, 2001; 68 FR 19375, Apr. 21, 2003]

§ 52.976 Review of new sources and modification.

(a) Section 6.7 of Regulation 6.0 is disappoved since it could conflict with the preconstruction requirements for the prevention of significant deterioration (PSD) of air quality.

(b) Section 6.9 of Regulation 6.0 is disapproved since it could conflict with the preconstruction requirements for the prevention of significant deterioration (PSD) of air quality and the Administrator's Interpretative on Rule of December 21, 1976.

[44 FR 18491, Mar. 28, 1979, as amended at 47 FR 6017, Feb. 10, 1982]

§§ 52.977–52.985 [Reserved]

§ 52.986 Significant deterioration of air quality.

(a) The plan submitted by the Governor of Louisiana on August 14, 1984 (as adopted by the Secretary of Louisiana Department of Environmental Quality (LDEQ) on May 23, 1985), July 26, 1988 (as revised and adopted by the LDEQ on May 5, 1988), and October 26, 1990 (as revised and adopted by the LDEQ on July 20, 1990), LAC:33:III: § 509 Prevention of Significant Deterioration (PSD) and its Supplement documents, is approved as meeting the requirements of Part C, Clean Air Act for preventing significant deterioration of air quality.

(b) The requirements of sections 160 through 165 of the Clean Air Act are not met for federally designated Indian lands since the plan (specifically LAC: 33:III:509.A.1) excludes all federally recognized Indian lands from the provisions of this regulation. Therefore, the provisions of § 52.21 except paragraph (a)(1) are hereby incorporated and made a part of the applicable implementation plan, and are applicable to sources located on land under the control of Indian governing bodies.

[56 FR 20139, May 2, 1991, as amended at 68 FR 11323, Mar. 10, 2003; 68 FR 74489, Dec. 24, 2003]

§ 52.987 Control of hydrocarbon emissions.

(a) Notwithstanding any provisions to the contrary in the Louisiana Implementation Plan, the control measures listed in paragraphs (b) through (n) of this section shall be implemented in accordance with the schedule set forth below.

(b) Removal from service of a 10,000 barrel capacity crude oil storage tank at the Belcher Station of the Exxon Pipeline Company, Belcher, Louisiana, with a final compliance date of January 1, 1980. This shall result in an estimated hydrocarbon emission reduction of at least 208 tons per year.

(c) Removal from service of a 55,000 barrel capacity crude oil storage tank at the Weller Station of the Exxon Pipeline Company, near Minden, Louisiana, with a final compliance date of January 1, 1980. This shall result in an estimated hydrocarbon emission reduction of at least 263 tons per year.

(d) Installation of emission control systems on three 3,000 barrel capacity distillate storage tanks, at the Jones O'Brien Inc., Keatchie, Louisiana, with a final compliance date of January 1, 1978. This shall result in an estimated hydrocarbon emission reduction of at least 23 tons per year.

(e) Installation of emission control systems on crude oil storage tanks TK–43, TK–44, T–45 and T–49, and distillate tanks T–46 and T–50 at the Atlas Processing Company, Shreveport, Louisiana with a final compliance date of January 2, 1980. This shall result in an estimated hydrocarbon emission reduction of at least 881 tons per year.

(f) Installation of emission control systems on crude oil storage tanks TK–19–74, TK–HC–74, TK–571–74 and TK–15–74 and agreement to store only nonvolatile organic solvent in tanks TK–F2–74, TK–41–74 and TK–40–74 at the Cotton Valley Solvents Company, Cotton Valley, Louisiana with a final compliance date of January 2, 1980. This shall result in an estimated hydrocarbon emission reduction of at least 934 tons per year.

(g) Discontinue use of residue gas in pneumatic instrumentation and control systems at the Kerr-McGee Corporation, Devon Corporation, and Eason Oil Company, Calhoun Plant, Calhoun, Louisiana with a final compliance date of July 1, 1978. This shall result in an estimated hydrocarbon emission reduction of at least 21 tons per year.

(h) Discontinue use of residue gas in pneumatic instrumentation and control systems with a final compliance date of July 1, 1978, and install emission control systems on distillate storage tanks 2–7 and 2–13 with a final compliance date of January 2, 1980, at the Kerr-McGee Corp., Devon Corp., and Eason Oil Co., Dubach Plant, Dubach, Louisiana. This shall result in an estimated hydrocarbon reduction of at least 367 tons per year.

(i) Installation of emission control systems on a 37,500 barrel capacity crude oil storage tank at Cities Service Pipeline Company, Oil City, Louisiana with a final compliance date of February 1, 1980. This shall result in an estimated hydrocarbon emission reduction of at least 208 tons per year.

(j) Installation of emission control systems on a 25,000 barrel capacity crude oil storage tank at Cities Service Pipeline Company, Haynesville, Louisiana with a final compliance date of February 1, 1980. This shall result in an estimated hydrocarbon emission reduction of at least 28 tons per year.

(k) Installation of emission control systems on a 10,000 barrel capacity crude oil storage tank at Cities Service Pipeline Company, Summerfield, Louisiana with final compliance achieved in August 1977. This shall result in an estimated hydrocarbon emission reduction of at least 162 tons per year.

(l) Installation of emission control systems on a 30,000 barrel capacity crude oil storage tank at the Scurlock Oil Company, Lake End, Louisiana, with a final compliance date of January 15, 1980. This shall result in an estimated hydrocarbon emission reduction of at least 90 tons per year.

(m) Installation of emission control systems on a 55,000 barrel capacity crude oil storage tank at the Scurlock Oil Company, Dutchtown Oil Field near Minden, Louisiana, with a final compliance date of January 15, 1980. This shall result in an estimated hydrocarbon emission reduction of at least 186 tons per year.

(n) Installation of emission control systems on distillate storage tank No. 414 with a final compliance date of September 1, 1979, and the removal from service of tank No. 450 with final compliance achieved on December 1, 1977, at the Texas Eastern Products Pipeline Company, Sarepta, Louisiana. This shall result in an estimated hydrocarbon emission reduction of at least 355 tons per year.

[44 FR 15705, Mar. 15, 1979]

§ 52.988 [Reserved]

§ 52.990 Stack height regulations.

The State of Louisiana has committed to submit to EPA a SIP revision whenever a new or revised emission limitation for a specific source exceeds the height allowed by Section 921(A) "Good Engineering Practice (GEP) Stack Height 1 or 2" of the State regulations. A letter from the Secretary of Louisiana Department of Environmental Quality, dated September 23, 1986, stated that:

> In specific, the State regulation, Section 17.14.2 [now LAC 33: Part III, Section 921(B)], provides that the degree of emission limitation required of any source for control of any air pollutant must not be affected by so much of any source's stack height that exceeds good engineering practice or by any other dispersion technique. In reference to this requirement, the Louisiana Department of Environmental Quality or the Administrative Authority will submit to EPA a SIP revision whenever the Louisiana Department of Environmental Quality adopts a new or revised emission limitation for a specific source that is based on a stack height that exceeds the height allowed by Section 17.14.1(e)(1) [now LAC 33: Part III, Section 921(A) "Good Engineering Practice (GEP) Stack Height 1"] or Section 17.14.1(e)(2) [now LAC 33: Part III, Section 921(A) "Good Engineering Practice (GEP) Stack Height 2"].

[53 FR 36010, Sept. 16, 1988]

§ 52.991 Small business assistance program.

The Governor of Louisiana submitted on October 22, 1992, a plan revision to develop and implement a Small Business Stationary Source Technical and Environmental Compliance Assistance Program to meet the requirements of section 507 of the Clean Air Act by November 15, 1994. The plan commits to provide technical and compliance assistance to small businesses, hire an Ombudsman to serve as an independent advocate for small businesses, and establish a Compliance Advisory Panel to advise the program and report to EPA on the program's effectiveness.

[59 FR 32360, June 23, 1994]

§ 52.992 Area-wide nitrogen oxides exemptions.

(a) The Louisiana Department of Environmental Quality submitted to the EPA on August 5, 1994, a petition requesting that the nonclassifiable ozone nonattainment areas in the State of Louisiana be exempted from the requirement to meet the NO_X provisions of the Federal transportation conformity rule. The exemption request was based on monitoring data which demonstrated that the National Ambient Air Quality Standard for ozone had been attained in this area for the 3 years prior to the petition. The parishes for which the NO_X exemption was requested include: Beauregard, Grant, Lafayette, Lafourche, Jefferson, Orleans, St. Bernard, St. Charles, St. James, and St. Mary. The EPA approved this exemption request on March 2, 1995.

(b) The LDEQ submitted to the EPA on November 17, 1994, a petition requesting that the Baton Rouge serious ozone nonattainment area be exempted from the NO_X control requirements of the CAA. In addition, supplemental information was submitted to the EPA by the LDEQ on January 26, 1995, June 6, 1995, and June 16, 1995. The Baton Rouge nonattainment area consists of

East Baton Rouge, West Baton Rouge, Pointe Coupee, Livingston, Iberville, and Ascension Parishes. The exemption request was based on photochemical grid modeling which shows that reductions in NO_X would not contribute to attainment in the nonattainment area. On January 18, 1996, the EPA approved the State's request for an areawide exemption from the following requirements: NO_X new source review, NO_X reasonably available control technology, NO_X general conformity, and NO_X inspection and maintenance requirements.

(c) The LDEQ submitted to the EPA on July 25, 1995, a revision to the SIP, pursuant to section 182(b)(1), requesting that the Baton Rouge serious ozone nonattainment area be exempted from the transportation conformity NO_X requirements of the CAA. The Baton Rouge nonattainment area consists of East Baton Rouge, West Baton Rouge, Pointe Coupee, Livingston, Iberville, and Ascension Parishes. The exemption request was based on photochemical grid modeling which shows that additional reductions in NO_X would not contribute to attainment in the nonattainment area. On February 12, 1996, the EPA approved the State's request for an areawide exemption from the transportation conformity NO_X requirements.

(d) The LDEQ submitted to the EPA on October 28, 1994, a petition requesting that the Lake Charles marginal ozone nonattainment area be exempted from the NO_X control requirements of the Act. The Lake Charles nonattainment area consists of Calcasieu Parish. The exemption request was based on photochemical grid modeling which shows that reductions in NO_X would not contribute to attainment in the nonattainment area. On May 27, 1997, the EPA approved the State's request for an area-wide exemption from the following requirements: NO_X new source review, NO_X general conformity, and NO_X transportation conformity requirements. The waiver was granted on the basis of modeling, and ambient air quality data demonstrating the area has attained the ozone NAAQS.

(e) On September 24, 2001, and on December 31, 2001, the LDEQ requested that EPA rescind the Baton Rouge section 182(f) and 182(b)(1) NO_X exemptions that were approved by EPA, and published in the FEDERAL REGISTER on January 26, 1996 (61 FR 2438), and February 27, 1996 (61 FR 7218). The State based its request on photochemical grid modeling recently performed for the Baton Rouge State Implementation Plan (SIP) which indicates that controlling NO_X sources will assist in bringing the Baton Rouge area into attainment with the National Ambient Air Quality Standard (NAAQS) for ozone. On May 7, 2002, EPA proposed approval of the State's request to rescind both NO_X exemptions. Based on our review of the State's request and the supporting photochemical grid modeling the NO_X exemptions are rescinded on May 5, 2003.

[60 FR 5864, Jan. 31, 1995, as amended at 61 FR 2446, Jan. 26, 1996; 61 FR 7221, Feb. 27, 1996; 62 FR 29078, May 29, 1997; 68 FR 23604, May 5, 2003]

§ 52.993 Emissions inventories.

(a) The Governor of the State of Louisiana submitted the 1990 base year emission inventories for the Baton Rouge (BTR) and Calcasieu Parish (CAL) ozone nonattainment areas on November 16, 1992 as a revision to the State Implementation Plan (SIP). The 1990 base year emission inventory requirement of section 182(a)(1) of the Clean Air Act, as amended in 1990, has been satisfied for each of these areas.

(b) The inventories are for the ozone precursors which are volatile organic compounds, nitrogen oxides, and carbon monoxide. The inventories cover point, area, non-road mobile, on-road mobile, and biogenic sources.

(c) The BTR nonattainment area is classified as Serious and includes Ascension, East Baton Rouge, Iberville, Livingston, Point Coupee, and West Baton Rouge Parishes; the CAL nonattainment area is classified as Marginal and includes Calcasieu Parish.

(d) On December 15, 1995, the Governor of the State of Louisiana submitted a revision to the 1990 base year volatile organic compound (VOC) emissions inventory for the Baton Rouge, Louisiana ozone nonattainment area. The revised inventory was submitted as part of the revised Baton Rouge 15

Percent Rate-of-Progress Plan. This revision to the base year inventory modified the point source VOC emissions. The revisions satisfy the requirements of section 182(a)(1) of the Clean Air Act, as amended in 1990.

(e) On January 2, 1997, the Governor of the State of Louisiana submitted a revision to the 1990 base year volatile organic compound (VOC) emissions inventory for the Baton Rouge, Louisiana ozone nonattainment area. The revised inventory was submitted as part of the revised Baton Rouge Post–1996 Rate-of-Progress Plan. This revision to the base year inventory modified the point, area, non-road mobile, on-road mobile, and biogenic sources of VOC emissions. The revisions satisfy the requirements of section 182(a)(1) of the Clean Air Act, as amended in 1990.

[60 FR 13911, Mar. 15, 1995, as amended at 64 FR 35941, July 2, 1999]

§ 52.994 [Reserved]

§ 52.995 Enhanced ambient air quality monitoring.

(a) The Governor of the State of Louisiana submitted the photochemical assessment monitoring stations (PAMS) State Implementation Plan (SIP) revision for the Baton Rouge ozone nonattainment area on September 10, 1993. This SIP submittal satisfies 40 CFR 58.20(f), which requires the State to provide for the establishment and maintenance of PAMS.

(b) The Baton Rouge ozone nonattainment area is classified as Serious and includes Ascension, East Baton Rouge, Iberville, Livingston, Pointe Coupee, and West Baton Rouge Parishes.

[61 FR 31037, June 19, 1996]

§ 52.996 Disapprovals.

The State of Louisiana motor vehicle Inspection and Maintenance (I/M) program SIP submittal of August 18, 1995, with later editions, is disapproved based on the failure of the State Legislature to grant legal authority to reauthorize and continuously operate the program until the program is no longer necessary. The Baton Rouge serious ozone nonattainment area is required to have an enhanced I/M program under section 182 of the Clean Air Act (the Act) as amended in 1990. This disapproval initiates the sanction process of section 179(a) of the Act.

[62 FR 61634, Nov. 19, 1997; 63 FR 4397, Jan. 29, 1998]

§ 52.999 Original identification of plan section.

(a) This section identifies the original "The Louisiana Air Control Commission Implementation Plan" and all revisions submitted by Louisiana that were federally approved prior to July 1, 1998.

(b) The plan was officially submitted on January 28, 1972.

(c) The plan revisions listed below were submitted on the dates specified.

(1) Certification that public hearings were held on the State's implementation plan was submitted on February 28, 1972. (Non-regulatory)

(2) Response to comments by Region VI on the plan was transmitted by the Louisiana Air Control Commission on May 8, 1972. (Non-regulatory)

(3) Revisions to Louisiana Air Control Regulations 6, 8, 18, 19, 22, A22, 27, 28, control strategy for photochemical oxidants-hydrocarbons, prevention of air pollution emergency episodes, source surveillance, and procedures for submission and approval and compliance schedules were submitted by the Governor on July 17, 1972.

(4) Revisions concerning the control strategy for photochemical oxidants and hydrocarbon for Region 106 was submitted by the Governor on March 30, 1973. (Regulatory)

(5) Revision of Section 6.1 of the State air control regulations was submitted by the Governor on April 25, 1973.

(6) A revision concerning the control strategy for particulate matter for the Southern Louisiana-Southeast Texas AQCR was submitted by the Governor on January 2, 1973.

(7) Variances to Emission Limiting Regulations adopted by the Louisiana Air Control Commission on October 29, 1975, December 12, 1975, and April 6, 1976, and submitted by the Governor on April 22, 1976.

(8) Commission Orders creditable as emission offsets for the GM Plant in

Shreveport were submitted by the Governor on January 25, 1978 as amendments to the Louisiana State Implementation Plan.

(9) A proposed dedesignation of the Shreveport area as an AQMA for particulate matter was submitted by the Governor on December 9, 1977.

(10) An administrative revision of the Air Quality Surveillance Network was submitted by the Louisiana Air Control Commission on April 3, 1978. (Non regulatory)

(11) Revisions to Regulation 19.0, Emission Standards for Particulate Matter, as adopted on November 30, 1977, were submitted by the Governor on December 9, 1977.

(12) Minor changes and administrative revisions to regulations 2.0, 3.0, 4.0, 5.0, 6.0, 7.0, 8.0, 9.0, 10.0, 11.0, 12.0, 13.0, 14.0, 15.0, 16.0, and 17.0 of the Louisiana SIP were submitted by the Governor on December 9, 1977.

(13) A variance to Regulation 19.5 for Kaiser Aluminum & Chemical Corporation at Norco, Louisiana was submitted by the Governor on August 31, 1978.

(14) Revisions to the Air Control Regulations 18.1, 18.3, 18.5, 18.6–18.6.2, 18.7, 20.1–20.8, 21.1–21.6.4, 23.0–23.4.2, 24.1–24.5, 24.6.2, 24.7–24.7.3, 24.8, 25.0–25.6.2, 26.0–26.2, 26.4–26.8.2, 27.0–27.5.4, 28.0–28.6.2 and 30.0, as adopted by the Louisiana Air Control Commission on November 30, 1977, were submitted by the Governor on December 9, 1977.

(15) Revisions to the plan for attainment of standards for ozone (Part D requirements) were submitted by the Governor on April 30, 1979.

(16) Evidence of notice and public hearing for the April 30, 1979 plan was submitted by the Governor on June 20, 1979.

(17) Emission inventory information, emission reduction information, a certification of the lack of major degreasing sources, and a commitment to adopt future regulations were submitted by the Louisiana Air Control Commission on August 28, 1979 (non-regulatory).

(18) Schedule for the modification and submittal of regulations 22.6 and regulation 6.3.8 were submitted by the Louisiana Air Control Commission on October 11, 1979 (non-regulatory).

(19) Regulations 22.17 and 22.18, adopted by the Louisiana Air Control Commission on September 25, 1979 were submitted by the Governor on October 18, 1979.

(20) On January 10, 1980, the Governor submitted final revisions to the ambient monitoring portion of the plan.

(21) Revised Regulation 22.8(c) was submitted by the Governor on June 20, 1979. This regulation was adopted by the Louisiana Air Control Commission on March 27, 1979.

(22) Revised Regulation 22.5 was submitted by the Governor on April 30, 1979. This regulation was adopted by the Louisiana Air Control Commission on March 27, 1979. A second revision to Regulation 22.5 was submitted by the Governor on July 7, 1979, as adopted by the Louisiana Air Control Commission on June 26, 1979.

(23) Revised Regulations 6.3.8, 22.3, 22.6.1, 22.6.2, 22.10, and 22.12.4 were submitted by the Governor on December 10, 1979. These regulations were adopted by the Louisiana Air Control Commission on November 27, 1979. A second revision to Regulation 6.3.8 was submitted by the Governor on October 23, 1980. The second revision was adopted by the Louisiana Air Control Commission on September 25, 1980.

(24) Revisions to the Air Control Regulations 24.6.1 and 24.7.4, as adopted by the Louisiana Environmental Control Commission on March 27, 1979, were submitted by the Governor on April 30, 1979.

(25) Revised Regulations 22.9.2, 22.9.3(b), 22.19, 22.20, 22.21, 22.22 and 22.23 and revised Regulation 4.0 (i.e. sections 4.99 through 4.116) were adopted by the State on November 27, 1979 and submitted by the Governor on December 10, 1979; and revised Regulations 22.3 and 22.20.2 were adopted by the State on July 22, 1980 and submitted by the Governor on September 12, 1980.

(26) Revised Regulations 22.9.3(b), 22.20.3, and 22.23.7 were adopted by the State on December 11, 1980 and submitted by the Governor on January 12, 1981; revised Regulation 22.21.2(E) was adopted by the State on April 23, 1981 and submitted by the Governor on June 3, 1981; and, revised Regulation 22.19.2(B) was adopted by the State on

June 25, 1981 and submitted by the Governor on July 22, 1981.

(27) Revisions to the Air Control Regulations 6.1.1, 18.2, 18.4, 18.6.3, 19.5.1, 24.9.1, 24.9.2, 26.3.1, 26.3.2 and 51.11, as adopted by the Louisiana Environmental Control Commission on September 25, 1980, were submitted by the Governor on October 23, 1980.

(28) Revisions to the plan for permit fee systems, interstate pollution abatement, public availability of emission data, maintenance of pay, permit public comment, and public notification of exceedances of the primary national ambient air quality standards (NAAQS), were submitted by the Governor on April 30, 1979. In addition, revised submittals for permit fee schedules were submitted on July 7, 1979; September 12, 1980; October 23, 1980; and January 12, 1981. The September 12, 1980 letter also included a new § 51.285 (a), (b) and (c). Finally, the State sent a notification letter on August 7, 1979, which corrected a typographical error in the maintenance of pay revision.

(29) A revision to the Air Control Regulations 22.9.3(d) as adopted by the Louisiana Air Control Commission on December 11, 1980, was submitted by the Governor on January 12, 1981.

(30) Revisions to the Air Control Regulations 8.5.1, 22.3.1.1, 22.3.1.2, and 22.10, as adopted by the Louisiana Air Control Commission on April 23, 1981, were submitted by the Governor on June 3, 1981.

(31) A revision to the Air Control Regulation 22.9.3(a), as adopted by the Louisiana Air Control Commission on May 28, 1981, was submitted by the Governor on June 3, 1981.

(32) A revision to the Air Control Regulation 22.3.2, as adopted by the Louisiana Air Control Commission on July 23, 1981, was submitted by the Governor on August 17, 1981.

(33) The Louisiana State Implementation Plan for lead and Regulations for—the Control of Air Pollution from lead, 10.0—10.3 and 19A.0, were submitted to EPA on July 27, 1979, by the Governor of Louisiana as adopted by the Louisiana Air Control Commission on July 24, 1979. Letters of Clarification dated January 6, 1982, April 1, 1982 and May 4, 1982 also were submitted. No action is taken on the Baton Rouge area.

(34) Section 6.1 of Regulation 6.0 amended and adopted by the Louisiana Environmental Control Commission on October 22, 1981, was submitted by the Governor on November 30, 1981.

(35) Revisions to the Air Control Regulations 4.102, 4.110, 22.20.2 and 22.21.2(D), as adopted by the Louisiana Environmental Control Commission on December 11, 1980, were submitted by the Governor on January 12, 1981.

(36) [Reserved]

(37) Revisions to the Air Control Regulations 4.14, 4.36, 6.6, 22.3.1.1, and 22.3.1.2, as adopted by the Louisiana Environmental Control Commission on February 26, 1981, were submitted by the Governor on March 25, 1981.

(38) Revisions to the Air Control Regulations 17.13, 23.4.1.1 and 23.4.4, as adopted by the Louisiana Environmental Control Commission on January 28, 1982, were submitted by the Governor on February 15, 1982.

(39) A revision to section 2210 of the Louisiana Air Control Law was submitted to EPA on March 10, 1982. The Section was renamed Section 1077 of the Environmental Affairs Act, by the Louisiana Legislature, and was effective January 1, 1980.

(40) The Louisiana State Implementation Plan for lead for the Baton Rouge area was submitted on July 27, 1979, with letters of clarification and revisions dated January 4, 1983, September 15, 1983, September 30, 1983. The final lead control plan was submitted in a letter dated October 31, 1983, as adopted by the Louisiana Air Control Commission on October 20, 1983.

(41) Revisions to sections 2.3, 3.1, 3.4, and 4.1 of the Rules and Regulations for the Fee System of the Air Quality Control Program, as adopted by the Louisiana Environmental Control Commission on January 26, 1983, were submitted by the Louisiana Department of Natural Resources (now the Department of Environmental Quality), Air Quality Division, on November 17, 1983.

(42) Deletion of Air Control Regulation 14.0, and deletion of hydrocarbon guideline standard from Table 1, 1a, and 2, as adopted by the Louisiana Environmental Control Commission on

July 28, 1983, was submitted by the Governor on October 19, 1983.

(43) Revisions to the Air Control Regulation 22.22 as adopted by the Louisiana Environmental Control Commission on September 23, 1982, and submitted by the Governor on July 14, 1983.

(i) Incorporation by reference.

(A) Regulation 22.22.1(A) and 22.22.2(A) Letter dated July 14, 1983, from the State of Louisiana and which change the reference for the test methods from a CTG document to the Louisiana Air Quality Regulations Division's Source Test Manual. These regulations were adopted on September 23, 1982.

(44) On October 4, 1985, the Governor submitted a revision entitled, "Protection of Visibility for Mandatory Class I Federal Areas," July 12, 1985. This submittal included new source review and visibility monitoring strategy as adopted by the Secretary of the Louisiana Department of Environmental Quality in October 1985.

(45) On August 14, 1985, the Governor of Louisiana submitted a Prevention of Significant Deterioration (PSD) Plan including Air Quality Regulations—Part V, (sections 90.1–90.19) as adopted by the Secretary of the Department of Environmental Quality on May 23, 1985. Air Quality Regulations—Part V provides authority for the State to implement the PSD program in certain areas of the State. Letters of commitment for air quality modeling (dated September 30, 1985) and Federal stack height and dispersion technique regulation (dated June 3, 1986) were submitted by the Secretary of Louisiana Department of Environmental Quality.

(i) Incorporation by reference.

(A) Louisiana Air Quality Regulations—Part V, Prevention of Significant Deterioration of Air Quality, except that no provision of this part applies to Indian Reservations meaning any Federally recognized reservation established by Treaty, Agreement,Executive Order, or Act of Congress, as adopted on May 23, 1985.

(B) A letter from the Secretary of Louisiana Department of Environmental Quality dated September 30, 1985, which commits the Department to use only the EPA approved air quality models in accordance with the provisions of 40 CFR 51.24(1) [now 40 CFR 51.166(1)] and to submit a stack height and dispersion techniques SIP revision by April 8, 1986.

(C) A letter from the Secretary of Louisiana Department of Environmental Quality dated June 3, 1986, which certifies that the Department interprets the provisions of section 90.8 of Louisiana PSD regulations as having the same meaning as the Federal stack height and dispersion technique regulation, 40 CFR 51.1(hh)-(kk) [now 40 CFR 51.100(hh)-(kk)], promulgated by EPA in the FEDERAL REGISTER of July 8, 1985, and that the State will apply, implement, and enforce these requirements in the PSD permitting process.

(D) A narrative explanation and additional requirements entitled "Prevention of Significant Deterioration Revisions to the Louisiana State Implementation Plan".

(46) On January 6, 1988, the Governor of Louisiana submitted a revision to the State Implementation Plan (SIP) that contained Air Quality Regulations, LAC 33: Part III, Section 921, Stack Heights, as adopted by the Secretary of the Department of Environmental Quality on December 20, 1987. Section 921, Stack Heights, enables the State to ensure that the degree of emission limitation required for the control of any air pollutant under its SIP is not affected by that portion of any stack height which exceeds GEP or by any other dispersion technique.

(i) Incorporation by reference.

(A) Louisiana Air Quality Regulations—LAC 33: Part III, Section 921, Stack Heights, as adopted by the Secretary of the Department of Environmental Quality on December 20, 1987.

(ii) Other material—none.

(47) A revision exempting four rural carbon black plants—Ashland Chemical, Louisa, LA; Cabot Corporation, Centerville, LA; Cabot Corporation, Ville Platte, LA; and Columbian Chemicals, Franklin, LA—from further controls on acetylene emissions as required under Louisiana Air Quality Regulation 22.8 received from the Governor on January 12, 1987, and amended May 13, 1987.

(i) Incorporation by reference.

(A) A letter dated May 29, 1987, from Martha Madden, Secretary, Louisiana Department of Environmental Quality, to the Governor of Louisiana approving the exemptions from further controls on acetylene emissions for the four rural carbon black plants and ordering each facility to maintain its emissions at or below the levels specified in the attached summary of emissions.

(ii) Additional material.

(A) A summary of VOC emissions for each of the four rural carbon black plants exempted from further controls on acetylene emissions under Louisiana Air Quality Regulation 22.8.

(48) Part II of the Visibility Protection Plan was submitted by the Governor on October 26, 1987.

(i) Incorporation by reference.

(A) Revision entitled, "Louisiana State Implementation Plan Revision: Protection of Visibility: Proposed Part II Long-Term Strategy, October 26, 1987". This submittal includes a visibility long-term strategy and general plan provisions as approved and adopted by the Secretary of the Louisiana Department of Environmental Quality on October 26, 1987.

(B) Letter dated October 26, 1987, from Secretary of Louisiana Department of Environmental Quality (LDEQ), to the Governor approving the SIP revision.

(ii) Additional material.

(A) Letter dated June 16, 1988, from Administrator, Air Quality Division, LDEQ, to Chief, SIP/New Source Section (6T–AN), EPA Region 6, committing to make its three-year periodic review report available to the public as well as to EPA.

(49) The recodified and revised regulations of the Louisiana Administrative Code, Title 33, Part 3 (LAC:33:III) that were adopted by the State effective December 20, 1987, and submitted by the Governor by letters dated January 6, 1988, and October 4, 1988, for inclusion in the SIP. These regulations include LAC:33:III: Chapters 1, 5, 7, 9, 11, 13, 15, 17, 23, 56, 60, 63, and 65, except LAC:33:III:111 "Particulate matter," and "Suspended particulate matter," LAC:33:III:505.J, and LAC:33:III:505.L, which were previously disapproved, and LAC:33:III:6099, which was withdrawn by the Governor.

(i) Incorporation by reference. (A) Louisiana Administrative Code, Title 33, Part 3, Chapters 1, 5, 7, 9, 11, 13, 15, 17, 23, 56, 60, 63, and 65 as adopted by Louisiana Department of Environmental Quality on December 20, 1987, except LAC:33:III: section 111 "Particulate matter," "Suspended particulate matter," section 505.J, section 505.L, and section 6099.

(ii) Additional material. (A) A letter dated December 16, 1987, from Martha Madden, Secretary of the Louisiana Department of Environmental Quality, to the Governor of Louisiana, approving the codified air quality regulations effective December 20, 1987.

(50) The Louisiana State Implementation Plan for PM_{10} as submitted by the Governor in a letter dated July 26, 1988, and adopted by the State effective June 20, 1988.

(i) Incorporation by reference. (A) Revisions to the Louisiana Administrative Code, Title 33, Chapter III, Sections 111, 509.B, 509.I.8.a, 709, 1301.B, 1303.A, 1305.A., 1311.B, 1311.C, 1313.C, 1315, 1319.G, 5609.A.1, 5609.A.2, 5609.A.3, and Tables 1, 1a, and 2 of chapter 7 as adopted effective June 20, 1988.

(B) A letter dated May 22, 1989, from Mike D. McDaniel, Louisiana Department of Environmental Quality, to William B. Hathaway, U.S. Environmental Protection Agency.

(ii) Additional material.

(A) A letter dated July 26, 1988, from Paul H. Templet, Secretary, Louisiana Department of Environmental Quality, to the Governor of Louisiana approving the adoption of amendments to the Louisiana Air Quality Regulations to implement the new PM_{10} standard effective June 20, 1988.

(B) A narrative supplement to the Louisiana PM_{10} submitted by the Governor in a letter dated July 26, 1988.

(51) Revision to the Louisiana Lead State Implementation Plan (SIP) submitted by the Governor in a letter dated July 18, 1986.

(i) Incorporation by reference.

(A) An amended Compliance Order dated January 31, 1986, issued by the Secretary of the State of Louisiana Department of Environmental Quality in the matter of Ethyl Corporation, Baton Rouge, Louisiana.

(ii) Additional material.

(A) Computer modeling submitted by letter dated May 27, 1988, from Doug Walters, Louisiana Department of Environmental Quality, to Joe Winkler, U.S. Environmental Protection Agency.

(B) Explanatory letter dated January 27, 1989, from Gustave Von Bodungen, Louisiana Department of Environmental Quality, to Gerald Fontenot, U.S. Environmental Protection Agency.

(52) On October 31, 1983, the Governor submitted a request to revise the Louisiana SIP to include an Alternative Emission Reduction Plan for the Vulcan Materials Company facility located at Geismar, Ascension Parish. A permit was issued by LDEQ on March 24, 1983 (#1829T), but after several revisions, the final permit for the trade is #1829T (M–2), issued July 28, 1989. This Bubble uses credits obtained from installation of a vapor recovery system on a tank farm of five VOC storage tanks in lieu of controls on one process vent and one VOC storage tank.

(i) Incorporation by reference.

(A) LDEQ Permit number 1829T (M–2), Revision of Bubble Permit—Vulcan Chemicals Company, Geismar, Ascension Parish, Louisiana, issued July 28, 1989.

(ii) Additional material.

(A) Letter dated June 28, 1989, from the Administrator of the Louisiana Office of Air Quality, giving assurances that the State has resources and plans necessary to strive toward attainment and maintenance of the NAAQS for ozone taking into account the influence of this Bubble on air quality.

(53) On May 5, 1986, the Governor submitted a request to revise the Louisiana SIP to include an alternate Emission Reduction Plan for the American Cyanamid Company Fortier Plant located at Westwego, Jefferson Parish. A permit was issued by LDEQ on October 17, 1984 (#1896), but after several revisions, the final permit for the trade is #1896 (M–2), issued July 20, 1989. This Bubble uses credits obtained from the change of service of three storage tanks from VOC to non-VOC usage to offset reductions required by controlling one methanol storage tank.

(i) Incorporation by reference.

(A) LDEQ permit number 1896 (M–2) issued July 20, 1989, a Revision to Bubble Permit No. 1896 (M–1)—American Cyanamid Company, Westwego, Jefferson Parish, Louisiana.

(ii) Additional material.

(A) Letter dated June 6, 1989, from the Administrator of the Louisiana Office of Air Quality, giving the State position that the Volatile Organic Compounds that have been shifted out of the emission reduction credit donating tanks have not been shifted elsewhere in the nonattainment area.

(B) Letter received by EPA on March 31, 1989, from Mr. Addison Tatum of the State of Louisiana, including calculations for the permit.

(54) A revision to allow an alternative emission reduction plan ("bubble") for the Vista Chemical Company facility in Westlake, Louisiana, as submitted by the Governor on November 22, 1983, and amended by Louisiana Department of Environmental Quality Air Quality Division permit #1828 M–2 issued September 25, 1986.

(i) Incorporation by reference.

(A) Louisiana Department of Environmental Quality Air Quality Division permit #1828 M–2 issued September 25, 1986.

(ii) Additional material.—None.

(55) A revision to allow an alternative emission reduction plan ["bubble"] for the Union Carbide facility in Hahnville, Louisiana, as submitted by the Governor on October 19, 1983, and amended by Louisiana Department of Environmental Quality Air Quality Division permit #1836T(M–1) issued April 23, 1987, and revised on May 5, 1990.

(i) Incorporation by reference.

(a) Louisiana Department of Environmental Quality Air Quality Division permit #1836T(M–1) issued April 23, 1987, and revised on May 5, 1990.

(ii) Additional material.—None.

(56) Revisions to Louisiana's volatile organic compound regulations were submitted by the Governor on June 13, 1990.

(i) Incorporation by reference.

(A) Revisions to Title 33, Environmental Quality, Part III. Air, Chapter 21. Control of Emission of Volatile Organic Compounds, Subchapter B. Organic Solvents, Section 2123. Organic

Solvents, paragraphs C.6. and D.3., effective February 20, 1990.

(57) Revisions to the Louisiana State Implementation Plan for LAC:33:III: Section 509 Prevention of Significant Deterioration (PSD) sections (509)(B) (Baseline Area) (1), 509(B) (Baseline Area) (2), 509(B) (Baseline Concentration) (1), (509)(B) (Baseline Concentration) (1)(b), 509(B) (Baseline Concentration) (2)(a), 509(B) (Baseline Concentration) (2)(b), 509(B) (Baseline Date) (1)(a), 509(B) (Baseline Date) (1)(b), 509(B) (Baseline Date) (2), 509(B) (Baseline Date) (2)(a), 509(B) (Baseline Date) (2)(b), 509(B) (Net Emission Increases) (4), 509(D), and 509(P)(4), as adopted by the Secretary of Louisiana Department of Environmental Quality (LDEQ) on July 20, 1990, were submitted by the Governor on October 26, 1990.

(i) Incorporation by reference.

(A) LAG:33:III: Section 509 Prevention of Significant Deterioration Sections (509)(B) (Baseline Area) (1), 509(B) (Baseline Area) (2), 509(B) (Baseline Concentration) (1)(a), (509)(B) (Baseline Concentration) (1)(b), 509(B) (Baseline Concentration) (2)(a), 509(B) (Baseline Concentration) (2)(b), 509(B) (Baseline Date (1)(a), 509(B) (Baseline Date) (1)(b), 509(B) (Baseline Date) (2), 509(B) (Baseline Date) (2)(a), 509(B) (Baseline Date) (2)(b), 509(B) (Net Emission Increase) (4), 509(D), and 509(P)(4) as amended on July 20, 1990.

(ii) Additional material.—None.

(58) Louisiana Air Quality Regulation section 6.6 as revised and adopted by the Louisiana Environmental Control Commission on February 26, 1981, submitted by the Governor on March 25, 1981, and approved by the Environmental Protection Agency on June 9, 1982.

(i) *Incorporation by reference.* (A) Louisiana Air Quality Regulation section 6.6 as revised and adopted by the Louisiana Environmental Control Commission on February 26, 1981, submitted by the Governor on March 25, 1981, and approved by the Environmental Protection Agency on June 9, 1982.

(ii) *Additional material.* (A) Letter dated March 24, 1981, from the Secretary of the Louisiana Department of Natural Resources to the Governor of Louisiana acknowledging approval of Louisiana Air Quality Regulation section 6.6 by the Louisiana Environmental Control Commission effective on February 26, 1981.

(59) A revision to the Louisiana State Implementation Plan (SIP) to include revisions to LAC, Title 33, "Environmental Quality," Part III. Air, Chapter 15. Emission Standards for Sulfur Dioxide, effective April 20, 1992, and submitted by the Governor by cover letter dated August 5, 1992.

(i) Incorporation by reference.

(A) Revisions to LAC, Title 33, "Environmental Quality," Part III. Air, Chapter 15. Emission Standards for Sulfur Dioxide, Section 1501, "Degradation of Existing Emission Quality Restricted;" Section 1503, "Emission Limitations;" Table 4, "Emissions—Methods of Contaminant Measurement;" Section 1505, "Variances;" Section 1507, "Exceptions;" Section 1509, "Reduced Sulfur Compounds (New and Existing Sources);" Section 1511, "Continuous Emissions Monitoring;" and Section 1513, "Recordkeeping and Reporting," effective April 20, 1992.

(60) A revision to the Louisiana State Implementation plan (SIP) to include revisions to Louisiana Administrative Code (LAC), Title 33, Environmental Quality, Part III. Air, Chapter 1, Chapter 21, and Chapter 61 as submitted by the Governor on June 13, 1990, October 26, 1990, May 24, 1991, and March 24, 1992.

(i) Incorporation by reference.

(A) LAC, Title 33, Environmental Quality, Part III. Air, Chapter 21 (December 1987). Control of Emission of Organic Compounds, except section 2105. Storage of Volatile Organic Components (Small Tanks).

(B) Revisions to LAC, Title 33, Environmental Quality, Part III. Air, Chapter 1. General Provisions, section 111. Definitions–Administrator, Administrative Authority*, Attainment Areas, Nonattainment Areas, SIP, Volatile Organic Compound, and Chapter 21. Control of Emission of Organic Compounds, Subchapter A. General, section 2103. Storage of Volatile Organic Compounds paragraphs A., C., D.1., D.1.a. through D.1.d., D.2., D.2.a., D.2.b., D.3., E., F., H.1., H.2., I. effective January 20, 1990.

(C) Revisions to LAC, Title 33, Environmental Quality, Part III. Air, Chapter 21. Control of Emission of Organic Compounds Subchapter A. General, section 2107. Volatile Organic Compounds–Loading, section 2109. Oil/Water–Separation, paragraphs A.1. through A.4., B. through D., section 2113. Housekeeping, paragraphs A.1 through A.3., A.5., section 2117. Exemptions, section 2119. Variances B., and Subchapter D. Cutback Paving Asphalt section 2127. Cutback Paving Asphalt, paragraphs A., B., C.1., C.2., C.3., D., D.1., D.1.b., D.1.c., D.1.d., and D.2., effective February 20, 1990.

(D) Revisions to LAC, Title 33, Environmental Quality, Part III. Air, Chapter 21. Control of Emission of Organic Compounds, Subchapter B. Organic Solvents, section 2123. Organic Solvents, paragraphs C., C.1. through C.5., C.7. through C.9., effective February 20, 1990.

(E) Revisions to LAC, Title 33, Environmental Quality, Part III. Air, Chapter 21. Control of Emission of Organic Compounds, Subchapter F. Gasoline Handling, section 2131. Filling of Gasoline Storage Vessels, paragraphs A., B., B.1., B.3., D., D.1., D.4., D.5., E., F., and G., section 2133. Gasoline Bulk Plants paragraphs A., A.1., A.3. through A.6., B., B.3., B.4., C. and D., section 2135. Bulk Gasoline Terminals paragraphs A., B., B.1.a., B.1.a.i., B.1.a.iii., B.1.d., B.2. through B.5., and C. through E., E.1. through E.4., and section 2137. Gasoline Terminal Vapor-Tight Control Procedure. effective July 20, 1990.

(F) Revisions to LAC, Title 33, Environmental Quality, Part III. Air, Chapter 21. Control of Emission of Organic Compounds Subchapter A. General, section 2101. Compliance Schedules, section 2115. Waste Gas Disposal paragraphs A., B., C., D., F., G., H., I.1. through I.5., J. through K., section 2121. Fugitive Emission Control paragraphs B., B.1, B.2., C., C.1.b., C.1.b.i., C.1.b.ii., C.1.b.iii., C.1.c, C.2., C.2.b., C.2.b.i., C.4., C.4.c., C.4.d., C.5. and G., Subchapter C. Vapor Degreasers, section 2125. Vapor Degreasers paragraphs A., A.1., A.2., A.2.i. through A.2.m., A.3., A.3.a. through A.3.d., B., B.1., B.7., B.8., C., C.1., C.1.a. through C.1.c., C.1.i., C.1.j., and D. through G., Subchapter E. Perchloroethylene Dry Cleaning Systems, section 2129. Perchloroethylene Dry Cleaning Systems paragraphs A., A.1., A.2., A.2.a. through A.2.c., C., and D., Subchapter H. Graphic Arts, section 2143. Graphic Arts (Printing) by Rotogravure and Flexographic Processes paragraphs A., A.1., A.3., A.5., B., C. and D., Subchapter I. Pharmaceutical Manufacturing Facilities, section 2145. Pharmaceutical Manufacturing Facilities, paragraphs A., A.1., A.1.c., and E. through G. effective November 20, 1990.

(G) Revisions to LAC, Title 33, Environmental Quality, Part III. Air, Chapter 21. Control of Emissions of Organic Compounds Subchapter A. General, section 2103. Storage of Volatile Organic Compounds paragraphs B.,D., D.2.c. through D.2.e., G., H.3., I.2.c., I.4. and I.5., section 2107. Volatile Organic Compounds–Loading paragraphs D.3. and D.4., section 2109. Oil/Water Separation paragraphs A., B.4., and B.5., section 2111. Pumps and Compressors, section 2113. Housekeeping paragraph A.4., section 2119. Variances paragraph A.; Subchapter D. Cutback Paving Asphalt, section 2127. Cutback Paving Asphalt paragraphs C. and D.1.a. effective April 20, 1991.

(H) Revisions to LAC, Title 33, Environmental Quality, Part III. Air, Chapter 21. Control of Emission of Organic Compounds, section 2115. Waste Gas Disposal paragraphs I., K., and K.4., section 2121. Fugitive Emission Control paragraphs A., C.1., C.1.b.iv. through C.1.b.vi., C.4.a., C.4.b., C.4.h., D., D.1., D.1.b. through D.1.f., and D.2., seciton 2123. Organic Solvents paragraphs A., A.1. through A.3., B., B.1., B.1.a. through B.1.c., C.11., D., D.1. through D.9., E., E.1. through E.7., F., and F.1. through F.4., Subchapter F. Gasoline Handling, section 2131. Filling of Gasoline Storage Vessels paragraphs D.2. and D.3., section 2135. Bulk Gasoline Terminals paragraph E.5., Subchapter G–Petroleum Refinery Operations, section 2139. Refinery Vacuum Producing Systems paragraphs A. and B. and section 2141. Refinery Process Unit Turnarounds effective July 20, 1991.

(I) Revisions to LAC, Title 33, Environmental Quality, Part III. Air, Chapter 61. Division's Sources Test Manual, Subchapter A. Method 43–Capture Efficiency Test Procedures section 6121

through section 6131 effective July 20, 1991.

(J) Revisions to LAC, Title 33, Environmental Quality, Part III. Air Chapter 1. General Provisions, section 111. Definitions–Coating, Department, Distance from Source to Property Line, Exceedance, Hydrocarbon, Leak, Miscellaneous Metal Parts and Products Coating, Nonattainment Area, Ozone Exceedance, SIP effective August 20, 1991.

(61) A revision to the Louisiana SIP to include revisions to LAC, Title 33, "Environmental Quality," Part III. Air, Chapter 21, Control of Emission of Organic Compounds, Section 2132—Stage II Vapor Recovery Systems for Control of Vehicle Refuelling Emissions at Gasoline Dispensing Facilities effective November 20, 1992, and submitted by the Governor by cover letter dated November 10, 1992.

(i) Incorporation by reference.

(A) Revisions to LAC, Title 33, "Environmental Quality," Part III. Air, Chapter 21, Control of Emission of Organic Compounds, Section 2132—Stage II Vapor Recovery Systems for Control of Vehicle Refuelling Emissions at Gasoline Dispensing Facilities, effective November 20, 1992; and Chapter 65, Section 6523—Fee Schedule Listing, effective November 20, 1992.

(ii) Additional materials.

(A) November 15, 1993, narrative plan addressing: Legal authority, control strategy, compliance schedules, air quality surveillance, public notice, determination of regulated universe, Louisiana Department of Environmental Quality recordkeeping, facility recordkeeping, annual in-use above ground inspections, program penalties, training, and benefits.

(62) Alternative emission reduction (bubble) plan for the Dow Chemical facility located in Plaquemine, Iberville Parish, as adopted by the Louisiana Environmental Control Commission on July 28, 1983, submitted by the Governor on October 19, 1983, and amended by the Louisiana Department of Environmental Quality with permit number 1838T(M–2) issued on October 16, 1991.

(ii) Incorporation by reference.

(A) Permit number 1838T(M–2) as issued by the Louisiana Department of Environmental Quality on October 16, 1991.

(ii) Additional material.

(A) Letter dated September 17, 1991, from the Administrator of the Office of Air Quality at the Louisiana Department of Environmental Quality to the Chief of the Planning Section at the Air Programs Branch of the U.S. Environmental Protection Agency—Region 6, furnishing State assurances.

(63) The State is required to implement a Small Business Stationary Source Technical and Environmental Compliance Assistance Program (PROGRAM) as specified in the plan revision submitted by the Governor on October 22, 1992. This plan submittal, as adopted by the Secretary of the Louisiana Department of Environmental Quality (LDEQ) on October 22, 1992, was developed in accordance with section 507 of the Clean Air Act (CAA).

(i) Incorporation by reference.

(A) Enrolled House Bill No. 1319 (Act 1037, Regular Session, 1992), signed into law by the Governor on July 13, 1992, and effective upon signature, enacting Louisiana Revised Statutes (R.S.) 30:2061 and 2062 and R.S. 36:239(H). Included in Act 1037 are provisions establishing a small business stationary source compliance assistance program; creating the State Ombudsman Office for small business; creating a Compliance Advisory Panel (CAP); establishing membership of the CAP; and establishing CAP powers, duties, and functions.

(B) Louisiana R.S. 30:2060N.(6), "Toxic air pollutant emission control program", (the small business stationary source technical and environmental compliance assistance program subsection), as in effect on October 22, 1992.

(C) State of Louisiana Executive Order No. EWE 92–4 dated February 10, 1992, and effective upon signature, creating and establishing an Office of Permits within the Executive Department, Office of the Governor.

(D) Letter from Louisiana Governor Edwards to Mr. Kai Midboe, Secretary, LDEQ, dated February 20, 1992, designating the Governor's Office of Permits as the official State office to serve as Ombudsman for the PROGRAM per the mandate of section 507 of the Federal

CAA. The Coordinator of the Office of Permits will be responsible for administering the Small Business Ombudsman portion of the PROGRAM.

(ii) Additional material.

(A) Narrative SIP Revision entitled, "Louisiana SIP, Concerning CAA Amendments of 1990, Section 507, Small Business Stationary Source Technical and Environmental Compliance Assistance (Program); November 15, 1992."

(B) "State of Louisiana Memorandum of Understanding Between the Governor's Office of Permits and the Louisiana Department of Environmental Quality", signed (and effective) on April 7, 1992, by Mr. Kai David Midboe, Secretary, LDEQ, and Ms. Martha A. Madden, Coordinator, Governor's Office of Permits.

(C) Legal opinion letter dated October 22, 1992, from James B. Thompson, III, Assistant Secretary for Legal Affairs and Enforcement, LDEQ, to Mr. B. J. Wynne, Regional Administrator, EPA Region VI, regarding "Appointment to Small Business Advisory Panel".

(64) Revisions to the Louisiana SIP addressing VOC RACT catch-up requirements were submitted by the Governor of Louisiana by letters dated December 21, 1992, and April 14, 1993.

(i) Incorporation by reference.

(A) Revisions to LAC, Title 33, Environmental Quality, Part III. Air; Chapter 21. Control of Emissions of Organic Compounds, Subchapter A. General; section 2103. Storage of Volatile Organic Compounds, paragraphs G., I., I.4.; section 2109. Oil/Water Separation, paragraph B.4.; Subchapter B. Organic Solvents; section 2123. Organic Solvents, paragraph D.6.; Subchapter C. Vapor Degreasers; section 2125. Vapor Degreasers, paragraph D.; Subchapter F. Gasoline Handling; section 2131. Filling of Gasoline Storage Vessels, paragraphs D., D.1., D.3., G.; section 2135. Bulk Gasoline Terminals, paragraph A.; Subchapter H. Graphic Arts; section 2143. Graphic Arts (Printing) by Rotogravure and Flexographic Processes, paragraph B, as adopted by LDEQ on October 20, 1992.

(B) Revisions to LAC, Title 33, Environmental Quality, Part III. Air; Chapter 21. Control of Emissions of Organic Compounds, Subchapter A. General; section 2115. Waste Gas Disposal, introductory paragraph, paragraphs H., H.1., H.1.a through H.1.d, H.2, H.2.a, H.2.b, H.3, L., as adopted by LDEQ on March 20, 1993.

(ii) Additional material.

(A) Letters dated November 10, 1992 and December 21, 1992, signed by Edwin Edwards, Governor of Louisiana.

(B) Letter dated April 14, 1993, signed by Edwin Edwards, Governor of Louisiana.

(C) Letter of negative declaration dated March 29, 1994, signed by Gustave Von Boduungen, P.E., Assistant Secretary, LDEQ.

(65) Revisions to the Louisiana Department of Environmental Quality Regulation Title 33, Part III, Chapter 9, Section 919, (February 2, 1993), and a technical correction (October 20, 1994). These revisions are for the purpose of implementing an emission statement program for stationary sources within the ozone nonattainment areas.

(i) Incorporation by reference.

(A) Revisions to LAC, title 33, Part III, Chapter 9, *General Regulations on Control of Emissions and Emissions Standards*, Section 919, *Emission Inventory*, adopted in the *Louisiana Register*, Vol. 19, No. 2, 184–186, February 20, 1993. All subsections except B.2.a. and B.2.d.

(B) Revisions to LAC, title 33, Part III, Chapter 9, *General Regulations on Control of Emissions and Emissions standards*, Section 919, *Emission Inventory*, adopted in the *Louisiana Register*, Vol 20, No. 10, 1102, October 20, 1994. Subsections B.2.a. and B.2.d.

(66) Revisions to the Louisiana Department of Environmental Quality Regulation Title 33, Part III, Chapter 2, Section 223 and Chapter 19, Sections 1951–1973. These revisions are for the purpose of implementing a Clean Fuel Fleet Program to satisfy the Federal requirements for a Clean Fuel Fleet Program to be part of the SIP for Louisiana.

(i) Incorporation by reference.

(A) Revision to LAC, Title 33, Part III, Chapter 2, Rules and Regulations for the Fee System of the Air Quality Control Programs, Section 223, Fee Schedule Listing, adopted in the *Louisiana Register*, Vol. 20, No. 11, 1263, November 20, 1994.

(B) Revision to LAC, Title 33, Part III, Chapter 19, Mobile Sources, Subchapter B, Clean Fuel Fleet Program, Sections 1951–1973, adopted in the *Louisiana Register,* Vol. 20, No. 11, 1263–1268, November 20, 1994.

(67) A revision to the Louisiana State Implementation Plan for General Conformity: LAC 33:III. CHAPTER 14. SUBCHAPTER A "Determining Conformity of General Federal Actions to State or Federal Implementation Plan" as adopted by the Louisiana Department of Environmental Quality Secretary and published in the Louisiana Register, Vol. 20, No. 11, 1268, November 20, 1994, was submitted by the Governor on November 10, 1994.

(i) Incorporation by reference.

(A) Louisiana General Conformity: LAC 33:III. CHAPTER 14. SUBCHAPTER A "Determining Conformity of General Federal Actions to State or Federal Implementation Plan" as adopted by the Louisiana Department of Environmental Quality Secretary and published in the Louisiana Register, Vol. 20, No. 11, 1268, November 20, 1994.

(68) A revision to the Louisiana SIP addressing the nonattainment NSR program for Louisiana was submitted by the Governor of Louisiana on March 3, 1993, and November 15, 1993.

(i) Incorporation by reference.

(A) Revision to LAC, Title 33, Part III. Air, Chapter 5. Permit Procedures, by the addition of Section 504. Nonattainment New Source Review Procedures, as promulgated in the Louisiana Register, Volume 19, Number 2, 176–183, February 20, 1993; effective February 20, 1993, and submitted by the Governor on March 3, 1993.

(B) Revisions to LAC, Title 33, Part III. Air, Chapter 5. Permit Procedures, Section 504. Nonattainment New Source Review Procedures, Subsections: A., Applicability, Paragraphs A(1), A(2), A(3), A(4); D., Nonattainment New Source Requirements, Paragraph D(4); Delete G., Permit Procedures, Public Participation and Notification; Reletter H., Definitions, to G., and revise definitions for Major Modification (paragraphs: a., c.iii, c.iv, c.v.(a)(b), c.vi, c.vii), Major Stationary Source (paragraphs: a., d.i); Delete Table 1; Renumber Table 2, Major Stationary Source/Major Modification Emission Thresholds, to Table 1, and revise Footnote 1., as promulgated in the Louisiana Register, Volume 19, Number 11, 1420–1421, November 20, 1993; effective November 20, 1993, and submitted by the Governor on November 4, 1993.

(ii) Additional material.

(A) Letter dated January 7, 1994, signed by the Governor of Louisiana, which clarifies that section 504 is to be reviewed under the SIP program.

(69) The Governor of Louisiana submitted revisions to Regulation Louisiana Administrative Code on March 22, 1995 to incorporate changes in the Federal PSD permitting regulations for PM–10 increments.

(i) Incorporation by reference.

(A) Revisions to Regulation Louisiana Administrative Code 33:III.Chapter 5, Section 509, effective February 20, 1995: Section B. Definitions: Baseline Date; Section B. Definitions: Net Emissions Increase; Section D. Ambient Air Increments; Section I.8.a.; Section K.2.; and Section P.4.

(70) The Louisiana Department of Environmental Quality submitted a redesignation request and maintenance plan for Pointe Coupee Parish on December 20, 1995. The redesignation request and maintenance plan meet the redesignation requirements in section 107(d)(3)(E) of the Act as amended in 1990. The redesignation meets the Federal requirements of section 182(a)(1) of the Clean Air Act as a revision to the Louisiana ozone State Implementation Plan for Pointe Coupee Parish. The EPA therefore approved the request for redesignation to attainment with respect to ozone for Pointe Coupee Parish on December 20, 1996.

(i) Incorporation by reference. Letter dated August 31, 1995, from Mr. Gustave Von Bodungen, P.E., Assistant Secretary, Louisiana Department of Environmental Quality, transmitting a copy of the Pointe Coupee Parish maintenance plan for the EPA's approval.

(ii) Additional material.

(A) Letter dated August 28, 1995, from Governor Edwin E. Edwards of Louisiana to Ms. Jane Saginaw, Regional Administrator, requesting the reclassification and redesignation of Pointe Coupee Parish to attainment for ozone.

(B) The ten year ozone maintenance plan, including emissions projections and contingency measures, submitted to EPA as part of the Pointe Coupee Parish redesignation request on December 20, 1995.

(71) A revision to the Louisiana SIP addressing the 15 percent rate-of-progress requirements was submitted by the Governor of Louisiana by cover letter dated December 15, 1995. This revision, submitted to satisfy the requirements of section 182(b) of the Clean Air Act (Act), will aid in ensuring that reasonable further progress is made towards attaining the national ambient air quality standard (NAAQS) for ozone.

(i) Incorporation by reference.

(A) Revisions to LAC, Title 33, Environmental Quality, Part III. Air; Chapter 21. Control of Emissions of Organic Compounds, Subchapter A. General; section 2108. Marine Vapor Recovery, paragraphs B.1., B.2., B.3., B.3.a. through B.3.d., B.4.a., B.4.b., B.5., B.6., D.1.a., D.1.a.i., D.1.a.ii., D.1.b., D.2., D.3., D.4.a., D.4.b., D.4.c., D.4.c.i., D.4.c.ii., D.4.d., D.4.e., D.4.e.i., D.4.e.ii., D.4.f., D.4.g., E.2., E.2.a. through E.2.c., F.1., F.2., F.3., G.1., G.2., as adopted by LDEQ on October 20, 1988.

(B) Revisions to LAC, Title 33, Environmental Quality, Part III. Air; Chapter 21. Control of Emissions of Organic Compounds, Subchapter A. General; section 2108. Marine Vapor Recovery, paragraphs A., B. Definitions-Barge, Crude Oil, Gasoline, Ship, C., C.1., C.2., C.3., C.3.a. through C.3.d. (note: paragraphs B.1., B.2., B.3., and B.3.a. through B.3.d., as adopted on October 20, 1988, were moved to C.1., C.2., C.3., and C.3.a. through C.3.d. without repromulgating), C.4., C.4.a., C.4.b., C.5., C.6. (note: paragraphs B.4.a., B.4.b., B.5., and B.6., as adopted on October 20, 1988, were moved to C.4.a., C.4.b., C.5., and C.6. without repromulgating), D.1., D.1.a. through D.1.c., D.2., D.2.a. through D.2.c., D.3., E., E.1., E.1.a., E.1.a.i., E.1.a.ii., E.1.b., E.2., E.3. (note: D.1.a., D.1.a.i., D.1.a.ii., D.1.b., D.2., and D.3., as adopted October 20, 1988, were moved to E.1.a., E.1.a.i., E.1.a.ii., E.1.b., E.2., and E.3. without repromulgating), E.4., E.4.a., E.4.b., E.4.c., E.4.c.i., E.4.c.ii., E.4.d., E.4.e., E.4.e.i., E.4.e.ii., E.4.f., E.4.g. (note: D.4.a., D.4.b., D.4.c., D.4.c.i., D.4.c.ii., D.4.d., D.4.e., D.4.e.i., D.4.e.ii., D.4.f., and D.4.g, as adopted on October 20, 1988, were moved to E.4.a., E.4.b., E.4.c., E.4.c.i., E.4.c.ii., E.4.d., E.4.e., E.4.e.i., E.4.e.ii., E.4.f., and E.4.g. without repromulgating), E.5., F., F.1., F.2., F.2.a. through F.2.e. (note: E.2. and E.2.a. through E.2.c., as adopted on October 20, 1988, were moved to F.2. and F.2.a through F.2.c. without repromulgating), G., G.1., G.2., G.3. (note: F.1., F.2., and F.3., as adopted October 20, 1988, were moved to G.1., G.2., and G.3. without repromulgating), H., H.1., H.2. (note: G.1. and G.2., as adopted on October 20, 1988, were moved to H.1. and H.2. without repromulgating), as adopted by LDEQ on November 20, 1990.

(C) Revisions to LAC, Title 33, Environmental Quality, Part III. Air; Chapter 21. Control of Emissions of Organic Compounds, Subchapter A. General; section 2122. Fugitive Emission Control for Ozone Nonattainment Areas, paragraphs A., A.1. through A.5., A.6., A.6.a. through A.6.d., B. Definitions-Connector, Good Performance Level, Heavy Liquid Service, Inaccessible Valve/Connector, In Vacuum Service, Light Liquid, Light Liquid Service, Liquid Service, Process Unit, Process Unit Shutdown, Unrepairable Component, C., C.1., C.1.a. through C.1.c., C.2. through C.5., D., D.1., D.1.a., D.1.a.i., D.1.a.ii., D.1.b., D.1.b.i. through D.1.b.v., D.1.c. through D.1.e., D.2., D.2.a., D.2.b., D.2.b.i. through D.2.b.iii., D.3., D.3.a. through D.3.d., D.4., D.4.a. through D.4.k., D.5., E.1.a. through E.1.f., E.2., E.3., E.3.a., E.3.a.i. through E.3.a.v., E.3.b., E.3.b.i. through E.3.b.v., F., F.1., F.2., F.2.a. through F.2.j., F.3., G., G.1. through G.13., as adopted by LDEQ on October 20, 1994.

(D) Revisions to LAC, Title 33, Environmental Quality, Part III. Air; Chapter 21. Control of Emissions of Organic Compounds, Subchapter A. General; section 2122. Fugitive Emission Control for Ozone Nonattainment Areas, paragraphs E., E.1., E.1.g., as adopted by LDEQ on November 20, 1994.

(E) Revisions to LAC, Title 33, Environmental Quality, Part III. Air; Chapter 21. Control of Emissions of Organic Compounds, Subchapter A. General; section 2103. Storage of Volatile Organic Compounds, paragraphs A., B., D.1., D.1.a. through D.1.d., D.2., D.2.a.

through D.2.e., E., F., G., G.1. through G.4., H., H.1., H.2., H.2.a. through H.2.e., H.3., I., I.1., I.2., I.2.a. through I.2.c., I.3. through I.5., as adopted by LDEQ on December 20, 1994.

(F) Revisions to LAC, Title 33, Environmental Quality, Part III. Air;

Chapter 21. Control of Emissions of Organic Compounds, Subchapter A. General; section 2103. Storage of Volatile Organic Compounds, paragraphs C., D., D.3., as adopted by LDEQ on November 20, 1995.

(G) Revisions to LAC, Title 33, Environmental Quality, Part III. Air; Chapter 21. Control of Emissions of Organic Compounds, Subchapter A. General; section 2103. Storage of Volatile Organic Compounds, paragraph D.4., as adopted by LDEQ on December 20, 1995.

(H) Reasonable Further Progress Agreed To Order, dated December 16, 1994, issued by the Assistant Secretary of the State of Louisiana Department of Environmental Quality in the matter of BASF Corporation, Geismar, Louisiana.

(I) Reasonable Further Progress Agreed To Order, dated August 22, 1994, issued by the Assistant Secretary of the State of Louisiana Department of Environmental Quality in the matter of CosMar Company, Inc., Carville, Louisiana.

(J) Reasonable Further Progress Agreed To Order, dated September 26, 1994, issued by the Assistant Secretary of the State of Louisiana Department of Environmental Quality in the matter of Shell Chemical Company, Geismar, Louisiana.

(K) Reasonable Further Progress Agreed To Order, dated September 8, 1994, issued by the Assistant Secretary of the State of Louisiana Department of Environmental Quality in the matter of Uniroyal Chemical Company, Inc., Geismar, Louisiana.

(L) Reasonable Further Progress Agreed To Order, dated September 8, 1994, issued by the Assistant Secretary of the State of Louisiana Department of Environmental Quality in the matter of Vulcan Chemicals, Geismar, Louisiana.

(M) SIP narrative plan entitled, "Revision to the 15% Rate of Progress Plan and 1990 Emissions Inventory," dated December 28, 1995, page 11, Section 2.2, 1996 Target Level Emissions, first paragraph; page 23, Section 5, Table 2—Reductions in Plan; page 173, Appendix G, table—Reductions from Industrial Sources through 1996 Used for the 15% Requirement, which ends on page 174.

(ii) Additional materials.

(A) SIP narrative plan entitled, "Revision to 15% Rate of Progress Plan and 1990 Emissions Inventory," submitted by the Governor of Louisiana on December 15, 1995, except Section 6. Contingency Measures Documentation, Appendix M. Contingency Reductions Documentation, and Appendix N. Banking Regulations.

(B) Letter dated May 3, 1996, from Gustave Von Bodungen, Louisiana Department of Environmental Quality, to Thomas Diggs, U.S. Environmental Protection Agency, transmitting supplemental documentation for the 15 Percent Rate of Progress Plan.

(72) Revisions to the Louisiana SIP addressing VOC RACT Negative Declarations. The Governor of Louisiana submitted the negative declarations for reasonably available control technology (RACT) for the Baton Rouge ozone nonattainment area on December 15, 1996. Section 172(c)(1) of the Clean Air Act requires nonattainment areas to adopt, at a minimum, RACT to reduce emissions from existing sources. Pursuant to section 182(b)(2) of the Act, for moderate and above ozone nonattainment areas, the EPA has identified 13 categories for such sources and developed the Control Technique Guidelines (CTGs) or Alternate Control Techniques (ACTs) documents to implement RACT at those sources. When no major volatile organic compound (VOC) sources for a CTG/ACT category exist in a nonattainment area, a State may submit a negative declaration for that category. Louisiana's submittal included two negative declaration letters from Mr. Gustave Von Bodungen to Ms. Karen Alvarez dated April 6, 1994, and June 20, 1994, for the following source categories: offset lithography, plastic parts-business machines, plastic parts-others, wood furniture, aerospace coatings, autobody refinishing, and shipbuilding coatings/repair. This submittal satisfies section 182(b)(2) of the Clean Air Act Amendments of 1990 for these particular CTG/ACT source

categories for the Baton Rouge ozone nonattainment area.

(i) Incorporation by reference. The letter dated December 15, 1995, from the Governor of Louisiana to the Regional Administrator, submitting a revision to the Louisiana SIP for VOC RACT rules, which included VOC RACT negative declarations.

(ii) Additional material.

(A) The negative declaration letter dated April 16, 1994, from Mr. Gustave Von Bodungen to Ms. Karen Alvarez.

(B) The negative declaration letter dated June 20, 1994, from Mr. Gustave Von Bodungen to Ms. Karen Alvarez.

(73) The Louisiana Department of Environmental Quality submitted a redesignation request and maintenance plan for Calcasieu Parish on December 20, 1995. The redesignation request and maintenance plan meet the redesignation requirements in section 107(d)(3)(E) of the Act. The redesignation meets the Federal requirements of section 182(a)(1) of the Act as a revision to the Louisiana ozone State Implementation Plan for Calcasieu Parish. The EPA therefore approved the request for redesignation to attainment with respect to ozone for Calcasieu Parish on June 2, 1997.

(i) Incorporation by reference. Letter dated December 20, 1995, from Governor Edwin E. Edwards of Louisiana to Ms. Jane Saginaw, Regional Administrator, transmitting a copy of the Calcasieu Parish maintenance plan and requesting the redesignation of Calcasieu Parish to attainment for ozone.

(ii) Additional material. The ten year ozone maintenance plan, including emissions projections and contingency measures, submitted to EPA as part of the Calcasieu Parish redesignation request on December 20, 1995.

(74) Revisions to the Louisiana Department of Environmental Quality Regulation Title 33, Part III, Chapter 21, Control of Emission of Organic Compounds, submitted by the Governor on December 15, 1995.

(i) Incorporation by reference.

(A) LAC, Title 33, Part III, Chapter 21, Section 2147, Limiting Volatile Organic Compound Emissions from Reactor Processes and Distillation Operations in the Synthetic Organic Chemical Manufacturing Industry, adopted in the Louisiana Register on April 20, 1995 (LR 21:380).

(B) LAC, Title 33, Part III, Chapter 21, Section 2149, Limiting Volatile Organic Compound Emissions from Batch Processing, adopted in the Louisiana Register on April 20, 1995 (LR 21:387).

(C) LAC, Title 33, Part III, Chapter 21, Section 2151, Limiting Volatile Organic Compound Emissions from Cleanup Solvent Processing, adopted in the Louisiana Register on April 20, 1995 (LR 21:391).

(ii) Additional material.

(A) Letter of negative declaration for wood furniture dated January 21, 1997, from the State of Louisiana Department of Environmental Quality.

(75) A revision to the Louisiana State Implementation Plan for General Conformity: LAC 33:III. Chapter 14. Subchapter A "Determining Conformity of General Federal Actions to State or Federal Implementation Plan," Section 1405.B as adopted by the Louisiana Department of Environmental Quality Secretary and published in the Louisiana Register, Vol. 23, No. 6, 720, June 20, 1997, was submitted by the Governor on September 8, 1997.

(i) Incorporation by reference.

(A) Louisiana General Conformity: LAC 33:III. Chapter 14. Subchapter A "Determining Conformity of General Federal Actions to State or Federal Implementation Plan", Section 1405.B as adopted by the Louisiana Department of Environmental Quality Secretary and published in the Louisiana Register, Vol. 23, No. 6, 720, June 20, 1997.

(76) [Reserved]

(77) Revisions to the Louisiana Administrative Code, Title 33, Part III, Chapter 21, Section 2149 (LAC 33:III.2149), "Limiting Volatile Organic Compound Emissions from Batch Processing," submitted by the Governor on March 23, 1998.

(i) Incorporation by reference.

LAC 33:III Chapter 21, revised paragraph 2149.A.2.b; paragraphs 2149.C.2.a, b, and c become paragraphs 2149.C.2.d, e, and f respectively; and add new paragraphs 2149.C.2.a, b, and c, as adopted in the Louisiana Register on November 20, 1997 (LR 23:1507).

(ii) Additional material. None.

(78) [Reserved]

(79) Site-specific revision to the 15% Rate-of-Progress plan submitted by the Governor in a letter dated December 20, 1997. The revision provides for a schedule extension for installation of guide pole sliding cover gaskets on 33 external floating roof tanks located at the Baton Rouge refinery of Exxon Company U.S.A.

(i) Incorporation by reference. Letters dated July 17, 1997, and September 12, 1997, from the LDEQ to Exxon Company U.S.A. approving the compliance date extension; which are included in the State Implementation Plan submittal entitled, "Summary of 15% Rate-of-Progress State Implementation Plan Revision," dated December 20, 1997.

(ii) Additional material.

(A) Letter from the Governor of Louisiana dated December 20, 1997, transmitting a copy of the State Implementation Plan revision.

(B) Letters dated November 13, 1996; May 14, 1997; and July 3, 1997; from Exxon Company U.S.A. to the LDEQ requesting the compliance date extension and including a list of the subject tanks, the date of the next maintenance downtime, and emissions estimates for the tanks; which are included in the State Implementation Plan submittal entitled, "Summary of 15% Rate-of-Progress State Implementation Plan Revision," dated December 20, 1997.

[37 FR 10869, May 31, 1972. Redesignated at 63 FR 63183, Nov. 12, 1998]

EDITORIAL NOTE: For FEDERAL REGISTER citations affecting § 52.999, see the List of CFR Sections Affected, which appears in the Finding Aids section of the printed volume and on GPO Access.