AUTHENTICATED
U.S. GOVERNMENT
INFORMATION
GPO

PART 393—PARTS AND ACCESSORIES NECESSARY FOR SAFE OPERATION

Subpart A—General

Sec.
393.1 Scope of the rules of this part.
393.3 Additional equipment and accessories.
393.5 Definitions.
393.7 Matter incorporated by reference.

Subpart B—Lamps, Reflective Devices, and Electrical Wiring

393.9 Lamps operable, prohibition of obstructions of lamps and reflectors.
393.11 Lamps and reflective devices.
393.13 Retroreflective sheeting and reflex reflectors, requirements for semitrailers and trailers manufactured before December 1, 1993.
393.17 Lamps and reflectors—combinations in driveaway-towaway operation.
393.19 Hazard warning signals.
393.20 [Reserved]
393.22 Combination of lighting devices and reflectors.
393.23 Power supply for lamps.
393.24 Requirements for head lamps, auxiliary driving lamps and front fog lamps.
393.25 Requirements for lamps other than head lamps.
393.26 Requirements for reflex reflectors.
393.27 [Reserved]
393.28 Wiring systems.
393.29 [Reserved]
393.30 Battery installation.
393.31—393.33 [Reserved]

Subpart C—Brakes

393.40 Required brake systems.
393.41 Parking brake system.
393.42 Brakes required on all wheels.
393.43 Breakaway and emergency braking.
393.44 Front brake lines, protection.
393.45 Brake tubing and hoses; hose assemblies and end fittings.
393.46 [Reserved]
393.47 Brake actuators, slack adjusters, linings/pads and drums/rotors.
393.48 Brakes to be operative.
393.49 Single valve to operate all brakes.
393.50 Reservoirs required.
393.51 Warning signals, air pressure and vacuum gauges.
393.52 Brake performance.
393.53 Automatic brake adjusters and brake adjustment indicators.
393.55 Antilock brake systems.

Subpart D—Glazing and Window Construction

393.60 Glazing in specified openings.
393.61 Truck and truck tractor window construction.
393.62 Emergency exits for buses.
393.63 [Reserved]

Subpart E—Fuel Systems

393.65 All fuel systems.
393.67 Liquid fuel tanks.
393.68 Compressed natural gas fuel containers.
393.69 Liquefied petroleum gas systems.

Subpart F—Coupling Devices and Towing Methods

393.70 Coupling devices and towing methods, except for driveaway-towaway operations.
393.71 Coupling devices and towing methods, driveaway-towaway operations.

Subpart G—Miscellaneous Parts and Accessories

393.75 Tires.
393.76 Sleeper berths.
393.77 Heaters.
393.78 Windshield wiping and washing systems.
393.79 Windshield defrosting and defogging systems.
393.80 Rear-vision mirrors.
393.81 Horn.
393.82 Speedometer.
393.83 Exhaust systems.
393.84 Floors.
393.85 [Reserved]
393.86 Rear impact guards and rear end protection.
393.87 Warning flags on projecting loads.
393.88 Television receivers.
393.89 Buses, driveshaft protection.
393.90 Buses, standee line or bar.
393.91 Buses, aisle seats prohibited.
393.92 [Reserved]
393.93 Seats, seat belt assemblies, and seat belt assembly anchorages.
393.94 Interior noise levels in power units.

Subpart H—Emergency Equipment

393.95 Emergency equipment on all power units.

Subpart I—Protection Against Shifting and Falling Cargo

393.100 Which types of commercial motor vehicles are subject to the cargo securement standards of this subpart, and what general requirements apply?
393.102 What are the minimum performance criteria for cargo securement devices and systems?
393.104 What standards must cargo securement devices and systems meet in order

to satisfy the requirements of this subpart?
393.106 What are the general requirements for securing articles of cargo?
393.108 How is the working load limit of a tiedown determined?
393.110 What else do I have to do to determine the minimum number of tiedowns?
393.112 Must a tiedown be adjustable?
393.114 What are the requirements for front end structures used as part of a cargo securement system?

SPECIFIC SECUREMENT REQUIREMENTS BY COMMODITY TYPE

393.116 What are the rules for securing logs?
393.118 What are the rules for securing dressed lumber or similar building products?
393.120 What are the rules for securing metal coils?
393.122 What are the rules for securing paper rolls?
393.124 What are the rules for securing concrete pipe?
393.126 What are the rules for securing intermodal containers?
393.128 What are the rules for securing automobiles, light trucks and vans?
393.130 What are the rules for securing heavy vehicles, equipment and machinery?
393.132 What are the rules for securing flattened or crushed vehicles?
393.134 What are the rules for securing roll-on/roll-off and hook lift containers?
393.136 What are the rules for securing large boulders?

Subpart J—Frames, Cab and Body Components, Wheels, Steering, and Suspension Systems

393.201 Frames.
393.203 Cab and body components.
393.205 Wheels.
393.207 Suspension systems.
393.209 Steering wheel systems.

AUTHORITY: 49 U.S.C. 322, 31136, and 31502; Section 1041(b) of Pub. L. 102–240, 105 Stat. 1914, 1993 (1991); and 49 CFR 1.73.

SOURCE: 33 FR 19735, Dec. 25, 1968, unless otherwise noted.

EDITORIAL NOTE: Nomenclature changes to part 393 appear at 66 FR 49874, Oct. 1, 2001.

Subpart A—General

SOURCE: 53 FR 49384, Dec. 7, 1988, unless otherwise noted.

§ 393.1 Scope of the rules in this part.

(a) The rules in this part establish minimum standards for commercial motor vehicles as defined in § 390.5 of this title. Only motor vehicles (as defined in § 390.5) and combinations of motor vehicles which meet the definition of a commercial motor vehicle are subject to the requirements of this part. All requirements that refer to motor vehicles with a GVWR below 4,536 kg (10,001 pounds) are applicable only when the motor vehicle or combination of motor vehicles meets the definition of a commercial motor vehicle.

(b) Every employer and employee shall comply and be conversant with the requirements and specifications of this part. No employer shall operate a commercial motor vehicle, or cause or permit it to be operated, unless it is equipped in accordance with the requirements and specifications of this part.

[70 FR 48025, Aug. 15, 2005]

§ 393.3 Additional equipment and accessories.

Nothing contained in this subchapter shall be construed to prohibit the use of additional equipment and accessories, not inconsistent with or prohibited by this subchapter, provided such equipment and accessories do not decrease the safety of operation of the motor vehicles on which they are used.

§ 393.5 Definitions.

As used in this part, the following words and terms are construed to mean:

Aggregate working load limit. The summation of the working load limits or restraining capacity of all devices used to secure an article of cargo on a vehicle.

Agricultural commodity trailer. A trailer that is designed to transport bulk agricultural commodities in off-road harvesting sites and to a processing plant or storage location, as evidenced by skeletal construction that accommodates harvest containers, a maximum length of 28 feet, and an arrangement of air control lines and reservoirs that minimizes damage in field operations.

Air brake system. A system, including an air-over-hydraulic brake subsystem, that uses air as a medium for transmitting pressure or force from the driver

control to the service brake, but does not include a system that uses compressed air or vacuum only to assist the driver in applying muscular force to hydraulic or mechanical components.

Air-over-hydraulic brake subsystem. A subsystem of the air brake system that uses compressed air to transmit a force from the driver control to a hydraulic brake system to actuate the service brakes.

Anchor point. Part of the structure, fitting or attachment on a vehicle or article of cargo to which a tiedown is attached.

Antilock Brake System or *ABS* means a portion of a service brake system that automatically controls the degree of rotational wheel slip during braking by:

(1) Sensing the rate of angular rotation of the wheels;

(2) Transmitting signals regarding the rate of wheel angular rotation to one or more controlling devices which interpret those signals and generate responsive controlling output signals; and

(3) Transmitting those controlling signals to one or more modulators which adjust brake actuating forces in response to those signals.

Article of cargo. A unit of cargo, other than a liquid, gas, or aggregate that lacks physical structure (e.g., grain, gravel, etc.) including articles grouped together so that they can be handled as a single unit or unitized by wrapping, strapping, banding or edge protection device(s).

Auxiliary driving lamp. A lighting device mounted to provide illumination forward of the vehicle which supplements the upper beam of a standard headlighting system. It is not intended for use alone or with the lower beam of a standard headlamp system.

Bell pipe concrete. Pipe whose flanged end is of larger diameter than its barrel.

Blocking. A structure, device or another substantial article placed against or around an article of cargo to prevent horizontal movement of the article of cargo.

Boat trailer. A trailer designed with cradle-type mountings to transport a boat and configured to permit launching of the boat from the rear of the trailer.

Bracing. A structure, device, or another substantial article placed against an article of cargo to prevent it from tipping, that may also prevent it from shifting.

Brake. An energy conversion mechanism used to stop, or hold a vehicle stationary.

Brake power assist unit. A device installed in a hydraulic brake system that reduces the operator effort required to actuate the system, but which if inoperative does not prevent the operator from braking the vehicle by a continued application of muscular force on the service brake control.

Brake power unit. A device installed in a brake system that provides the energy required to actuate the brakes, either directly or indirectly through an auxiliary device, with the operator action consisting only of modulating the energy application level.

Brake tubing/hose. Metallic brake tubing, nonmetallic brake tubing and brake hose are conduits or lines used in a brake system to transmit or contain the medium (fluid or vacuum) used to apply the motor vehicle's brakes.

Chassis. The load-supporting frame of a commercial motor vehicle, exclusive of any appurtenances which might be added to accommodate cargo.

Clearance Lamps. Lamps that provide light to the front or rear, mounted on the permanent structure of the vehicle, such that they indicate the overall width of the vehicle.

Container chassis trailer. A semitrailer of skeleton construction limited to a bottom frame, one or more axles, specially built and fitted with locking devices for the transport of intermodal cargo containers, so that when the chassis and container are assembled, the units serve the same function as an over the road trailer.

Converter dolly. A motor vehicle consisting of a chassis equipped with one or more axles, a fifth wheel and/or equivalent mechanism, and drawbar, the attachment of which converts a semitrailer to a full trailer.

Curb weight. The weight of a motor vehicle with standard equipment, maximum capacity of fuel, oil, and coolant; and, if so equipped, air conditioning

and additional weight of optional engine. Curb weight does not include the driver.

Dunnage. All loose materials used to support and protect cargo.

Dunnage bag. An inflatable bag intended to fill otherwise empty space between articles of cargo, or between articles of cargo and the wall of the vehicle.

Edge protector. A device placed on the exposed edge of an article to distribute tiedown forces over a larger area of cargo than the tiedown itself, to protect the tie-down and/or cargo from damage, and to allow the tiedown to slide freely when being tensioned.

Electric brake system. A system that uses electric current to actuate the service brake.

Emergency brake. A mechanism designed to stop a motor vehicle after a failure of the service brake system.

Emergency brake system. A mechanism designed to stop a vehicle after a single failure occurs in the service brake system of a part designed to contain compressed air or brake fluid or vacuum (except failure of a common valve, manifold brake fluid housing or brake chamber housing).

Fifth wheel. A device mounted on a truck tractor or similar towing vehicle (e.g., converter dolly) which interfaces with and couples to the upper coupler assembly of a semitrailer.

Frame vehicle. A vehicle with skeletal structure fitted with one or more bunk units for transporting logs. A bunk unit consists of U-shaped front and rear bunks that together cradle logs. The bunks are welded, gusseted or otherwise firmly fastened to the vehicle's main beams, and are an integral part of the vehicle.

Friction mat. A device placed between the deck of a vehicle and article of cargo, or between articles of cargo, intended to provide greater friction than exists naturally between these surfaces.

Front fog lamp. A lighting device whose beam provides downward illumination forward of the vehicle and close to the ground, and is to be used only under conditions of rain, snow, dust, smoke or fog. A pair of fog lamps may be used alone, with parking, tail, side, marker, clearance and identification lamps, or with a lower beam headlamp at the driver's discretion in accordance with state and local use law.

Fuel tank fitting. Any removable device affixed to an opening in the fuel tank with the exception of the filler cap.

g. The acceleration due to gravity, 32.2 ft/sec^2 (9.81 m/sec^2).

Grommet. A device that serves as a support and protection to that which passes through it.

Hazard warning signal. Lamps that flash simultaneously to the front and rear, on both the right and left sides of a commercial motor vehicle, to indicate to an approaching driver the presence of a vehicular hazard.

Head lamps. Lamps used to provide general illumination ahead of a motor vehicle.

Heater. Any device or assembly of devices or appliances used to heat the interior of any motor vehicle. This includes a catalytic heater which must meet the requirements of § 177.834(l)(2) of this title when Class 3 (flammable liquid) or Division 2.1 (flammable gas) is transported.

Heavy hauler trailer. A trailer which has one or more of the following characteristics, but which is not a container chassis trailer:

(1) Its brake lines are designed to adapt to separation or extension of the vehicle frame; or

(2) Its body consists only of a platform whose primary cargo-carrying surface is not more than 1,016 mm (40 inches) above the ground in an unloaded condition, except that it may include sides that are designed to be easily removable and a permanent ''front-end structure'' as that term is used in § 393.106 of this title.

Hook-lift container. A specialized container, primarily used to contain and transport materials in the waste, recycling, construction/demolition and scrap industries, which is used in conjunction with specialized vehicles, in which the container is loaded and unloaded onto a tilt frame body by an articulating hook-arm.

Hydraulic brake system. A system that uses hydraulic fluid as a medium for transmitting force from a service brake control to the service brake, and

that may incorporate a brake power assist unit, or a brake power unit.

Identification lamps. Lamps used to identify certain types of commercial motor vehicles.

Integral securement system. A system on certain roll-on/roll-off containers and hook-lift containers and their related transport vehicles in which compatible front and rear hold down devices are mated to provide securement of the complete vehicle and its articles of cargo.

Lamp. A device used to produce artificial light.

Length of a manufactured home. The largest exterior length in the traveling mode, including any projections which contain interior space. Length does not include bay windows, roof projections, overhangs, or eaves under which there is no interior space, nor does it include drawbars, couplings or hitches.

License plate lamp. A lamp used to illuminate the license plate on the rear of a motor vehicle.

Longwood. All logs that are not shortwood, i.e., are over 4.9 m (16 feet) long. Such logs are usually described as long logs or treelength.

Low chassis vehicle. (1) A trailer or semitrailer manufactured on or after January 26, 1998, having a chassis which extends behind the rearmost point of the rearmost tires and which has a lower rear surface that meets the guard width, height, and rear surface requirements of § 571.224 in effect on the date of manufacture, or a subsequent edition.

(2) A motor vehicle, not described by paragraph (1) of this definition, having a chassis which extends behind the rearmost point of the rearmost tires and which has a lower rear surface that meets the guard configuration requirements of § 393.86(b)(1).

Manufactured home means a structure, transportable in one or more sections, which in the traveling mode, is eight body feet or more in width or forty body feet or more in length, or, when erected on site, is three hundred twenty or more square feet, and which is built on a permanent chassis and designed to be used as a dwelling with or without a permanent foundation when connected to the required utilities, and includes the plumbing, heating, air-conditioning, and electrical systems contained therein. Calculations used to determine the number of square feet in a structure will be based on the structure's exterior dimensions measured at the largest horizontal projections when erected on site. These dimensions will include all expandable rooms, cabinets, and other projections containing interior space, but do not include bay windows. This term includes all structures which meet the *above* requirements except the size requirements and with respect to which the manufacturer voluntarily files a certification pursuant to 24 CFR 3282.13 and complies with the standards set forth in 24 CFR part 3280.

Multi-piece windshield. A windshield consisting of two or more windshield glazing surface areas.

Parking brake system. A mechanism designed to prevent the movement of a stationary motor vehicle.

Play. Any free movement of components.

Pulpwood trailer. A trailer or semitrailer that is designed exclusively for harvesting logs or pulpwood and constructed with a skeletal frame with no means for attachment of a solid bed, body, or container.

Rail vehicle. A vehicle whose skeletal structure is fitted with stakes at the front and rear to contain logs loaded crosswise.

Rear extremity. The rearmost point on a motor vehicle that falls above a horizontal plane located 560 mm (22 inches) above the ground and below a horizontal plane located 1,900 mm (75 inches) above the ground when the motor vehicle is stopped on level ground; unloaded; its fuel tanks are full; the tires (and air suspension, if so equipped) are inflated in accordance with the manufacturer's recommendations; and the motor vehicle's cargo doors, tailgate, or other permanent structures are positioned as they normally are when the vehicle is in motion. Nonstructural protrusions such as taillamps, rubber bumpers, hinges and latches are excluded from the determination of the rearmost point.

Reflective material. A material conforming to Federal Specification L-S-300, ''Sheeting and Tape, Reflective; Non-exposed Lens, Adhesive Backing,''

(September 7, 1965) meeting the performance standard in either Table 1 or Table 1A of SAE Standard J594f, ''Reflex Reflectors'' (January, 1977).

Reflex reflector. A device which is used on a vehicle to give an indication to an approaching driver by reflected lighted from the lamps on the approaching vehicle.

Saddle-mount. A device, designed and constructed as to be readily demountable, used in driveaway-towaway operations to perform the functions of a conventional fifth wheel:

(1) Upper-half. *Upper-half* of a ''saddle-mount'' means that part of the device which is securely attached to the towed vehicle and maintains a fixed position relative thereto, but does not include the ''king-pin;''

(2) Lower-half. *Lower-half* of a ''saddle-mount'' means that part of the device which is securely attached to the towing vehicle and maintains a fixed position relative thereto but does not include the ''king-pin;'' and

(3) King-pin. *King-pin* means that device which is used to connect the ''upper-half'' to the ''lower-half'' in such manner as to permit relative movement in a horizontal plane between the towed and towing vehicles.

Service brake system. A primary brake system used for slowing and stopping a vehicle.

Shoring bar. A device placed transversely between the walls of a vehicle and cargo to prevent cargo from tipping or shifting.

Shortwood. All logs typically up to 4.9 m (16 feet) long. Such logs are often described as cut-up logs, cut-to-length logs, bolts or pulpwood. Shortwood may be loaded lengthwise or crosswise, though that loaded crosswise is usually no more than 2.6 m (102 inches) long.

Sided vehicle. A vehicle whose cargo compartment is enclosed on all four sides by walls of sufficient strength to contain articles of cargo, where the walls may include latched openings for loading and unloading, and includes vans, dump bodies, and a sided intermodal container carried by a vehicle.

Side extremity. The outermost point on a side of the motor vehicle that is above a horizontal plane located 560 mm (22 inches) above the ground, below a horizontal plane located 1,900 mm (75 inches) above the ground, and between a transverse vertical plane tangent to the rear extremity of the vehicle and a transverse vertical plane located 305 mm (12 inches) forward of that plane when the vehicle is unloaded; its fuel tanks are full; and the tires (and air suspension, if so equipped) are inflated in accordance with the manufacturer's recommendations. Non-structural protrusions such as taillights, hinges and latches are excluded from the determination of the outermost point.

Side marker lamp (Intermediate). A lamp mounted on the side, on the permanent structure of the motor vehicle that provides light to the side to indicate the approximate middle of the vehicle, when the motor vehicle is 9.14 meters (30 feet) or more in length.

Side Marker Lamps. Lamps mounted on the side, on the permanent structure of the motor vehicle as near as practicable to the front and rear of the vehicle, that provide light to the side to indicate the overall length of the motor vehicle.

Special purpose vehicle. (1) A trailer or semitrailer manufactured on or after January 26, 1998, having work-performing equipment that, while the motor vehicle is in transit, resides in or moves through the area that could be occupied by the horizontal member of the rear impact guard, as defined by the guard width, height and rear surface requirements of § 571.224 (paragraphs S5.1.1 through S5.1.3), in effect on the date of manufacture, or a subsequent edition.

(2) A motor vehicle, not described by paragraph (1) of this definition, having work-performing equipment that, while the motor vehicle is in transit, resides in or moves through the area that could be occupied by the horizontal member of the rear impact guard, as defined by the guard width, height and rear surface requirements of § 393.86(b)(1).

Split service brake system. A brake system consisting of two or more subsystems actuated by a single control designed so that a leakage-type failure of a pressure component in a single subsystem (except structural failure of a housing that is common to two or more subsystems) shall not impair the operation of any other subsystem.

Steering wheel lash. The condition in which the steering wheel may be turned through some part of a revolution without associated movement of the front wheels.

Stop lamps. Lamps shown to the rear of a motor vehicle to indicate that the service brake system is engaged.

Tail lamps. Lamps used to designate the rear of a motor vehicle.

Tiedown. A combination of securing devices which forms an assembly that attaches articles of cargo to, or restrains articles of cargo on, a vehicle or trailer, and is attached to anchor point(s).

Tow bar. A strut or column-like device temporarily attached between the rear of a towing vehicle and the front of the vehicle being towed.

Tractor-pole trailer. A combination vehicle that carries logs lengthwise so that they form the body of the vehicle. The logs are supported by a bunk located on the rear of the tractor, and another bunk on the skeletal trailer. The tractor bunk may rotate about a vertical axis, and the trailer may have a fixed, scoping, or cabled reach, or other mechanical freedom, to allow it to turn.

Trailer kingpin. A pin (with a flange on its lower end) which extends vertically from the front of the underside of a semitrailer and which locks into a fifth wheel.

Turn signals. Lamps used to indicate a change in direction by emitting a flashing light on the side of a motor vehicle towards which a turn will be made.

Upper coupler assembly. A structure consisting of an upper coupler plate, king-pin and supporting framework which interfaces with and couples to a fifth wheel.

Upper coupler plate. A plate structure through which the king-pin neck and collar extend. The bottom surface of the plate contacts the fifth wheel when coupled.

Vacuum brake system. A system that uses a vacuum and atmospheric pressure for transmitting a force from the driver control to the service brake, not including a system that uses vacuum only to assist the driver in applying muscular force to hydraulic or mechanical components.

Void filler. Material used to fill a space between articles of cargo and the structure of the vehicle that has sufficient strength to prevent movement of the articles of cargo.

Well. The depression formed between two cylindrical articles of cargo when they are laid with their eyes horizontal and parallel against each other.

Wheels back vehicle. (1) A trailer or semitrailer manufactured on or after January 26, 1998, whose rearmost axle is permanently fixed and is located such that the rearmost surface of the tires (of the size recommended by the vehicle manufacturer for the rear axle) is not more than 305 mm (12 inches) forward of the transverse vertical plane tangent to the rear extremity of the vehicle.

(2) A motor vehicle, not described by paragraph (1) of this definition, whose rearmost axle is permanently fixed and is located such that the rearmost surface of the tires (of the size recommended by the vehicle manufacturer for the rear axle) is not more than 610 mm (24 inches) forward of the transverse vertical plane tangent to the rear extremity of the vehicle.

Width of a manufactured home. The largest exterior width in the traveling mode, including any projections which contain interior space. Width does not include bay windows, roof projections, overhangs, or eaves under which there is no interior space.

Windshield. The principal forward facing glazed surface provided for forward vision in operating a motor vehicle.

Working load limit (WLL). The maximum load that may be applied to a component of a cargo securement system during normal service, usually assigned by the manufacturer of the component.

[53 FR 49384, Dec. 7, 1988, as amended at 63 FR 8339, Feb. 18, 1998; 63 FR 24465, May 4, 1998; 64 FR 47707, Sept. 1, 1999; 67 FR 61224, Sept. 27, 2002; 68 FR 56208, Sept. 30, 2003; 70 FR 48026, Aug. 15, 2005]

§ 393.7 Matter incorporated by reference.

(a) *Incorporation by reference*. Part 393 includes references to certain matter or materials, as listed in paragraph (b) of this section. The text of the materials is not included in the regulations

contained in part 393. The materials are hereby made a part of the regulations in part 393. The Director of the Federal Register has approved the materials incorporated by reference in accordance with 5 U.S.C. 552(a) and 1 CFR part 51. For materials subject to change, only the specific version approved by the Director of the Federal Register and specified in the regulation are incorporated. Material is incorporated as it exists on the date of the approval and a notice of any change in these materials will be published in the FEDERAL REGISTER.

(b) *Matter or materials referenced in part 393.* The matter or materials listed in this paragraph are incorporated by reference in the corresponding sections noted.

(1) Auxiliary Upper Beam Lamps, Society of Automotive Engineers (SAE) J581, July 2004, incorporation by reference approved for § 393.24(b).

(2) Front Fog Lamp, SAE J583, August 2004, incorporation by reference approved for § 393.24(b).

(3) Stop Lamps for Use on Motor Vehicles Less Than 2032 mm in Overall Width, SAE J586, March 2000, incorporation by reference approved for § 393.25(c).

(4) Stop Lamps and Front- and Rear-Turn Signal Lamps for Use on Motor Vehicles 2032 mm or more in Overall Width, SAE J2261, January 2002, incorporated by reference approved for § 393.25 (c).

(5) Tail Lamps (Rear Position Lamps) for Use on Motor Vehicles Less Than 2032 mm in Overall Width, SAE J585, March 2000, incorporation by reference approved for § 393.25(c).

(6) Tail Lamps (Rear Position Lamps) for Use on Vehicles 2032 mm or More in Overall Width, SAE J2040, March 2002, incorporation by reference approved for § 393.25(c).

(7) Turn Signal Lamps for Use on Motor Vehicles Less Than 2032 mm in Overall Width, SAE J588, March 2000, incorporation by reference approved for § 393.25(c).

(8) Sidemarker Lamps for Use on Road Vehicles Less Than 2032 mm in Overall Width, SAE J592, August 2000, incorporation by reference approved for § 393.25(c).

(9) Directional Flashing Optical Warning Devices for Authorized Emergency, Maintenance, and Service Vehicles, SAE J595, January 2005, incorporation by reference approved for § 393.25(e).

(10) Optical Warning Devices for Authorized Emergency, Maintenance, and Service Vehicles, SAE J845, May 1997, incorporation by reference approved for § 393.25(e).

(11) Gaseous Discharge Warning Lamp for Authorized Emergency, Maintenance, and Service Vehicles, SAE J1318, May 1998, incorporation by reference approved for § 393.25(e).

(12) Reflex Reflectors, SAE J594, December 2003, incorporation by reference approved for § 393.26(c).

(13) Standard Specification for Retroreflective Sheeting for Traffic Control, American Society of Testing and Materials, ASTM D 4956–04, 2004, incorporation by reference approved for § 393.26(c).

(14) Automobile, Truck, Truck-Tractor, Trailer, and Motor Coach Wiring, SAE J1292, October 1981, incorporated by reference approved for § 393.28.

(15) Long Stroke Air Brake Actuator Marking, SAE J1817, July 2001, incorporation by reference approved for § 393.47(e).

(16) American National Standard for Safety Glazing Materials for Glazing Motor Vehicles and Motor Vehicle Equipment Operating on Land Highways-Safety Standard, SAE Z26.1–1996, August 1997, incorporation by reference approved for § 393.62(d).

(17) Specification for Sound Level Meters, American National Standards Institute, S1.4–1983, incorporation by reference approved for § 393.94(c).

(18) Standard Specification for Strapping, Flat Steel and Seals, American Society for Testing and Materials (ASTM), D3953–97, February 1998, incorporation by reference approved for § 393.104(e).

(19) Welded Steel Chain Specifications, National Association of Chain Manufacturers, November 15, 1999, incorporation by reference approved for § 393.104(e).

(20) Recommended Standard Specification for Synthetic Web Tiedowns, Web Sling and Tiedown Association,

WSTDA-T1, 1998, incorporation by reference approved for § 393.104(e).

(21) Wire Rope Users Manual, 2nd Edition, Wire Rope Technical Board November 1985, incorporation by reference approved for § 393.104(e).

(22) Cordage Institute rope standards approved for incorporation into § 393.104(e):

(i) PETRS–2, Polyester Fiber Rope, 3-Strand and 8-Strand Constructions, January 1993;

(ii) PPRS–2, Polypropylene Fiber Rope, 3-Strand and 8-Strand Constructions, August 1992;

(iii) CRS–1, Polyester/Polypropylene Composite Rope Specifications, Three-Strand and Eight-Strand Standard Construction, May 1979;

(iv) NRS–1, Nylon Rope Specifications, Three-Strand and Eight-Strand Standard Construction, May 1979; and

(v) C–1, Double Braided Nylon Rope Specifications DBN, January 1984.

(c) *Availability*. The materials incorporated by reference are available as follows:

(1) Standards of the Underwriters Laboratories, Inc. Information and copies may be obtained by writing to: Underwriters Laboratories, Inc., 333 Pfingsten Road, Northbrook, Illinois 60062.

(2) Specifications of the American Society for Testing and Materials. Information and copies may be obtained by writing to: American Society for Testing and Materials, 100 Barr Harbor Drive, West Conshohocken, Pennsylvania 19428–2959.

(3) Specifications of the National Association of Chain Manufacturers. Information and copies may be obtained by writing to: National Association of Chain Manufacturers, P.O. Box 22681, Lehigh Valley, Pennsylvania 18002–2681.

(4) Specifications of the Web Sling and Tiedown Association. Information and copies may be obtained by writing to: Web Sling and Tiedown Association, Inc., 5024–R Campbell Boulevard, Baltimore, Maryland 21236–5974.

(5) Manuals of the Wire Rope Technical Board. Information and copies may be obtained by writing to: Wire Rope Technical Committee, P.O. Box 849, Stevensville, Maryland 21666.

(6) Standards of the Cordage Institute. Information and copies may be obtained by writing to: Cordage Institute, 350 Lincoln Street, # 115, Hingham, Massachusetts 02043.

(7) Standards of the Society of Automotive Engineers (SAE). Information and copies may be obtained by writing to: Society of Automotive Engineers, Inc., 400 Commonwealth Drive, Warrendale, Pennsylvania 15096.

(8) Standards of the American National Standards Institute (ANSI). Information and copies may be obtained by writing to: American National Standards Institute, 25 West 43rd Street, New York, New York 10036.

(9) [Reserved].

(10) All of the materials incorporated by reference are available for inspection at:

(i) The Federal Motor Carrier Safety Administration, Office of Bus and Truck Standards and Operations, 400 Seventh Street, SW., Washington, DC 20590; and

(ii) The National Archives and Records Administration (NARA). For information on the availability of this material at NARA, call 202–741–6030, or go to: *http://www.archives.gov/federal_register/code_of_federal_regulations/ibr_locations.html*.

[67 FR 61225, Sept. 27, 2002, as amended at 70 FR 48027, Aug. 15, 2005]

Subpart B—Lamps, Reflective Devices, and Electrical Wiring

§ 393.9 Lamps operable, prohibition of obstructions of lamps and reflectors.

(a) All lamps required by this subpart shall be capable of being operated at all times. This paragraph shall not be construed to require that any auxiliary or additional lamp be capable of operating at all times.

(b) Lamps and reflective devices/material required by this subpart must not be obscured by the tailboard, or by any part of the load, or its covering by dirt, or other added vehicle or work equipment, or otherwise. Exception: The conspicuity treatments on the front end protection devices may be obscured by part of the load being transported.

[70 FR 48027, Aug. 15, 2005]

§ 393.11 Lamps and reflective devices.

(a)(1) *Lamps and reflex reflectors.* Table 1 specifies the requirements for lamps, reflective devices and associated equipment by the type of commercial motor vehicle. The diagrams in this section illustrate the position of the lamps, reflective devices and associated equipment specified in Table 1. All commercial motor vehicles manufactured on or after December 25, 1968, must, at a minimum, meet the applicable requirements of 49 CFR 571.108 (FMVSS No. 108) in effect at the time of manufacture of the vehicle. Commercial motor vehicles manufactured before December 25, 1968, must, at a minimum, meet the requirements of subpart B of part 393 in effect at the time of manufacture.

(2) *Exceptions:* Pole trailers and trailer converter dollies must meet the part 393 requirements for lamps, reflective devices and electrical equipment in effect at the time of manufacture. Trailers which are equipped with conspicuity material which meets the requirements of § 393.11(b) are not required to be equipped with the reflex reflectors listed in Table 1 if—

(i) The conspicuity material is placed at the locations where reflex reflectors are required by Table 1; and

(ii) The conspicuity material when installed on the motor vehicle meets the visibility requirements for the reflex reflectors.

(b) *Conspicuity Systems.* Each trailer of 2,032 mm (80 inches) or more overall width, and with a GVWR over 4,536 kg (10,000 pounds), manufactured on or after December 1, 1993, except pole trailers and trailers designed exclusively for living or office use, shall be equipped with either retroreflective sheeting that meets the requirements of FMVSS No. 108 (S5.7.1), reflex reflectors that meet the requirements FMVSS No. 108 (S5.7.2), or a combination of retroreflective sheeting and reflex reflectors that meet the requirements of FMVSS No. 108 (S5.7.3). The conspicuity system shall be installed and located as specified in FMVSS No. 108 [S5.7.1.4 (for retroreflective sheeting), S5.7.2.2 (for reflex reflectors), S5.7.3 (for a combination of sheeting and reflectors)] and have certification and markings as required by S5.7.1.5 (for retroreflective tape) and S5.7.2.3 (for reflex reflectors).

(c) *Prohibition on the use of amber stop lamps and tail lamps.* No commercial motor vehicle may be equipped with an amber stop lamp, a tail lamp, or other lamp which is optically combined with an amber stop lamp or tail lamp.

(d) *Prohibition on the use of auxiliary lamps that supplement the identification lamps.* No commercial motor vehicle may be equipped with lamps that are in a horizontal line with the required identification lamps unless those lamps are required by this regulation.

TABLE 1.—REQUIRED LAMPS AND REFLECTORS ON COMMERCIAL MOTOR VEHICLES

Item on the vehicle	Quantity	Color	Location	Position	Height above the road surface in millimeters (mm) (with English units in parenthesis) measured from the center of the lamp at curb weight	Vehicles for which the devices are required
Headlamps	2	White	Front	On the front at the same height, with an equal number at each side of the vertical center line as far apart as practicable.	Not less than 559 mm (22 inches) nor more than 1,372 mm (54 inches).	A, B, C
Turn signal (front). See footnotes #2 and 12.	2	Amber	At or near the front.	One on each side of the vertical centerline at the same height and as far apart as practicable.	Not less than 381 mm (15 inches) nor more than 2,108 mm (83 inches).	A, B, C
Identification lamps (front). See footnote #1.	3	Amber	Front	As close as practicable to the top of the vehicle, at the same height, and as close as practicable to the vertical centerline of the vehicle (or the vertical centerline of the cab where different from the centerline of the vehicle) with lamp centers spaced not less than 152 mm (6 inches) or more than 305 mm (12 inches) apart. Alternatively, the front lamps may be located as close as practicable to the top of the cab.	All three on the same level as close as practicable to the top of the motor vehicle.	B, C
Tail lamps. See footnotes #5 and 11	2	Red	Rear	One lamp on each side of the vertical centerline at the same height and as far apart as practicable.	Both on the same level between 381 mm (15 inches) and 1,829 mm (72 inches).	A, B, C, D, E, F, G, H

TABLE 1.—REQUIRED LAMPS AND REFLECTORS ON COMMERCIAL MOTOR VEHICLES

Item on the vehicle	Quantity	Color	Location	Position	Height above the road surface in millimeters (mm) (with English units in parenthesis) measured from the center of the lamp at curb weight	Vehicles for which the devices are required
Stop lamps. See footnotes #5 and 13	2	Red	Rear	One lamp on each side of the vertical centerline at the same height and as far apart as practicable.	Both on the same level between 381 mm (15 inches) and 1,829 mm (72 inches).	A, B, C, D, E, F, G
Clearance lamps. See footnotes #8, 9, 10, 15 & 17.	2	Amber	One on each side of the front of the vehicle.	One on each side of the vertical centerline to indicate overall width.	Both on the same level as high as practicable.	B, C, D, G, H
	2	Red	One on each side of the rear of the vehicle.	One on each side of the vertical centerline to indicate overall width.	Both on the same level as high as practicable.	B, D, G, H
Reflex reflector, intermediate (side)	2	Amber	One on each side.	At or near the midpoint between the front and rear side marker lamps, if the length of the vehicle is more than 9,144 mm (30 feet).	Between 381 mm (15inches) and 1,524 (60 inches).	A, B, D, F, G
Reflex reflector (rear). See footnotes #5, 6, and 8.	2	Red	Rear	One on each side of the vertical centerline, as far apart as practicable and at the same height.	Both on the same level, between 381 mm (15 inches) and 1,524 mm (60 inches).	A, B, C, D, E, F, G
Reflex reflector (rear side).	2	Red	One on each side (rear).	As far to the rear as practicable.	Both on the same level, between 381 mm (15 inches) and 1,524 mm (60 inches).	A, B, D, F, G
Reflex reflector (front side). See footnote #16.	2	Amber	One on each side (front).	As far to the front as practicable.	Between 381 mm (15 inches) and 1,524 mm (60 inches).	A, B, C, D, F, G
License plate lamp (rear). See footnote #11.	1	White	At rear license plate to illuminate the plate from the top or sides.		No requirements	A, B, C, D, F, G
Side marker lamp (front). See footnote #16.	2	Amber	One on each side.	As far to the front as practicable.	Not less than 381 mm (15 inches).	A, B, C, D, F

Side marker lamp intermediate	2	Amber	One on each side.	At or near the midpoint between the front and rear side marker lamps, if the length of the vehicle is more than 9,144 mm (30 feet).	Not less tan 381 mm (15 inches).	A, B, D, F, G
Side marker lamp (rear). See footnotes #4 and 8.	2	Red	One on each side.	As far to the rear as practicable.	Not less than 381 mm (15 inches), and on the rear of trailers not more than 1,524 mm (60 inches).	A, B, D, F, G
Turn signal (rear). See footnotes #5 and 12.	2	Amber or red	Rear	One lamp on each side of the vertical centerline as far apart as practicable.	Both on the same level, between 381 mm (15 inches) and 2,108 mm (83 inches).	A, B, C, D, E, F, G
Identification lamp (rear). See footnotes #3, 7, and 15.	3	Red	Rear	One as close as practicable to the vertical centerline. One on each side with lamp centers spaced not less than 152 mm (6 inches) or more than 305 mm (12 inches) apart.	All three on the same level as close as practicable to the top of the vehicle.	B, D, G
Vehicular hazard warning signal flasher lamps. See footnotes #5 and 12.	2	Amber	Front	One lamp on each side of the vertical centerline, as far apart as practicable.	Both on the same level, between 381 mm (15 inches) and 2,108 mm (83 inches).	A, B, C
	2	Amber or red	Rear	One lamp on each side of the vertical centerline, as far apart as practicable.	Both on the same level, between 381 mm (15 inches) and 2,108 mm (83 inches).	A, B, C, D, E, F, G
Backup lamp. See footnote #14	1 or 2	White	Rear	Rear	No requirement	A, B, C
Parking lamp	2	Amber or white	Front	One lamp on each side of the vertical centerline, as far apart as practicable.	Both on the same level, between 381 mm (15 inches) and 2,108 mm (83 inches).	A

Legend: Types of commercial motor vehicles shown in the last column of Table 1.
A. Buses and trucks less than 2,032 mm (80 inches) in overall width.
B. Buses and trucks 2,032 mm (80 inches) or more in overall width.
C. Truck tractors.
D. Semitrailers and full trailers 2,032 mm (80 inches) or more in overall width except converter dollies.
E. Converter dolly.
F. Semitrailers and full trailers less than 2,032 mm (80 inches) in overall width.
G. Pole trailers.
H. Projecting loads.

Note: Lamps and reflectors may be combined as permitted by § 393.22 and S5.4 of 49 CFR 571.108, Equipment combinations.

Footnote—1 Identification lamps may be mounted on the vertical centerline of the cab where different from the centerline of the vehicle, except where the cab is not more than 42 inches wide at the front roofline, then a single lamp at the center of the cab shall be deemed to comply with the requirements for identification lamps. No part of the identification lamps or their mountings may extend below the top of the vehicle windshield.

Footnote—2 Unless the turn signals on the front are so constructed (double-faced) and located as to be visible to passing drivers, two turn signals are required on the rear of the truck tractor, one at each side as far apart as practicable.

Footnote—3 The identification lamps need not be visible or lighted if obscured by a vehicle in the same combination.

Footnote—4 Any semitrailer or full trailer manufactured on or after March 1, 1979, shall be equipped with rear side-marker lamps at a height of not less than 381 mm (15 inches), and on the rear of trailers not more than 1,524 mm (60 inches) above the road surface, as measured from the center of the lamp on the vehicle at curb weight.

Footnote—5 Each converter dolly, when towed singly by another vehicle and not as part of a full trailer, shall be equipped with one stop lamp, one tail lamp, and two reflectors (one on each side of the vertical centerline, as far apart as practicable) on the rear. Each converter dolly shall be equipped with rear turn signals and vehicular hazard warning signal flasher lamps when towed singly by another vehicle and not as part of a full trailer, if the converter dolly obscures the turn signals at the rear of the towing vehicle.

Footnote—6 Pole trailers shall be equipped with two reflex reflectors on the rear, one on each side of the vertical centerline as far apart as practicable, to indicate the extreme width of the trailer.

Footnote—7 Pole trailers, when towed by motor vehicles with rear identification lamps meeting the requirements of § 393.11 and mounted at a height greater than the load being transported on the pole trailer, are not required to have rear identification lamps.

Footnote—8 Pole trailers shall have on the rearmost support for the load: (1) two front clearance lamps, one on each side of the vehicle, both on the same level and as high as practicable to indicate the overall width of the pole trailer; (2) two rear clearance lamps, one on each side of the vehicle, both on the same level and as high as practicable to indicate the overall width of the pole trailer; (3) two rear side marker lamps, one on each side of the vehicle, both on the same level, not less than 375 mm (15 inches) above the road surface; (4) two rear reflex reflectors, one on each side, both on the same level, not less than 375 mm (15 inches) above the road surface to indicate maximum width of the pole trailer; and (5) one red reflector on each side of the rearmost support for the load. Lamps and reflectors may be combined as allowed in § 393.22.

Footnote—9 Any motor vehicle transporting a load which extends more than 102 mm (4 inches) beyond the overall width of the motor vehicle shall be equipped with the following lamps in addition to other required lamps when operated during the hours when headlamps are required to be used.

(1) The foremost edge of that portion of the load which projects beyond the side of the vehicle shall be marked (at its outermost extremity) with an amber lamp visible from the front and side.

(2) The rearmost edge of that portion of the load which projects beyond the side of the vehicle shall be marked (at its outermost extremity) with a red lamp visible from the rear and side.

(3) If the projecting load does not measure more than 914 mm (3 feet) from front to rear, it shall be marked with an amber lamp visible from the front, both sides, and rear, except that if the projection is located at or near the rear it shall be marked by a red lamp visible from front, side, and rear.

Footnote—10 Projections beyond rear of motor vehicles. Motor vehicles transporting loads which extend more than 1,219 mm (4 feet) beyond the rear of the motor vehicle, or which have tailboards or tailgates extending more than 1,219 mm (4 feet) beyond the body, shall have these projections marked as follows when the vehicle is operated during the hours when headlamps are required to be used:

(1) On each side of the projecting load, one red side marker lamp, visible from the side, located so as to indicate maximum overhang.

(2) On the rear of the projecting load, two red lamps, visible from the rear, one at each side; and two red reflectors visible from the rear, one at each side, located so as to indicate maximum width.

Footnote—11 To be illuminated when tractor headlamps are illuminated.

Footnote—12 Every bus, truck, and truck tractor shall be equipped with a signaling system that, in addition to signaling turning movements, shall have a switch or combination of switches that will cause the two front turn signals and the two rear signals to flash simultaneously as a vehicular traffic signal warning, required by § 392–22(a). The system shall be capable of flashing simultaneously with the ignition of the vehicle on or off.

Footnote—13 To be actuated upon application of service brakes.

Footnote—14 Backup lamp required to operate when bus, truck, or truck tractor is in reverse.

Footnote—15

(1) For the purposes of Section 393.11, the term ''overall width'' refers to the nominal design dimension of the widest part of the vehicle, exclusive of the signal lamps, marker lamps, outside rearview mirrors, flexible fender extensions, and mud flaps.

(2) Clearance lamps may be mounted at a location other than on the front and rear if necessary to indicate the overall width of a vehicle, or for protection from damage during normal operation of the vehicle.

(3) On a trailer, the front clearance lamps may be mounted at a height below the extreme height if mounting at the extreme height results in the lamps failing to mark the overall width of the trailer.

(4) On a truck tractor, clearance lamps mounted on the cab may be located to indicate the width of the cab, rather than the width of the vehicle.

(5) When the rear identification lamps are mounted at the extreme height of a vehicle, rear clearance lamps are not required to be located as close as practicable to the top of the vehicle.

Footnote—16 A trailer subject to this part that is less than 1829 mm (6 feet) in overall length, including the trailer tongue, need not be equipped with front side marker lamps and front side reflex reflectors.

Footnote—17 A boat trailer subject to this part whose overall width is 2032 mm (80 inches) or more need not be equipped with both front and rear clearance lamps provided an amber (front) and red (rear) clearance lamp is located at or near the midpoint on each side so as to indicate its extreme width.

Figure 1 - Truck Tractor Illustration for § 393.11

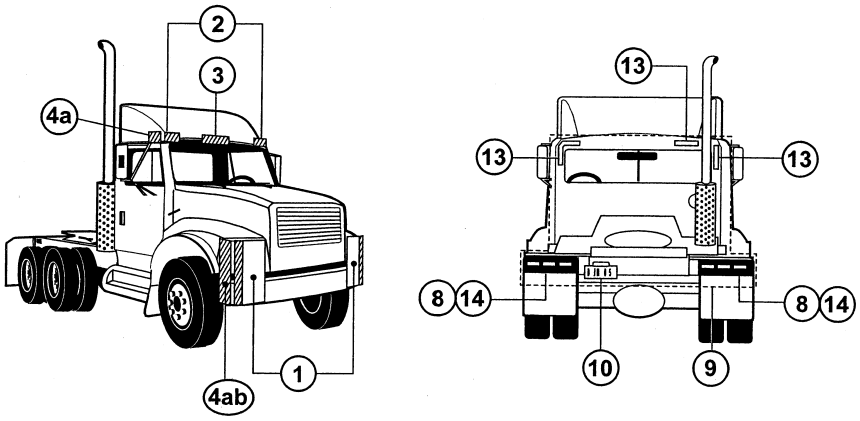

Figure 2 - Straight Truck Illustration for § 393.11

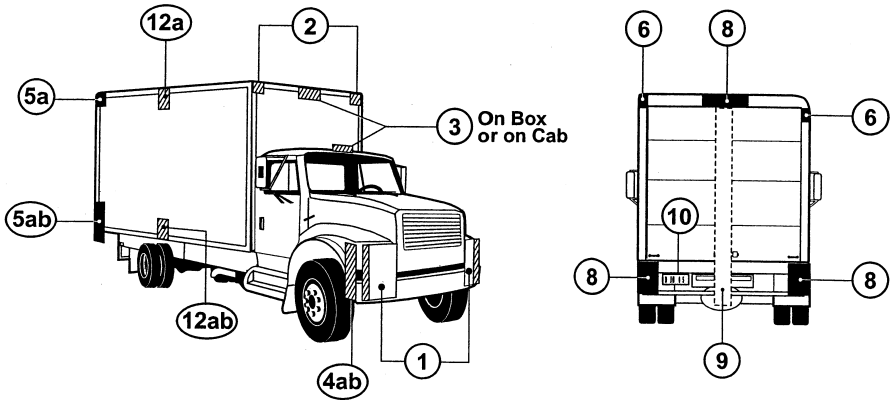

Figure 3 - Straight Truck Illustration for § 393.11

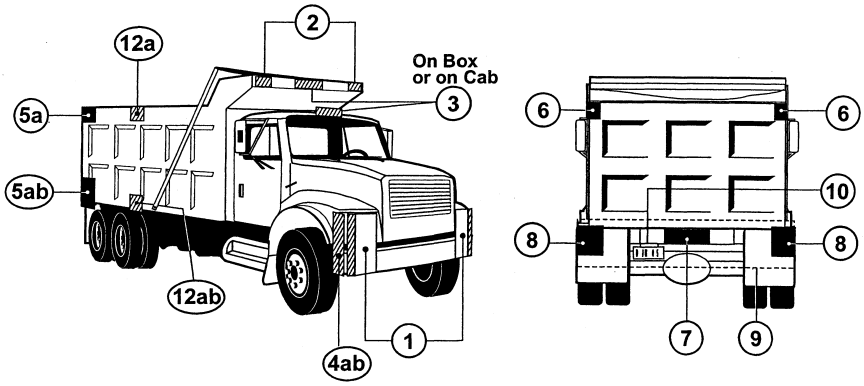

Figure 4 - Straight Truck Illustration for § 393.11

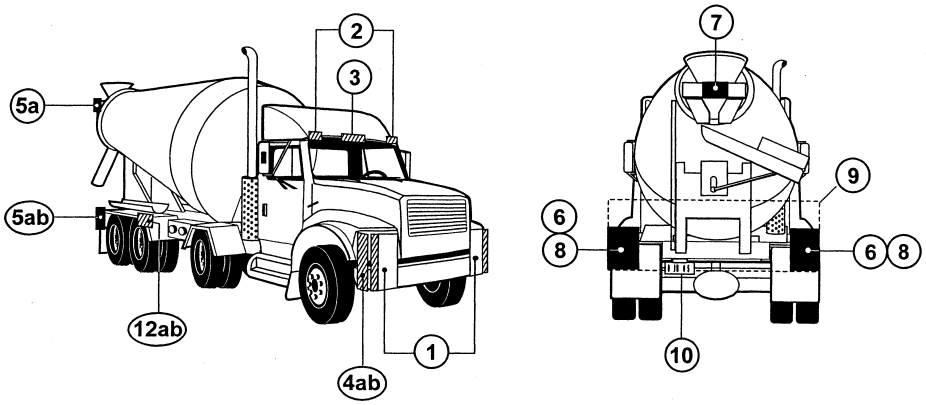

Figure 5 - Straight Truck Illustration for § 393.11

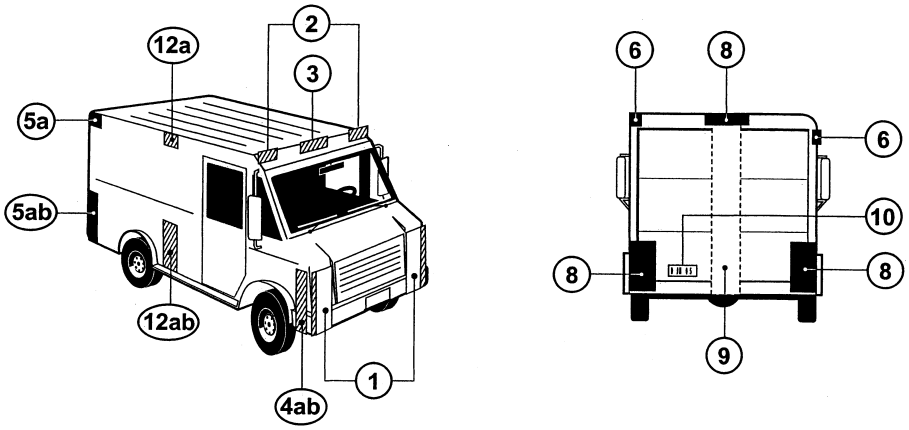

Figure 6 - Straight Truck Illustration for § 393.11

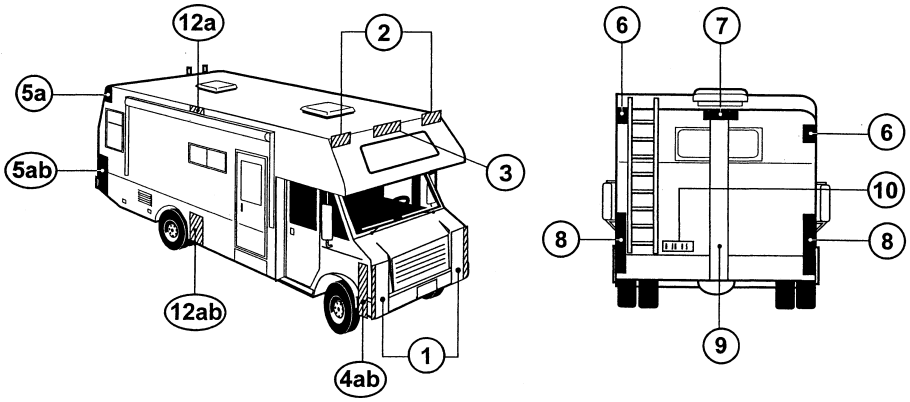

Figure 7 - Bus Illustration for § 393.11

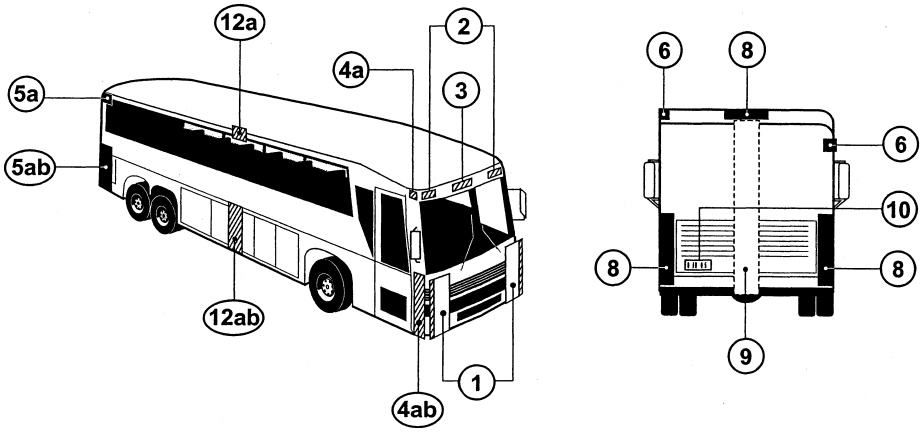

LEGEND FOR FIGURES 1 THROUGH 7 - 49 CFR 393.11
TRUCK & BUS VEHICLE ILLUSTRATIONS
(DOES NOT APPLY TO FIGURES 8 THROUGH 18 FOR TRAILERS)

Area	Equipment
1	Headlamps - Lower Beam
	Headlamps - Upper Beam
	Parking Lamps - Attention: *Required only on vehicles less than 2032mm wide*
	Front Turn Signal/Hazard Warning Lamps
2	Front Clearance Lamps - Attention: *Required for vehicles 2032mm wide or wider*
3	Front Identification Lamps (ID)
4a	Front Side Marker Lamps
4b	Front Side Reflex Reflectors
5a	Rear Side Marker Lamps - *Not required on Truck Tractors*
5b	Rear Side Reflex Reflectors - *Not required on Truck Tractors*
6	Rear Clearance Lamps Attention: *Required for vehicles 2032mm wide or wider, but not required on Truck Tractors*
7	Rear Identification Lamps (ID) Attention: *Required for vehicles 2032mm wide or wider, but not required on Truck Tractors*
8	Tail Lamps
	Stop Lamps
	Rear Turn Signal/Hazard Warning Lamps
	Rear Reflex Reflectors
9	Backup Lamp
10	License Plate Lamp
11	Center High Mounted Stop Lamp Attention: *Required for vehicles less than 2032mm wide and 4536kg*

ADDITIONAL EQUIPMENT FOR SPECIFIC TRUCKS AND BUS VEHICLES

Area	Equipment
12a	Intermediate Side Marker Lamps
12b	Intermediate Side Reflex Relectors

TRUCK TRACTORS

	DESCRIPTION
Area	Conspicuity Treatment
13	Rear Upper Body Marking
14	Rear Marking

Figure 8 - Semi-Trailer Illustration for § 393.11

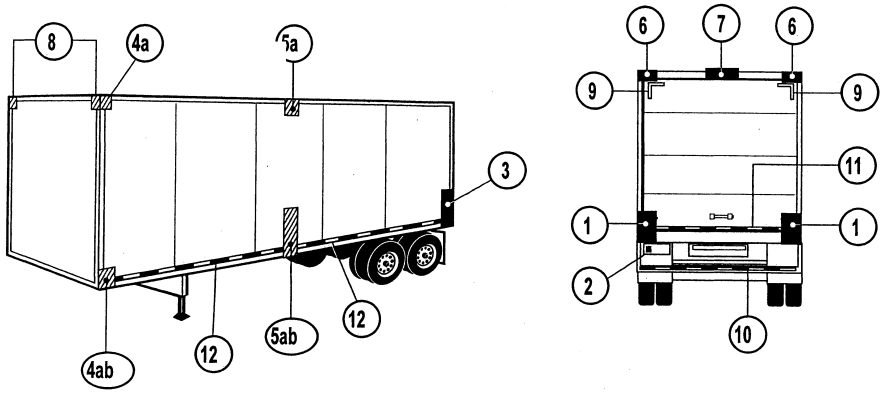

Figure 9 - Semi-Trailer Illustration for § 393.11

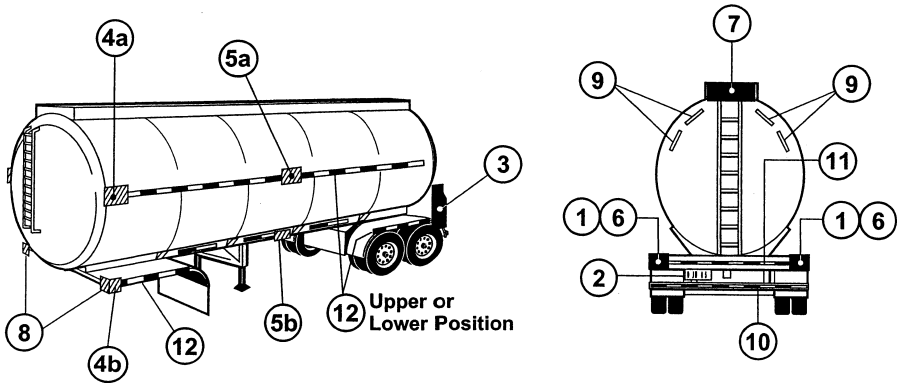

Figure 10 - Semi-Trailer Illustration for § 393.11

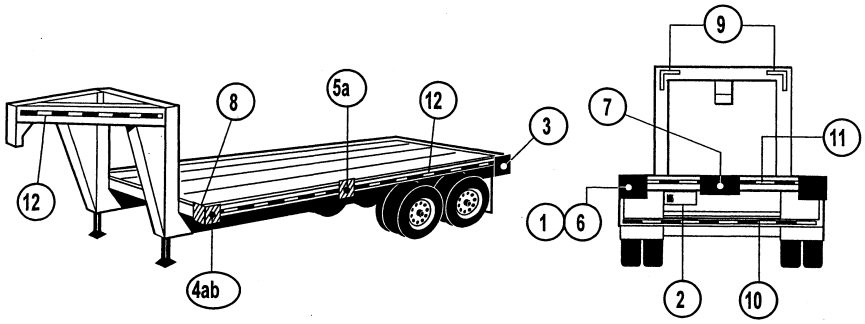

Figure 11 - Container Chassis Illustration for § 393.11

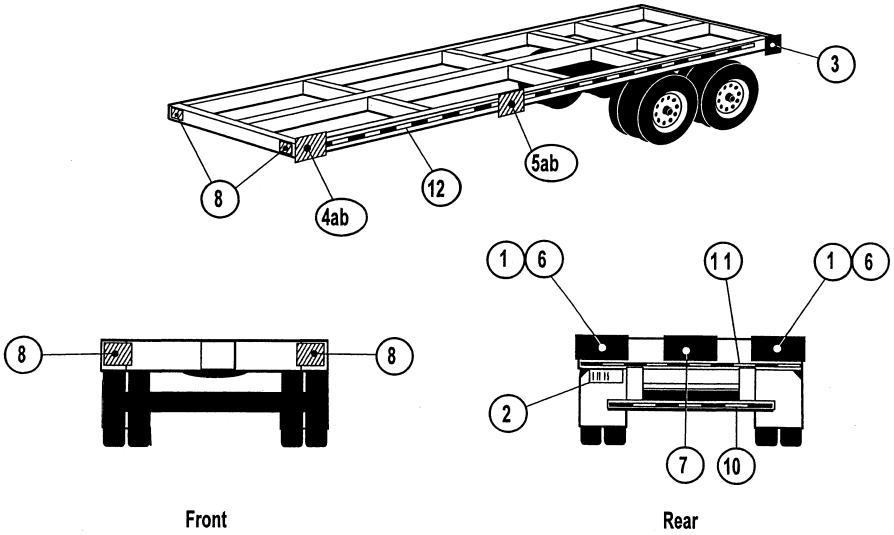

Figure 12 - Pole Trailer Illustration for § 393.11 - All Vehicle Widths

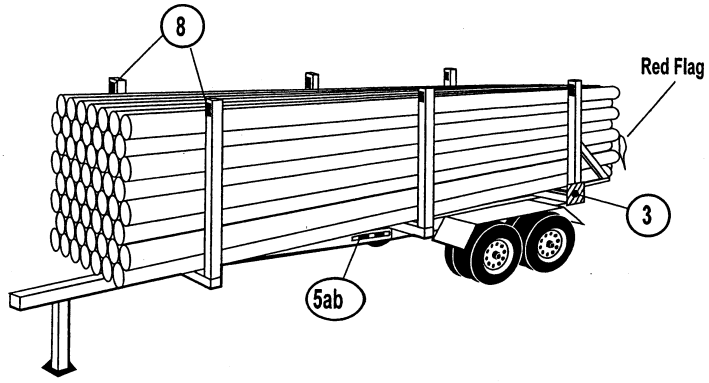

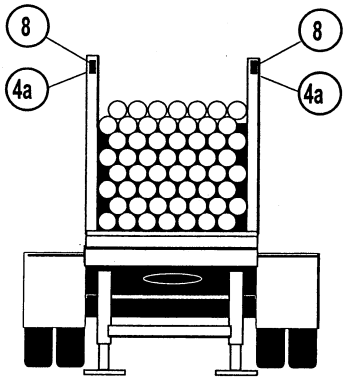

Front of Vehicle

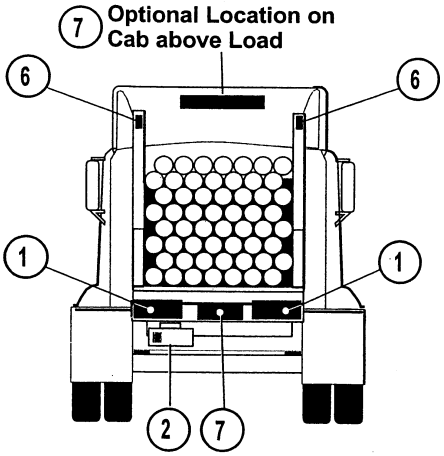

Rear of Vehicle (Including Truck Cab)

Figure 13 - Converter Dolly Illustration for § 393.11

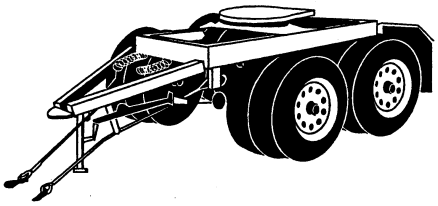

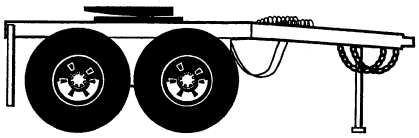

Side View of Dolly

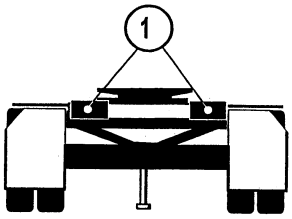

Rear

Figure 14 - Semi-Trailer Illustration for § 393.11

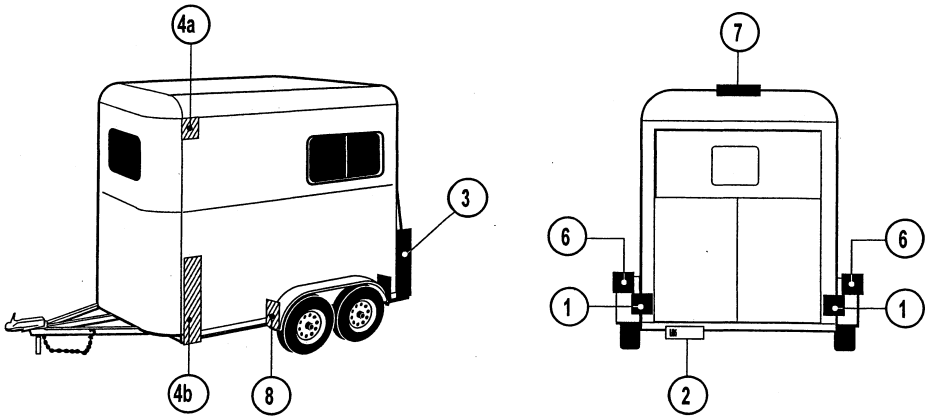

Figure 15 - Semi-Trailer Illustration for § 393.11

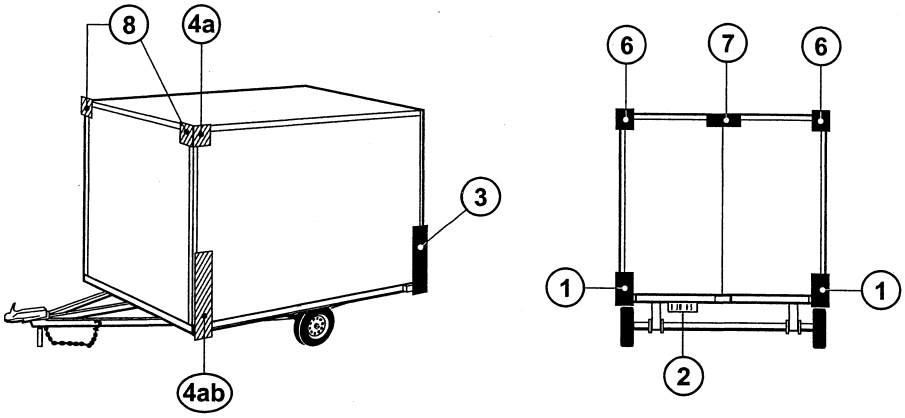

Figure 16 - Semi-Trailer Illustration for § 393.11

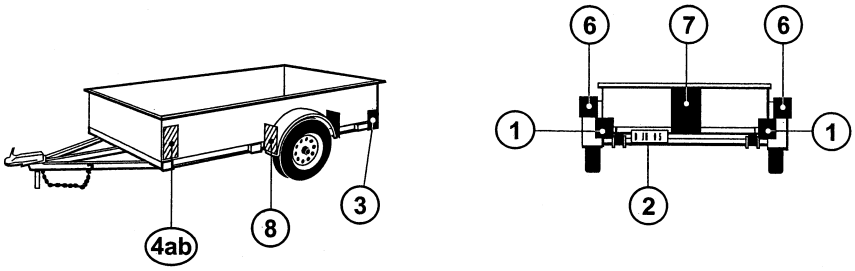

Figure 17 - Semi-Trailer Illustration for § 393.11

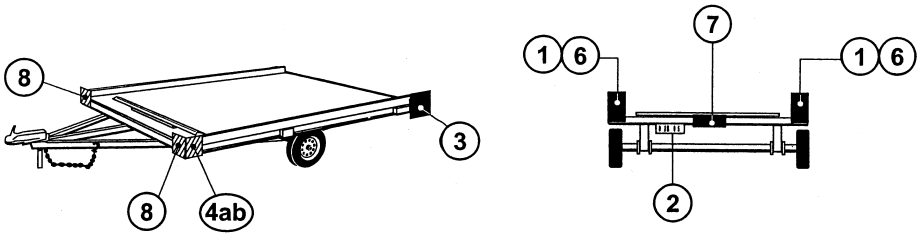

Figure 18 - Semi-Trailer Illustration for § 393.11

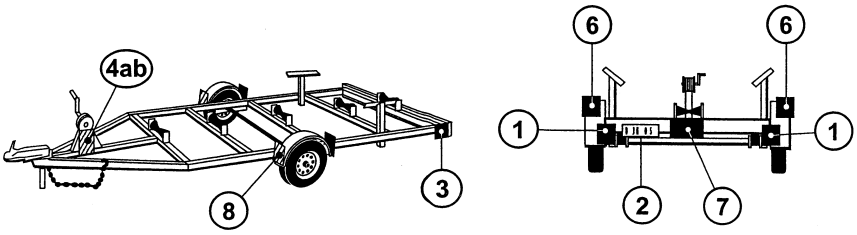

LEGEND FOR FIGURES 8 THROUGH 18 - 49 CFR 393.11 TRAILER ILLUSTRATIONS

(DOES NOT APPLY TO FIGURES 1 THROUGH 7 FOR TRUCKS & BUSES)

Area	Equipment
1	Tail Lamps
	Stop Lamps
	Rear Turn Signal Lamps
	Rear Reflex Reflectors
2	License Plate Lamp (s)
3	Rear Side Marker Lamps
	Rear Side Reflex Reflectors
4a	Front Side Marker Lamps
4b	Front Side Reflex Reflectors

ADDITIONAL EQUIPMENT FOR TRAILERS EXCEEDING THE FOLLOWING PARAMETERS

LENGTH 9.1 m (30 ft.) OR LONGER

Area	Equipment
5a	Intermediate Side Marker Lamps
5b	Intermediate Side Reflex Reflectors

WIDTH 2.032 m (80 in.) OR WIDER

Area	Equipment
6	Rear Clearance Lamps
7	Rear Identification Lamps
8	Front Clearance Lamps

WIDTH 2.032 m (80 in.) OR WIDER AND GVWR 4,536 kg (10,000 lb.) OR MORE

	DESCRIPTION
Area	Conspicuity Treatment
9	Rear Upper Body Marking
10	Bumper Bar Marking
11	Rear Lower Body Marking
12	Side Marking

[70 FR 48027, Aug. 15, 2005]

§ 393.13 Retroreflective sheeting and reflex reflectors, requirements for semitrailers and trailers manufactured before December 1, 1993.

(a) *Applicability*. All trailers and semitrailers manufactured prior to December 1, 1993, which have an overall width of 2,032 mm (80 inches) or more and a gross vehicle weight rating of 4,536 kg (10,001 pounds) or more, except trailers that are manufactured exclusively for use as offices or dwellings, pole trailers (as defined in § 390.5 of this subchapter), and trailers transported in a driveaway-towaway operation, must be equipped with retroreflective sheeting or an array of reflex reflectors that meet the requirements of this section. Motor carriers operating trailers, other than container chassis (as defined in § 393.5), have until June 1, 2001, to comply with the requirements of this section. Motor carriers operating container chassis have until December 1, 2001, to comply with the requirements of this section.

(b) *Retroreflective sheeting and reflex reflectors*. Motor carriers are encouraged to retrofit their trailers with a conspicuity system that meets all of the requirements applicable to trailers manufactured on or after December 1, 1993, including the use of retroreflective sheeting or reflex reflectors in a red and white pattern (see Federal Motor Vehicle Safety Standard No. 108 (49 CFR 571.108), S5.7, *Conspicuity systems*). Motor carriers which do not retrofit their trailers to meet the requirements of FMVSS No. 108, for example by using an alternative color pattern, must comply with the remainder of this paragraph and with paragraph (c) or (d) of this section. Retroreflective sheeting or reflex reflectors in colors or color combinations other than red and white may be used on the sides or lower rear area of the semitrailer or trailer until June 1, 2009. The alternate color or color combination must be uniform along the sides and lower rear area of the trailer. The retroreflective sheeting or reflex reflectors on the upper rear area of the trailer must be white and conform to the requirements of FMVSS No. 108 (S5.7). Red retroreflective sheeting or reflex reflectors shall not be used along the sides of the trailer unless it is used as part of a red and white pattern. Retroreflective sheeting shall have a width of at least 50 mm (2 inches).

(c) *Locations for retroreflective sheeting*—(1) *Sides*. Retroreflective sheeting shall be applied to each side of the trailer or semitrailer. Each strip of retroreflective sheeting shall be positioned as horizontally as practicable, beginning and ending as close to the front and rear as practicable. The strip need not be continuous but the sum of the length of all of the segments shall be at least half of the length of the trailer and the spaces between the segments of the strip shall be distributed as evenly as practicable. The centerline for each strip of retroreflective sheeting shall be between 375 mm (15 inches) and 1,525 mm (60 inches) above the road surface when measured with the trailer empty or unladen, or as close as practicable to this area. If necessary to clear rivet heads or other similar obstructions, 50 mm (2 inches) wide retroreflective sheeting may be separated into two 25 mm (1 inch) wide strips of the same length and color, separated by a space of not more than 25 mm (1 inch).

(2) *Lower rear area*. The rear of each trailer and semitrailer must be equipped with retroreflective sheeting. Each strip of retroreflective sheeting shall be positioned as horizontally as practicable, extending across the full width of the trailer, beginning and ending as close to the extreme edges as practicable. The centerline for each of the strips of retroreflective sheeting shall be between 375 mm (15 inches) and 1,525 mm (60 inches) above the road surface when measured with the trailer empty or unladen, or as close as practicable to this area.

(3) *Upper rear area*. Two pairs of white strips of retroreflective sheeting, each pair consisting of strips 300 mm (12 inches) long, must be positioned horizontally and vertically on the right and left upper corners of the rear of the body of each trailer and semitrailer, as close as practicable to the top of the trailer and as far apart as practicable. If the perimeter of the body, as viewed from the rear, is not square or rectangular, the strips may be applied along the perimeter, as close as practicable to the uppermost and outermost areas

of the rear of the body on the left and right sides.

(d) *Locations for reflex reflectors.*—(1) *Sides.* Reflex reflectors shall be applied to each side of the trailer or semitrailer. Each array of reflex reflectors shall be positioned as horizontally as practicable, beginning and ending as close to the front and rear as practicable. The array need not be continuous but the sum of the length of all of the array segments shall be at least half of the length of the trailer and the spaces between the segments of the strip shall be distributed as evenly as practicable. The centerline for each array of reflex reflectors shall be between 375 mm (15 inches) and 1,525 mm (60 inches) above the road surface when measured with the trailer empty or unladen, or as close as practicable to this area. The center of each reflector shall not be more than 100 mm (4 inches) from the center of each adjacent reflector in the segment of the array. If reflex reflectors are arranged in an alternating color pattern, the length of reflectors of the first color shall be as close as practicable to the length of the reflectors of the second color.

(2) *Lower rear area.* The rear of each trailer and semitrailer must be equipped with reflex reflectors. Each array of reflex reflectors shall be positioned as horizontally as practicable, extending across the full width of the trailer, beginning and ending as close to the extreme edges as practicable. The centerline for each array of reflex reflectors shall be between 375 mm (15 inches) and 1,525 mm (60 inches) above the road surface when measured with the trailer empty or unladen, or as close as practicable to this area. The center of each reflector shall not be more than 100 mm (4 inches) from the center of each adjacent reflector in the segment of the array.

(3) *Upper rear area.* Two pairs of white reflex reflector arrays, each pair at least 300 mm (12 inches) long, must be positioned horizontally and vertically on the right and left upper corners of the rear of the body of each trailer and semitrailer, as close as practicable to the top of the trailer and as far apart as practicable. If the perimeter of the body, as viewed from the rear, is not square or rectangular, the arrays may be applied along the perimeter, as close as practicable to the uppermost and outermost areas of the rear of the body on the left and right sides. The center of each reflector shall not be more than 100 mm (4 inches) from the center of each adjacent reflector in the segment of the array.

[64 FR 15605, Mar. 31, 1999, as amended at 66 FR 30339, June 6, 2001]

§ 393.17 Lamps and reflectors—combinations in driveaway-towaway operation.

A combination of motor vehicles engaged in driveaway-towaway operation must be equipped with operative lamps and reflectors conforming to the rules in this section.

(a) The towing vehicle must be equipped as follows:

(1) On the front, there must be at least two headlamps, an equal number at each side, two turn signals, one at each side, and two clearance lamps, one at each side.

(2) On each side, there must be at least one side-marker lamp, located near the front of the vehicle.

(3) On the rear, there must be at least two tail lamps, one at each side, and two stop lamps, one at each side.

(b) Except as provided in paragraph (c) of this section, the rearmost towed vehicle of the combination (including the towed vehicle or a tow-bar combination, the towed vehicle of a single saddle-mount combination, and the rearmost towed vehicle of a double or triple saddle-mount combination) or, in the case of a vehicle full-mounted on a saddle-mount vehicle, either the full-mounted vehicle or the rearmost saddle-mounted vehicle must be equipped as follows:

(1) On each side, there must be at least one side-marker lamp, located near the rear of the vehicle.

(2) On the rear, there must be at least two tail lamps, two stop lamps, two turn signals, two clearance lamps, and two reflectors, one of each type at each side. In addition, if any vehicle in the combination is 80 inches or more in overall width, there must be three identification lamps on the rear.

(c) If the towed vehicle in a combination is a mobile structure trailer, it must be equipped in accordance with

the following lighting devices. For the purposes of this part, *mobile structure trailer* means a trailer that has a roof and walls, is at least 10 feet wide, and can be used off road for dwelling or commercial purposes.

(1) When the vehicle is operated in accordance with the terms of a special permit prohibiting operation during the times when lighted lamps are required under § 392.30, it must have on the rear—

(i) Two stop lamps, one on each side of the vertical centerline, at the same height, and as far apart as practicable;

(ii) Two tail lamps, one on each side of the vertical centerline, at the same height, and as far apart as practicable;

(iii) Two red reflex reflectors, one on each side of the vertical centerline, at the same height, and as far apart as practicable; and

(iv) Two turn signal lamps, one on each side of the vertical centerline, at the same height, and as far apart as practicable.

(2) At all other times, the vehicle must be equipped as specified in paragraph (b) of this section.

(d) An intermediate towed vehicle in a combination consisting of more than two vehicles (including the first saddle-mounted vehicle of a double saddle-mount combination and the first and second saddle-mount vehicles of a triple saddle-mount combination) must have one side-marker lamp on each side, located near the rear of the vehicle.

Figure 19 - Single-Saddle-Mount Diagram to Illustrate § 393.17

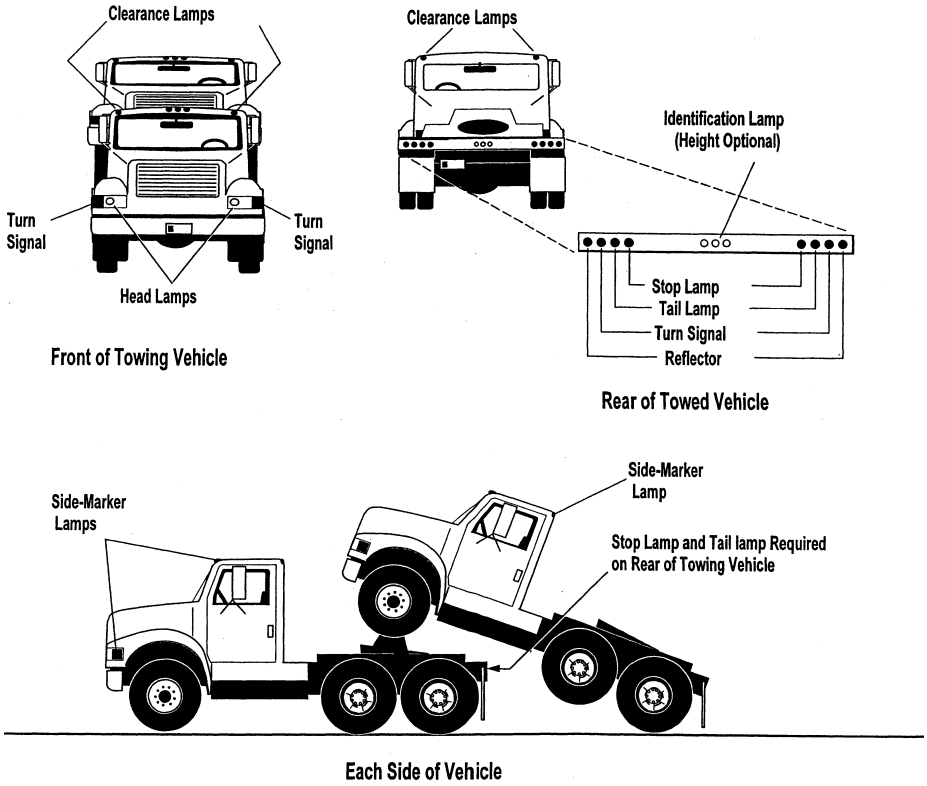

Lamps may be combined as permitted by § 393.22. The color of exterior lighting devices and reflectors shall conform to requirements of § 393.11

Figure 20 - Double-Saddle-Mount Diagram to Illustrate § 393.17

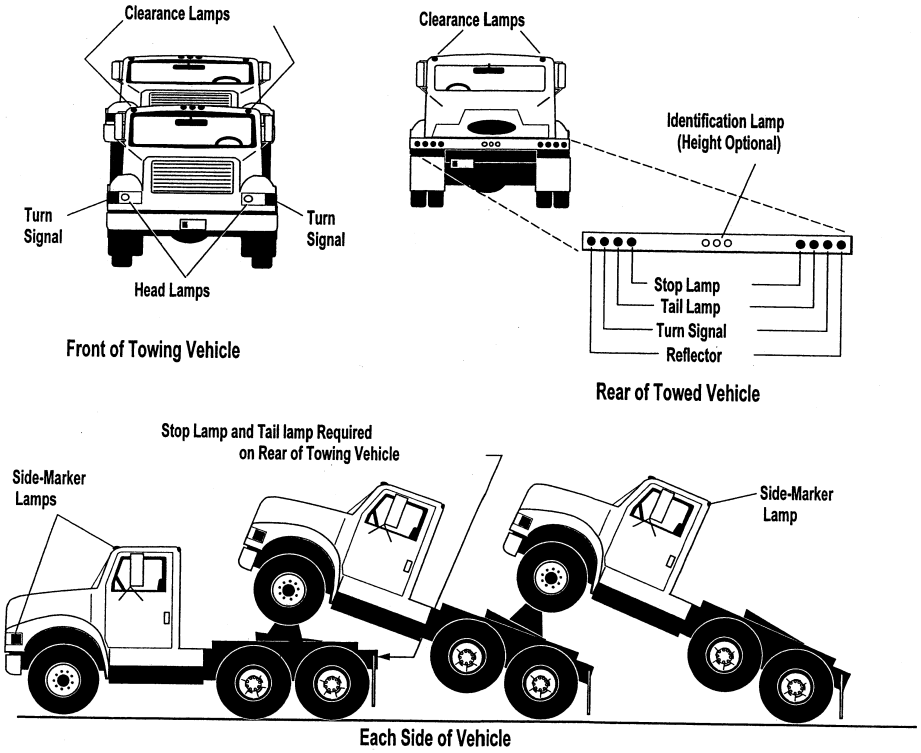

Lamps may be combined as permitted by § 393.22. The color of exterior lighting devices and reflectors shall conform to requirements of § 393.11

Figure 21 - Tow-bar Diagram to Illustrate § 393.17

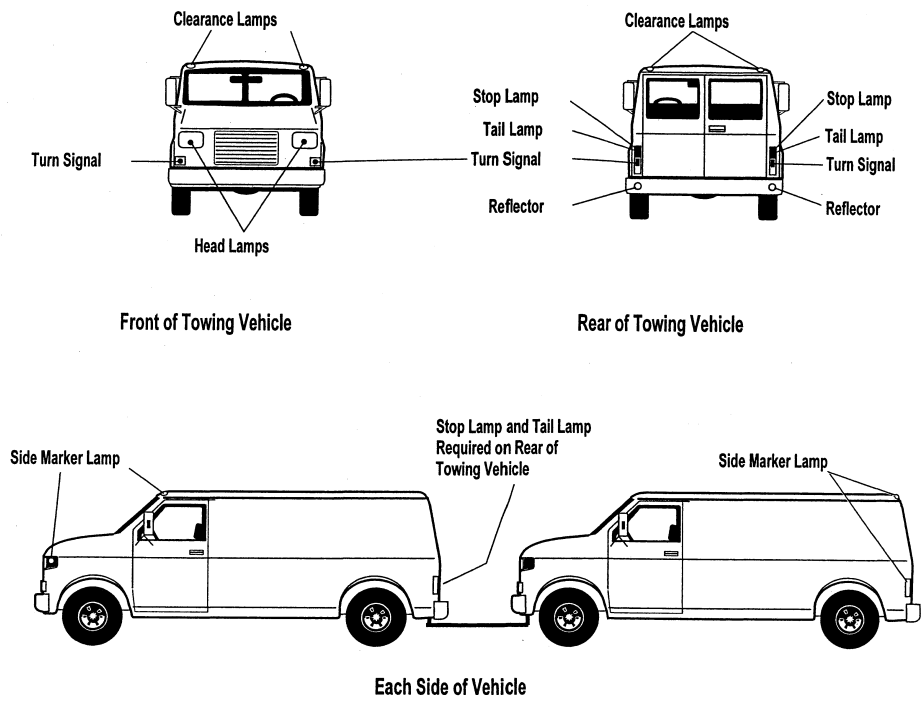

Lamps may be combined as permitted by § 393.22. The color of exterior lighting devices and reflectors shall conform to requirements of § 393.11

(49 U.S.C. 304, 1655; 49 CFR 1.48(b) and 301.60)

[40 FR 36126, Aug. 19, 1975, as amended at 47 FR 47837, Oct. 28, 1982; 70 FR 48044, Aug. 15, 2005]

§ 393.19 Hazard warning signals.

The hazard warning signal operating unit on each commercial motor vehicle shall operate independently of the ignition or equivalent switch, and when activated, cause all turn signals required by § 393.11 to flash simultaneously.

[70 FR 48046, Aug. 15, 2005]

§ 393.20 [Reserved]

§ 393.22 Combination of lighting devices and reflectors.

(a) *Permitted combinations.* Except as provided in paragraph (b) of this section, two or more lighting devices and reflectors (whether or not required by the rules in this part) may be combined optically if—

(1) Each required lighting device and reflector conforms to the applicable rules in this part; and

(2) Neither the mounting nor the use of a nonrequired lighting device or reflector impairs the effectiveness of a required lighting device or reflector or causes that device or reflector to be inconsistent with the applicable rules in this part.

(b) *Prohibited combinations.* (1) A turn signal lamp must not be combined optically with either a head lamp or other

lighting device or combination of lighting devices that produces a greater intensity of light than the turn signal lamp.

(2) A turn signal lamp must not be combined optically with a stop lamp unless the stop lamp function is always deactivated when the turn signal function is activated.

(3) A clearance lamp must not be combined optically with a tail lamp or identification lamp.

[39 FR 26908, July 24, 1974]

§ 393.23 Power supply for lamps.

All required lamps must be powered by the electrical system of the motor vehicle with the exception of battery powered lamps used on projecting loads.

[70 FR 48046, Aug. 15, 2005]

§ 393.24 Requirements for head lamps, auxiliary driving lamps and front fog lamps.

(a) *Headlamps*. Every bus, truck and truck tractor shall be equipped with headlamps as required by § 393.11(a). The headlamps shall provide an upper and lower beam distribution of light, selectable at the driver's will and be steady-burning. The headlamps shall be marked in accordance with FMVSS No. 108. Auxiliary driving lamps and/or front fog lamps may not be used to satisfy the requirements of this paragraph.

(b) *Auxiliary driving lamps and front fog lamps*. Commercial motor vehicles may be equipped with auxiliary driving lamps and/or front fog lamps for use in conjunction with, but not in lieu of the required headlamps. Auxiliary driving lamps shall meet SAE Standard J581 Auxiliary Upper Beam Lamps, July 2004, and front fog lamps shall meet SAE Standard J583 Front Fog Lamp, August 2004. (See § 393.7 for information on the incorporation by reference and availability of these documents.)

(c) *Mounting*. Headlamps shall be mounted and aimable in accordance with FMVSS No. 108. Auxiliary driving lamps and front fog lamps shall be mounted so that the beams are aimable and the mounting shall prevent the aim of the lighting device from being disturbed while the vehicle is operating on public roads.

(d) *Aiming*. Headlamps, auxiliary driving lamps and front fog lamps shall be aimed to meet the aiming specifications in FMVSS No. 108 (49 CFR 571.108), SAE J581, and SAE J583, respectively.

[70 FR 48046, Aug. 15, 2005]

§ 393.25 Requirements for lamps other than head lamps.

(a) *Mounting*. All lamps shall be securely mounted on a rigid part of the vehicle. Temporary lamps must be securely mounted to the load and are not required to be mounted to a permanent part of the vehicle.

(b) *Visibility*. Each lamp shall be located so that it meets the visibility requirements specified by FMVSS No. 108 in effect at the time of manufacture of the vehicle. Vehicles which were not subject to FMVSS No. 108 at the time of manufacture shall have each lamp located so that it meets the visibility requirements specified in the SAE standards listed in paragraph (c) of this section. If motor vehicle equipment (*e.g.*, mirrors, snow plows, wrecker booms, backhoes, and winches) prevents compliance with this paragraph by any required lamp, an auxiliary lamp or device meeting the requirements of this paragraph shall be provided. This shall not be construed to apply to lamps on one unit which are obscured by another unit of a combination of vehicles.

(c) *Specifications*. All required lamps (except marker lamps on projecting loads, lamps which are temporarily attached to vehicles transported in driveaway-towaway operations, and lamps on converter dollies and pole trailers) on vehicles manufactured on or after December 25, 1968, shall, at a minimum, meet the applicable requirements of FMVSS No. 108 in effect on the date of manufacture of the vehicle. Marker lamps on projecting loads, all lamps which are temporarily attached to vehicles transported in driveaway-towaway operations, and all lamps on converter dollies and pole trailers must meet the following applicable SAE standards: J586—Stop Lamps for Use on Motor Vehicles Less Than 2032 mm in Overall Width, March 2000; J2261 Stop

Lamps and Front- and Rear-Turn Signal Lamps for Use on Motor Vehicles 2032 mm or More in Overall Width, January 2002; J585—Tail Lamps (Rear Position Lamps) for Use on Motor Vehicles Less Than 2032 mm in Overall Width, March 2000; J588—Turn Signal Lamps for Use on Motor Vehicles Less Than 2032 mm in Overall Width, March 2000; J2040—Tail Lamps (Rear Position Lamps) for Use on Vehicles 2032 mm or More in Overall Width, March 2002; J592—Sidemarker Lamps for Use on Road Vehicles Less Than 2032 mm in Overall Width, August 2000. (See § 393.7 for information on the incorporation by reference and availability of these documents.)

(d) (Reserved)

(e) *Lamps to be steady-burning*. All exterior lamps (both required lamps and any additional lamps) shall be steady-burning with the exception of turn signal lamps; hazard warning signal lamps; school bus warning lamps; amber warning lamps or flashing warning lamps on tow trucks and commercial motor vehicles transporting oversized loads; and warning lamps on emergency and service vehicles authorized by State or local authorities. Lamps combined into the same shell or housing with a turn signal are not required to be steady burning while the turn signal is in use. Amber warning lamps must meet SAE J845—Optical Warning Devices for Authorized Emergency, Maintenance and Service Vehicles, May 1997. Amber flashing warning lamps must meet SAE J595—Directional Flashing Optical Warning Devices for Authorized Emergency, Maintenance and Service Vehicles, January 2005. Amber gaseous discharge warning lamps must meet SAE J1318 Gaseous Discharge Warning Lamp for Authorized Emergency, Maintenance, and Service Vehicles, May 1998. (See § 393.7(b) for information on the incorporation by reference and availability of these documents.)

(f) *Stop lamp operation*. The stop lamps on each vehicle shall be activated upon application of the service brakes. The stop lamps are not required to be activated when the emergency feature of the trailer brakes is used or when the stop lamp is optically combined with the turn signal and the turn signal is in use.

[70 FR 48047, Aug. 15, 2005]

§ 393.26 Requirements for reflectors.

(a) *Mounting*. Reflex reflectors shall be mounted at the locations required by § 393.11. In the case of motor vehicles so constructed that requirement for a 381 mm (15-inch) minimum height above the road surface is not practical, the reflectors shall be mounted as close as practicable to the required mounting height range. All permanent reflex reflectors shall be securely mounted on a rigid part of the vehicle. Temporary reflectors on projecting loads must be securely mounted to the load and are not required to be permanently mounted to a part of the vehicle. Temporary reflex reflectors on vehicles transported in driveaway-towaway operations must be firmly attached.

(b) *Specifications*. All required reflex reflectors (except reflex reflectors on projecting loads, vehicles transported in a driveaway-towaway operation, converter dollies and pole trailers) on vehicles manufactured on or after December 25, 1968, shall meet the applicable requirements of FMVSS No. 108 in effect on the date of manufacture of the vehicle. Reflex reflectors on projecting loads, vehicles transported in a driveaway-towaway operation, and all reflex reflectors on converter dollies and pole trailers must conform to SAE J594—Reflex Reflectors, December 2003.

(c) *Substitute material for side reflex reflectors*. Reflective material conforming to ASTM D 4956–04, Standard Specification for Retroreflective Sheeting for Traffic Control, may be used in lieu of reflex reflectors if the material as used on the vehicle, meets the performance standards in either Table I of SAE J594 or Table IA of SAE J594—Reflex Reflectors, December 2003. (See § 393.7(b) for information on the incorporation by reference and availability of these documents.)

(d) *Use of additional retroreflective surfaces*. Additional retroreflective surfaces may be used in conjunction with, but not in lieu of the reflex reflectors required in subpart B of part 393, and the substitute material for side reflex reflectors allowed by paragraph (c) of this section, provided:

(1) Designs do not resemble traffic control signs, lights, or devices, except that straight edge striping resembling a barricade pattern may be used.

(2) Designs do not tend to distort the length and/or width of the motor vehicle.

(3) Such surfaces shall be at least 3 inches from any required lamp or reflector unless of the same color as such lamp or reflector.

(4) No red color shall be used on the front of any motor vehicle, except for display of markings or placards required by § 177.823 of this title.

(5) Retroreflective license plates required by State or local authorities may be used.

[33 FR 19735, Dec. 25, 1968, as amended at 35 FR 3167, Feb. 19, 1970; 53 FR 49397, Dec. 7, 1988; 70 FR 48047, Aug. 15, 2005]

§ 393.27 [Reserved]

§ 393.28 Wiring systems.

Electrical wiring shall be installed and maintained to conform to SAE J1292—Automobile, Truck, Truck-Tractor, Trailer, and Motor Coach Wiring, October 1981, except the jumper cable plug and receptacle need not conform to SAE J560. The reference to SAE J1292 shall not be construed to require circuit protection on trailers. (See § 393.7(b) for information on the incorporation by reference and availability of this document.)

[70 FR 48047, Aug. 15, 2005]

§ 393.29 [Reserved]

§ 393.30 Battery installation.

Every storage battery on every vehicle, unless located in the engine compartment, shall be covered by a fixed part of the motor vehicle or protected by a removable cover or enclosure. Removable covers or enclosures shall be substantial and shall be securely latched or fastened. The storage battery compartment and adjacent metal parts which might corrode by reason of battery leakage shall be painted or coated with an acid-resisting paint or coating and shall have openings to provide ample battery ventilation and drainage. Wherever the cable to the starting motor passes through a metal compartment, the cable shall be protected against grounding by an acid and waterproof insulating bushing. Wherever a battery and a fuel tank are both placed under the driver's seat, they shall be partitioned from each other, and each compartment shall be provided with an independent cover, ventilation, and drainage.

§ 393.31—393.33 [Reserved]

Subpart C—Brakes

§ 393.40 Required brake systems.

(a) Each commercial motor vehicle must have brakes adequate to stop and hold the vehicle or combination of motor vehicles. Each commercial motor vehicle must meet the applicable service, parking, and emergency brake system requirements provided in this section.

(b) Service brakes. (1) *Hydraulic brake systems.* Motor vehicles equipped with hydraulic brake systems and manufactured on or after September 2, 1983, must, at a minimum, have a service brake system that meets the requirements of FMVSS No. 105 in effect on the date of manufacture. Motor vehicles which were not subject to FMVSS No. 105 on the date of manufacture must have a service brake system that meets the applicable requirements of §§ 393.42, 393.48, 393.49, 393.51, and 393.52 of this subpart.

(2) *Air brake systems.* Buses, trucks and truck-tractors equipped with air brake systems and manufactured on or after March 1, 1975, and trailers manufactured on or after January 1, 1975, must, at a minimum, have a service brake system that meets the requirements of FMVSS No. 121 in effect on the date of manufacture. Motor vehicles which were not subject to FMVSS No. 121 on the date of manufacture must have a service brake system that meets the applicable requirements of §§ 393.42, 393.48, 393.49, 393.51, and 393.52 of this subpart.

(3) *Vacuum brake systems.* Motor vehicles equipped with vacuum brake systems must have a service brake system that meets the applicable requirements of §§ 393.42, 393.48, 393.49, 393.51, and 393.52 of this subpart.

(4) *Electric brake systems.* Motor vehicles equipped with electric brake systems must have a service brake system that meets the applicable requirements of §§ 393.42, 393.48, 393.49 and 393.52 of this subpart.

(c) *Parking brakes.* Each commercial motor vehicle must be equipped with a parking brake system that meets the applicable requirements of § 393.41.

(d) Emergency brakes—partial failure of service brakes.

(1) *Hydraulic brake systems.* Motor vehicles manufactured on or after September 2, 1983, and equipped with a split service brake system must, at a minimum, meet the partial failure requirements of FMVSS No. 105 in effect on the date of manufacture.

(2) *Air brake systems.* Buses, trucks and truck tractors manufactured on or after March 1, 1975, and trailers manufactured on or after January 1, 1975, must be equipped with an emergency brake system which, at a minumum, meets the requirements of FMVSS No. 121 in effect on the date of manufacture.

(3) *Vehicles not subject to FMVSS Nos. 105 and 121 on the date of manufacture.* Buses, trucks and truck tractors not subject to FMVSS Nos. 105 or 121 on the date of manufacture must meet the requirements of § 393.40(e). Trailers not subject to FMVSS No. 121 at the time of manufacture must meet the requirements of § 393.43.

(e) Emergency brakes, vehicles manufactured on or after July 1, 1973. (1) A bus, truck, truck tractor, or a combination of motor vehicles manufactured on or after July 1, 1973, and not covered under paragraphs (d)(1) or (d)(2) of this section, must have an emergency brake system which consists of emergency features of the service brake system or an emergency system separate from the service brake system. The emergency brake system must meet the applicable requirements of §§ 393.43 and 393.52.

(2) A control by which the driver applies the emergency brake system must be located so that the driver can operate it from the normal seating position while restrained by any seat belts with which the vehicle is equipped. The emergency brake control may be combined with either the service brake control or the parking brake control. However, all three controls may not be combined.

(f) *Interconnected systems.* (1) If the brake systems required by § 393.40(a) are interconnected in any way, they must be designed, constructed, and maintained so that in the event of a failure of any part of the operating mechanism of one or more of the systems (except the service brake actuation pedal or valve), the motor vehicle will have operative brakes and, for vehicles manufactured on or after July 1, 1973, be capable of meeting the requirements of § 393.52(b).

(2) A motor vehicle to which the requirements of FMVSS No. 105 (S5.1.2), dealing with partial failure of the service brake, applied at the time of manufacture meets the requirements of § 393.40(f)(1) if the motor vehicle is maintained in conformity with FMVSS No. 105 and the motor vehicle is capable of meeting the requirements of § 393.52(b), except in the case of a structural failure of the brake master cylinder body.

(3) A bus is considered to meet the requirements of § 393.40(f)(1) if it meets the requirements of § 393.44 and § 393.52(b).

[70 FR 48048, Aug. 15, 2005]

§ 393.41 Parking brake system.

(a) *Hydraulic-braked vehicles manufactured on or after September 2, 1983.* Each truck and bus (other than a school bus) with a GVWR of 4,536 kg (10,000 pounds) or less which is subject to this part and school buses with a GVWR greater than 4,536 kg (10,000 pounds) shall be equipped with a parking brake system as required by FMVSS No. 571.105 (S5.2) in effect at the time of manufacture. The parking brake shall be capable of holding the vehicle or combination of vehicles stationary under any condition of loading in which it is found on a public road (free of ice and snow). Hydraulic-braked vehicles which were not subject to the parking brake requirements of FMVSS No. 571.105 (S5.2) must be equipped with a parking brake system that meets the requirements of paragraph (c) of this section.

(b) *Air-braked power units manufactured on or after March 1, 1975, and air-*

braked trailers manufactured on or after January 1, 1975.

Each air-braked bus, truck and truck tractor manufactured on and after March 1, 1975, and each air-braked trailer except an agricultural commodity trailer, converter dolly, heavy hauler trailer or pulpwood trailer, shall be equipped with a parking brake system as required by FMVSS No. 121 (S5.6) in effect at the time of manufacture. The parking brake shall be capable of holding the vehicle or combination of vehicles stationary under any condition of loading in which it is found on a public road (free of ice and snow). An agricultural commodity trailer, heavy hauler or pulpwood trailer shall carry sufficient chocking blocks to prevent movement when parked.

(c) Vehicles not subject to FMVSS Nos. 105 and 121 on the date of manufacture. (1) Each singly driven motor vehicle not subject to parking brake requirements of FMVSS Nos. 105 or 121 at the time of manufacturer, and every combination of motor vehicles must be equipped with a parking brake system adequate to hold the vehicle or combination on any grade on which it is operated, under any condition of loading in which it is found on a public road (free of ice and snow).

(2) The parking brake system shall, at all times, be capable of being applied by either the driver's muscular effort or by spring action. If other energy is used to apply the parking brake, there must be an accumulation of that energy isolated from any common source and used exclusively for the operation of the parking brake.

Exception: This paragraph shall not be applicable to air-applied, mechanically-held parking brake systems which meet the parking brake requirements of FMVSS No. 121 (S5.6).

(3) The parking brake system shall be held in the applied position by energy other than fluid pressure, air pressure, or electric energy. The parking brake system shall not be capable of being released unless adequate energy is available to immediately reapply the parking brake with the required effectiveness.

[70 FR 48048, Aug. 15, 2005]

§ 393.42 Brakes required on all wheels.

(a) Every commercial motor vehicle shall be equipped with brakes acting on all wheels.

(b) *Exception.* (1) Trucks or truck tractors having three or more axles and manufactured before July 25, 1980, are not required to have brakes on the front wheels. However, these vehicles must meet the requirements of § 393.52.

(2) Motor vehicles being towed in a driveaway-towaway operation are not required to have operative brakes provided the combination of vehicles meets the requirements of § 393.52. This exception is not applicable to:

(i) Any motor vehicle towed by means of a tow-bar when another motor vehicle is full-mounted on the towed vehicle; and

(ii) Any combination of motor vehicles utilizing three or more saddlemounts.

(3) Any semitrailer or pole trailer (laden or unladen) with a gross weight of 1,361 kg (3,000 pounds) or less which is subject to this part is not required to be equipped with brakes if the axle weight of the towed vehicle does not exceed 40 percent of the sum of the axle weights of the towing vehicle.

(4) Any full trailer or four-wheel pole trailer (laden or unladen) with a gross weight of 1,361 kg (3,000 pounds) or less which is subject to this part is not required to be equipped with brakes if the sum of the axle weights of the towed vehicle does not exceed 40 percent of the sum of the axle weights of the towing vehicle.

(5) Brakes are not required on the steering axle of a three-axle dolly which is steered by a co-driver.

(6) Loaded housemoving dollies, specialized trailers and dollies used to transport industrial furnaces, reactors, and similar motor vehicles are not required to be equipped with brakes, provided the speed at which the combination of vehicles will be operated does not exceed 32 km/hour (20 mph) and brakes on the combination of vehicles are capable of stopping the combination within 12.2 meters (40 feet) from the speed at which the vehicle is being operated or 32 km/hour (20 mph), whichever is less.

Figure 22 - Illustrations of Brake Requirements for Light-Duty Trailers in § 393.42

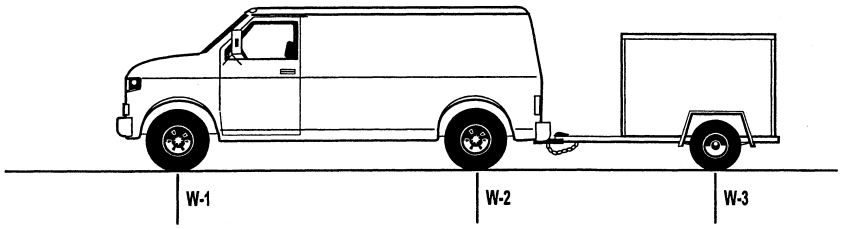

(Semitrailer or 2-wheel pole trailer of 1,360 kilograms (3,000 pounds) gross weight or less must be equipped with brakes if W-3 is greater than 40 percent of the sum of W-1 and W-2.)

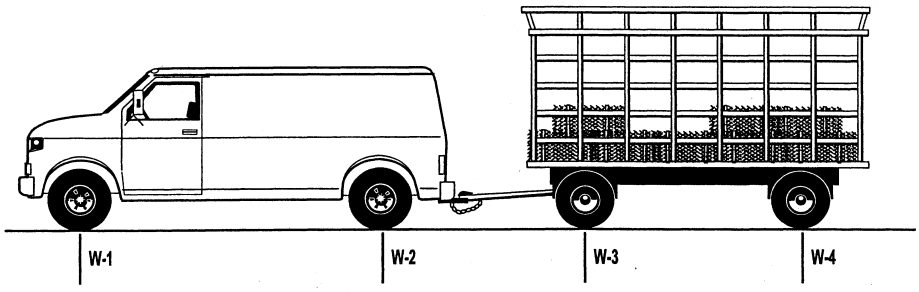

(Full trailer or 4-wheel pole trailer of 1,360 kilograms (3,000 pounds) gross weight or less must be equipped with brakes if the sum of W-3 and W-4 is greater than 40 percent of the sum of W-1 and W-2.)

[52 FR 2803, Jan. 27, 1987, as amended at 53 FR 49398, Dec. 7, 1988; 54 FR 48617, Nov. 24, 1989; 59 FR 25574, May 17, 1994; 61 FR 1843, Jan. 24, 1996; 70 FR 48049, Aug. 15, 2005]

§ 393.43 Breakaway and emergency braking.

(a) *Towing vehicle protection system.* Every motor vehicle, if used to tow a trailer equipped with brakes, shall be equipped with a means for providing that in the case of a breakaway of the trailer, the service brakes on the towing vehicle will be capable of stopping the towing vehicle. For air braked towing units, the tractor protection valve or similar device shall operate automatically when the air pressure on the towing vehicle is between 138 kPa and 310 kPa (20 psi and 45 psi).

(b) *Emergency brake requirements, air brakes.* Every truck or truck tractor equipped with air brakes, when used for towing other vehicles equipped with air brakes, shall be equipped with two means of activating the emergency features of the trailer brakes. One of these means shall operate automatically in the event of reduction of the towing vehicle air supply to a fixed pressure which shall not be lower than 20 pounds per square inch nor higher than 45 pounds per square inch. The other means shall be a manually controlled device readily operable by a person

seated in the driving seat. Its emergency position or method of operation shall be clearly indicated. In no instance may the manual means be so arranged as to permit its use to prevent operation of the automatic means. The automatic and manual means required by this section may be, but are not required to be, separate.

(c) *Emergency brake requirements, vacuum brakes.* Every truck tractor and truck when used for towing other vehicles equipped with vacuum brakes, shall have, in addition to the single control required by § 393.49 to operate all brakes of the combination, a second manual control device which can be used to operate the brakes on the towed vehicles in emergencies. Such second control shall be independent of brake air, hydraulic, and other pressure, and independent of other controls, unless the braking system be so arranged that failure of the pressure on which the second control depends will cause the towed vehicle brakes to be applied automatically. The second control is not required by this rule to provide modulated or graduated braking.

(d) *Breakaway braking requirements for trailers.* Every trailer required to be equipped with brakes shall have brakes which apply automatically and immediately upon breakaway from the towing vehicle. With the exception of trailers having three or more axles, all brakes with which the trailer is required to be equipped must be applied upon breakaway from the towing vehicle. The brakes must remain in the applied position for at least 15 minutes.

(e) *Emergency valves.* Air brake systems installed on towed vehicles shall be so designed, by the use of ''no-bleed-back'' relay emergency valves or equivalent devices, that the supply reservoir used to provide air for brakes shall be safeguarded against backflow of air to the towing vehicle upon reduction of the towing vehicle air pressure.

(f) *Exception.* The requirements of paragraphs (b), (c) and (d) of this section shall not be applicable to commercial motor vehicles being transported in driveaway-towaway operations.

[53 FR 49384, Dec. 7, 1988, as amended at 70 FR 48050, Aug. 15, 2005]

§ 393.44 Front brake lines, protection.

On every bus, if equipped with air brakes, the braking system shall be so constructed that in the event any brake line to any of the front wheels is broken, the driver can apply the brakes on the rear wheels despite such breakage. The means used to apply the brakes may be located forward of the driver's seat as long as it can be operated manually by the driver when the driver is properly restrained by any seat belt assembly provided for use. Every bus shall meet this requirement or comply with the regulations in effect at the time of its manufacture.

[53 FR 49400, Dec. 7, 1988]

§ 393.45 Brake tubing and hoses; hose assemblies and end fittings.

(a) *General construction requirements for tubing and hoses, assemblies, and end fittings.* All brake tubing and hoses, brake hose assemblies, and brake hose end fittings must meet the applicable requirements of FMVSS No. 106 (49 CFR 571.106).

(b) *Brake tubing and hose installation.* Brake tubing and hose must—

(1) Be long and flexible enough to accommodate without damage all normal motions of the parts to which it is attached;

(2) Be secured against chaffing, kinking, or other mechanical damage; and

(3) Be installed in a manner that prevents it from contacting the vehicle's exhaust system or any other source of high temperatures.

(c) *Nonmetallic brake tubing.* Coiled nonmetallic brake tubing may be used for connections between towed and towing motor vehicles or between the frame of a towed vehicle and the unsprung subframe of an adjustable axle of the motor vehicle if—

(1) The coiled tubing has a straight segment (pigtail) at each end that is at least 51 mm (2 inches) in length and is encased in a spring guard or similar device which prevents the tubing from kinking at the fitting at which it is attached to the vehicle; and

(2) The spring guard or similar device has at least 51 mm (2 inches) of closed coils or similar surface at its interface with the fitting and extends at least 38

mm (1½ inches) into the coiled segment of the tubing from its straight segment.

(d) *Brake tubing and hose connections.* All connections for air, vacuum, or hydraulic braking systems shall be installed so as to ensure an attachment free of leaks, constrictions or other conditions which would adversely affect the performance of the brake system.

[70 FR 48050, Aug. 15, 2005]

§ 393.46 [Reserved]

§ 393.47 Brake actuators, slack adjusters, linings/pads and drums/rotors.

(a) *General requirements.* Brake components must be constructed, installed and maintained to prevent excessive fading and grabbing. The means of attachment and physical characteristics must provide for safe and reliable stopping of the commercial motor vehicle.

(b) *Brake chambers.* The service brake chambers and spring brake chambers on each end of an axle must be the same size.

(c) *Slack adjusters.* The effective length of the slack adjuster on each end of an axle must be the same.

(d) *Linings and pads.* The thickness of the brake linings or pads shall meet the applicable requirements of this paragraph—

(1) *Steering axle brakes.* The brake lining/pad thickness on the steering axle of a truck, truck-tractor or bus shall not be less than 4.8 mm (3/16 inch) at the shoe center for a shoe with a continuous strip of lining; less than 6.4 mm (¼ inch) at the shoe center for a shoe with two pads; or worn to the wear indicator if the lining is so marked, for air drum brakes. The steering axle brake lining/pad thickness shall not be less than 3.2 mm (⅛ inch) for air disc brakes, or 1.6 mm (1/16 inch) or less for hydraulic disc, drum and electric brakes.

(2) *Non-steering axle brakes.* An air braked commercial motor vehicle shall not be operated with brake lining/pad thickness less than 6.4 mm (¼ inch) or to the wear indicator if the lining is so marked (measured at the shoe center for drum brakes); or less than 3.2 mm (⅛ inch) for disc brakes. Hydraulic or electric braked commercial motor vehicles shall not be operated with a lining/pad thickness less than 1.6 mm (1/16 inch) (measured at the shoe center) for disc or drum brakes.

(e) *Clamp and Roto-Chamber Brake Actuator Readjustment limits.* The pushrod travel for clamp and roto-chamber type actuators must be less than 80 percent of the rated strokes listed in SAE J1817—Long Stroke Air Brake Actuator Marking, July 2001 (See § 393.7 (b) for information on incorporation by reference and availability of this document), or 80 percent of the rated stroke marked on the brake chamber by the chamber manufacturer, or the readjustment limit marked on the brake chamber by the chamber manufacturer. The pushrod travel for Type 16 and 20 long stroke clamp type brake actuators must be less than 51 mm (2 inches) or 80 percent of the rated stroke marked on the brake chamber by the chamber manufacturer, or the readjustment limit marked on the brake chamber by the chamber manufacturer.

(f) *Wedge Brake Adjustment.* The movement of the scribe mark on the lining shall not exceed 1.6 mm (1/16 inch).

(g) *Drums and rotors.* The thickness of the drums or rotors shall not be less than the limits established by the brake drum or rotor manufacturer.

[70 FR 48051, Aug. 15, 2005]

§ 393.48 Brakes to be operative.

(a) *General rule.* Except as provided in paragraphs (b) and (c) of this section, all brakes with which a commercial motor vehicle is equipped must be operable at all times.

(b) *Devices to reduce or remove front-wheel braking effort.* A commercial motor vehicle may be equipped with a device to reduce the front wheel braking effort (or in the case of a three-axle truck or truck tractor manufactured before March 1, 1975, a device to remove the front-wheel braking effort) if that device meets the applicable requirements of paragraphs (b)(1) and (2) of this section.

(1) *Manually operated devices.* Manually operated devices to reduce or remove front-wheel braking effort may only be used on buses, trucks, and truck tractors manufactured before March 1, 1975. Such devices must not be

used unless the vehicle is being operated under adverse conditions such as wet, snowy, or icy roads.

(2) *Automatic devices.* Automatic devices must not reduce the front-wheel braking force by more than 50 percent of the braking force available when the automatic device is disconnected (regardless of whether or not an antilock system failure has occurred on any axle). The device must not be operable by the driver except upon application of the control that activates the braking system. The device must not be operable when the brake control application pressure exceeds 85 psig (for vehicles equipped with air brakes) or 85 percent of the maximum system pressure (for vehicles which are not equipped with air brakes).

(c) *Exception.* Paragraph (a) of this section does not apply to—

(1) A towed vehicle with disabling damage as defined in § 390.5;

(2) A vehicle which is towed in a driveaway-towaway operation and is included in the exemption to the requirement for brakes on all wheels, § 393.42(b);

(3) Unladen converter dollies with a gross weight of 1,361 kg (3,000 lbs) or less, and manufactured prior to March 1, 1998;

(4) The steering axle of a three-axle dolly which is steered by a co-driver;

(5) Loaded house moving dollies, specialized trailers and dollies used to transport industrial furnaces, reactors, and similar motor vehicles provided the speed at which the combination of vehicles will be operated does not exceed 32 km/hour (20 mph) and brakes on the combination of vehicles are capable of stopping the combination within 12.2 meters (40 feet) from the speed at which the vehicle is being operated or 32 km/hour (20 mph), whichever is less.

(6) Raised lift axles. Brakes on lift axles need not be capable of being operated while the lift axle is raised. However, brakes on lift axles must be capable of being applied whenever the lift axle is lowered and the tires contact the roadway.

[70 FR 48051, Aug. 15, 2005]

§ 393.49 Single valve to operate all brakes.

Every motor vehicle, the date of manufacture of which is subsequent to June 30, 1953, which is equipped with power brakes, shall have the braking system so arranged that one application valve shall when applied operate all the service brakes on the motor vehicle or combination of motor vehicles. This requirement shall not be construed to prohibit motor vehicles from being equipped with an additional valve to be used to operate the brakes on a trailer or trailers or as provided in § 393.44. This section shall not be applicable to driveaway-towaway operations unless the brakes on such operations are designed to be operated by a single valve.

§ 393.50 Reservoirs required.

(a) *Reservoir capacity for air-braked power units manufactured on or after March 1, 1975, and air-braked trailers manufactured on or after January 1, 1975.* Buses, trucks, and truck-tractors manufactured on or after March 1, 1975, and air-braked trailers manufactured on or after January 1, 1975, must meet the reservoir requirements of FMVSS No. 121, S5.1.2, in effect on the date of manufacture.

(b) *Reservoir capacity for air-braked vehicles not subject to FMVSS No. 121 on the date of manufacture and all vacuum braked vehicles.* Each motor vehicle using air or vacuum braking must have either reserve capacity, or a reservoir, that would enable the driver to make a full service brake application with the engine stopped without depleting the air pressure or vacuum below 70 percent of that indicated by the air or vacuum gauge immediately before the brake application is made. For the purposes of this paragraph, a full service brake application means depressing the brake pedal or treadle valve to the limit of its travel.

(c) *Safeguarding of air and vacuum.* Each service reservoir system on a motor vehicle shall be protected against a loss of air pressure or vacuum due to a failure or leakage in the system between the service reservoir and the source of air pressure or vacuum, by check valves or equivalent devices whose proper functioning can be

checked without disconnecting any air or vacuum line, or fitting.

(d) *Drain valves for air braked vehicles.* Each reservoir must have a condensate drain valve that can be manually operated. Automatic condensate drain valves may be used provided (1) they may be operated manually, or (2) a manual means of draining the reservoirs is retained.

[70 FR 48052, Aug. 15, 2005]

§ 393.51 Warning signals, air pressure and vacuum gauges.

(a) *General Rule.* Every bus, truck and truck tractor, except as provided in paragraph (f), must be equipped with a signal that provides a warning to the driver when a failure occurs in the vehicle's service brake system. The warning signal must meet the applicable requirements of paragraphs (b), (c), (d) or (e) of this section.

(b) *Hydraulic brakes.* Vehicles manufactured on or after September 1, 1975, must meet the brake system indicator lamp requirements of FMVSS No. 571.105 (S5.3) applicable to the vehicle on the date of manufacture. Vehicles manufactured on or after July 1, 1973 but before September 1, 1975, or to which FMVSS No. 571.105 was not applicable on the date of manufacture, must have a warning signal which operates before or upon application of the brakes in the event of a hydraulic-type complete failure of a partial system. The signal must be either visible within the driver's forward field of view or audible. The signal must be continuous. (NOTE: FMVSS No. 105 was applicable to trucks and buses from September 1, 1975 to October 12, 1976, and from September 1, 1983, to the present. FMVSS No. 105 was not applicable to trucks and buses manufactured between October 12, 1976, and September 1, 1983. Motor carriers have the option of equipping those vehicles to meet either the indicator lamp requirements of FMVSS No. 105, or the indicator lamp requirements specified in this paragraph for vehicles which were not subject to FMVSS No. 105 on the date of manufacture.)

(c) *Air brakes.* A commercial motor vehicle (regardless of the date of manufacture) equipped with service brakes activated by compressed air (air brakes) or a commercial motor vehicle towing a vehicle with service brakes activated by compressed air (air brakes) must be equipped with a pressure gauge and a warning signal. Trucks, truck tractors, and buses manufactured on or after March 1, 1975, must, at a minimum, have a pressure gauge and a warning signal which meets the requirements of FMVSS No. 121 (S5.1.4 for the pressure gauge and S5.1.5 for the warning signal) applicable to the vehicle on the date of manufacture of the vehicle. Power units to which FMVSS No. 571.121 was not applicable on the date of manufacture of the vehicle must be equipped with—

(1) A pressure gauge, visible to a person seated in the normal driving position, which indicates the air pressure (in kilopascals (kPa) or pounds per square inch (psi)) available for braking; and

(2) A warning signal that is audible or visible to a person in the normal driving position and provides a continuous warning to the driver whenever the air pressure in the service reservoir system is at 379 kPa (55 psi) and below, or one-half of the compressor governor cutout pressure, whichever is less.

(d) *Vacuum brakes.* A commercial motor vehicle (regardless of the date it was manufactured) having service brakes activated by vacuum or a vehicle towing a vehicle having service brakes activated by vacuum must be equipped with—

(1) A vacuum gauge, visible to a person seated in the normal driving position, which indicates the vacuum (in millimeters or inches of mercury) available for braking; and

(2) A warning signal that is audible or visible to a person in the normal driving position and provides a continuous warning to the driver whenever the vacuum in the vehicle's supply reservoir is less than 203 mm (8 inches) of mercury.

(e) *Hydraulic brakes applied or assisted by air or vacuum.* Each vehicle equipped with hydraulically activated service brakes which are applied or assisted by compressed air or vacuum, and to which FMVSS No. 105 was not applicable on the date of manufacture, must be equipped with a warning signal that

conforms to paragraph (b) of this section for the hydraulic portion of the system; paragraph (c) of this section for the air assist/air applied portion; or paragraph (d) of this section for the vacuum assist/vacuum applied portion. This paragraph shall not be construed as requiring air pressure gauges or vacuum gauges, only warning signals.

(f) *Exceptions*. The rules in paragraphs (c), (d) and (e) of this section do not apply to property carrying commercial motor vehicles which have less than three axles and (1) were manufactured before July 1, 1973, and (2) have a manufacturer's gross vehicle weight rating less than 4,536 kg (10,001 pounds).

[70 FR 48052, Aug. 15, 2005]

§ 393.52 Brake performance.

(a) Upon application of its service brakes, a motor vehicle or combination of motor vehicles must under any condition of loading in which it is found on a public highway, be capable of—

(1) Developing a braking force at least equal to the percentage of its gross weight specified in the table in paragraph (d) of this section;

(2) Decelerating to a stop from 20 miles per hour at not less than the rate specified in the table in paragraph (d) of this section; and

(3) Stopping from 20 miles per hour in a distance, measured from the point at which movement of the service brake pedal or control begins, that is not greater than the distance specified in the table in paragraph (d) of this section; or, for motor vehicles or motor vehicle combinations that have a GVWR or GVW greater than 4,536 kg (10,000 pounds),

(4) Developing only the braking force specified in paragraph (a)(1) of this section and the stopping distance specified in paragraph (a)(3) of this section, if braking force is measured by a performance-based brake tester which meets the requirements of functional specifications for performance-based brake testers for commercial motor vehicles, where braking force is the sum of the braking force at each wheel of the vehicle or vehicle combination as a percentage of gross vehicle or combination weight.

(b) Upon application of its emergency brake system and with no other brake system applied, a motor vehicle or combination of motor vehicles must, under any condition of loading in which it is found on a public highway, be capable of stopping from 20 miles per hour in a distance, measured from the point at which movement of the emergency brake control begins, that is not greater than the distance specified in the table in paragraph (d) of this section.

(c) Conformity to the stopping-distance requirements of paragraphs (a) and (b) of this section shall be determined under the following conditions:

(1) Any test must be made with the vehicle on a hard surface that is substantially level, dry, smooth, and free of loose material.

(2) The vehicle must be in the center of a 12-foot-wide lane when the test begins and must not deviate from that lane during the test.

(d) Vehicle brake performance table:

Type of motor vehicle	Service brake systems			Emergency brake systems
	Braking force as a percentage of gross vehicle or combination weight	Deceleration in feet per second per second	Application and braking distance in feet from initial speed at 20 mph	Application and braking distance in feet from initial speed of 20 mph
A. Passenger-carrying vehicles:				
(1) Vehicles with a seating capacity of 10 persons or less, including driver, and built on a passenger car chassis	65.2	21	20	54
(2) Vehicles with a seating capacity of more than 10 persons, including driver, and built on a passenger car chassis; vehicles built on a truck or bus chassis and having a manufacturer's GVWR of 10,000 pounds or less	52.8	17	25	66
(3) All other passenger-carrying vehicles	43.5	14	35	85
B. Property-carrying vehicles:				
(1) Single unit vehicles having a manufacturer's GVWR of 10,000 pounds or less	52.8	17	25	66
(2) Single unit vehicles having a manufacturer's GVWR of more than 10,000 pounds, except truck tractors. Combinations of a 2-axle towing vehicle and trailer having a GVWR of 3,000 pounds or less. All combinations of 2 or less vehicles in drive-away or tow-away operation	43.5	14	35	85
(3) All other property-carrying vehicles and combinations of property-carrying vehicles	43.5	14	40	90

Notes: (a) There is a definite mathematical relationship between the figures in columns 2 and 3. If the decelerations set forth in column 3 are divided by 32.2 feet per-second per-second, the figures in column 2 will be obtained. (For example, 21 divided by 32.2 equals 65.2 percent.) Column 2 is included in the tabulation because certain brake testing devices utilize this factor.

(b) The decelerations specified in column 3 are an indication of the effectiveness of the basic brakes, and as measured in practical brake testing are the maximum decelerations attained at some time during the stop. These decelerations as measured in brake tests cannot be used to compute the values in column 4 because the deceleration is not sustained at the same rate over the entire period of the stop. The deceleration increases from zero to a maximum during a period of brake system application and brake-force buildup. Also, other factors may cause the deceleration to decrease after reaching a maximum. The added distance that results because maximum deceleration is not sustained is included in the figures in column 4 but is not indicated by the usual brake-testing devices for checking deceleration.

(c) The distances in column 4 and the decelerations in column 3 are not directly related. "Brake-system application and braking distance in feet" (column 4) is a definite measure of the overall effectiveness of the braking system, being the distance traveled between the point at which the driver starts to move the braking controls and the point at which the vehicle comes to rest. It includes distance traveled while the brakes are being applied and distance traveled while the brakes are retarding the vehicle.

(d) The distance traveled during the period of brake-system application and brake-force buildup varies with vehicle type, being negligible for many passenger cars and greatest for combinations of commercial vehicles. This fact accounts for the variation from 20 to 40 feet in the values in column 4 for the various classes of vehicles.

(e) The terms "GVWR" and "GVW" refer to the manufacturer's gross vehicle weight rating and the actual gross vehicle weight, respectively.

[36 FR 20298, Oct. 20, 1971, as amended at 37 FR 5251, Mar. 11, 1972; 37 FR 11336, June 7, 1972; 68 FR 51777, Aug. 9, 2002]

§ 393.53 Automatic brake adjusters and brake adjustment indicators.

(a) *Automatic brake adjusters (hydraulic brake systems).* Each commercial motor vehicle manufactured on or after October 20, 1993, and equipped with a hydraulic brake system, shall meet the automatic brake adjustment system requirements of Federal Motor Vehicle Safety Standard No. 105 (49 CFR 571.105, S5.1) applicable to the vehicle at the time it was manufactured.

(b) *Automatic brake adjusters (air brake systems).* Each commercial motor vehicle manufactured on or after October 20, 1994, and equipped with an air brake system shall meet the automatic brake adjustment system requirements of Federal Motor Vehicle Safety Standard No. 121 (49 CFR 571.121, S5.1.8) applicable to the vehicle at the time it was manufactured.

(c) *Brake adjustment indicator (air brake systems).* On each commercial motor vehicle manufactured on or after October 20, 1994, and equipped with an air brake system which contains an external automatic adjustment mechanism and an exposed pushrod, the condition of service brake under-adjustment shall be displayed by a brake adjustment indicator conforming to the requirements of Federal Motor Vehicle Safety Standard No. 121 (49 CFR 571.121, S5.1.8) applicable to the vehicle at the time it was manufactured.

[60 FR 46245, Sept. 6, 1995]

§ 393.55 Antilock brake systems.

(a) *Hydraulic brake systems.* Each truck and bus manufactured on or after March 1, 1999 (except trucks and buses engaged in driveaway-towaway operations), and equipped with a hydraulic brake system, shall be equipped with an antilock brake system that meets the requirements of Federal Motor Vehicle Safety Standard (FMVSS) No. 105 (49 CFR 571.105, S5.5).

(b) *ABS malfunction indicators for hydraulic braked vehicles.* Each hydraulic braked vehicle subject to the requirements of paragraph (a) of this section shall be equipped with an ABS malfunction indicator system that meets the requirements of FMVSS No. 105 (49 CFR 571.105, S5.3).

(c) *Air brake systems.* (1) Each truck tractor manufactured on or after March 1, 1997 (except truck tractors engaged in driveaway-towaway operations), shall be equipped with an antilock brake system that meets the requirements of FMVSS No. 121 (49 CFR 571.121, S5.1.6.1(b)).

(2) Each air braked commercial motor vehicle other than a truck tractor, manufactured on or after March 1, 1998 (except commercial motor vehicles engaged in driveaway-towaway operations), shall be equipped with an antilock brake system that meets the requirements of FMVSS No. 121 (49 CFR 571.121, S5.1.6.1(a) for trucks and buses, S5.2.3 for semitrailers, converter dollies and full trailers).

(d) *ABS malfunction circuits and signals for air braked vehicles.* (1) Each truck tractor manufactured on or after March 1, 1997, and each single-unit air braked vehicle manufactured on or after March 1, 1998, subject to the requirements of paragraph (c) of this section, shall be equipped with an electrical circuit that is capable of signaling a malfunction that affects the generation or transmission of response or control signals to the vehicle's antilock brake system (49 CFR 571.121, S5.1.6.2(a)).

(2) Each truck tractor manufactured on or after March 1, 2001, and each single-unit vehicle that is equipped to tow another air-braked vehicle, subject to the requirements of paragraph (c) of this section, shall be equipped with an electrical circuit that is capable of transmitting a malfunction signal from the antilock brake system(s) on the towed vehicle(s) to the trailer ABS malfunction lamp in the cab of the towing vehicle, and shall have the means for connection of the electrical circuit to the towed vehicle. The ABS malfunction circuit and signal shall meet the requirements of FMVSS No. 121 (49 CFR 571.121, S5.1.6.2(b)).

(3) Each semitrailer, trailer converter dolly, and full trailer manufactured on or after March 1, 2001, and subject to the requirements of paragraph (c)(2) of this section, shall be equipped with an electrical circuit that is capable of signaling a malfunction in the trailer's antilock brake system,

and shall have the means for connection of this ABS malfunction circuit to the towing vehicle. In addition, each trailer manufactured on or after March 1, 2001, subject to the requirements of paragraph (c)(2) of this section, that is designed to tow another air-brake equipped trailer shall be capable of transmitting a malfunction signal from the antilock brake system(s) of the trailer(s) it tows to the vehicle in front of the trailer. The ABS malfunction circuit and signal shall meet the requirements of FMVSS No. 121 (49 CFR 571.121, S5.2.3.2).

(e) *Exterior ABS malfunction indicator lamps for trailers.* Each trailer (including a trailer converter dolly) manufactured on or after March 1, 1998 and before March 1, 2009, and subject to the requirements of paragraph (c)(2) of this section, shall be equipped with an ABS malfunction indicator lamp which meets the requirements of FMVSS No. 121 (49 CFR 571.121, S5.2.3.3).

[63 FR 24465, May 4, 1998]

Subpart D—Glazing and Window Construction

§ 393.60 Glazing in specified openings.

(a) *Glazing material.* Glazing material used in windshields, windows, and doors on a motor vehicle manufactured on or after December 25, 1968, shall at a minimum meet the requirements of Federal Motor Vehicle Safety Standard (FMVSS) No. 205 in effect on the date of manufacture of the motor vehicle. The glazing material shall be marked in accordance with FMVSS No. 205 (49 CFR 571.205, S6).

(b) *Windshields required.* Each bus, truck and truck-tractor shall be equipped with a windshield. Each windshield or portion of a multi-piece windshield shall be mounted using the full periphery of the glazing material.

(c) *Windshield condition.* With the exception of the conditions listed in paragraphs (c)(1), (c)(2), and (c)(3) of this section, each windshield shall be free of discoloration or damage in the area extending upward from the height of the top of the steering wheel (excluding a 51 mm (2 inch) border at the top of the windshield) and extending from a 25 mm (1 inch) border at each side of the windshield or windshield panel. *Exceptions:*

(1) Coloring or tinting which meets the requirements of paragraph (d) of this section;

(2) Any crack that is not intersected by any other cracks;

(3) Any damaged area which can be covered by a disc 19 mm (¾ inch) in diameter if not closer than 76 mm (3 inches) to any other similarly damaged area.

(d) *Coloring or tinting of windshields and windows.* Coloring or tinting of windshields and the windows to the immediate right and left of the driver is allowed, provided the parallel luminous transmittance through the colored or tinted glazing is not less than 70 percent of the light at normal incidence in those portions of the windshield or windows which are marked as having a parallel luminous transmittance of not less than 70 percent. The transmittance restriction does not apply to other windows on the commercial motor vehicle.

(e) *Prohibition on obstructions to the driver's field of view*—(1) *Devices mounted at the top of the windshield.* Antennas, transponders, and similar devices must not be mounted more than 152 mm (6 inches) below the upper edge of the windshield. These devices must be located outside the area swept by the windshield wipers, and outside the driver's sight lines to the road and highway signs and signals.

(2) *Decals and stickers mounted on the windshield.* Commercial Vehicle Safety Alliance (CVSA) inspection decals, and stickers and/or decals required under Federal or State laws may be placed at the bottom or sides of the windshield provided such decals or stickers do not extend more than 115 mm (4½ inches) from the bottom of the windshield and are located outside the area swept by the windshield wipers, and outside the driver's sight lines to the road and highway signs or signals.

[63 FR 1387, Jan. 9, 1998]

§ 393.61 Truck and truck tractor window construction.

Each truck and truck tractor (except trucks engaged in armored car service) shall have at least one window on each side of the driver's compartment. Each window must have a minimum area of

1,290 cm^2 (200 in^2) formed by a rectangle 33 cm by 45 cm (13 inches by 17¾ inches). The maximum radius of the corner arcs shall not exceed 152 mm (6 inches). The long axis of the rectangle shall not make an angle of more than 45 degrees with the surface on which the unladen vehicle stands. If the cab is designed with a folding door or doors or with clear openings where doors or windows are customarily located, no windows shall be required in those locations.

[70 FR 48052, Aug. 15, 2005]

§ 393.62 Emergency exits for buses.

(a) *Buses manufactured on or after September 1, 1994.* Each bus with a GVWR of 4,536 kg (10,000 pounds) or less must meet the emergency exit requirements of FMVSS No. 217 (S5.2.2.3) in effect on the date of manufacture. Each bus with a GVWR of more than 4,536 kg (10,000 pounds) must have emergency exits which meet the applicable emergency exit requirements of FMVSS No. 217 (S5.2.2 or S5.2.3) in effect on the date of manufacture.

(b) Buses manufactured on or after September 1, 1973, but before September 1, 1994. (1) Each bus (including a school bus used in interstate commerce for non-school bus operations) with a GVWR of more than 4,536 kg (10,000 lbs) must meet the requirements of FMVSS No. 217, S5.2.2 in effect on the date of manufacture.

(2) Each bus (including a school bus used in interstate commerce for non-school bus operations) with a GVWR of 4,536 kg (10,000 lbs) or less must meet the requirements of FMVSS No. 217, S5.2.2.3 in effect on the date of manufacture.

(c) *Buses manufactured before September 1, 1973.* For each seated passenger space provided, inclusive of the driver there shall be at least 432 cm^2 (67 square inches) of glazing if such glazing is not contained in a push-out window; or, at least 432 cm^2 (67 square inches) of free opening resulting from opening of a push-out type window. No area shall be included in this minimum prescribed area unless it will provide an unobstructed opening of at least 1,290 cm^2 (200 in^2) formed by a rectangle 33 cm by 45 cm (13 inches by 17¾ inches). The maximum radius of the corner arcs shall not exceed 152 mm (6 inches). The long axis of the rectangle shall not make an angle of more than 45 degrees with the surface on which the unladen vehicle stands. The area shall be measured either by removal of the glazing if not of the push-out type, or of the movable sash if of the push-out type. The exit must comply with paragraph (d) of this section. Each side of the bus must have at least 40 percent of emergency exit space required by this paragraph.

(d) *Laminated safety glass/push-out window requirements for buses manufactured before September 1, 1973.* Emergency exit space used to satisfy the requirements of paragraph (c) of this section must have laminated safety glass or push-out windows designed and maintained to yield outward to provide a free opening.

(1) *Safety glass.* Laminated safety glass must meet Test No. 25, Egress, of American National Standard for Safety Glazing Materials for Glazing Motor Vehicles and Motor Vehicle Equipment Operating on Land Highways—Safety Standards ANSI/SAE Z26.1/96, August 1997. (See § 393.7 (b) for information on incorporation by reference and availability of this document.)

(2) *Push-out windows.* Each push-out window shall be releasable by operating no more than two mechanisms and allow manual release of the exit by a single occupant. For mechanisms which require rotary or straight (parallel to the undisturbed exit surface) motions to operate the exit, no more than 89 Newtons (20 pounds) of force shall be required to release the exit. For exits which require a straight motion perpendicular to the undisturbed exit surface, no more than 267 Newtons (60 pounds) shall be required to release the exit.

(e) *Emergency exit identification.* Each bus and each school bus used in interstate commerce for non-school bus operations, manufactured on or after September 1, 1973, shall meet the applicable emergency exit identification or marking requirements of FMVSS No. 217, S5.5, in effect on the date of manufacture. The emergency exits and doors on all buses (including school buses used in interstate commerce for non-school bus operations) must be marked ''Emergency Exit'' or ''Emergency

Door'' followed by concise operating instructions describing each motion necessary to unlatch or open the exit located within 152 mm (6 inches) of the release mechanism.

(f) *Exception for the transportation of prisoners.* The requirements of this section do not apply to buses used exclusively for the transportation of prisoners.

[70 FR 48052, Aug. 15, 2005]

§ 393.63 [Reserved]

Subpart E—Fuel Systems

AUTHORITY: Sec. 204, Interstate Commerce Act, as amended, 49 U.S.C. 304; sec. 6, Department of Transportation Act, 49 U.S.C. 1655; delegation of authority at 49 CFR 1.48 and 389.4.

§ 393.65 All fuel systems.

(a) *Application of the rules in this section.* The rules in this section apply to systems for containing and supplying fuel for the operation of motor vehicles or for the operation of auxiliary equipment installed on, or used in connection with, motor vehicles.

(b) *Location.* Each fuel system must be located on the motor vehicle so that—

(1) No part of the system extends beyond the widest part of the vehicle;

(2) No part of a fuel tank is forward of the front axle of a power unit;

(3) Fuel spilled vertically from a fuel tank while it is being filled will not contact any part of the exhaust or electrical systems of the vehicle, except the fuel level indicator assembly;

(4) Fill pipe openings are located outside the vehicle's passenger compartment and its cargo compartment;

(5) A fuel line does not extend between a towed vehicle and the vehicle that is towing it while the combination of vehicles is in motion; and

(6) No part of the fuel system of a bus manufactured on or after January 1, 1973, is located within or above the passenger compartment.

(c) *Fuel tank installation.* Each fuel tank must be securely attached to the motor vehicle in a workmanlike manner.

(d) *Gravity or syphon feed prohibited.* A fuel system must not supply fuel by gravity or syphon feed directly to the carburetor or injector.

(e) *Selection control valve location.* If a fuel system includes a selection control valve which is operable by the driver to regulate the flow of fuel from two or more fuel tanks, the valve must be installed so that either—

(1) The driver may operate it while watching the roadway and without leaving his/her driving position; or

(2) The driver must stop the vehicle and leave his/her seat in order to operate the valve.

(f) *Fuel lines.* A fuel line which is not completely enclosed in a protective housing must not extend more than 2 inches below the fuel tank or its sump. Diesel fuel crossover, return, and withdrawal lines which extend below the bottom of the tank or sump must be protected against damage from impact. Every fuel line must be—

(1) Long enough and flexible enough to accommodate normal movements of the parts to which it is attached without incurring damage; and

(2) Secured against chafing, kinking, or other causes of mechanical damage.

(g) *Excess flow valve.* When pressure devices are used to force fuel from a fuel tank, a device which prevents the flow of fuel from the fuel tank if the fuel feed line is broken must be installed in the fuel system.

[36 FR 15445, Aug. 14, 1971, as amended at 37 FR 4341, Mar. 2, 1972; 37 FR 28752, Dec. 29, 1972]

§ 393.67 Liquid fuel tanks.

(a) *Application of the rules in this section.* The rules in this section apply to tanks containing or supplying fuel for the operation of commercial motor vehicles or for the operation of auxiliary equipment installed on, or used in connection with commercial motor vehicles.

(1) A liquid fuel tank manufactured on or after January 1, 1973, and a side-mounted gasoline tank must conform to all rules in this section.

(2) A diesel fuel tank manufactured before January 1, 1973, and mounted on a bus must conform to the rules in paragraphs (c)(7)(iii) and (d)(2) of this section.

(3) A diesel fuel tank manufactured before January 1, 1973, and mounted on

a vehicle other than a bus must conform to the rules in paragraph (c)(7)(iii) of this section.

(4) A gasoline tank, other than a side-mounted gasoline tank, manufactured before January 1, 1973, and mounted on a bus must conform to the rules in paragraphs (c) (1) through (10) and (d)(2) of this section.

(5) A gasoline tank, other than a side-mounted gasoline tank, manufactured before January 1, 1973, and mounted on a vehicle other than a bus must conform to the rules in paragraphs (c) (1) through (10), inclusive, of this section.

(6) Private motor carrier of passengers. Motor carriers engaged in the private transportation of passengers may continue to operate a commercial motor vehicle which was not subject to this section or 49 CFR 571.301 at the time of its manufacture, provided the fuel tank of such vehicle is maintained to the original manufacturer's standards.

(7) Motor vehicles that meet the fuel system integrity requirements of 49 CFR 571.301 are exempt from the requirements of this subpart, as they apply to the vehicle's fueling system.

(b) *Definitions*. As used in this section—

(1) The term *liquid fuel tank* means a fuel tank designed to contain a fuel that is liquid at normal atmospheric pressures and temperatures.

(2) A *side-mounted* fuel tank is a liquid fuel tank which—

(i) If mounted on a truck tractor, extends outboard of the vehicle frame and outside of the plan view outline of the cab; or

(ii) If mounted on a truck, extends outboard of a line parallel to the longitudinal centerline of the truck and tangent to the outboard side of a front tire in a straight ahead position. In determining whether a fuel tank on a truck or truck tractor is side-mounted, the fill pipe is not considered a part of the tank.

(c) *Construction of liquid fuel tanks*—

(1) *Joints*. Joints of a fuel tank body must be closed by arc-, gas-, seam-, or spot-welding, by brazing, by silver soldering, or by techniques which provide heat resistance and mechanical securement at least equal to those specifically named. Joints must not be closed solely by crimping or by soldering with a lead-based or other soft solder.

(2) *Fittings*. The fuel tank body must have flanges or spuds suitable for the installation of all fittings.

(3) *Threads*. The threads of all fittings must be Dryseal American Standard Taper Pipe Thread or Dryseal SAE Short Taper Pipe Thread, specified in Society of Automotive Engineers Standard J476, as contained in the 1971 edition of the ''SAE Handbook,'' except that straight (nontapered) threads may be used on fittings having integral flanges and using gaskets for sealing. At least four full threads must be in engagement in each fitting.

(4) *Drains and bottom fittings*. (i) Drains or other bottom fittings must not extend more than three-fourths of an inch below the lowest part of the fuel tank or sump.

(ii) Drains or other bottom fittings must be protected against damage from impact.

(iii) If a fuel tank has drains the drain fittings must permit substantially complete drainage of the tank.

(iv) Drains or other bottom fittings must be installed in a flange or spud designed to accommodate it.

(5) *Fuel withdrawal fittings*. Except for diesel fuel tanks, the fittings through which fuel is withdrawn from a fuel tank must be located above the normal level of fuel in the tank when the tank is full.

(6) [Reserved]

(7) *Fill pipe*. (i) Each fill pipe must be designed and constructed to minimize the risk of fuel spillage during fueling operations and when the vehicle is involved in a crash.

(ii) For diesel-fueled vehicles, the fill pipe and vents of a fuel tank having a capacity of more than 94.75 L (25 gallons) of fuel must permit filling the tank with fuel at a rate of at least 75.8 L/m (20 gallons per minute) without fuel spillage.

(iii) For gasoline- and methanol-fueled vehicles with a GVWR of 3,744 kg (8,500 pounds) or less, the vehicle must permit filling the tank with fuel dispensed at the applicable fill rate required by the regulations of the Environmental Protection Agency under 40 CFR 80.22.

(iv) For gasoline- and methanol-fueled vehicles with a GVWR of 14,000 pounds (6,400 kg) or less, the vehicle must comply with the applicable fuel-spitback prevention and onboard refueling vapor recovery regulations of the Environmental Protection Agency under 40 CFR part 86.

(v) Each fill pipe must be fitted with a cap that can be fastened securely over the opening in the fill pipe. Screw threads or a bayonet-type point are methods of conforming to the requirements of paragraph (c) of this section.

(8) *Safety venting system.* A liquid fuel tank with a capacity of more than 25 gallons of fuel must have a venting system which, in the event the tank is subjected to fire, will prevent internal tank pressure from rupturing the tank's body, seams, or bottom opening (if any).

(9) *Pressure resistance.* The body and fittings of a liquid fuel tank with a capacity of more than 25 gallons of fuel must be capable of withstanding an internal hydrostatic pressure equal to 150 percent of the maximum internal pressure reached in the tank during the safety venting systems test specified in paragraph (d)(1) of this section.

(10) *Air vent.* Each fuel tank must be equipped with a nonspill air vent (such as a ball check). The air vent may be combined with the fill-pipe cap or safety vent, or it may be a separate unit installed on the fuel tank.

(11) *Markings.* If the body of a fuel tank is readily visible when the tank is installed on the vehicle, the tank must be plainly marked with its liquid capacity. The tank must also be plainly marked with a warning against filling it to more than 95 percent of its liquid capacity.

(12) *Overfill restriction.* A liquid fuel tank manufactured on or after January 1, 1973, must be designed and constructed so that—

(i) The tank cannot be filled, in a normal filling operation, with a quantity of fuel that exceeds 95 percent of the tank's liquid capacity; and

(ii) When the tank is filled, normal expansion of the fuel will not cause fuel spillage.

(d) *Liquid fuel tank tests.* Each liquid fuel tank must be capable of passing the tests specified in paragraphs (d)(1) and (2) of this section. The specified tests are a measure of performance only. Alternative procedures which assure that equipment meets the required performance standards may be used. .

(1) *Safety venting system test*—(i) *Procedure.* Fill the tank three-fourths full with fuel, seal the fuel feed outlet, and invert the tank. When the fuel temperature is between 50 °F. and 80 °F., apply an enveloping flame to the tank so that the temperature of the fuel rises at a rate of not less than 6 °F. and not more than 8 °F. per minute.

(ii) *Required performance.* The safety venting system required by paragraph (c)(8) of this section must activate before the internal pressure in the tank exceeds 50 pounds per square inch, gauge, and the internal pressure must not thereafter exceed the pressure at which the system activated by more than five pounds per square inch despite any further increase in the temperature of the fuel.

(2) *Leakage test*—(i) *Procedure.* Fill the tank to capacity with fuel having a temperature between 50 °F. and 80 °F. With the fill-pipe cap installed, turn the tank through an angle of 150° in any direction about any axis from its normal position.

(ii) *Required performance.* Neither the tank nor any fitting may leak more than a total of one ounce by weight of fuel per minute in any position the tank assumes during the test.

(e) *Side-mounted liquid fuel tank tests.* Each side-mounted liquid fuel tank must be capable of passing the tests specified in paragraphs (e)(1) and (2) of this section and the test specified in paragraphs (d)(1) and (2) of this section. The specified tests are a measure of performance only. Alternative procedures which assure that equipment meets the required performance criteria may be used.

(1) *Drop test*—(i) *Procedure.* Fill the tank with a quantity of water having a weight equal to the weight of the maximum fuel load of the tank and drop the tank 30 feet onto an unyielding surface so that it lands squarely on one corner.

(ii) *Required performance.* Neither the tank nor any fitting may leak more

than a total of 1 ounce by weight of water per minute.

(2) *Fill-pipe test*—(i) *Procedure*. Fill the tank with a quantity of water having a weight equal to the weight of the maximum fuel load of the tank and drop the tank 10 feet onto an unyielding surface so that it lands squarely on its fill-pipe.

(ii) *Required performance*. Neither the tank nor any fitting may leak more than a total of 1 ounce by weight of water per minute.

(f) *Certification and markings*. Each liquid fuel tank shall be legibly and permanently marked by the manufacturer with the following minimum information:

(1) The month and year of manufacture,

(2) The manufacturer's name on tanks manufactured on and after July 1, 1989, and means of identifying the facility at which the tank was manufactured, and

(3) A certificate that it conforms to the rules in this section applicable to the tank. The certificate must be in the form set forth in either of the following:

(i) If a tank conforms to all rules in this section pertaining to side-mounted fuel tanks: ''Meets all FMCSA side-mounted tank requirements.''

(ii) If a tank conforms to all rules in this section pertaining to tanks which are not side-mounted fuel tanks: ''Meets all FMCSA requirements for non-side-mounted fuel tanks.''

(iii) The form of certificate specified in paragraph (f)(3) (i) or (ii) of this section may be used on a liquid fuel tank manufactured before July 11, 1973, but it is not mandatory for liquid fuel tanks manufactured before March 7, 1989. The form of certification manufactured on or before March 7, 1989, must meet the requirements in effect at the time of manufacture.

(4) *Exception*. The following previously exempted vehicles are *not* required to carry the certification and marking specified in paragraphs (f)(1) through (3) of this section:

(i) Ford vehicles with GVWR over 10,000 pounds identified as follows: The vehicle identification numbers (VINs) contain A, K, L, M, N, W, or X in the fourth position.

(ii) GM G-Vans (Chevrolet Express and GMC Savanna) and full-sized C/K trucks (Chevrolet Silverado and GMC Sierra) with GVWR over 10,000 pounds identified as follows: The VINs contain either a ''J'' or a ''K'' in the fourth position. In addition, the seventh position of the VINs on the G-Van will contain a ''1.''

[36 FR 15445, Aug. 14, 1971, as amended at 37 FR 4341, Mar. 2, 1972; 37 FR 28753, Dec. 29, 1972; 45 FR 46424, July 10, 1980; 53 FR 49400, Dec. 7, 1988; 59 FR 8753, Feb. 23, 1994; 69 FR 31305, June 3, 2004; 70 FR 48053, Aug. 15, 2005]

§ 393.68 Compressed natural gas fuel containers.

(a) *Applicability*. The rules in this section apply to compressed natural gas (CNG) fuel containers used for supplying fuel for the operation of commercial motor vehicles or for the operation of auxiliary equipment installed on, or used in connection with commercial motor vehicles.

(b) *CNG containers manufactured on or after March 26, 1995*. Any motor vehicle manufactured on or after March 26, 1995, and equipped with a CNG fuel tank must meet the CNG container requirements of FMVSS No. 304 (49 CFR 571.304) in effect at the time of manufacture of the vehicle.

(c) *Labeling*. Each CNG fuel container shall be permanently labeled in accordance with the requirements of FMVSS No. 304, S7.4.

[70 FR 48053, Aug. 15, 2005]

§ 393.69 Liquefied petroleum gas systems.

(a) A fuel system that uses liquefied petroleum gas as a fuel for the operation of a motor vehicle or for the operation of auxiliary equipment installed on, or used in connection with, a motor vehicle must conform to the ''Standards for the Storage and Handling of Liquefied Petroleum Gases'' of the National Fire Protection Association, Battery March Park, Quincy, MA 02269, as follows:

(1) A fuel system installed before December 31, 1962, must conform to the 1951 edition of the Standards.

(2) A fuel system installed on or after December 31, 1962, and before January 1, 1973, must conform to Division IV of the June 1959 edition of the Standards.

(3) A fuel system installed on or after January 1, 1973, and providing fuel for propulsion of the motor vehicle must conform to Division IV of the 1969 edition of the Standards.

(4) A fuel system installed on or after January 1, 1973, and providing fuel for the operation of auxiliary equipment must conform to Division VII of the 1969 edition of the Standards.

(b) When the rules in this section require a fuel system to conform to a specific edition of the Standards, the fuel system may conform to the applicable provisions in a later edition of the Standards specified in this section.

(c) The tank of a fuel system must be marked to indicate that the system conforms to the Standards.

[36 FR 15445, Aug. 14, 1971, as amended at 37 FR 4342, Mar. 2, 1972; 41 FR 53031, Dec. 3, 1976; 53 FR 49400, Dec. 7, 1988]

Subpart F—Coupling Devices and Towing Methods

§ 393.70 Coupling devices and towing methods, except for driveaway-towaway operations.

(a) *Tracking*. When two or more vehicles are operated in combination, the coupling devices connecting the vehicles shall be designed, constructed, and installed, and the vehicles shall be designed and constructed, so that when the combination is operated in a straight line on a level, smooth, paved surface, the path of the towed vehicle will not deviate more than 3 inches to either side of the path of the vehicle that tows it.

(b) *Fifth wheel assemblies*—(1) *Mounting*—(i) *Lower half*. The lower half of a fifth wheel mounted on a truck tractor or converter dolly must be secured to the frame of that vehicle with properly designed brackets, mounting plates or angles and properly tightened bolts of adequate size and grade, or devices that provide equivalent security. The installation shall not cause cracking, warping, or deformation of the frame. The installation must include a device for positively preventing the lower half of the fifth wheel from shifting on the frame to which it is attached.

(ii) *Upper half*. The upper half of a fifth wheel must be fastened to the motor vehicle with at least the same security required for the installation of the lower half on a truck tractor or converter dolly.

(2) *Locking*. Every fifth wheel assembly must have a locking mechanism. The locking mechanism, and any adapter used in conjunction with it, must prevent separation of the upper and lower halves of the fifth wheel assembly unless a positive manual release is activated. The release may be located so that the driver can operate it from the cab. If a motor vehicle has a fifth wheel designed and constructed to be readily separable, the fifth wheel locking devices shall apply automatically on coupling.

(3) *Location*. The lower half of a fifth wheel shall be located so that, regardless of the condition of loading, the relationship between the kingpin and the rear axle or axles of the towing motor vehicle will properly distribute the gross weight of both the towed and towing vehicles on the axles of those vehicles, will not unduly interfere with the steering, braking, and other maneuvering of the towing vehicle, and will not otherwise contribute to unsafe operation of the vehicles comprising the combination. The upper half of a fifth wheel shall be located so that the weight of the vehicles is properly distributed on their axles and the combination of vehicles will operate safely during normal operation.

(c) *Towing of full trailers*. A full trailer must be equipped with a tow-bar and a means of attaching the tow-bar to the towing and towed vehicles. The tow-bar and the means of attaching it must—

(1) Be structurally adequate for the weight being drawn;

(2) Be properly and securely mounted;

(3) Provide for adequate articulation at the connection without excessive slack at that location; and

(4) Be provided with a locking device that prevents accidental separation of the towed and towing vehicles. The mounting of the trailer hitch (pintle hook or equivalent mechanism) on the towing vehicle must include reinforcement or bracing of the frame sufficient to produce strength and rigidity of the frame to prevent its undue distortion.

(d) *Safety devices in case of tow-bar failure or disconnection*. Every full trailer and every converter dolly used to convert a semitrailer to a full trailer must be coupled to the frame, or an extension of the frame, of the motor vehicle which tows it with one or more safety devices to prevent the towed vehicle from breaking loose in the event the tow-bar fails or becomes disconnected. The safety device must meet the following requirements:

(1) The safety device must not be attached to the pintle hook or any other device on the towing vehicle to which the tow-bar is attached. However, if the pintle hook or other device was manufactured prior to July 1, 1973, the safety device may be attached to the towing vehicle at a place on a pintle hook forging or casting if that place is independent of the pintle hook.

(2) The safety device must have no more slack than is necessary to permit the vehicles to be turned properly.

(3) The safety device, and the means of attaching it to the vehicles, must have an ultimate strength of not less than the gross weight of the vehicle or vehicles being towed.

(4) The safety device must be connected to the towed and towing vehicles and to the tow-bar in a manner which prevents the tow-bar from dropping to the ground in the event it fails or becomes disconnected.

(5) Except as provided in paragraph (d)(6) of this section, if the safety device consists of safety chains or cables, the towed vehicle must be equipped with either two safety chains or cables or with a bridle arrangement of a single chain or cable attached to its frame or axle at two points as far apart as the configuration of the frame or axle permits. The safety chains or cables shall be either two separate pieces, each equipped with a hook or other means for attachment to the towing vehicle, or a single piece leading along each side of the tow-bar from the two points of attachment on the towed vehicle and arranged into a bridle with a single means of attachment to be connected to the towing vehicle. When a single length of cable is used, a thimble and twin-base cable clamps shall be used to form the forward bridle eye. The hook or other means of attachment to the towing vehicle shall be secured to the chains or cables in a fixed position.

(6) If the towed vehicle is a converter dolly with a solid tongue and without a hinged tow-bar or other swivel between the fifth wheel mounting and the attachment point of the tongue eye or other hitch device—

(i) Safety chains or cables, when used as the safety device for that vehicle, may consist of either two chains or cables or a single chain or cable used alone;

(ii) A single safety device, including a single chain or cable used alone as the safety device, must be in line with the centerline of the trailer tongue; and

(iii) The device may be attached to the converter dolly at any point to the rear of the attachment point of the tongue eye or other hitch device.

(7) Safety devices other than safety chains or cables must provide strength, security of attachment, and directional stability equal to, or greater than, safety chains or cables installed in accordance with paragraphs (d) (5) and (6) of this section.

(8)(i) When two safety devices, including two safety chains or cables, are used and are attached to the towing vehicle at separate points, the points of attachment on the towing vehicle shall be located equally distant from, and on opposite sides of, the longitudinal centerline of the towing vehicle.

(ii) Where two chains or cables are attached to the same point on the towing vehicle, and where a bridle or a single chain or cable is used, the point of attachment must be on the longitudinal centerline or within 152 mm (6 inches) to the right of the longitudinal centerline of the towing vehicle.

(iii) A single safety device, other than a chain or cable, must also be attached to the towing vehicle at a point on the longitudinal centerline or within 152 mm (6 inches) to the right of the longitudinal centerline of the towing vehicle.

[37 FR 21439, Oct. 11, 1972, as amended at 70 FR 48053, Aug. 15, 2005]

§ 393.71 Coupling devices and towing methods, driveaway-towaway operations.

(a) *Number in combination.* (1) No more than three saddle-mounts may be used in any combination.

(2) No more than one tow-bar or ball-and-socket type coupling device may be used in any combination.

(3) When motor vehicles are towed by means of triple saddle-mounts, the towed vehicles shall have brakes acting on all wheels which are in contact with the roadway.

(b) *Carrying vehicles on towing vehicle.* (1) When adequately and securely attached by means equivalent in security to that provided in paragraph (j)(2) of this section, a motor vehicle or motor vehicles may be full-mounted on the structure of a towing vehicle engaged in any driveaway-towaway operation.

(2) No motor vehicle or motor vehicles may be full-mounted on a towing vehicle unless the relationship of such full-mounted vehicles to the rear axle or axles results in proper distribution of the total gross weight of the vehicles and does not unduly interfere with the steering, braking, or maneuvering of the towing vehicle, or otherwise contribute to the unsafe operation of the vehicles comprising the combination.

(3) Saddle-mounted vehicles must be arranged such that the gross weight of the vehicles is properly distributed to prevent undue interference with the steering, braking, or maneuvering of the combination of vehicles.

(c) *Carrying vehicles on towed vehicles.* (1) When adequately and securely attached by means equivalent in security to that provided in paragraph (j)(2) of this section, a motor vehicle or motor vehicles may be full-mounted on the structure of towed vehicles engaged in any driveaway-towaway operation.

(2) No motor vehicle shall be full-mounted on a motor vehicle towed by means of a tow-bar unless the towed vehicle is equipped with brakes and is provided with means for effective application of brakes acting on all wheels and is towed on its own wheels.

(3) No motor vehicle or motor vehicles shall be full-mounted on a motor vehicle towed by means of a saddle-mount unless the center line of the kingpin or equivalent means of attachment of such towed vehicle shall be so located on the towing vehicle that the relationship to the rear axle or axles results in proper distribution of the total gross weight of the vehicles and does not unduly interfere with the steering, braking, or maneuvering of the towing vehicle or otherwise contribute to the unsafe operation of vehicles comprising the combination; and unless a perpendicular to the ground from the center of gravity of the full-mounted vehicles lies forward of the center line of the rear axle of the saddle-mounted vehicle.

(4) If a motor vehicle towed by means of a double saddle-mount has any vehicle full-mounted on it, such saddle-mounted vehicle shall at all times while so loaded have effective brakes acting on those wheels which are in contact with the roadway.

(d) *Bumper tow-bars on heavy vehicles prohibited.* Tow-bars of the type which depend upon the bumpers as a means of transmitting forces between the vehicles shall not be used to tow a motor vehicle weighing more than 5,000 pounds.

(e) *Front wheels of saddle-mounted vehicles restrained.* A motor vehicle towed by means of a saddle-mount shall have the motion of the front wheels restrained if under any condition of turning of such wheels they will project beyond the widest part of either the towed or towing vehicle.

(f) *Vehicles to be towed in forward position.* Unless the steering mechanism is adequately locked in a straight-forward position, all motor vehicles towed by means of a saddle-mount shall be towed with the front end mounted on the towing vehicle.

(g) *Means required for towing.* No motor vehicles or combination of motor vehicles shall be towed in driveaway-towaway operations by means other than a tow-bar, ball-and-socket type coupling device, saddle-mount connections which meet the requirements of this section, or in the case of a semi-trailer equipped with an upper coupler assembly, a fifth-wheel meeting the requirements of § 393.70.

(h) *Requirements for tow-bars.* Tow-bars shall comply with the following requirements:

(1) *Tow-bars, structural adequacy and mounting.* Every tow-bar shall be structurally adequate and properly installed and maintained. To insure that it is structurally adequate, it must, at least, meet the requirements of the following table:

Gross weight of towed vehicle (pounds) [1]	Longitudinal strength in tension and compression [2]		
	All tow-bars	New tow-bars acquired and used by a motor carrier after Sept. 30, 1948	Strength as a beam (in any direction concentrated load at center) [2, 3]
	Pounds		
Less than 5,000	3,000	6,500	3,000
5,000 and over	.....	.....	.....
Less than 10,000	6,000	([1])	([1])
10,000 and over	.....	.....	.....
Less than 15,000	9,000	([1])	([1])

[1] The required strength of tow-bars for towed vehicles of 15,000 pounds and over gross weight and of new tow-bars acquired and used after Sept. 30, 1948, for towed vehicles of 5,000 pounds and over gross weight shall be computed by means of the following formulae: Longitudinal strength=gross weight of towed vehicle × 1.3. Strength as a beam=gross weight of towed vehicle × 0.6.

[2] In testing, the whole unit shall be tested with all clamps, joints, and pins so mounted and fastened as to approximate conditions of actual operation.

[3] This test shall be applicable only to tow-bars which are, in normal operation, subjected to a bending movement such as tow-bars for house trailers.

(2) *Tow-bars, jointed.* The tow-bar shall be so constructed as to freely permit motion in both horizontal and vertical planes between the towed and towing vehicles. The means used to provide the motion shall be such as to prohibit the transmission of stresses under normal operation between the towed and towing vehicles, except along the longitudinal axis of the tongue or tongues.

(3) *Tow-bar fastenings.* The means used to transmit the stresses to the chassis or frames of the towed and towing vehicles may be either temporary structures or bumpers or other integral parts of the vehicles: *Provided, however,* That the means used shall be so constructed, installed, and maintained that when tested as an assembly, failure in such members shall not occur when the weakest new tow-bar which is permissible under paragraph (h)(1) of this section is subjected to the tests given therein.

(4) *Means of adjusting length.* On tow-bars, adjustable as to length, the means used to make such adjustment shall fit tightly and not result in any slackness or permit the tow-bar to bend. With the tow-bar supported rigidly at both ends and with a load of 50 pounds at the center, the sag, measured at the center, in any direction shall not exceed 0.25 inch under any condition of adjustment as to length.

(5) *Method of clamping.* Adequate means shall be provided for securely fastening the tow-bar to the towed and towing vehicles.

(6) *Tow-bar connection to steering mechanism.* The tow-bar shall be provided with suitable means of attachment to and actuation of the steering mechanism, if any, of the towed vehicle. The attachment shall provide for sufficient angularity of movement of the front wheels of the towed vehicle so that it may follow substantially in the path of the towing vehicle without cramping the tow-bar. The tow-bar shall be provided with suitable joints to permit such movement.

(7) *Tracking.* The tow-bar shall be so designed, constructed, maintained, and mounted as to cause the towed vehicle to follow substantially in the path of the towing vehicle. Tow-bars of such design on in our condition as to permit the towed vehicle to deviate more than 3 inches to either side of the path of a towing vehicle moving in a straight line as measured from the center of the towing vehicle are prohibited.

(8) *Passenger car-trailer type couplings.* Trailer couplings used for driveaway-towaway operations of passenger car trailers shall conform to Society of Automotive Engineers Standard No. J684c, ''Trailer Couplings and Hitches—Automotive Type,'' July 1970. [1]

(9) *Marking tow-bars.* Every tow-bar acquired and used in driveaway-towaway operations by a motor carrier shall be plainly marked with the following certification of the manufacturer thereof (or words of equivalent meaning):

This tow-bar complies with the requirements of the Federal Motor Carrier Safety Administration for (maximum gross weight for which tow-bar is manufactured) vehicles.
Allowable Maximum Gross Weight _____
Manufactured _____
(month and year)
by _____

[1] See footnote 1 to § 393.24(c).

(name of manufacturer)

Tow-bar certification manufactured before the effective date of this regulation must meet requirements in effect at the time of manufacture.

(10) *Safety devices in case of tow-bar failure or disconnection.* (i) The towed vehicle shall be connected to the towing vehicle by a safety device to prevent the towed vehicle from breaking loose in the event the tow-bar fails or becomes disconnected. When safety chains or cables are used as the safety device for that vehicle, at least two safety chains or cables meeting the requirements of paragraph (h)(10)(ii) of this section shall be used. The tensile strength of the safety device and the means of attachment to the vehicles shall be at least equivalent to the corresponding longitudinal strength for tow-bars required in the table of paragraph (h)(1) of this section. If safety chains or cables are used as the safety device, the required strength shall be the combined strength of the combination of chains and cables.

(ii) If chains or cables are used as the safety device, they shall be crossed and attached to the vehicles near the points of bumper attachments to the chassis of the vehicles. The length of chain used shall be no more than necessary to permit free turning of the vehicles. The chains shall be attached to the tow-bar at the point of crossing or as close to that point as is practicable.

(iii) A safety device other than safety chains or cables must provide strength, security of attachment, and directional stability equal to, or greater than, that provided by safety chains or cables installed in accordance with paragraph (h)(10)(ii) of this section. A safety device other than safety chains or cables must be designed, constructed, and installed so that, if the tow-bar fails or becomes disconnected, the tow-bar will not drop to the ground.

(i) [Reserved]

(j) *Requirements for upper-half of saddle-mounts.* The upper-half of any saddle-mount shall comply with the following requirements:

(1) *Upper-half connection to towed vehicle.* The upper-half shall be securely attached to the frame or axle of the towed vehicle by means of U-bolts or other means providing at least equivalent security.

(2) U-*bolts or other attachments.* U-bolts used to attach the upper half to the towed vehicle shall be made of steel rod, free of defects, so shaped as to avoid at any point a radius of less than 1 inch: *Provided, however,* That a lesser radius may be utilized if the U-bolt is so fabricated as not to cause more than 5 percent reduction in cross-sectional area at points of curvature, in which latter event the minimum radius shall be one-sixteenth inch. U-bolts shall have a diameter not less than required by the following table:

DIAMETER OF U-BOLTS IN INCHES

Weight in pounds of heaviest towed vehicle	Double or triple saddle-mount			
	Front mount	Middle or front mount	Rear mount	Single saddle-mount [1]
Up to 5,000	0.625	0.5625	0.500	0.500
5,000 and over	0.6875	0.625	0.5625	0.5625

[1] The total weight of all the vehicles being towed shall govern. If other devices are used to accomplish the same purposes as U-bolts they shall have at least equivalent strength of U-bolts made of mild steel. Cast iron shall not be used for clamps or any other holding devices.

(3) U-*bolts and points of support, location.* The distance between the most widely separated U-bolts shall not be less than 9 inches. The distance between the widely separated points where the upper-half supports the towed vehicle shall not be less than 9 inches, except that saddle-mounts employing ball and socket joints shall employ a device which clamps the axle of the towed vehicle throughout a length of not less than 5 inches.

(4) *Cradle-type upper-halves, specifications.* Upper-halves of the cradle-type using vertical members to restrain the towed vehicle from relative movement in the direction of motion of the vehicles shall be substantially constructed and adequate for the purpose. Such cradle-mounts shall be equipped with at least one bolt or equivalent means to provide against relative vertical movement between the upper-half and the towed vehicle. Bolts, if used, shall be at least one-half inch in diameter. Devices using equivalent means shall have at least equivalent strength. The means used to provide against relative vertical motion between the upper-half and the towed vehicle shall be such as not to permit a relative motion of over

one-half inch. The distance between the most widely separated points of support between the upper-half and the towed vehicle shall be at least 9 inches.

(5) *Lateral movement of towed vehicle.* (i) Towed vehicles having a straight axle or an axle having a drop of less than 3 inches, unless the saddle-mount is constructed in accordance with paragraph (m)(2) of this section, shall be securely fastened by means of chains or cables to the upper-half so as to insure against relative lateral motion between the towed vehicle and the upper-half. The chains or cables shall be at least 3/16-inch diameter and secured by bolts of at least equal diameter.

(ii) Towed vehicles with an axle with a drop of 3 inches or more, or connected by a saddle-mount constructed in accordance with paragraph (m)(2) of this section, need not be restrained by chains or cables provided that the upper-half is so designed as to provide against such relative motion.

(iii) Chains or cables shall not be required if the upper-half is so designed as positively to provide against lateral movement of the axle.

(k) *Requirements for lower half of saddle-mounts.* The lower half of any saddle-mount shall comply with the following requirements:

(1) U-*bolts or other attachments.* U-bolts used to attach the lower half to the towing vehicle shall be made of steel rod, free of defects, so shaped as to avoid at any point a radius of less than 1 inch: *Provided, however,* That a lesser radius may be utilized if the U-bolt is so fabricated as not to cause more than 5 percent reduction in cross-sectional area at points of curvature, in which latter event the minimum radius shall be one-sixteenth inch. U-bolts shall have a total cross-sectional area not less than as required by the following table:

TOTAL CROSS-SECTIONAL AREA OF U-BOLTS IN SQUARE INCHES

Weight in pounds of heaviest towed vehicle	Double or triple saddle-mount			
	Front mount	Middle or front mount	Rear mount	Single saddle-mount [1]
Up to 5,000	1.2	1.0	0.8	0.8

TOTAL CROSS-SECTIONAL AREA OF U-BOLTS IN SQUARE INCHES—Continued

Weight in pounds of heaviest towed vehicle	Double or triple saddle-mount			
	Front mount	Middle or front mount	Rear mount	Single saddle-mount [1]
5,000 and over	1.4	1.2	1.0	1.0

[1] The total weight of all the vehicles being towed shall govern. If other devices are used to accomplish the same purposes as U-bolts they shall have at least equivalent strength of U-bolts made of mild steel. Cast iron shall not be used for clamps or any other holding devices.

(2) *Shifting.* Adequate provision shall be made by design and installation to provide against relative movement between the lower-half and the towing vehicle especially during periods of rapid acceleration and deceleration. To insure against shifting, designs of the tripod type shall be equipped with adequate and securely fastened hold-back chains or similar devices.

(3) *Swaying.* (i) Adequate provision shall be made by design and installation to provide against swaying or lateral movement of the towed vehicle relative to the towing vehicle. To insure against swaying, lower-halves designed with cross-members attached to but separable from vertical members shall have such cross-members fastened to the vertical members by at least two bolts on each side. Such bolts shall be of at least equivalent cross-sectional area as those required for U-bolts for the corresponding saddle-mount as given in the table in paragraph (k)(1) of this section. The minimum distance between the most widely separated points of support of the cross-member by the vertical member shall be three inches as measured in a direction parallel to the longitudinal axis of the towing vehicle.

(ii) The lower-half shall have a bearing surface on the frame of the towing vehicle of such dimensions that the pressure exerted by the lower-half upon the frame of the towing vehicle shall not exceed 200 pounds per square inch under any conditions of static loading. Hardwood blocks or blocks of other suitable material, such as hard rubber, aluminum or brakelining, if used between the lower half and the frame of the towing vehicle shall be at least ½ inch thick, 3 inches wide, and a combined length of 6 inches.

(iii) Under no condition shall the highest point of support of the towed vehicle by the upper-half be more than 24 inches, measured vertically, above the top of the frame of the towing vehicle, measured at the point where the lower-half rests on the towing vehicle.

(4) *Wood blocks.* (i) Hardwood blocks of good quality may be used to build up the height of the front end of the towed vehicle, provided that the total height of such wood blocks shall not exceed 8 inches and not over two separate pieces are placed upon each other to obtain such height; however, hardwood blocks, not over 4 in number, to a total height not to exceed 14 inches, may be used if the total cross-sectional area of the U-bolts used to attach the lower-half of the towing vehicle is at least 50 percent greater than that required by the table contained in paragraph (k)(1) of this section, or, if other devices are used in lieu of U-bolts, they shall provide for as great a resistance to bending as is provided by the larger U-bolts above prescribed.

(ii) Hardwood blocks must be at least 4 inches in width and the surfaces between blocks or block and lower-half or block and upper-half shall be planed and so installed and maintained as to minimize any tendency of the towed vehicle to sway or rock.

(5) *Cross-member, general requirements.* The cross-member, which is that part of the lower-half used to distribute the weight of the towed vehicle equally to each member of the frame of the towing vehicle, if used, shall be structurally adequate and properly installed and maintained adequately to perform this function.

(6) *Cross-member, use of wood.* No materials, other than suitable metals, shall be used as the cross-member, and wood may not be used structurally in any manner that will result in its being subject to tensile stresses. Wood may be used in cross-members if supported throughout its length by suitable metal cross-members.

(7) *Lower half strength.* The lower half shall be capable of supporting the loads given in the following table. For the purpose of test, the saddle-mount shall be mounted as normally operated and the load applied through the upper half:

MINIMUM TEST LOAD IN POUNDS

Weight in pounds of heaviest towed vehicle	Double or triple saddle-mount			
	Front mount	Middle or front mount	Rear mount	Single saddle-mount [1]
Up to 5,000	15,000	10,000	5,000	5,000
5,000 and over	30,000	20,000	10,000	10,000

[1] The total weight of all the vehicles being towed shall govern.

(l) *Requirements for kingpins of saddle-mounts.* The kingpin of any saddle-mount shall comply with the following requirements:

(1) *Kingpin size.* (i) Kingpins shall be constructed of steel suitable for the purpose, free of defects, and having a diameter not less than required by the following table:

DIAMETER OF SOLID KINGPIN IN INCHES

Weight in pounds of heaviest towed vehicle	Double or triple saddle-mount							
	Front mount		Middle or front mount		Rear mount		Single saddle-mount [1]	
	Mild steel	H.T.S.[2]	Mild steel	H.T.S.[2]	Mild steel	H.T.S.[2]	Mild steel	H.T.S.
Up to 5,000	1.125	1.000	1.000	0.875	0.875	0.750	0.875	0.750
5,000 and over	1.500	1.125	1.250	1.000	1.000	0.875	1.000	0.875

[1] The total weight of all the vehicles being towed shall govern.
[2] High-tensile steel is steel having a minimum ultimate strength of 65,000 pounds per square inch.

(ii) If a ball and socket joint is used in place of a kingpin, the diameter of the neck of the ball shall be at least equal to the diameter of the corresponding solid kingpin given in the above table. If hollow kingpins are used, the metallic cross-sectional area shall be at least equal to the cross-sectional area of the corresponding solid kingpin.

(2) *Kingpin fit.* If a kingpin bushing is not used, the king-pin shall fit snugly

into the upper and lower-halves but shall not bind. Those portions of the upper or lower-halves in moving contact with the kingpin shall be smoothly machined with no rough or sharp edges. The bearing surface thus provided shall not be less in depth than the radius of the kingpin.

(3) *Kingpin bushing on saddle-mounts.* The kingpin of all new saddle-mounts acquired and used shall be snugly enclosed in a bushing at least along such length of the kingpin as may be in moving contact with either the upper or lower-halves. The bearing surface thus provided shall not be less in depth than the radius of the kingpin.

(4) *Kingpin to restrain vertical motion.* The kingpin shall be so designed and installed as to restrain the upper-half from moving in a vertical direction relative to the lower-half.

(m) *Additional requirements for saddle-mounts.* Saddle-mounts shall comply with the following requirements:

(1) *Bearing surface between upper and lower-halves.* The upper and lower-halves shall be so constructed and connected that the bearing surface between the two halves shall not be less than 16 square inches under any conditions of angularity between the towing and towed vehicles: *Provided, however,* That saddle-mounts using a ball and socket joint shall have a ball of such dimension that the static bearing load shall not exceed 800 pounds per square inch, based on the projected cross-sectional area of the ball: *And further provided,* That saddle-mounts having the upper-half supported by ball, taper, or roller-bearings shall not have such bearings loaded beyond the limits prescribed for such bearings by the manufacturer thereof. The upper-half shall rest evenly and smoothly upon the lower-half and the contact surfaces shall be lubricated and maintained so that there shall be a minimum of frictional resistance between the parts.

(2) *Saddle-mounts, angularity.* All saddle-mounts acquired and used shall provide for angularity between the towing and towed vehicles due to vertical curvatures of the highway. Such means shall not depend upon either the looseness or deformation of the parts of either the saddle-mount or the vehicles to provide for such angularity.

(3) *Tracking.* The saddle-mount shall be so designed, constructed, maintained, and installed that the towed vehicle or vehicles will follow substantially in the path of the towing vehicle without swerving. Towed vehicles shall not deviate more than 3 inches to either side of the path of the towing vehicle when moving in a straight line.

(4) *Prevention of frame bending.* Where necessary, provision shall be made to prevent the bending of the frame of the towing vehicle by insertion of suitable blocks inside the frame channel to prevent kinking. The saddle-mount shall not be so located as to cause deformation of the frame by reason of cantilever action.

(5) *Extension of frame.* No saddle-mount shall be located at a point to the rear of the frame of a towing vehicle.

(6) *Nuts, secured.* All nuts used on bolts, U-bolts, king-pins, or in any other part of the saddle-mount shall be secured against accidental disconnection by means of cotter-keys, lock-washers, double nuts, safety nuts, or equivalent means. Parts shall be so designed and installed that nuts shall be fully engaged.

(7) *Inspection of all parts.* The saddle-mount shall be so designed that it may be disassembled and each separate part inspected for worn, bent, cracked, broken, or missing parts.

(8) *Saddle-mounts, marking.* Every new saddle-mount acquired and used in driveaway-towaway operations by a motor carrier shall have the upper-half and the lower-half separately marked with the following certification of the manufacturer thereof (or words of equivalent meaning).

This saddle-mount complies with the requirements of the Federal Motor Carrier Safety Administration for vehicles up to 5,000 pounds (or over 5,000 pounds):

Manufactured _____
(Month and year)

by _____
(Name of manufacturer)

(n) *Requirements for devices used to connect motor vehicles or parts of motor vehicles together to form one vehicle*—(1) *Front axle attachment.* The front axle of

one motor vehicle intended to be coupled with another vehicle as defined in paragraph (g)(2)(ii) of this section shall be attached with U-bolts meeting the requirements of paragraph (j)(2) of this section.

(2) *Rear axle attachment.* The rear axle of one vehicle shall be coupled to the frame of the other vehicle by means of a connecting device which when in place forms a rectangle. The device shall be composed of two pieces, top and bottom. The device shall be made of 4-inch by ½-inch steel bar bent to shape and shall have the corners reinforced with a plate at least 3 inches by ½ inch by 8 inches long. The device shall be bolted together with ¾-inch bolts and at least three shall be used on each side. Wood may be used as spacers to keep the frames apart and it shall be at least 4 inches square.

(Sec. 12, 80 Stat. 931; 49 U.S.C. 1651 note; section 6 of the Department of Transportation Act, 49 U.S.C. 1655, and the delegations of authority at 49 CFR 1.48 and 389.4)

[33 FR 19735, Dec. 25, 1968, as amended at 35 FR 10907, July 7, 1970; 37 FR 21440, Oct. 11, 1972; 53 FR 49400, Dec. 7, 1988; 70 FR 48054, Aug. 15, 2005]

Subpart G—Miscellaneous Parts and Accessories

§ 393.75 Tires.

(a) No motor vehicle shall be operated on any tire that (1) has body ply or belt material exposed through the tread or sidewall, (2) has any tread or sidewall separation, (3) is flat or has an audible leak, or (4) has a cut to the extent that the ply or belt material is exposed.

(b) Any tire on the front wheels of a bus, truck, or truck tractor shall have a tread groove pattern depth of at least 4/32 of an inch when measured at any point on a major tread groove. The measurements shall not be made where tie bars, humps, or fillets are located.

(c) Except as provided in paragraph (b) of this section, tires shall have a tread groove pattern depth of at least 2/32 of an inch when measured in a major tread groove. The measurement shall not be made where tie bars, humps or fillets are located.

(d) No bus shall be operated with regrooved, recapped or retreaded tires on the front wheels.

(e) A regrooved tire with a load-carrying capacity equal to or greater than 2,232 kg (4,920 pounds) shall not be used on the front wheels of any truck or truck tractor.

(f) *Tire loading restrictions (except on manufactured homes).* No motor vehicle (except manufactured homes, which are governed by paragraph (g) of this section) shall be operated with tires that carry a weight greater than that marked on the sidewall of the tire or, in the absence of such a marking, a weight greater than that specified for the tires in any of the publications of any of the organizations listed in Federal Motor Vehicle Safety Standard No. 119 (49 CFR 571.119, S5.1(b)) unless:

(1) The vehicle is being operated under the terms of a special permit issued by the State; and

(2) The vehicle is being operated at a reduced speed to compensate for the tire loading in excess of the manufacturer's rated capacity for the tire. In no case shall the speed exceed 80 km/hr (50 mph).

(g)(1) *Tire loading restrictions for manufactured homes built before January 1, 2002.* Manufactured homes that are labeled pursuant to 24 CFR 3282.362(c)(2)(i) before January 1, 2002, must not be transported on tires that are loaded more than 18 percent over the load rating marked on the sidewall of the tire or, in the absence of such a marking, more than 18 percent over the load rating specified in any of the publications of any of the organizations listed in FMVSS No. 119 (49 CFR 571.119, S5.1(b)). Manufactured homes labeled before January 1, 2002, transported on tires overloaded by 9 percent or more must not be operated at speeds exceeding 80 km/hr (50 mph).

(2) *Tire loading restrictions for manufactured homes built on or after January 1, 2002.* Manufactured homes that are labeled pursuant to 24 CFR 3282.362(c)(2)(i) on or after January 1, 2002, must not be transported on tires loaded beyond the load rating marked on the sidewall of the tire or, in the absence of such a marking, the load rating specified in any of the publications

of any of the organizations listed in FMVSS No. 119 (49 CFR 571.119, S5.1(b)).

(h) *Tire inflation pressure.* (1) No motor vehicle shall be operated on a tire which has a cold inflation pressure less than that specified for the load being carried.

(2) If the inflation pressure of the tire has been increased by heat because of the recent operation of the vehicle, the cold inflation pressure shall be estimated by subtracting the inflation buildup factor shown in Table 1 from the measured inflation pressure.

TABLE 1—INFLATION PRESSURE MEASUREMENT CORRECTION FOR HEAT

Average speed of vehicle in the previous hour	Minimum inflation pressure buildup	
	Tires with 1,814 kg (4,000 lbs.) maximum load rating or less	Tires with over 1,814 kg (4,000 lbs.) load rating
66–88.5 km/hr (41–55 mph).	34.5 kPa (5 psi) ...	103.4 kPa (15 psi).

[34 FR 9344, June 13, 1969, as amended at 40 FR 44557, Sept. 29, 1975; 41 FR 36657, Aug. 31, 1976; 44 FR 25455, May 1, 1979; 44 FR 47938, Aug. 16, 1979; 53 FR 18057, May 19, 1988; 53 FR 49401, Dec. 7, 1988; 63 FR 8339, Feb. 18, 1998; 65 FR 70220, Nov. 21, 2000; 66 FR 67694, Dec. 31, 2001; 70 FR 48054, Aug. 15, 2005]

§ 393.76 Sleeper berths.

(a) *Dimensions*—(1) *Size.* A sleeper berth must be at least the following size:

Date of installation on motor vehicle	Length measured on centerline of longitudinal axis (inches)	Width measured on centerline of transverse axis (inches)	Height measured from highest point of top of mattress (inches) [1]
Before January 1, 1953	72	18	18
After December 31, 1952, and before October 1, 1975 ...	75	21	21
After September 30, 1975	75	24	24

[1] In the case of a sleeper berth which utilizes an adjustable mechanical suspension system, the required clearance can be measured when the suspension system is adjusted to the height to which it would settle when occupied by a driver.

(2) *Shape.* A sleeper berth installed on a motor vehicle on or after January 1, 1953 must be of generally rectangular shape, except that the horizontal corners and the roof corners may be rounded to radii not exceeding 10½ inches.

(3) *Access.* A sleeper berth must be constructed so that an occupant's ready entrance to, and exit from, the sleeper berth is not unduly hindered.

(b) *Location.* (1) A sleeper berth must not be installed in or on a semitrailer or a full trailer other than a house trailer.

(2) A sleeper berth located within the cargo space of a motor vehicle must be securely compartmentalized from the remainder of the cargo space. A sleeper berth installed on or after January 1, 1953 must be located in the cab or immediately adjacent to the cab and must be securely fixed with relation to the cab.

(c) *Exit from the berth.* (1) Except as provided in paragraph (c)(2) of this section, there must be a direct and ready means of exit from a sleeper berth into the driver's seat or compartment. If the sleeper berth was installed on or after January 1, 1963, the exit must be a doorway or opening at least 18 inches high and 36 inches wide. If the sleeper berth was installed before January 1, 1963, the exit must have sufficient area to contain an ellipse having a major axis of 24 inches and a minor axis of 16 inches.

(2) A sleeper berth installed before January 1, 1953 must either:

(i) Conform to the requirements of paragraph (c)(1) of this section; or

(ii) Have at least two exits, each of which is at least 18 inches high and 21 inches wide, located at opposite ends of the vehicle and useable by the occupant without the assistance of any other person.

(d) *Communication with the driver.* A sleeper berth which is not located within the driver's compartment and has no direct entrance into the driver's compartment must be equipped with a means of communication between the occupant and the driver. The means of communication may consist of a telephone, speaker tube, buzzer, pull cord, or other mechanical or electrical device.

(e) *Equipment.* A sleeper berth must be properly equipped for sleeping. Its equipment must include:

(1) Adequate bedclothing and blankets; and

(2) Either:

(i) Springs and a mattress; or

(ii) An innerspring mattress; or

(iii) A cellular rubber or flexible foam mattress at least four inches thick; or

(iv) A mattress filled with a fluid and of sufficient thickness when filled to prevent ''bottoming-out'' when occupied while the vehicle is in motion.

(f) *Ventilation.* A sleeper berth must have louvers or other means of providing adequate ventilation. A sleeper berth must be reasonably tight against dust and rain.

(g) *Protection against exhaust and fuel leaks and exhaust heat.* A sleeper berth must be located so that leaks in the vehicle's exhaust system or fuel system do not permit fuel, fuel system gases, or exhaust gases to enter the sleeper berth. A sleeper berth must be located so that it will not be overheated or damaged by reason of its proximity to the vehicle's exhaust system.

(h) *Occupant restraint.* A motor vehicle manufactured on or after July 1, 1971, and equipped with a sleeper berth must be equipped with a means of preventing ejection of the occupant of the sleeper berth during deceleration of the vehicle. The restraint system must be designed, installed, and maintained to withstand a minimum total force of 6,000 pounds applied toward the front of the vehicle and parallel to the longitudinal axis of the vehicle.

[39 FR 14711, Apr. 26, 1974; 39 FR 17233, May 14, 1974, as amended at 53 FR 49401, Dec. 7, 1988]

§ 393.77 Heaters.

On every motor vehicle, every heater shall comply with the following requirements:

(a) *Prohibited types of heaters.* The installation or use of the following types of heaters is prohibited:

(1) *Exhaust heaters.* Any type of exhaust heater in which the engine exhaust gases are conducted into or through any space occupied by persons or any heater which conducts engine compartment air into any such space.

(2) *Unenclosed flame heaters.* Any type of heater employing a flame which is not fully enclosed, except that such heaters are not prohibited when used for heating the cargo of tank motor vehicles.

(3) *Heaters permitting fuel leakage.* Any type of heater from the burner of which there could be spillage or leakage of fuel upon the tilting or overturning of the vehicle in which it is mounted.

(4) *Heaters permitting air contamination.* Any heater taking air, heated or to be heated, from the engine compartment or from direct contact with any portion of the exhaust system; or any heater taking air in ducts from the outside atmosphere to be conveyed through the engine compartment, unless said ducts are so constructed and installed as to prevent contamination of the air so conveyed by exhaust or engine compartment gases.

(5) *Solid fuel heaters except wood charcoal.* Any stove or other heater employing solid fuel except wood charcoal.

(6) *Portable heaters.* Portable heaters shall not be used in any space occupied by persons except the cargo space of motor vehicles which are being loaded or unloaded.

(b) *Heater specifications.* All heaters shall comply with the following specifications:

(1) *Heating elements, protection.* Every heater shall be so located or protected as to prevent contact therewith by occupants, unless the surface temperature of the protecting grilles or of any exposed portions of the heaters, inclusive of exhaust stacks, pipes, or conduits shall be lower than would cause contact burns. Adequate protection shall be afforded against igniting parts of the vehicle or burning occupants by direct radiation. Wood charcoal heaters shall be enclosed within a metal barrel, drum, or similar protective enclosure which enclosure shall be provided with a securely fastened cover.

(2) *Moving parts, guards.* Effective guards shall be provided for the protection of passengers or occupants against injury by fans, belts, or any other moving parts.

(3) *Heaters, secured.* Every heater and every heater enclosure shall be securely fastened to the vehicle in a substantial manner so as to provide against relative motion within the vehicle during normal usage or in the event the vehicle overturns. Every heater shall be so designed, constructed, and mounted as to minimize the likelihood of disassembly of any of

its parts, including exhaust stacks, pipes, or conduits, upon overturn of the vehicle in or on which it is mounted. Wood charcoal heaters shall be secured against relative motion within the enclosure required by paragraph (c)(1) of this section, and the enclosure shall be securely fastened to the motor vehicle.

(4) *Relative motion between fuel tank and heater.* When either in normal operation or in the event of overturn, there is or is likely to be relative motion between the fuel tank for a heater and the heater, or between either of such units and the fuel lines between them, a suitable means shall be provided at the point of greatest relative motion so as to allow this motion without causing failure of the fuel lines.

(5) *Operating controls to be protected.* On every bus designed to transport more than 15 passengers, including the driver, means shall be provided to prevent unauthorized persons from tampering with the operating controls. Such means may include remote control by the driver; installation of controls at inaccessible places; control of adjustments by key or keys; enclosure of controls in a locked space, locking of controls, or other means of accomplishing this purpose.

(6) *Heater hoses.* Hoses for all hot water and steam heater systems shall be specifically designed and constructed for that purpose.

(7) *Electrical apparatus.* Every heater employing any electrical apparatus shall be equipped with electrical conductors, switches, connectors, and other electrical parts of ample current-carrying capacity to provide against overheating; any electric motor employed in any heater shall be of adequate size and so located that it will not be overheated; electrical circuits shall be provided with fuses and/or circuit breakers to provide against electrical overloading; and all electrical conductors employed in or leading to any heater shall be secured against dangling, chafing, and rubbing and shall have suitable protection against any other condition likely to produce short or open circuits.

NOTE: Electrical parts certified as proper for use by Underwriters' Laboratories, Inc., shall be deemed to comply with the foregoing requirements.

(8) *Storage battery caps.* If a separate storage battery is located within the personnel or cargo space, such battery shall be securely mounted and equipped with nonspill filler caps.

(9) *Combustion heater exhaust construction.* Every heater employing the combustion of oil, gas, liquefied petroleum gas, or any other combustible material shall be provided with substantial means of conducting the products of combustion to the outside of the vehicle: *Provided, however,* That this requirement shall not apply to heaters used solely to heat the cargo space of motor vehicles where such motor vehicles or heaters are equipped with means specifically designed and maintained so that the carbon monoxide concentration will never exceed 0.2 percent in the cargo space. The exhaust pipe, stack, or conduit if required shall be sufficiently substantial and so secured as to provide reasonable assurance against leakage or discharge of products of combustion within the vehicle and, if necessary, shall be so insulated as to make unlikely the burning or charring of parts of the vehicle by radiation or by direct contact. The place of discharge of the products of combustion to the atmosphere and the means of discharge of such products shall be such as to minimize the likelihood of their reentry into the vehicle under all operating conditions.

(10) *Combustion chamber construction.* The design and construction of any combustion-type heater except cargo space heaters permitted by the proviso of paragraph (c)(9) of this section and unenclosed flame heaters used for heating cargo of tank motor vehicles shall be such as to provide against the leakage of products of combustion into air to be heated and circulated. The material employed in combustion chambers shall be such as to provide against leakage because of corrosion, oxidation, or other deterioration. Joints between combustion chambers and the air chambers with which they are in thermal and mechanical contact shall be so designed and constructed as to prevent leakage between the chambers and the materials employed in such joints shall have melting points substantially higher than the maximum

temperatures likely to be attained at the points of jointure.

(11) *Heater fuel tank location.* Every bus designed to transport more than 15 passengers, including the driver, with heaters of the combustion type shall have fuel tanks therefor located outside of and lower than the passenger space. When necessary, suitable protection shall be afforded by shielding or other means against the puncturing of any such tank or its connections by flying stones or other objects.

(12) *Heater, automatic fuel control.* Gravity or siphon feed shall not be permitted for heaters using liquid fuels. Heaters using liquid fuels shall be equipped with automatic means for shutting off the fuel or for reducing such flow of fuel to the smallest practicable magnitude, in the event of overturn of the vehicle. Heaters using liquefied petroleum gas as fuel shall have the fuel line equipped with automatic means at the source of supply for shutting off the fuel in the event of separation, breakage, or disconnection of any of the fuel lines between the supply source and the heater.

(13) *''Tell-tale'' indicators.* Heaters subject to paragraph (c)(14) of this section and not provided with automatic controls shall be provided with ''telltale'' means to indicate to the driver that the heater is properly functioning. This requirement shall not apply to heaters used solely for the cargo space in semitrailers or full trailers.

(14) *Shut-off control.* Automatic means, or manual means if the control is readily accessible to the driver without moving from the driver's seat, shall be provided to shut off the fuel and electrical supply in case of failure of the heater to function for any reason, or in case the heater should function improperly or overheat. This requirement shall not apply to wood charcoal heaters or to heaters used solely to heat the contents of cargo tank motor vehicles, but wood charcoal heaters must be provided with a controlled method of regulating the flow of combustion air.

(15) *Certification required.* Every combustion-type heater, except wood charcoal heaters, the date of manufacture of which is subsequent to December 31, 1952, and every wood charcoal heater, the date of manufacture of which is subsequent to September 1, 1953, shall be marked plainly to indicate the type of service for which such heater is designed and with a certification by the manufacturer that the heater meets the applicable requirements for such use. For example, ''Meets I.C.C. Bus Heater Requirements,'' Meets I.C.C. Flue-Vented Cargo Space Heater Requirements,'' and after December 31, 1967, such certification shall read ''Meets FMCSA Bus Heater Requirements,'' ''Meets FMCSA Flue-Vented Cargo Space Heater Requirements,'' etc.

(i) *Exception.* The certification for a catalytic heater which is used in transporting flammable liquid or gas shall be as prescribed under §177.834(1) of this title.

[33 FR 19735, Dec. 25, 1968, as amended at 40 FR 51198, Nov. 4, 1975; 53 FR 49401, Dec. 7, 1988]

§ 393.78 Windshield wiping and washing systems.

(a) *Vehicles manufactured on or after December 25, 1968.* Each bus, truck, and truck-tractor manufactured on or after December 25, 1968, must have a windshield wiping system that meets the requirements of FMVSS No. 104 (S4.1) in effect on the date of manufacture. Each of these vehicles must have a windshield washing system that meets the requirements of FMVSS No. 104 (S4.2.2) in effect on the date of manufacture.

(b) *Vehicles manufactured between June 30, 1953, and December 24, 1968.* Each truck, truck-tractor, and bus manufactured between June 30, 1953, and December 24, 1968, shall be equipped with a power-driven windshield wiping system with at least two wiper blades, one on each side of the centerline of the windshield. Motor vehicles which depend upon vacuum to operate the windshield wipers, shall have the wiper system constructed and maintained such that the performance of the wipers will not be adversely affected by a change in the intake manifold pressure.

(c) *Driveaway-towaway operations.* Windshield wiping and washing systems need not be in working condition while a commercial motor vehicle is

being towed in a driveaway-towaway operation.

[70 FR 48054, Aug. 15, 2005]

§ 393.79 Windshield defrosting and defogging systems.

(a) *Vehicles manufactured on or after December 25, 1968.* Each bus, truck, and truck-tractor manufactured on or after December 25, 1968, must have a windshield defrosting and defogging system that meets the requirements of FMVSS No. 103 in effect on the date of manufacture.

(b) *Vehicles manufactured before December 25, 1968.* Each bus, truck, and truck-tractor shall be equipped with a means for preventing the accumulation of ice, snow, frost, or condensation that could obstruct the driver's view through the windshield while the vehicle is being driven.

[70 FR 48054, Aug. 15, 2005]

§ 393.80 Rear-vision mirrors.

(a) Every bus, truck, and truck tractor shall be equipped with two rear-vision mirrors, one at each side, firmly attached to the outside of the motor vehicle, and so located as to reflect to the driver a view of the highway to the rear, along both sides of the vehicle. All such regulated rear-vision mirrors and their replacements shall meet, as a minimum, the requirements of FMVSS No. 111 (49 CFR 571.111) in force at the time the vehicle was manufactured.

(b) *Exceptions.* (1) Mirrors installed on a vehicle manufactured prior to January 1, 1981, may be continued in service, provided that if the mirrors are replaced they shall be replaced with mirrors meeting, as a minimum, the requirements of FMVSS No. 111 (49 CFR 571.111) in force at the time the vehicle was manufactured.

(2) Only one outside mirror shall be required, which shall be on the driver's side, on trucks which are so constructed that the driver has a view to the rear by means of an interior mirror.

(3) In driveway-towaway operations, the driven vehicle shall have at least one mirror furnishing a clear view to the rear.

[48 FR 57139, Dec. 28, 1983]

§ 393.81 Horn.

Every bus, truck, truck-tractor, and every driven motor vehicle in driveaway-towaway operations shall be equipped with a horn and actuating elements which shall be in such condition as to give an adequate and reliable warning signal.

§ 393.82 Speedometer.

Each bus, truck, and truck-tractor must be equipped with a speedometer indicating vehicle speed in miles per hour and/or kilometers per hour. The speedometer must be accurate to within plus or minus 8 km/hr (5 mph) at a speed of 80 km/hr (50 mph).

[70 FR 48054, Aug. 15, 2005]

§ 393.83 Exhaust systems.

(a) Every motor vehicle having a device (other than as part of its cargo) capable of expelling harmful combustion fumes shall have a system to direct the discharge of such fumes. No part shall be located where its location would likely result in burning, charring, or damaging the electrical wiring, the fuel supply, or any combustible part of the motor vehicle.

(b) No exhaust system shall discharge to the atmosphere at a location immediately below the fuel tank or the fuel tank filler pipe.

(c) The exhaust system of a bus powered by a gasoline engine shall discharge to the atmosphere at or within 6 inches forward of the rearmost part of the bus.

(d) The exhaust system of a bus using fuels other than gasoline shall discharge to the atmosphere either:

(1) At or within 15 inches forward of the rearmost part of the vehicle; or

(2) To the rear of all doors or windows designed to be open, except windows designed to be opened solely as emergency exits.

(e) The exhaust system of every truck and truck tractor shall discharge to the atmosphere at a location to the rear of the cab or, if the exhaust projects above the cab, at a location near the rear of the cab.

(f) No part of the exhaust system shall be temporarily repaired with wrap or patches.

(g) No part of the exhaust system shall leak or discharge at a point forward of or directly below the driver/sleeper compartment. The exhaust outlet may discharge above the cab/sleeper roofline.

(h) The exhaust system must be securely fastened to the vehicle.

(i) Exhaust systems may use hangers which permit required movement due to expansion and contraction caused by heat of the exhaust and relative motion between engine and chassis of a vehicle.

[53 FR 49401, Dec. 7, 1988]

§ 393.84 Floors.

The flooring in all motor vehicles shall be substantially constructed, free of unnecessary holes and openings, and shall be maintained so as to minimize the entrance of fumes, exhaust gases, or fire. Floors shall not be permeated with oil or other substances likely to cause injury to persons using the floor as a traction surface.

[53 FR 49401, Dec. 7, 1988]

§ 393.85 [Reserved]

§ 393.86 Rear impact guards and rear end protection.

(a)(1) *General requirements for trailers and semitrailers manufactured on or after January 26, 1998.* Each trailer and semitrailer with a gross vehicle weight rating of 4,536 kg (10,000 pounds) or more, and manufactured on or after January 26, 1998, must be equipped with a rear impact guard that meets the requirements of Federal Motor Vehicle Safety Standard No. 223 (49 CFR 571.223) in effect at the time the vehicle was manufactured. When the rear impact guard is installed on the trailer or semitrailer, the vehicle must, at a minimum, meet the requirements of FMVSS No. 224 (49 CFR 571.224) in effect at the time the vehicle was manufactured. The requirements of paragraph (a) of this section do not apply to pole trailers (as defined in § 390.5 of this chapter); pulpwood trailers, low chassis vehicles, special purpose vehicles, wheels back vehicles (as defined in § 393.5); and trailers towed in driveaway-towaway operations (as defined in § 390.5).

(2) *Impact guard width.* The outermost surfaces of the horizontal member of the guard must extend to within 100 mm (4 inches) of the side extremities of the vehicle. The outermost surface of the horizontal member shall not extend beyond the side extremity of the vehicle.

(3) *Guard height.* The vertical distance between the bottom edge of the horizontal member of the guard and the ground shall not exceed 560 mm (22 inches) at any point across the full width of the member. Guards with rounded corners may curve upward within 255 mm (10 inches) of the longitudinal vertical planes that are tangent to the side extremities of the vehicle.

(4) *Guard rear surface.* At any height 560 mm (22 inches) or more above the ground, the rearmost surface of the horizontal member of the guard must be within 305 mm (12 inches) of the rear extremity of the vehicle. This paragraph shall not be construed to prohibit the rear surface of the guard from extending beyond the rear extremity of the vehicle. Guards with rounded corners may curve forward within 255 mm (10 inches) of the side extremity.

(5) *Cross-sectional vertical height.* The horizontal member of each guard must have a cross sectional vertical height of at least 100 mm (3.94 inches) at any point across the guard width.

(6) *Certification and labeling requirements for rear impact protection guards.* Each rear impact guard used to satisfy the requirements of paragraph (a)(1) of this section must be permanently marked or labeled as required by FMVSS No. 223 (49 CFR 571.223, S5.3). The label must be on the forward-facing surface of the horizontal member of the guard, 305 mm (12 inches) inboard of the right end of the guard. The certification label must contain the following information:

(i) The impact guard manufacturer's name and address;

(ii) The statement ''Manufactured in ____'' (inserting the month and year that the guard was manufactured); and,

(iii) The letters ''DOT'', constituting a certification by the guard manufacturer that the guard conforms to all requirements of FMVSS No. 223.

(b)(1) *Requirements for motor vehicles manufactured after December 31, 1952 (except trailers or semitrailers manufactured on or after January 26, 1998).* Each motor vehicle manufactured after December 31, 1952, (except truck tractors, pole trailers, pulpwood trailers, or vehicles in driveaway-towaway operations) in which the vertical distance between the rear bottom edge of the body (or the chassis assembly if the chassis is the rearmost part of the vehicle) and the ground is greater than 76.2 cm (30 inches) when the motor vehicle is empty, shall be equipped with a rear impact guard(s). The rear impact guard(s) must be installed and maintained in such a manner that:

(i) The vertical distance between the bottom of the guard(s) and the ground does not exceed 76.2 cm (30 inches) when the motor vehicle is empty;

(ii) The maximum lateral distance between the closest points between guards, if more than one is used, does not exceed 61 cm (24 inches);

(iii) The outermost surfaces of the horizontal member of the guard are no more than 45.7 cm (18 inches) from each side extremity of the motor vehicle;

(iv) The impact guard(s) are no more than 61 cm (24 inches) forward of the rear extremity of the motor vehicle.

(2) *Construction and attachment.* The rear impact guard(s) must be substantially constructed and attached by means of bolts, welding, or other comparable means.

(3) *Vehicle components and structures that may be used to satisfy the requirements of paragraph (b) of this section.* Low chassis vehicles, special purpose vehicles, or wheels back vehicles constructed and maintained so that the body, chassis, or other parts of the vehicle provide the rear end protection comparable to impact guard(s) conforming to the requirements of paragraph (b)(1) of this section shall be considered to be in compliance with those requirements.

[64 FR 47708, Sept. 1, 1999, as amended at 67 FR 61824, Oct. 2, 2002]

§ 393.87 Warning flags on projecting loads.

(a) Any commercial motor vehicle transporting a load which extends beyond the sides by more than 102 mm (4 inches) or more than 1,219 mm (4 feet) beyond the rear must have the extremities of the load marked with red or orange fluorescent warning flags. Each warning flag must be at least 457 mm (18 inches) square.

(b) *Position of flags.* There must be a single flag at the extreme rear if the projecting load is two feet wide or less. Two warning flags are required if the projecting load is wider than two feet. Flags must be located to indicate maximum width of loads which extend beyond the sides and/or rear of the vehicle.

[70 FR 48054, Aug. 15, 2005]

§ 393.88 Television receivers.

Any motor vehicle equipped with a television viewer, screen or other means of visually receiving a television broadcast shall have the viewer or screen located in the motor vehicle at a point to the rear of the back of the driver's seat if such viewer or screen is in the same compartment as the driver and the viewer or screen shall be so located as not to be visible to the driver, while he/she is driving the motor vehicle. The operating controls for the television receiver shall be so located that the driver cannot operate them without leaving the driver's seat.

§ 393.89 Buses, driveshaft protection.

Any driveshaft extending lengthways under the floor of the passenger compartment of a bus shall be protected by means of at least one guard or bracket at that end of the shaft which is provided with a sliding connection (spline or other such device) to prevent the whipping of the shaft in the event of failure thereof or of any of its component parts. A shaft contained within a torque tube shall not require any such device.

[33 FR 19735, Dec. 25, 1968, as amended at 53 FR 49402, Dec. 7, 1988]

§ 393.90 Buses, standee line or bar.

Except as provided below, every bus, which is designed and constructed so as to allow standees, shall be plainly marked with a line of contrasting color at least 2 inches wide or equipped with some other means so as to indicate to any person that he/she is prohibited

from occupying a space forward of a perpendicular plane drawn through the rear of the driver's seat and perpendicular to the longitudinal axis of the bus. Every bus shall have clearly posted at or near the front, a sign with letters at least one-half inch high stating that it is a violation of the Federal Motor Carrier Safety Administration's regulations for a bus to be operated with persons occupying the prohibited area. The requirements of this section shall not apply to any bus being transported in driveaway-towaway operation or to any level of the bus other that the level in which the driver is located nor shall they be construed to prohibit any seated person from occupying permanent seats located in the prohibited area provided such seats are so located that persons sitting therein will not interfere with the driver's safe operation of the bus.

§ 393.91 Buses, aisle seats prohibited.

No bus shall be equipped with aisle seats unless such seats are so designed and installed as to automatically fold and leave a clear aisle when they are unoccupied. No bus shall be operated if any seat therein is not securely fastened to the vehicle.

[53 FR 49402, Dec. 7, 1988]

§ 393.92 [Reserved]

§ 393.93 Seats, seat belt assemblies, and seat belt assembly anchorages.

(a) *Buses*—(1) *Buses manufactured on or after January 1, 1965, and before July 1, 1971.* After June 30, 1972, every bus manufactured on or after January 1, 1965, and before July 1, 1971, must be equipped with a Type 1 or Type 2 seat belt assembly that conforms to Federal Motor Vehicle Safety Standard No. 209[1] (§ 571.209) installed at the driver's seat and seat belt assembly anchorages that conform to the location and geometric requirements of Federal Motor Vehicle Safety Standard No. 210[1] (§ 571.210) for that seat belt assembly.

(2) *Buses manufactured on or after July 1, 1971.* Every bus manufactured on or after July 1, 1971, must conform to the requirements of Federal Motor Vehicle Safety Standard No. 208[1] (§ 571.208) (relating to installation of seat belt assemblies) and Federal Motor Vehicle Safety Standard No. 210[1] (§ 571.210) (relating to installation of seat belt assembly anchorages).

(3) *Buses manufactured on or after January 1, 1972.* Every bus manufactured on or after January 1, 1972, must conform to the requirements of Federal Motor Vehicle Safety Standard No. 207[1] (§ 571.207) (relating to seating systems).

(b) *Trucks and truck tractors*—(1) *Trucks and truck tractors manufactured on and after January 1, 1965, and before July 1, 1971.* Except as provided in paragraph (d) of this section, after June 30, 1972, every truck and truck tractor manufactured on or after January 1, 1965, and before July 1, 1971, must be equipped with a Type 1 or Type 2 seat belt assembly that conforms to Federal Motor Vehicle Safety Standard No. 209 (§ 571.209) installed at the driver's seat and at the right front outboard seat, if the vehicle has one, and seat belt assembly anchorages that conform to the location and geometric requirements of Federal Motor Vehicle Safety Standard No. 210 (§ 571.210) for each seat belt assembly that is required by this subparagraph.

(2) *Trucks and truck tractors manufactured on or after July 1, 1971.* Every truck and truck tractor manufactured on or after July 1, 1971, except a truck or truck tractor being transported in driveaway-towaway operation and having an incomplete vehicle seating and cab configuration, must conform to the requirements of Federal Motor Vehicle Safety Standard No. 208[1] (§ 571.208) (relating to installation of seat belt assemblies) and Federal Motor Vehicle Safety Standard No. 210[1] (§ 571.210) (relating to installation of seat belt assembly anchorages).

(3) *Trucks and truck tractors manufactured on or after January 1, 1972.* Every truck and truck tractor manufactured on or after January 1, 1972, except a

[1] Individual copies of Federal Motor Vehicle Safety Standards may be obtained from the National Highway Traffic Safety Administration. Nassif Building, 400 Seventh Street SW., Washington, D.C. 20590.

[1] See footnote to § 393.93(a).

truck or truck tractor being transported in driveaway-towaway operation and having an incomplete vehicle seating and cab configuration, must conform to the requirements of Federal Motor Vehicle Safety Standard No. 207[1] (§ 571.207) (relating to seating systems).

(c) *Effective date of standards.* Whenever paragraph (a) or (b) of this section requires conformity to a Federal Motor Vehicle Safety Standard, the vehicle or equipment must conform to the version of the Standard that is in effect on the date the vehicle is manufactured or on the date the vehicle is modified to conform to the requirements of paragraph (a) or (b) of this section, whichever is later.

(d) Trucks and truck tractors manufactured on or after January 1, 1965, and before July 1, 1971, and operated in the State of Hawaii, must comply with the provisions of paragraph (b) of this section on and after January 1, 1976.

[35 FR 16839, Oct. 30, 1970, as amended at 39 FR 32561, Sept. 9, 1974; 40 FR 32336, Aug. 1, 1975]

§ 393.94 Interior noise levels in power units.

(a) *Applicability of this section.* The interior noise level requirements apply to all trucks, truck-tractors, and buses.

(b) *General rule.* The interior sound level at the driver's seating position of a motor vehicle must not exceed 90 dB(A) when measured in accordance with paragraph (c) of this section.

(c) *Test procedure.* (1) Park the vehicle at a location so that no large reflecting surfaces, such as other vehicles, signboards, buildings, or hills, are within 50 feet of the driver's seating position.

(2) Close all vehicle doors, windows, and vents. Turn off all power-operated accessories.

(3) Place the driver in his/her normal seated position at the vehicle's controls. Evacuate all occupants except the driver and the person conducting the test.

(4) The sound level meters used to determine compliance with the requirements of this section must meet the American National Standards Institute ''*Specification for Sound Level Meters,*'' ANSI S1.4—1983. (See § 393.7(b) for information on the incorporation by reference and availability of this document.)

(5) Locate the microphone, oriented vertically upward, 6 inches to the right of, in the same plane as, and directly in line with, the driver's right ear.

(6) With the vehicle's transmission in neutral gear, accelerate its engine to either its maximum governed engine speed, if it is equipped with an engine governor, or its speed at its maximum rated horsepower, if it is not equipped with an engine governor. Stabilize the engine at that speed.

(7) Observe the A-weighted sound level reading on the meter for the stabilized engine speed condition. Record that reading, if the reading has not been influenced by extraneous noise sources such as motor vehicles operating on adjacent roadways.

(8) Return the vehicle's engine speed to idle and repeat the procedures specified in paragraphs (c) (6) and (7) of this section until two maximum sound levels within 2 dB of each other are recorded. Numerically average those two maximum sound level readings.

(9) The average obtained in accordance with paragraph (c)(8) of this section is the vehicle's interior sound level at the driver's seating position for the purpose of determining whether the vehicle conforms to the rule in paragraph (b) of this section. However, a 2 dB tolerance over the sound level limitation specified in that paragraph is permitted to allow for variations in test conditions and variations in the capabilities of meters.

(10) If the motor vehicle's engine radiator fan drive is equipped with a clutch or similar device that automatically either reduces the rotational speed of the fan or completely disengages the fan from its power source in response to reduced engine cooling loads the vehicle may be parked before testing with its engine running at high idle or any other speed the operator may choose, for sufficient time but not more than 10 minutes, to permit the engine radiator fan to automatically disengage.

[38 FR 30881, Nov. 8, 1973, as amended at 40 FR 32336, Aug. 1, 1975; 41 FR 28268, July 9, 1976; 70 FR 48054, Aug. 15, 2005]

Subpart H—Emergency Equipment

§ 393.95 Emergency equipment on all power units.

Each truck, truck tractor, and bus (except those towed in driveaway-towaway operations) must be equipped as follows:

(a) *Fire Extinguishers.* (1) *Minimum ratings:* (i) A power unit that is used to transport hazardous materials in a quantity that requires placarding (See § 177.823 of this title) must be equipped with a fire extinguisher having an Underwriters' Laboratories rating of 10 B:C or more.

(ii) A power unit that is not used to transport hazardous materials must be equipped with either:

(A) A fire extinguisher having an Underwriters' Laboratories rating of 5 B:C or more; or

(B) Two fire extinguishers, each of which has an Underwriters' Laboratories rating of 4 B:C or more.

(2) *Labeling and marking.* Each fire extinguisher required by this section must be labeled or marked by the manufacturer with its Underwriters' Laboratories rating.

(3) *Visual Indicators.* The fire extinguisher must be designed, constructed, and maintained to permit visual determination of whether it is fully charged.

(4) *Condition, location, and mounting.* The fire extinguisher(s) must be filled and located so that it is readily accessible for use. The extinguisher(s) must be securely mounted to prevent sliding, rolling, or vertical movement relative to the motor vehicle.

(5) *Extinguishing agents.* The fire extinguisher must use an extinguishing agent that does not need protection from freezing. Extinguishing agents must comply with the toxicity provisions of the Environmental Protection Agency's Significant New Alternatives Policy (SNAP) regulations under 40 CFR Part 82, Subpart G.

(b) *Spare fuses.* Power units for which fuses are needed to operate any required parts and accessories must have at least one spare fuse for each type/size of fuse needed for those parts and accessories.

(c)–(e) [Reserved]

(f) *Warning devices for stopped vehicles.* Except as provided in paragraph (g) of this section, one of the following options must be used:

(1) Three bidirectional emergency reflective triangles that conform to the requirements of Federal Motor Vehicle Safety Standard No. 125, § 571.125 of this title; or

(2) At least 6 fusees or 3 liquid-burning flares. The vehicle must have as many additional fusees or liquid-burning flares as are necessary to satisfy the requirements of § 392.22.

(3) Other warning devices may be used in addition to, but not in lieu of, the required warning devices, provided those warning devices do not decrease the effectiveness of the required warning devices.

(g) *Restrictions on the use of flame-producing devices.* Liquid-burning flares, fusees, oil lanterns, or any signal produced by a flame shall not be carried on any commercial motor vehicle transporting Division 1.1, 1.2, 1.3 (explosives) hazardous materials; any cargo tank motor vehicle used for the transportation of Division 2.1 (flammable gas) or Class 3 (flammable liquid) hazardous materials whether loaded or empty; or any commercial motor vehicle using compressed gas as a motor fuel.

(h)—(i) [Reserved]

(j) *Requirements for fusees and liquid-burning flares.* Each fusee shall be capable of burning for 30 minutes, and each liquid-burning flare shall contain enough fuel to burn continuously for at least 60 minutes. Fusees and liquid-burning flares shall conform to the requirements of Underwriters Laboratories, Inc., UL No. 912, Highway Emergency Signals, Fourth Edition, July 30, 1979, (with an amendment dated November 9, 1981). (See § 393.7(c) for information on the incorporation by reference and availability of this document.) Each fusee and liquid-burning flare shall be marked with the UL symbol in accordance with the requirements of UL 912.

(k) *Requirements for red flags.* Red flags shall be not less than 12 inches square, with standards adequate to

maintain the flags in an upright position.

(49 U.S.C. 304, 1655; 49 CFR 1.48(b) and 301.60)

[33 FR 19735, Dec. 25, 1968, as amended at 35 FR 13019, Aug. 15, 1970; 35 FR 14619, Sept. 18, 1970; 37 FR 17176, Aug. 25, 1972; 40 FR 10685, Mar. 7, 1975; 41 FR 53031, Dec. 3, 1976; 47 FR 47837, Oct. 28, 1982; 59 FR 34712, July 6, 1994; 67 FR 61225, Sept. 27, 2002; 70 FR 48054, Aug. 15, 2005]

Subpart I—Protection Against Shifting and Falling Cargo

SOURCE: 67 FR 61225, Sept. 27, 2002, unless otherwise noted.

§ 393.100 Which types of commercial motor vehicles are subject to the cargo securement standards of this subpart, and what general requirements apply?

(a) *Applicability*. The rules in this subpart are applicable to trucks, truck tractors, semitrailers, full trailers, and pole trailers.

(b) *Prevention against loss of load*. Each commercial motor vehicle must, when transporting cargo on public roads, be loaded and equipped, and the cargo secured, in accordance with this subpart to prevent the cargo from leaking, spilling, blowing or falling from the motor vehicle.

(c) *Prevention against shifting of load*. Cargo must be contained, immobilized or secured in accordance with this subpart to prevent shifting upon or within the vehicle to such an extent that the vehicle's stability or maneuverability is adversely affected.

§ 393.102 What are the minimum performance criteria for cargo securement devices and systems?

(a) *Performance criteria*. Cargo securement devices and systems must be capable of withstanding the following three forces, applied separately:

(1) 0.8 g deceleration in the forward direction;

(2) 0.5 g acceleration in the rearward direction; and

(3) 0.5 g acceleration in a lateral direction.

(b) *Performance criteria for devices to prevent vertical movement of loads that are not contained within the structure of the vehicle*. Securement systems must provide a downward force equivalent to at least 20 percent of the weight of the article of cargo if the article is not fully contained within the structure of the vehicle. If the article is fully contained within the structure of the vehicle, it may be secured in accordance with § 393.106(b).

(c) *Prohibition on exceeding working load limits*. Cargo securement devices and systems must be designed, installed, and maintained to ensure that the maximum forces acting on the devices or systems do not exceed the working load limit for the devices under the conditions listed in paragraphs (a) and (b) of this section.

(d) *Equivalent means of securement*. Cargo that is immobilized, or secured in accordance with the applicable requirements of §§ 393.104 through 393.136, is considered as meeting the performance criteria of this section.

§ 393.104 What standards must cargo securement devices and systems meet in order to satisfy the requirements of this subpart?

(a) *General*. All devices and systems used to secure cargo to or within a vehicle must be capable of meeting the requirements of § 393.102.

(b) *Prohibition on the use of damaged securement devices*. All vehicle structures, systems, parts, and components used to secure cargo must be in proper working order when used to perform that function with no damaged or weakened components that will adversely effect their performance for cargo securement purposes, including reducing the working load limit, and must not have any cracks or cuts.

(c) *Vehicle structures and anchor points*. Vehicle structures, floors, walls, decks, tiedown anchor points, headerboards, bulkheads, stakes, posts and associated mounting pockets used to contain or secure articles of cargo must be strong enough to meet the performance criteria of § 393.102, with no damaged or weakened components that will adversely effect their performance for cargo securement purposes, including reducing the working load limit, and must not have any cracks or cuts.

(d) *Material for dunnage, chocks, cradles, shoring bars, blocking and bracing*. Material used as dunnage or dunnage

bags, chocks, cradles, shoring bars, or used for blocking and bracing, must not have damage or defects which would compromise the effectiveness of the securement system.

(e) *Manufacturing standards for tiedown assemblies.* Tiedown assemblies (including chains, wire rope, steel strapping, synthetic webbing, and cordage) and other attachment or fastening devices used to secure articles of cargo to, or in, commercial motor vehicles must conform to the following applicable standards:

An assembly component of . . .	Must conform to . . .
(1) Steel strapping [1, 2]	Standard Specification for Strapping, Flat Steel and Seals, American Society for Testing and Materials (ASTM) D3953–97, February 1998.[4]
(2) Chain	National Association of Chain Manufacturers' Welded Steel Chain Specifications, November 15, 1999.[4]
(3) Webbing	Web Sling and Tiedown Association's Recommended Standard Specification for Synthetic Web Tiedowns, WSTDA-T1, 1998.[4]
(4) Wire rope [3]	Wire Rope Technical Board's Wire Rope Users Manual, 2nd Edition, November 1985.[4]
(5) Cordage	Cordage Institute rope standard: (i) PETRS–2, Polyester Fiber Rope, three-Strand and eight-Strand Constructions, January 1993;[4] (ii) PPRS–2, Polypropylene Fiber Rope, three-Strand and eight-Strand Constructions, August 1992;[4] (iii) CRS–1, Polyester/Polypropylene Composite Rope Specifications, three-Strand and eight-Strand Standard Construction, May 1979;[4] (iv) NRS–1, Nylon Rope Specifications, three-Strand and eight-Strand Standard Construction, May 1979;[4] and (v) C–1, Double Braided Nylon Rope Specifications DBN, January 1984.[4]

[1] Steel strapping not marked by the manufacturer with a working load limit will be considered to have a working load limit equal to one-fourth of the breaking strength listed in ASTM D3953–97.

[2] Steel strapping 25.4 mm (1 inch) or wider must have at least two pairs of crimps in each seal and, when an end-over-end lap joint is formed, must be sealed with at least two seals.

[3] Wire rope which is not marked by the manufacturer with a working load limit shall be considered to have a working load limit equal to one-fourth of the nominal strength listed in the manual.

[4] See § 393.7 for information on the incorporation by reference and availability of this document.

(f) *Use of tiedowns*. (1) Tiedowns and securing devices must not contain knots.

(2) If a tiedown is repaired, it must be repaired in accordance with the applicable standards in paragraph (e) of this section, or the manufacturer's instructions.

(3) Each tiedown must be attached and secured in a manner that prevents it from becoming loose, unfastening, opening or releasing while the vehicle is in transit.

(4) All tiedowns and other components of a cargo securement system used to secure loads on a trailer equipped with rub rails, must be located inboard of the rub rails whenever practicable.

(5) Edge protection must be used whenever a tiedown would be subject to abrasion or cutting at the point where it touches an article of cargo. The edge protection must resist abrasion, cutting and crushing.

§ 393.106 What are the general requirements for securing articles of cargo?

(a) *Applicability*. The rules in this section are applicable to the transportation of all types of articles of cargo, except commodities in bulk that lack structure or fixed shape (*e.g.*, liquids, gases, grain, liquid concrete, sand, gravel, aggregates) and are transported in a tank, hopper, box or similar device that forms part of the structure of a commercial motor vehicle. The rules in this section apply to the cargo types covered by the commodity-specific rules of § 393.116 through § 393.136. The commodity-specific rules take precedence over the general requirements of this section when additional requirements are given for a commodity listed in those sections.

(b) *General*. Cargo must be firmly immobilized or secured on or within a vehicle by structures of adequate strength, dunnage or dunnage bags, shoring bars, tiedowns or a combination of these.

(c) *Cargo placement and restraint*. (1) Articles of cargo that are likely to roll must be restrained by chocks, wedges, a cradle or other equivalent means to prevent rolling. The means of preventing rolling must not be capable of becoming unintentionally unfastened or loose while the vehicle is in transit.

(2) Articles or cargo placed beside each other and secured by transverse tiedowns must either:

(i) Be placed in direct contact with each other, or

(ii) Be prevented from shifting towards each other while in transit.

(d) *Minimum strength of cargo securement devices and systems*. The aggregate working load limit of any securement system used to secure an article or group of articles against movement must be at least one-half times the weight of the article or group of articles. The aggregate working load limit is the sum of:

(1) One-half of the working load limit of each associated connector or attachment mechanism used to secure a part of the article of cargo to the vehicle; and

(2) One-half of the working load limit for each end section of a tiedown that is attached to an anchor point.

[67 FR 61225, Sept. 27, 2002, as amended at 68 FR 56208, Sept. 30, 2003]

§ 393.108 How is the working load limit of a tiedown determined?

(a) The working load limit (WLL) of a tiedown, associated connector or attachment mechanism is the lowest working load limit of any of its components (including tensioner), or the working load limit of the anchor points to which it is attached, whichever is less.

(b) The working load limits of tiedowns may be determined by using either the tiedown manufacturer's markings or by using the tables in this section. The working load limits listed in the tables are to be used when the tiedown material is not marked by the manufacturer with the working load limit. Tiedown materials which are marked by the manufacturer with working load limits that differ from the tables, shall be considered to have a working load limit equal to the value for which they are marked.

(c) Synthetic cordage (*e.g.*, nylon, polypropylene, polyester) which is not marked or labeled to enable identification of its composition or working load limit shall be considered to have a

working load limit equal to that for polypropylene fiber rope.

(d) Welded steel chain which is not marked or labeled to enable identification of its grade or working load limit shall be considered to have a working load limit equal to that for grade 30 proof coil chain.

(e)(1) Wire rope which is not marked by the manufacturer with a working load limit shall be considered to have a working load limit equal to one-fourth of the nominal strength listed in the Wire Rope Users Manual.

(2) Wire which is not marked or labeled to enable identification of its construction type shall be considered to have a working load limit equal to that for 6 × 37, fiber core wire rope.

(f) Manila rope which is not marked by the manufacturer with a working load limit shall be considered to have a working load limit based on its diameter as provided in the tables of working load limits.

(g) Friction mats which are not marked or rated by the manufacturer shall be considered to provide resistance to horizontal movement equal to 50 percent of the weight placed on the mat.

TABLES TO § 393.108

[Working Load Limits (WLL), Chain]

Size mm (inches)	WLL in kg (pounds)				
	Grade 30 proof coil	Grade 43 high test	Grade 70 transport	Grade 80 alloy	Grade 100 alloy
1. 7 (1/4)	580 (1,300)	1,180 (2,600)	1,430 (3,150)	1,570 (3,500)	1,950 (4,300)
2. 8 (5/16)	860 (1,900)	1,770 (3,900)	2,130 (4,700)	2,000 (4,500)	2,600 (5,700)
3. 10 (3/8)	1,200 (2,650)	2,450 (5,400)	2,990 (6,600)	3,200 (7,100)	4,000 (8,800)
4. 11 (7/16)	1,680 (3,700)	3,270 (7,200)	3,970 (8,750)		
5. 13 (1/2)	2,030 (4,500)	4,170 (9,200)	5,130 (11,300)	5,400 (12,000)	6,800 (15,000)
6. 16 (5/8)	3,130 (6,900)	5,910 (13,000)	7,170 (15,800)	8,200 (18,100)	10,300 (22,600)
Chain Mark Examples:					
Example 1	3	4	7	8	10
Example 2	30	43	70	80	100
Example 3	300	430	700	800	1000

SYNTHETIC WEBBING

Width mm (inches)	WLL kg (pounds)
45 (1¾)	790 (1,750)
50 (2)	910 (2,000)
75 (3)	1,360 (3,000)
100 (4)	1,810 (4,000)

WIRE ROPE (6 × 37, FIBER CORE)

Diameter mm (inches)	WLL kg (pounds)
7 (1/4)	640 (1,400)
8 (5/16)	950 (2,100)
10 (3/8)	1,360 (3,000)
11 (7/16)	1,860 (4,100)
13 (1/2)	2,400 (5,300)
16 (5/8)	3,770 (8,300)
20 (3/4)	4,940 (10,900)
22 (7/8)	7,300 (16,100)
25 (1)	9,480 (20,900)

MANILA ROPE

Diameter mm (inches)	WLL kg (pounds)
10 (3/8)	90 (205)
11 (7/16)	120 (265)
13 (1/2)	150 (315)
16 (5/8)	210 (465)
20 (3/4)	290 (640)
25 (1)	480 (1,050)

POLYPROPYLENE FIBER ROPE WLL (3-STRAND AND 8-STRAND CONSTRUCTIONS)

Diameter mm (inches)	WLL kg (pounds)
10 (3/8)	180 (400)
11 (7/16)	240 (525)
13 (1/2)	280 (625)
16 (5/8)	420 (925)
20 (3/4)	580 (1,275)
25 (1)	950 (2,100)

POLYESTER FIBER ROPE WLL (3-STRAND AND 8-STRAND CONSTRUCTIONS)

Diameter mm (inches)	WLL kg (pounds)
10 (3/8)	250 (555)
11 (7/16)	340 (750)
13 (1/2)	440 (960)
16 (5/8)	680 (1,500)
20 (3/4)	850 (1,880)
25 (1)	1,500 (3,300)

NYLON ROPE

Diameter mm (inches)	WLL kg (pounds)
10 (3/8)	130 (278)
11 (7/16)	190 (410)
13 (1/2)	240 (525)
16 (5/8)	420 (935)
20 (3/4)	640 (1,420)

NYLON ROPE—Continued

Diameter mm (inches)	WLL kg (pounds)
25 (1)	1,140 (2,520)

DOUBLE BRAIDED NYLON ROPE

Diameter mm (inches)	WLL kg (pounds)
10 (3/8)	150 (336)
11 (7/16)	230 (502)
13 (1/2)	300 (655)
16 (5/8)	510 (1,130)
20 (3/4)	830 (1,840)
25 (1)	1,470 (3,250)

STEEL STRAPPING

Width × thickness mm (inches)	WLL kg (pounds)
31.7 × .74 (1 1/4 × 0.029)	540 (1,190)
31.7 × .79 (1¼ × 0.031)	540 (1,190)
31.7 × .89 (1¼ × 0.035)	540 (1,190)
31.7 × 1.12 (1¼ × 0.044)	770 (1,690)
31.7 × 1.27 (1¼ × 0.05)	770 (1,690)
31.7 × 1.5 (1¼ × 0.057)	870 (1,925)
50.8 × 1.12 (2 × 0.044)	1,200 (2,650)
50.8 × 1.27 (2 × 0.05)	1,200 (2,650)

§ 393.110 What else do I have to do to determine the minimum number of tiedowns?

(a) In addition to the requirements of § 393.106, the minimum number of tiedowns required to secure an article or group of articles against movement depends on the length of the article(s) being secured, and the requirements of paragraphs (b) and (c) of this section.

(b) When an article is not blocked or positioned to prevent movement in the forward direction by a headerboard, bulkhead, other cargo that is positioned to prevent movement, or other appropriate blocking devices, it must be secured by at least:

(1) One tiedown for articles 5 feet (1.52 meters) or less in length, and 1,100 pounds (500 kg) or less in weight;

(2) Two tiedowns if the article is:

(i) 5 feet (1.52 meters) or less in length and more than 1,100 pounds (500 kg) in weight; or

(ii) Longer than 5 feet (1.52 meters) but less than or equal to 10 feet (3.04 meters) in length, irrespective of the weight.

(3) Two tiedowns if the article is longer than 10 feet (3.04 meters), and one additional tiedown for every 10 feet (3.04 meters) of article length, or fraction thereof, beyond the first 10 feet (3.04 meters) of length.

(c) If an individual article is required to be blocked, braced or immobilized to prevent movement in the forward direction by a headerboard, bulkhead, other articles which are adequately secured or by an appropriate blocking or immobilization method, it must be secured by at least one tiedown for every 3.04 meters (10 feet) or article length, or fraction thereof.

(d) *Special rule for special purpose vehicles.* The rules in this section do not apply to a vehicle transporting one or more articles of cargo such as, but not limited to, machinery or fabricated structural items (e.g., steel or concrete beams, crane booms, girders, and trusses, etc.) which, because of their design, size, shape, or weight, must be fastened by special methods. However, any article of cargo carried on that vehicle must be securely and adequately fastened to the vehicle.

§ 393.112 Must a tiedown be adjustable?

Each tiedown, or its associated connectors, or its attachment mechanisms must be designed, constructed, and maintained so the driver of an in-transit commercial motor vehicle can tighten them. However, this requirement does not apply to the use of steel strapping.

§ 393.114 What are the requirements for front end structures used as part of a cargo securement system?

(a) *Applicability.* The rules in this section are applicable to commercial motor vehicles transporting articles of cargo that are in contact with the front end structure of the vehicle. The front end structure on these cargo-carrying vehicles must meet the performance requirements of this section.

(b) *Height and width.* (1) The front end structure must extend either to a height of 4 feet above the floor of the vehicle or to a height at which it blocks forward movement of any item of article of cargo being carried on the vehicle, whichever is lower.

(2) The front end structure must have a width which is at least equal to the width of the vehicle or which blocks forward movement of any article of cargo being transported on the vehicle, whichever is narrower.

(c) *Strength*. The front end structure must be capable of withstanding the following horizontal forward static load:

(1) For a front end structure less than 6 feet in height, a horizontal forward static load equal to one-half (0.5) of the weight of the articles of cargo being transported on the vehicle uniformly distributed over the entire portion of the front end structure that is within 4 feet above the vehicle's floor or that is at or below a height above the vehicle's floor at which it blocks forward movement of any article of the vehicle's cargo, whichever is less; or

(2) For a front end structure 6 feet in height or higher, a horizontal forward static load equal to four-tenths (0.4) of the weight of the articles of cargo being transported on the vehicle uniformly distributed over the entire front end structure.

(d) *Penetration resistance*. The front end structure must be designed, constructed, and maintained so that it is capable of resisting penetration by any article of cargo that contacts it when the vehicle decelerates at a rate of 20 feet per second, per second. The front end structure must have no aperture large enough to permit any article of cargo in contact with the structure to pass through it.

(e) *Substitute devices*. The requirements of this section may be met by the use of devices performing the same functions as a front end structure, if the devices are at least as strong as, and provide protection against shifting articles of cargo at least equal to, a front end structure which conforms to those requirements.

SPECIFIC SECUREMENT REQUIREMENTS BY COMMODITY TYPE

§ 393.116 What are the rules for securing logs?

(a) *Applicability*. The rules in this section are applicable to the transportation of logs with the following exceptions:

(1) Logs that are unitized by banding or other comparable means may be transported in accordance with the general cargo securement rules of §§ 393.100 through 393.114.

(2) Loads that consist of no more than four processed logs may be transported in accordance with the general cargo securement rules of §§ 393.100 through 393.114.

(3) Firewood, stumps, log debris and other such short logs must be transported in a vehicle or container enclosed on both sides, front, and rear and of adequate strength to contain them. Longer logs may also be so loaded.

(b) *Components of a securement system*. (1) Logs must be transported on a vehicle designed and built, or adapted, for the transportation of logs. Any such vehicle must be fitted with bunks, bolsters, stakes or standards, or other equivalent means, that cradle the logs and prevent them from rolling.

(2) All vehicle components involved in securement of logs must be designed and built to withstand all anticipated operational forces without failure, accidental release or permanent deformation. Stakes or standards that are not permanently attached to the vehicle must be secured in a manner that prevents unintentional separation from the vehicle in transit.

(3) Tiedowns must be used in combination with the stabilization provided by bunks, stakes and bolsters to secure the load.

(c) *Use of securement system*. (1) Logs must be solidly packed, and the outer bottom logs must be in contact with and resting solidly against the bunks, bolsters, stakes or standards.

(2) Each outside log on the side of a stack of logs must touch at least two stakes, bunks, bolsters, or standards. If one end does not actually touch a stake, it must rest on other logs in a stable manner and must extend beyond the stake, bunk, bolster or standard.

(3) The center of the highest outside log on each side or end must be below the top of each stake, bunk or standard.

(4) Each log that is not held in place by contact with other logs or the stakes, bunks, or standards must be held in place by a tiedown. Additional tiedowns or securement devices must be used when the condition of the wood results in such low friction between logs that they are likely to slip upon each other.

(d) *Securement of shortwood logs loaded crosswise on frame, rail and flatbed vehicles.* In addition to the requirements of paragraphs (b) and (c) of this section, each stack of logs loaded crosswise must meet the following rules:

(1) In no case may the end of a log in the lower tier extend more than one-third of the log's total length beyond the nearest supporting structure on the vehicle.

(2) When only one stack of shortwood is loaded crosswise, it must be secured with at least two tiedowns. The tiedowns must attach to the vehicle frame at the front and rear of the load, and must cross the load in this direction.

(3) When two tiedowns are used, they must be positioned at approximately one-third and two-thirds of the length of the logs.

(4) A vehicle that is more than 10 meters (33 feet) long must be equipped with center stakes, or comparable devices, to divide it into sections approximately equal in length. Where a vehicle is so divided, each tiedown must secure the highest log on each side of the center stake, and must be fastened below these logs. It may be fixed at each end and tensioned from the middle, or fixed in the middle and tensioned from each end, or it may pass through a pulley or equivalent device in the middle and be tensioned from one end.

(5) Any structure or stake that is subjected to an upward force when the tiedowns are tensioned must be anchored to resist that force.

(6) If two stacks of shortwood are loaded side-by-side, in addition to meeting the requirements of paragraphs (d)(1) through (d)(5) of this section, they must be loaded so that:

(i) There is no space between the two stacks of logs;

(ii) The outside of each stack is raised at least 2.5 cm (1 in) within 10 cm (4 in) of the end of the logs or the side of the vehicle;

(iii) The highest log is no more than 2.44 m (8 ft) above the deck; and

(iv) At least one tiedown is used lengthwise across each stack of logs.

(e) *Securement of logs loaded lengthwise on flatbed and frame vehicles.* In addition to meeting the requirements of paragraphs (b) and (c) of this section, each stack of shortwood loaded lengthwise on a frame vehicle or on a flatbed must be secured to the vehicle by at least two tiedowns.

(f) *Securement of logs transported on pole trailers.* (1) The load must be secured by at least one tiedown at each bunk, or alternatively, by at least two tiedowns used as wrappers that encircle the entire load at locations along the load that provide effective securement.

(2) The front and rear wrappers must be at least 3.04 meters (10 feet) apart.

(3) Large diameter single and double log loads must be immobilized with chock blocks or other equivalent means to prevent shifting.

(4) Large diameter logs that rise above bunks must be secured to the underlying load with at least two additional wrappers.

§ 393.118 What are the rules for securing dressed lumber or similar building products?

(a) *Applicability.* The rules in this section apply to the transportation of bundles of dressed lumber, packaged lumber, building products such as plywood, gypsum board or other materials of similar shape. Lumber or building products which are not bundled or packaged must be treated as loose items and transported in accordance with §§ 393.100 through 393.114 of this subpart. For the purpose of this section, ''bundle'' refers to packages of lumber, building materials or similar products which are unitized for securement as a single article of cargo.

(b) *Positioning of bundles.* Bundles must be placed side by side in direct contact with each other, or a means must be provided to prevent bundles from shifting towards each other.

(c) *Securement of bundles transported using no more than one tier.* Bundles carried on one tier must be secured in accordance with the general provisions of §§ 393.100 through 393.114.

(d) *Securement of bundles transported using more than one tier.* Bundles carried in more than one tier must be either:

(1) Blocked against lateral movement by stakes on the sides of the vehicle and secured by tiedowns laid out over

the top tier, as outlined in the general provisions of §§ 393.100 through 393.114; or

(2) Restrained from lateral movement by blocking or high friction devices between tiers and secured by tiedowns laid out over the top tier, as outlined in the general provisions of §§ 393.100 through 393.114; or

(3) Placed directly on top of other bundles or on spacers and secured in accordance with the following:

(i) The length of spacers between bundles must provide support to all pieces in the bottom row of the bundle.

(ii) The width of individual spacers must be equal to or greater than the height.

(iii) If spacers are comprised of layers of material, the layers must be unitized or fastened together in a manner which ensures that the spacer performs as a single piece of material.

(iv) The arrangement of the tiedowns for the bundles must be:

(A) Secured by tiedowns over the top tier of bundles, in accordance with the general provisions of §§ 393.100 through 393.114 with a minimum of two tiedowns for bundles longer than 1.52 meters (5 ft); and

(B) Secured by tiedowns in accordance with the general provisions of §§ 393.100 through 393.114 over the second tier or over a middle tier of a maximum height of 1.85 meters (6 ft) above the trailer deck, whichever is greater, for each stack of bundles composed of more than two tiers; or

(4) Secured by tiedowns over each tier of bundles, in accordance with §§ 393.100 through 393.114 using a minimum of two tiedowns over each of the top bundles longer than 1.52 meters (5 ft), in all circumstances.

§ 393.120 What are the rules for securing metal coils?

(a) *Applicability*. The rules in this section apply to the transportation of one or more metal coils which, individually or grouped together, weigh 2268 kg (5000 pounds) or more. Shipments of metal coils that weigh less than 2268 kg (5000 pounds) may be secured in accordance with the provisions of §§ 393.100 through 393.114.

(b) *Securement of coils transported with eyes vertical on a flatbed vehicle, in a sided vehicle or intermodal container with anchor points*—(1) *An individual coil*. Each coil must be secured by tiedowns arranged in a manner to prevent the coils from tipping in the forward, rearward, and lateral directions. The restraint system must include the following:

(i) At least one tiedown attached diagonally from the left side of the vehicle or intermodal container (near the forwardmost part of the coil), across the eye of the coil, to the right side of the vehicle or intermodal container (near the rearmost part of the coil);

(ii) At least one tiedown attached diagonally from the right side of the vehicle or intermodal container (near the forwardmost part of the coil), across the eye of the coil, to the left side of the vehicle or intermodal container (near the rearmost part of the coil);

(iii) At least one tiedown attached transversely over the eye of the coil; and

(iv) Either blocking and bracing, friction mats or tiedowns must be used to prevent longitudinal movement in the forward direction.

(2) *Coils grouped in rows*. When coils are grouped and loaded side by side in a transverse or longitudinal row, the each row of coils must be secured by the following:

(i) At least one tiedown attached to the front of the row of coils, restraining against forward motion, and whenever practicable, making an angle no more than 45 degrees with the floor of the vehicle or intermodal container when viewed from the side of the vehicle or container;

(ii) At least one tiedown attached to the rear of the row of coils, restraining against rearward motion, and whenever practicable, making an angle no more than 45 degrees with the floor of the vehicle or intermodal container when viewed from the side of the vehicle or container;

(iii) At least one tiedown over the top of each coil or transverse row of coils, restraining against vertical motion. Tiedowns going over the top of a coil(s) must be as close as practicable to the eye of the coil and positioned to prevent the tiedown from slipping or becoming unintentionally unfastened while the vehicle is in transit; and

(iv) Tiedowns must be arranged to prevent shifting or tipping in the forward, rearward and lateral directions.

(c) *Securement of coils transported with eyes crosswise on a flatbed vehicle, in a sided vehicle or intermodal container with anchor points*—(1) *An individual coil.* Each coil must be secured by the following:

(i) A means (*e.g.*, timbers, chocks or wedges, a cradle, etc.) to prevent the coil from rolling. The means of preventing rolling must support the coil off the deck, and must not be capable of becoming unintentionally unfastened or loose while the vehicle is in transit. If timbers, chocks or wedges are used, they must be held in place by coil bunks or similar devices to prevent them from coming loose. The use of nailed blocking or cleats as the sole means to secure timbers, chocks or wedges, or a nailed wood cradle, is prohibited;

(ii) At least one tiedown through its eye, restricting against forward motion, and whenever practicable, making an angle no more than 45 degrees with the floor of the vehicle or intermodal container when viewed from the side of the vehicle or container; and

(iii) At least one tiedown through its eye, restricting against rearward motion, and whenever practicable, making an angle no more than 45 degrees with the floor of the vehicle or intermodal container when viewed from the side of the vehicle or container.

(2) *Prohibition on crossing of tiedowns when coils are transported with eyes crosswise.* Attaching tiedowns diagonally through the eye of a coil to form an X-pattern when viewed from above the vehicle is prohibited.

(d) *Securement of coils transported with eyes lengthwise on a flatbed vehicle, in a sided vehicle or intermodal container with anchor points*—(1) *An individual coil-option 1.* Each coil must be secured by:

(i) A means (*e.g.*, timbers, chocks or wedges, a cradle, etc.) to prevent the coil from rolling. The means of preventing rolling must support the coil off the deck, and must not be capable of becoming unintentionally unfastened or loose while the vehicle is in transit. If timbers, chocks or wedges are used, they must be held in place by coil bunks or similar devices to prevent them from coming loose. The use of nailed blocking or cleats as the sole means to secure timbers, chocks or wedges, or a nailed wood cradle, is prohibited;

(ii) At least one tiedown attached diagonally through its eye from the left side of the vehicle or intermodal container (near the forward-most part of the coil), to the right side of the vehicle or intermodal container (near the rearmost part of the coil), making an angle no more than 45 degrees, whenever practicable, with the floor of the vehicle or intermodal container when viewed from the side of the vehicle or container;

(iii) At least one tiedown attached diagonally through its eye, from the right side of the vehicle or intermodal container (near the forward-most part of the coil), to the left side of the vehicle or intermodal container (near the rearmost part of the coil), making an angle no more than 45 degrees, whenever practicable, with the floor of the vehicle or intermodal container when viewed from the side of the vehicle or container;

(iv) At least one tiedown attached transversely over the top of the coil; and

(v) Either blocking, or friction mats to prevent longitudinal movement.

(2) *An individual coil—option 2.* Each coil must be secured by:

(i) A means (*e.g.*, timbers, chocks or wedges, a cradle, etc.) to prevent the coil from rolling. The means of preventing rolling must support the coil off the deck, and must not be capable of becoming unintentionally unfastened or loose while the vehicle is in transit. If timbers, chocks or wedges are used, they must be held in place by coil bunks or similar devices to prevent them from coming loose. The use of nailed blocking or cleats as the sole means to secure timbers, chocks or wedges, or a nailed wood cradle, is prohibited;

(ii) At least one tiedown attached straight through its eye from the left side of the vehicle or intermodal container (near the forward-most part of the coil), to the left side of the vehicle or intermodal container (near the rearmost part of the coil), and, whenever practicable, making an angle no more

than 45 degrees with the floor of the vehicle or intermodal container when viewed from the side of the vehicle or container;

(iii) At least one tiedown attached straight through its eye, from the right side of the vehicle or intermodal container (near the forward-most part of the coil), to the right side of the vehicle or intermodal container (near the rearmost part of the coil), and whenever practicable, making an angle no more than 45 degrees with the floor of the vehicle or intermodal container when viewed from the side of the vehicle or container;

(iv) At least one tiedown attached transversely over the top of the coil; and

(v) Either blocking or friction mats to prevent longitudinal movement.

(3) *An individual coil—option 3.* Each coil must be secured by:

(i) A means (*e.g.*, timbers, chocks or wedges, a cradle, etc.) to prevent the coil from rolling. The means of preventing rolling must support the coil off the deck, and must not be capable of becoming unintentionally unfastened or loose while the vehicle is in transit. If timbers, chocks or wedges are used, they must be held in place by coil bunks or similar devices to prevent them from coming loose. The use of nailed blocking or cleats as the sole means to secure timbers, chocks or wedges, or a nailed wood cradle, is prohibited;

(ii) At least one tiedown over the top of the coil, located near the forward-most part of the coil;

(iii) At least one tiedown over the top of the coil located near the rearmost part of the coil; and

(iv) Either blocking or friction mats to prevent longitudinal movement.he forward direction.

(4) *Rows of coils.* Each transverse row of coils having approximately equal outside diameters must be secured with:

(i) A means (*e.g.*, timbers, chocks or wedges, a cradle, etc.) to prevent each coil in the row of coils from rolling. The means of preventing rolling must support each coil off the deck, and must not be capable of becoming unintentionally unfastened or loose while the vehicle is in transit. If timbers, chocks or wedges are used, they must be held in place by coil bunks or similar devices to prevent them from coming loose. The use of nailed blocking or cleats as the sole means to secure timbers, chocks or wedges, or a nailed wood cradle, is prohibited;

(ii) At least one tiedown over the top of each coil or transverse row, located near the forward-most part of the coil;

(iii) At least one tiedown over the top of each coil or transverse row, located near the rearmost part of the coil; and

(iv) Either blocking, bracing or friction mats to prevent longitudinal movement.

(e) *Securement of coils transported in a sided vehicle without anchor points or an intermodal container without anchor points.* Metal coils transported in a vehicle with sides without anchor points or an intermodal container without anchor points must be loaded in a manner to prevent shifting and tipping. The coils may also be secured using a system of blocking and bracing, friction mats, tiedowns, or a combination of these to prevent any horizontal movement and tipping.

§ 393.122 What are the rules for securing paper rolls?

(a) *Applicability.* The rules in this section apply to shipments of paper rolls which, individually or together, weigh 2268 kg (5000 lb) or more. Shipments of paper rolls that weigh less than 2268 kg (5000 lb), and paper rolls that are unitized on a pallet, may either be secured in accordance with the rules in this section or the requirements of §§ 393.100 through 393.114.

(b) *Securement of paper rolls transported with eyes vertical in a sided vehicle.* (1) Paper rolls must be placed tightly against the walls of the vehicle, other paper rolls, or other cargo, to prevent movement during transit.

(2) If there are not enough paper rolls in the shipment to reach the walls of the vehicle, lateral movement must be prevented by filling the void, blocking, bracing, tiedowns or friction mats. The paper rolls may also be banded together.

(3) When any void behind a group of paper rolls, including that at the rear of the vehicle, exceeds the diameter of the paper rolls, rearward movement

must be prevented by friction mats, blocking, bracing, tiedowns, or banding to other rolls.

(4)(i) If a paper roll is not prevented from tipping or falling sideways or rearwards by vehicle structure or other cargo, and its width is more than 2 times its diameter, it must be prevented from tipping or falling by banding it to other rolls, bracing, or tiedowns.

(ii) If the forwardmost roll(s) in a group of paper rolls is not prevented from tipping or falling forwards by vehicle structure or other cargo and it is restrained against forward movement by friction mat(s) alone, and its width is more than 1.75 times its diameter, it must be prevented from tipping or falling forwards by banding it to other rolls, bracing, or tiedowns.

(iii) Otherwise, when a paper roll or the forwardmost roll in groups of rolls that are not prevented from tipping or falling forwards by vehicle structure or other cargo and its width exceeds 1.25 times its diameter it must be prevented from tipping or falling by banding it to other rolls, bracing or tiedowns.

(5) If paper rolls are banded together, the rolls must be placed tightly against each other to form a stable group. The bands must be applied tightly, and must be secured so that they cannot fall off the rolls or to the deck.

(6) A friction mat used to provide the principal securement for a paper roll must protrude from beneath the roll in the direction in which it is providing that securement.

(c) *Securement of split loads of paper rolls transported with eyes vertical in a sided vehicle.* (1) If a paper roll in a split load is not prevented from forward movement by vehicle structure or other cargo, it must be prevented from forward movement by filling the open space, or by blocking, bracing, tiedowns, friction mats, or some combination of these.

(2) A friction mat used to provide the principal securement for a paper roll must protrude from beneath the roll in the direction in which it is providing that securement.

(d) *Securement of stacked loads of paper rolls transported with eyes vertical in a sided vehicle.* (1) Paper rolls must not be loaded on a layer of paper rolls beneath unless the lower layer extends to the front of the vehicle.

(2) Paper rolls in the second and subsequent layers must be prevented from forward, rearward or lateral movement by means as allowed for the bottom layer, or by use of a blocking roll from a lower layer.

(3) The blocking roll must be at least 38 mm (1.5 in) taller than other rolls, or must be raised at least 38 mm (1.5 in) using dunnage.

(4) A roll in the rearmost row of any layer must not be raised using dunnage.

(e) *Securement of paper rolls transported with eyes crosswise in a sided vehicle.* (1) The paper rolls must be prevented from rolling or shifting longitudinally by contact with vehicle structure or other cargo, by chocks, wedges or blocking and bracing of adequate size, or by tiedowns.

(2) Chocks, wedges or blocking must be held securely in place by some means in addition to friction, so they cannot become unintentionally unfastened or loose while the vehicle is in transit.

(3) The rearmost roll must not be secured using the rear doors of the vehicle or intermodal container, or by blocking held in place by those doors.

(4) If there is more than a total of 203 mm (8 in) of space between the ends of a paper roll, or a row of rolls, and the walls of the vehicle, void fillers, blocking, bracing, friction mats, or tiedowns must be used to prevent the roll from shifting towards either wall.

(f) *Securement of stacked loads of paper rolls transported with eyes crosswise in a sided vehicle.* (1) Rolls must not be loaded in a second layer unless the bottom layer extends to the front of the vehicle.

(2) Rolls must not be loaded in a third or higher layer unless all wells in the layer beneath are filled.

(3) The foremost roll in each upper layer, or any roll with an empty well in front of it, must be secured against forward movement by:

(i) Banding it to other rolls, or

(ii) Blocking against an adequately secured eye-vertical blocking roll resting on the floor of the vehicle which is

at least 1.5 times taller than the diameter of the roll being blocked, or

(iii) Placing it in a well formed by two rolls on the lower row whose diameter is equal to or greater than that of the roll on the upper row.

(4) The rearmost roll in each upper layer must be secured by banding it to other rolls if it is located in either of the last two wells formed by the rearmost rolls in the layer below.

(5) Rolls must be secured against lateral movement by the same means allowed for the bottom layer when there is more than a total of 203 mm (8 in) of space between the ends of a paper roll, or a row of rolls, and the walls of the vehicle.

(g) *Securement of paper rolls transported with the eyes lengthwise in a sided vehicle.*

(1) Each roll must be prevented from forward movement by contact with vehicle structure, other cargo, blocking or tiedowns.

(2) Each roll must be prevented from rearward movement by contact with other cargo, blocking, friction mats or tiedowns.

(3) The paper rolls must be prevented from rolling or shifting laterally by contact with the wall of the vehicle or other cargo, or by chocks, wedges or blocking of adequate size.

(4) Chocks, wedges or blocking must be held securely in place by some means in addition to friction, so they cannot become unintentionally unfastened or loose while the vehicle is in transit.

(h) *Securement of stacked loads of paper rolls transported with the eyes lengthwise in a sided vehicle.* (1) Rolls must not be loaded in a higher layer if another roll will fit in the layer beneath.

(2) An upper layer must be formed by placing paper rolls in the wells formed by the rolls beneath.

(3) A roll in an upper layer must be secured against forward and rearward movement by any of the means allowed for the bottom layer, by use of a blocking roll, or by banding to other rolls.

(i) *Securement of paper rolls transported on a flatbed vehicle or in a curtain-sided vehicle*—(1) *Paper rolls with eyes vertical or with eyes lengthwise.*

(i) The paper rolls must be loaded and secured as described for a sided vehicle, and the entire load must be secured by tiedowns in accordance with the requirements of §§ 393.100 through 393.114.

(ii) Stacked loads of paper rolls with eyes vertical are prohibited.

(2) *Paper rolls with eyes crosswise.* (i) The paper rolls must be prevented from rolling or shifting longitudinally by contact with vehicle structure or other cargo, by chocks, wedges or blocking and bracing of adequate size, or by tiedowns.

(ii) Chocks, wedges or blocking must be held securely in place by some means in addition to friction so that they cannot become unintentionally unfastened or loose while the vehicle is in transit.

(iii) Tiedowns must be used in accordance with the requirements of §§ 393.100 through 393.114 to prevent lateral movement.

§ 393.124 What are the rules for securing concrete pipe?

(a) *Applicability.* (1) The rules in this section apply to the transportation of concrete pipe on flatbed trailers and vehicles, and lowboy trailers.

(2) Concrete pipe bundled tightly together into a single rigid article that has no tendency to roll, and concrete pipe loaded in a sided vehicle or container must be secured in accordance with the provisions of §§ § 393.100 through 393.114.

(b) *General specifications for tiedowns.* (1) The aggregate working load limit of all tiedowns on any group of pipes must not be less than half the total weight of all the pipes in the group.

(2) A transverse tiedown through a pipe on an upper tier or over longitudinal tiedowns is considered to secure all those pipes beneath on which that tiedown causes pressure.

(c) *Blocking.* (1) Blocking may be one or more pieces placed symmetrically about the center of a pipe.

(2) One piece must extend at least half the distance from the center to each end of the pipe, and two pieces must be placed on the opposite side, one at each end of the pipe.

(3) Blocking must be placed firmly against the pipe, and must be secured

to prevent it moving out from under the pipe.

(4) Timber blocking must have minimum dimensions of at least 10 × 15 cm (4 × 6 in).

(d) *Arranging the load*—(1) *Pipe of different diameter*. If pipe of more than one diameter are loaded on a vehicle, groups must be formed that consist of pipe of only one size, and each group must be separately secured.

(2) *Arranging a bottom tier*. The bottom tier must be arranged to cover the full length of the vehicle, or as a partial tier in one group or two groups.

(3) *Arranging an upper tier*. Pipe must be placed only in the wells formed by adjacent pipes in the tier beneath. A third or higher tier must not be started unless all wells in the tier beneath are filled.

(4) *Arranging the top tier*. The top tier must be arranged as a complete tier, a partial tier in one group, or a partial tier in two groups.

(5) *Arranging bell pipe*. (i) Bell pipe must be loaded on at least two longitudinal spacers of sufficient height to ensure that the bell is clear of the deck.

(ii) Bell pipe loaded in one tier must have the bells alternating on opposite sides of the vehicle.

(iii) The ends of consecutive pipe must be staggered, if possible, within the allowable width, otherwise they must be aligned.

(iv) Bell pipe loaded in more than one tier must have the bells of the bottom tier all on the same side of the vehicle.

(v) Pipe in every upper tier must be loaded with bells on the opposite side of the vehicle to the bells of the tier below.

(vi) If the second tier is not complete, pipe in the bottom tier which do not support a pipe above must have their bells alternating on opposite sides of the vehicle.

(a) *Securing pipe with an inside diameter up to 1,143 mm (45 in)*. In addition to the requirements of paragraphs (b), (c) and (d) of this section, the following rules must be satisfied:

(1) *Stabilizing the bottom tier*. (i) The bottom tier must be immobilized longitudinally at each end by blocking, vehicle end structure, stakes, a locked pipe unloader, or other equivalent means.

(ii) Other pipe in the bottom tier may also be held in place by blocks and/or wedges; and

(iii) Every pipe in the bottom tier must also be held firmly in contact with the adjacent pipe by tiedowns though the front and rear pipes:

(A) At least one tiedown through the front pipe of the bottom tier must run aft at an angle not more than 45 degrees with the horizontal, whenever practicable.

(B) At least one tiedown through the rear pipe of the bottom tier must run forward at an angle not more than 45 degrees with the horizontal, whenever practicable.

(2) *Use of tiedowns*. (i) Each pipe may be secured individually with tiedowns through the pipe.

(ii) If each pipe is not secured individually with a tiedown, then:

(A) Either one 1/2-inch diameter chain or wire rope, or two 3/8-inch diameter chain or wire rope, must be placed longitudinally over the group of pipes;

(B) One transverse tiedown must be used for every 3.04 m (10 ft) of load length. The transverse tiedowns may be placed through a pipe, or over both longitudinal tiedowns between two pipes on the top tier.

(C) If the first pipe of a group in the top tier is not placed in the first well formed by pipes at the front of the tier beneath, it must be secured by an additional tiedown that runs rearward at an angle not more than 45 degrees to the horizontal, whenever practicable. This tiedown must pass either through the front pipe of the upper tier, or outside it and over both longitudinal tiedowns; and

(D) If the last pipe of a group in the top tier is not placed in the last well formed by pipes at the rear of the tier beneath, it must be secured by an additional tiedown that runs forward at an angle not more than 45 degrees to the horizontal, whenever practicable. This tiedown must pass either through the rear pipe of the upper tier or outside it and over both longitudinal tiedowns.

(f) *Securing large pipe, with an inside diameter over 1143 mm (45 in)*. In addition to the requirements of paragraphs (b), (c) and (d) of this section, the following rules must be satisfied:

(1) The front pipe and the rear pipe must be immobilized by blocking, wedges, vehicle end structure, stakes, locked pipe unloader, or other equivalent means.

(2) Each pipe must be secured by tiedowns through the pipe:

(i) At least one tiedown through each pipe in the front half of the load, which includes the middle one if there is an odd number, and must run rearward at an angle not more than 45 degrees with the horizontal, whenever practicable.

(ii) At least one tiedown through each pipe in the rear half of the load, and must run forward at an angle not more than 45 degrees with the horizontal, whenever practicable, to hold each pipe firmly in contact with adjacent pipe; and

(iii) If the front or rear pipe is not also in contact with vehicle end structure, stakes, a locked pipe unloader, or other equivalent means, at least two tiedowns positioned as described in paragraphs (f)(2)(i) and (ii) of this section, must be used through that pipe.

(3) If only one pipe is transported, or if several pipes are transported without contact between other pipes, the requirements in this paragraph apply to each pipe as a single front and rear article.

§ 393.126 What are the rules for securing intermodal containers?

(a) Applicability. The rules in this section apply to the transportation of intermodal containers. Cargo contained within an intermodal container must be secured in accordance with the provisions of §§ 393.100 through 393.114 or, if applicable, the commodity specific rules of this part.

(b) *Securement of intermodal containers transported on container chassis vehicle(s).* (1) Each intermodal container must be secured to the container chassis with securement devices or integral locking devices that cannot unintentionally become unfastened while the vehicle is in transit.

(2) The securement devices must restrain the container from moving more than 1.27 cm (1/2 in) forward, more than 1.27 cm (1/2 in) aft, more than 1.27 cm (1/2 in) to the right, more than 1.27 cm (1/2 in) to the left, or more than 2.54 cm (1 in) vertically.

(3) The front and rear of the container must be secured independently.

(c) *Securement of loaded intermodal containers transported on vehicles other than container chassis vehicle(s).* (1) All lower corners of the intermodal container must rest upon the vehicle, or the corners must be supported by a structure capable of bearing the weight of the container and that support structure must be independently secured to the motor vehicle.

(2) Each container must be secured to the vehicle by:

(i) Chains, wire ropes or integral devices which are fixed to all lower corners; or

(ii) Crossed chains which are fixed to all upper corners; and,

(3) The front and rear of the container must be secured independently. Each chain, wire rope, or integral locking device must be attached to the container in a manner that prevents it from being unintentionally unfastened while the vehicle is in transit.

(d) *Securement of empty intermodal containers transported on vehicles other than container chassis vehicle(s).* Empty intermodal containers transported on vehicles other than container chassis vehicles do not have to have all lower corners of the intermodal container resting upon the vehicle, or have all lower corners supported by a structure capable of bearing the weight of the empty container, provided:

(1) The empty intermodal container is balanced and positioned on the vehicle in a manner such that the container is stable before the addition of tiedowns or other securement equipment; and,

(2) The amount of overhang for the empty container on the trailer does not exceed five feet on either the front or rear of the trailer;

(3) The empty intermodal container must not interfere with the vehicle's maneuverability; and,

(4) The empty intermodal container is secured to prevent lateral, longitudinal, or vertical shifting.

§ 393.128 What are the rules for securing automobiles, light trucks and vans?

(a) *Applicability.* The rules in this section apply to the transportation of

automobiles, light trucks, and vans which individually weigh 4,536 kg. (10,000 lb) or less. Vehicles which individually are heavier than 4,536 kg (10,000 lb) must be secured in accordance with the provisions of § 393.130 of this part.

(b) *Securement of automobiles, light trucks, and vans.*

(1) Automobiles, light trucks, and vans must be restrained at both the front and rear to prevent lateral, forward, rearward, and vertical movement using a minimum of two tiedowns.

(2) Tiedowns that are designed to be affixed to the structure of the automobile, light truck, or van must use the mounting points on those vehicles that have been specifically designed for that purpose.

(3) Tiedowns that are designed to fit over or around the wheels of an automobile, light truck, or van must provide restraint in the lateral, longitudinal and vertical directions.

(4) Edge protectors are not required for synthetic webbing at points where the webbing comes in contact with the tires.

§ 393.130 What are the rules for securing heavy vehicles, equipment and machinery?

(a) *Applicability.* The rules in this section apply to the transportation of heavy vehicles, equipment and machinery which operate on wheels or tracks, such as front end loaders, bulldozers, tractors, and power shovels and which individually weigh 4,536 kg (10,000 lb.) or more. Vehicles, equipment and machinery which is lighter than 4,536 kg (10,000 lb.) may also be secured in accordance with the provisions of this section, with § 393.128, or in accordance with the provisions of §§ 393.100 through 393.114.

(b) *Preparation of equipment being transported.* (1) Accessory equipment, such as hydraulic shovels, must be completely lowered and secured to the vehicle.

(2) Articulated vehicles shall be restrained in a manner that prevents articulation while in transit.

(c) *Securement of heavy vehicles, equipment or machinery with crawler tracks or wheels.* (1) In addition to the requirements of paragraph (b) of this section, heavy equipment or machinery with crawler tracks or wheels must be restrained against movement in the lateral, forward, rearward, and vertical direction using a minimum of four tiedowns.

(2) Each of the tiedowns must be affixed as close as practicable to the front and rear of the vehicle, or mounting points on the vehicle that have been specifically designed for that purpose.

§ 393.132 What are the rules for securing flattened or crushed vehicles?

(a) *Applicability.* The rules in this section apply to the transportation of vehicles such as automobiles, light trucks, and vans that have been flattened or crushed.

(b) *Prohibition on the use of synthetic webbing.* The use of synthetic webbing to secure flattened or crushed vehicles is prohibited.

(c) *Securement of flattened or crushed vehicles.* Flattened or crushed vehicles must be transported on vehicles which have:

(1) Containment walls or comparable means on four sides which extend to the full height of the load and which block against movement of the cargo in the forward, rearward and lateral directions; or

(2)(i) Containment walls or comparable means on three sides which extend to the full height of the load and which block against movement of the cargo in the forward, rearward and the lateral direction for which there is no containment wall or comparable means, and

(ii) A minimum of two tiedowns are required per vehicle stack; or

(3)(i) Containment walls on two sides which extend to the full height of the load and which block against movement of the cargo in the forward and rearward directions, and

(ii) A minimum of three tiedowns are required per vehicle stack; or

(4) A minimum of four tiedowns per vehicle stack.

(5) In addition to the requirements of paragraphs (c)(2), (3), and (4), the following rules must be satisfied:

(i) Vehicles used to transport flattened or crushed vehicles must be equipped with a means to prevent loose

parts from falling from all four sides of the vehicle which extends to the full height of the cargo.

(ii) The means used to contain loose parts may consist of structural walls, sides or sideboards, or suitable covering material, alone or in combinations.

(iii) The use of synthetic material for containment of loose parts is permitted.

§ 393.134 What are the rules for securing roll-on/roll-off or hook lift containers?

(a) *Applicability*. The rules in this section apply to the transportation of roll-on/roll-off or hook lift containers.

(b) *Securement of a roll-on/roll-off and hook lift container*. Each roll-on/roll-off and hook lift container carried on a vehicle which is not equipped with an integral securement system must be:

(1) Blocked against forward movement by the lifting device, stops, a combination of both or other suitable restraint mechanism;

(2) Secured to the front of the vehicle by the lifting device or other suitable restraint against lateral and vertical movement;

(3) Secured to the rear of the vehicle with at least one of the following mechanisms:

(i) One tiedown attached to both the vehicle chassis and the container chassis;

(ii) Two tiedowns installed lengthwise, each securing one side of the container to one of the vehicle's side rails; or

(iii) Two hooks, or an equivalent mechanism, securing both sides of the container to the vehicle chassis at least as effectively as the tiedowns in the two previous items.

(4) The mechanisms used to secure the rear end of a roll-on/roll off or hook lift container must be installed no more than two meters (6 ft 7 in) from the rear of the container.

(5) In the event that one or more of the front stops or lifting devices are missing, damaged or not compatible, additional manually installed tiedowns must be used to secure the container to the vehicle, providing the same level of securement as the missing, damaged or incompatible components.

§ 393.136 What are the rules for securing large boulders?

(a) *Applicability*. (1) The rules in this section are applicable to the transportation of any large piece of natural, irregularly shaped rock weighing in excess of 5,000 kg (11,000 lb.) or with a volume in excess of 2 cubic-meters on an open vehicle, or in a vehicle whose sides are not designed and rated to contain such cargo.

(2) Pieces of rock weighing more than 100 kg (220 lb.), but less than 5,000 kg (11,000 lb.) must be secured, either in accordance with this section, or in accordance with the provisions of §§ 393.100 through 393.114, including:

(i) Rock contained within a vehicle which is designed to carry such cargo; or

(ii) Secured individually by tiedowns, provided each piece can be stabilized and adequately secured.

(3) Rock which has been formed or cut to a shape and which provides a stable base for securement must also be secured, either in accordance with the provisions of this section, or in accordance with the provisions of §§ 393.100 through 393.114.

(b) *General requirements for the positioning of boulders on the vehicle*. (1) Each boulder must be placed with its flattest and/or largest side down.

(2) Each boulder must be supported on at least two pieces of hard wood blocking at least 10 cm × 10 cm (4 inches × 4 inches) side dimensions extending the full width of the boulder.

(3) Hardwood blocking pieces must be placed as symmetrically as possible under the boulder and should support at least three-fourths of the length of the boulder.

(4) If the flattest side of a boulder is rounded or partially rounded, so that the boulder may roll, it must be placed in a crib made of hardwood timber fixed to the deck of the vehicle so that the boulder rests on both the deck and the timber, with at least three well-separated points of contact that prevent its tendency to roll in any direction.

(5) If a boulder is tapered, the narrowest end must point towards the front of the vehicle.

(c) *General tiedown requirements.* (1) Only chain may be used as tiedowns to secure large boulders.

(2) Tiedowns which are in direct contact with the boulder should, where possible, be located in valleys or notches across the top of the boulder, and must be arranged to prevent sliding across the rock surface.

(d) *Securement of a cubic shaped boulder.* In addition to the requirements of paragraphs (b) and (c) of this section, the following rules must be satisfied:

(1) Each boulder must be secured individually with at least two chain tiedowns placed transversely across the vehicle.

(2) The aggregate working load limit of the tiedowns must be at least half the weight of the boulder.

(3) The tiedowns must be placed as closely as possible to the wood blocking used to support the boulder.

(e) *Securement of a non-cubic shaped boulder—with a stable base.* In addition to the requirements of paragraphs (b) and (c) of this section, the following rules must be satisfied:

(1) The boulder must be secured individually with at least two chain tiedowns forming an ''X'' pattern over the boulder.

(2) The aggregate working load limit of the tiedowns must be at least half the weight of the boulder.

(3) The tiedowns must pass over the center of the boulder and must be attached to each other at the intersection by a shackle or other connecting device.

(f) *Securement of a non-cubic shaped boulder—with an unstable base.* In addition to the requirements of paragraphs (b) and (c) of this section, each boulder must be secured by a combination of chain tiedowns as follows:

(1) One chain must surround the top of the boulder (at a point between one-half and two-thirds of its height). The working load limit of the chain must be at least half the weight of the boulder.

(2) Four chains must be attached to the surrounding chain and the vehicle to form a blocking mechanism which prevents any horizontal movement. Each chain must have a working load limit of at least one-fourth the weight of the boulder. Whenever practicable, the angle of the chains must not exceed 45 degrees from the horizontal.

Subpart J—Frames, Cab and Body Components, Wheels, Steering, and Suspension Systems

SOURCE: 53 FR 49402, Dec. 7, 1988, unless otherwise noted.

§ 393.201 Frames.

(a) The frame or chassis of each commercial motor vehicle shall not be cracked, loose, sagging or broken.

(b) Bolts or brackets securing the cab or the body of the vehicle to the frame must not be loose, broken, or missing.

(c) The frame rail flanges between the axles shall not be bent, cut or notched, except as specified by the manufacturer.

(d) Parts and accessories shall not be welded to the frame or chassis of a commercial motor vehicle except in accordance with the vehicle manufacturer's recommendations. Any welded repair of the frame must also be in accordance with the vehicle manufacturer's recommendations.

(e) No holes shall be drilled in the top or bottom rail flanges, except as specified by the manufacturer.

[53 FR 49402, Dec. 7, 1988, as amended at 70 FR 48055, Aug. 15, 2005]

§ 393.203 Cab and body components.

(a) The cab compartment doors or door parts used as an entrance or exist shall not be missing or broken. Doors shall not sag so that they cannot be properly opened or closed. No door shall be wired shut or otherwise secured in the closed position so that it cannot be readily opened. EXCEPTION: When the vehicle is loaded with pipe or bar stock that blocks the door and the cab has a roof exit.

(b) Bolts or brackets securing the cab or the body of the vehicle to the frame shall not be loose, broken, or missing.

(c) The hood must be securely fastened.

(d) All seats must be securely mounted.

(e) The front bumper must not be missing, loosely attached, or protruding beyond the confines of the vehicle so as to create a hazard.

§ 393.205 Wheels.

(a) Wheels and rims shall not be cracked or broken.

(b) Stud or bolt holes on the wheels shall shall not be elongated (out of round).

(c) Nuts or bolts shall not be missing or loose.

§ 393.207 Suspension systems.

(a) *Axles*. No axle positioning part shall be cracked, broken, loose or missing. All axles must be in proper alignment.

(b) *Adjustable axles*. Adjustable axle assemblies shall not have locking pins missing or disengaged.

(c) *Leaf springs*. No leaf spring shall be cracked, broken, or missing nor shifted out of position.

(d) *Coil springs*. No coil spring shall be cracked or broken.

(e) *Torsion bar*. No torsion bar or torsion bar suspension shall be cracked or broken.

(f) *Air suspensions*. The air pressure regulator valve shall not allow air into the suspension system until at least 55 psi is in the braking system. The vehicle shall be level (not tilting to the left or right). Air leakage shall not be greater than 3 psi in a 5-minute time period when the vehicle's air pressure gauge shows normal operating pressure.

(g) *Air suspension exhaust controls*. The air suspension exhaust controls must not have the capability to exhaust air from the suspension system of one axle of a two-axle air suspension trailer unless the controls are either located on the trailer, or the power unit and trailer combination are not capable of traveling at a speed greater than 10 miles per hour while the air is exhausted from the suspension system. This paragraph shall not be construed to prohibit—

(1) Devices that could exhaust air from both axle systems simultaneously; or

(2) Lift axles on multi-axle units.

[53 FR 49402, Dec. 7, 1988, as amended at 70 FR 48055, Aug. 15, 2005]

§ 393.209 Steering wheel systems.

(a) The steering wheel shall be secured and must not have any spokes cracked through or missing.

(b) *Steering wheel lash*. (1) The steering wheel lash shall not exceed the following parameters:

Steering wheel diameter	Manual steering system	Power steering system
406 mm or less (16 inches or less)	51 mm (2 inches)	108 mm (4¼ inches).
457 mm (18 inches)	57 mm (2¼ inches)	121 mm (4¾ inches).
483 mm (19 inches)	60 mm (2⅜ inches)	127 mm (5 inches).
508 mm (20 inches)	64 mm (2½ inches)	133 mm (5¼ inches).
533 mm (21 inches)	67 mm (2⅝ inches)	140 mm (5½ inches).
559 mm (22 inches)	70 mm (2¾ inches)	146 mm (5¾ inches).

(2) For steering wheel diameters not listed in paragraph (b)(1) of this section the steering wheel lash shall not exceed 14 degrees angular rotation for manual steering systems, and 30 degrees angular rotation for power steering systems.

(c) *Steering column*. The steering column must be securely fastened.

(d) *Steering system*. Universal joints and ball-and-socket joints shall not be worn, faulty or repaired by welding. The steering gear box shall not have loose or missing mounting bolts or cracks in the gear box or mounting brackets. The pitman arm on the steering gear output shaft shall not be loose. Steering wheels shall turn freely through the limit of travel in both directions.

(e) *Power steering systems*. All components of the power system must be in operating condition. No parts shall be loose or broken. Belts shall not be frayed, cracked or slipping. The system shall not leak. The power steering system shall have sufficient fluid in the reservoir.

[53 FR 49402, Dec. 7, 1988, as amended at 70 FR 48055, Aug. 15, 2005]

PART 394 [RESERVED]